KYOCERA

TASKalfa 3051ci
TASKalfa 3551ci
TASKalfa 4551ci
TASKalfa 5551ci

SERVICE
MANUAL

Published in May 2014

Rev. 6

CAUTION

RISK OF EXPLOSION IF BATTERY IS REPLACED BY AN INCORRECT TYPE. DISPOSE OF USED BATTERIES ACCORDING TO THE INSTRUCTIONS.

It may be illegal to dispose of this battery into the municipal waste stream. Check with your local solid waste officials for details in your area for proper disposal.

ATTENTION

IL Y A UN RISQUE D’EXPLOSION SI LA BATTERIE EST REMPLACEE PAR UN MODELE DE TYPE INCORRECT. METTRE AU REBUT LES BATTERIES UTILISEES SELON LES INSTRUCTIONS DONNEES.

Il peut être illégal de jeter les batteries dans des eaux d’égout municipales. Vérifiez avec les fonctionnaires municipaux de votre région pour les détails concernant des déchets solides et une mise au rebut appropriée.

Notation of products in the manual

For the purpose of this service manual, products are identified by print speed at A4 and black and white modes.

TASKalfa 3051ci: 30 ppm model
TASKalfa 3551ci: 35 ppm model
TASKalfa 4551ci: 45 ppm model
TASKalfa 5551ci: 55 ppm model

Revision history

Revision	Date	Replaced pages	Remarks
1	May 13, 2013	Contents,1-2-24,1-2-50,1-2-86,1-2-95,1-3-5,1-3-11, 1-3-17,1-3-26,1-3-29,1-3-69,1-3-89,1-3-104,1-3-114 to 1-3-119,1-3-188,1-3-204,1-3-224,1-3-225,1-4-5, 1-4-23,1-4-29,1-4-39,1-4-154,1-4-162,1-4-168, 1-4-191,1-4-195,1-4-275,1-5-13,1-5-30 to 1-5-32, 1-5-39,1-5-55,1-5-58,1-5-77 to 1-5-79,1-5-81, 1-5-106 to 1-5-108,1-6-1,1-6-2,2-1-5 to 2-1-7,2-2-4, 2-2-5,2-2-10, 2-2-11,2-3-68,2-3-69,2-3-74,2-3-83, 2-3-84,2-4-5 to 2-4-7,2-4-15,2-4-18,2-4-19,2-4-25 to 2-4-27,2-4-29,2-4-30	-
2	August 2, 2013	1-1-2,1-1-3,1-2-2,1-2-4,1-2-5,1-2-7,1-2-19 to 1-2-21, 1-3-10,1-3-110,1-3-112,1-3-190,1-3-193,1-3-204, 1-3-219,1-3-228,1-4-26,1-4-89 to 1-4-92,1-5-20, 1-5-58,1-5-80,1-5-106,1-6-2,2-4-6	-
3	October 9, 2013	Contents,1-1-11,1-2-6,1-2-31,1-2-32,1-2-40,1-2-69, 1-2-95,1-2-108,1-3-7,1-3-11,1-3-17,1-3-18,1-3-21, 1-3-26,1-3-27,1-3-30,1-3-74,1-3-76,1-3-110,1-3-122, 1-3-128,1-3-129,1-3-133,1-3-158,1-3-161,1-3-166, 1-3-191,1-3-193,1-3-195,1-3-208,1-3-209,1-3-219, 1-3-225,1-3-227,1-4-3,1-4-63,1-4-137,1-4-180, 1-4-184,1-5-8,1-5-18,1-5-29,1-5-48,1-5-51,1-5-78, 1-5-80,1-5-83,1-6-2,2-3-10,2-3-40 to 2-3-43,2-4-1 to 2-4-10,2-4-14	
4	January 8, 2014	Contents,1-1-2,1-1-5,1-1-18,1-2-5,1-2-95,1-2-118 to 1-2-126,1-3-7,1-3-11,1-3-32,1-3-43,1-3-109 to 1-3-111,1-3-132,1-3-172 to 1-3-178,1-3-184 to 1-3-192,1-3-194,1-3-208 to 1-3-211,1-3-233,1-4-62, 1-4-99,1-4-199 to 1-4-203,1-4-304,1-5-58,1-5-121, 2-2-9,2-2-10,2-3-28,2-4-7,2-4-8,2-4-11,2-4-19 to 2-4-28,2-4-32	-
5	March 19,2014	Contents,1-1-3,1-2-1,1-2-21,1-3-10,1-3-24,1-3-102, 1-3-103,1-3-148,1-3-149,1-3-174,1-3-184,1-3-199, 1-3-225,1-4-10,1-4-200 to 1-4-203,1-4-256,1-4-271, 1-4-272,1-5-78,1-5-119,1-6-1,1-6-2,2-4-12	-
6	May 15,2014	1-2-19,1-3-32,1-3-102,1-3-103,1-3-234,1-4-66, 1-4-196,1-4-271,1-4-272,1-5-84,1-6-1,1-6-2, INSTALLATION GUIDE	-
7	April 28,2015	1-2-71, 1-3-20,1-3-25, 1-3-97, 1-3-162, 1-3-202, 1-3-232, 1-4-157, 1-4-197, 1-4-306 to 1-4-312, 1-5-33 to 1-5-35, 2-3-79, 2-4-10	-

Revision	Date	Pages	Revised contents
8	11 July 2016	1-2-69, 1-2-70	Correction: Position of the wire saddles

This page is intentionally left blank.

Safety precautions

This booklet provides safety warnings and precautions for our service personnel to ensure the safety of their customers, their machines as well as themselves during maintenance activities. Service personnel are advised to read this booklet carefully to familiarize themselves with the warnings and precautions described here before engaging in maintenance activities.

Safety warnings and precautions

Various symbols are used to protect our service personnel and customers from physical danger and to prevent damage to their property. These symbols are described below:

⚠**DANGER:** High risk of serious bodily injury or death may result from insufficient attention to or incorrect compliance with warning messages using this symbol.

⚠**WARNING:** Serious bodily injury or death may result from insufficient attention to or incorrect compliance with warning messages using this symbol.

⚠**CAUTION:** Bodily injury or damage to property may result from insufficient attention to or incorrect compliance with warning messages using this symbol.

Symbols

The triangle (△) symbol indicates a warning including danger and caution. The specific point of attention is shown inside the symbol.

General warning. Warning of risk of electric shock.

Warning of high temperature.

⃠ indicates a prohibited action. The specific prohibition is shown inside the symbol.

General prohibited action. Disassembly prohibited.

● indicates that action is required. The specific action required is shown inside the symbol.

General action required. Remove the power plug from the wall outlet.

Always ground the copier.

1. Installation Precautions

WARNING

- Do not use a power supply with a voltage other than that specified. Avoid multiple connections to one outlet: they may cause fire or electric shock. When using an extension cable, always check that it is adequate for the rated current. .....
- Connect the ground wire to a suitable grounding point. Not grounding the copier may cause fire or electric shock. Connecting the earth wire to an object not approved for the purpose may cause explosion or electric shock. Never connect the ground cable to any of the following: gas pipes, lightning rods, ground cables for telephone lines and water pipes or faucets not approved by the proper authorities. .....

CAUTION:

- Do not place the copier on an infirm or angled surface: the copier may tip over, causing injury. .....
- Do not install the copier in a humid or dusty place. This may cause fire or electric shock. .....
- Do not install the copier near a radiator, heater, other heat source or near flammable material. This may cause fire. .....
- Allow sufficient space around the copier to allow the ventilation grills to keep the machine as cool as possible. Insufficient ventilation may cause heat buildup and poor copying performance. .....
- Always handle the machine by the correct locations when moving it. .....
- Always use anti-toppling and locking devices on copiers so equipped. Failure to do this may cause the copier to move unexpectedly or topple, leading to injury. .....
- Avoid inhaling toner or developer excessively. Protect the eyes. If toner or developer is accidentally ingested, drink a lot of water to dilute it in the stomach and obtain medical attention immediately. If it gets into the eyes, rinse immediately with copious amounts of water and obtain medical attention. .....
- Advice customers that they must always follow the safety warnings and precautions in the copier's instruction handbook. .....

2. Precautions for Maintenance

WARNING

- Always remove the power plug from the wall outlet before starting machine disassembly. .....
- Always follow the procedures for maintenance described in the service manual and other related brochures. .....
- Under no circumstances attempt to bypass or disable safety features including safety mechanisms and protective circuits. .....
- Always use parts having the correct specifications. .....
- Always use the thermostat or thermal fuse specified in the service manual or other related brochure when replacing them. Using a piece of wire, for example, could lead to fire or other serious accident. .....
- When the service manual or other serious brochure specifies a distance or gap for installation of a part, always use the correct scale and measure carefully. .....
- Always check that the copier is correctly connected to an outlet with a ground connection. .....
- Check that the power cable covering is free of damage. Check that the power plug is dust-free. If it is dirty, clean it to remove the risk of fire or electric shock. .....
- Never attempt to disassemble the optical unit in machines using lasers. Leaking laser light may damage eyesight. .....
- Handle the charger sections with care. They are charged to high potentials and may cause electric shock if handled improperly. .....

CAUTION

- Wear safe clothing. If wearing loose clothing or accessories such as ties, make sure they are safely secured so they will not be caught in rotating sections. .....
- Use utmost caution when working on a powered machine. Keep away from chains and belts. .....
- Handle the fixing section with care to avoid burns as it can be extremely hot. .....
- Check that the fixing unit thermistor, heat and press rollers are clean. Dirt on them can cause abnormally high temperatures. .....

- Do not remove the ozone filter, if any, from the copier except for routine replacement. .....
- Do not pull on the AC power cord or connector wires on high-voltage components when removing them; always hold the plug itself. .....
- Do not route the power cable where it may be stood on or trapped. If necessary, protect it with a cable cover or other appropriate item. .....
- Treat the ends of the wire carefully when installing a new charger wire to avoid electric leaks. .....
- Remove toner completely from electronic components. .....
- Run wire harnesses carefully so that wires will not be trapped or damaged. .....
- After maintenance, always check that all the parts, screws, connectors and wires that were removed, have been refitted correctly. Special attention should be paid to any forgotten connector, trapped wire and missing screws. .....
- Check that all the caution labels that should be present on the machine according to the instruction handbook are clean and not peeling. Replace with new ones if necessary. .....
- Handle greases and solvents with care by following the instructions below: .....
  · Use only a small amount of solvent at a time, being careful not to spill. Wipe spills off completely.
  · Ventilate the room well while using grease or solvents.
  · Allow applied solvents to evaporate completely before refitting the covers or turning the power switch on.
  · Always wash hands afterwards.
- Never dispose of toner or toner bottles in fire. Toner may cause sparks when exposed directly to fire in a furnace, etc. .....
- Should smoke be seen coming from the copier, remove the power plug from the wall outlet immediately. .....

3. Miscellaneous

WARNING

- Never attempt to heat the drum or expose it to any organic solvents such as alcohol, other than the specified refiner; it may generate toxic gas. .....
- Keep the machine away from flammable liquids, gases, and aerosols. A fire or an electric shock might occur. .....

This page is intentionally left blank.

CONTENTS

1-1 Specifications

1-1-1 Specifications 1-1-1
1-1-2 Parts names 1-1-15
(1) Machine 1-1-15
(2) Option 1-1-17
(3) Operation panel 1-1-19
1-1-3 Machine cross section 1-1-20

1-2 Installation

1-2-1 Installation environment 1-2-1
1-2-2 Unpacking and installation 1-2-2
(1) Installation procedure 1-2-2
(2) Setting initial copy modes 1-2-22
1-2-3 Installing the key counter (option) 1-2-23
(1) Installing directly on the device 1-2-23
(2) Mounting on the document table 1-2-31
1-2-4 Installing the key card MK-2 (option for japan only) 1-2-40
1-2-5 Installing the KMAS (option for japan only) 1-2-53
1-2-6 Installing the coin vender (option for japan only) 1-2-62
1-2-7 Installing the cassette heater (option) 1-2-67
1-2-8 Installing the gigabit ethernet board (option) 1-2-72
1-2-9 Installing the Wire-less interface kit (option) 1-2-74
1-2-10 Installing the IC card reader holder (option) 1-2-76
1-2-11 Installing the keyboard holder (option) 1-2-87
1-2-12 Installing the Printed Document Guard Kit (option) 1-2-95
1-2-13 Installing the duct unit (option) 1-2-98
1-2-14 Installing the handset (option for Japan only) 1-2-101
(1) Installing directly on the device 1-2-101
(2) Mounting on the document table 1-2-108
1-2-15 Optional Applications 1-2-118
(1) Data Security Kit 1-2-119
(2) Internet FAX Kit 1-2-120
(3) Card Authentication Kit 1-2-124
(4) ThinPrint Option 1-2-125
(5) Emulation Upgrade Kit 1-2-126

1-3 Maintenance Mode

1-3-1 Maintenance mode 1-3-1
(1) Executing a maintenance item 1-3-1
(2) Maintenance modes item list 1-3-2

1-4 Troubleshooting

1-4-1 Paper misfeed detection 1-4-1
(1) Paper misfeed indication 1-4-1
(2) Paper misfeed detection condition 1-4-3
1-4-2 Troubleshooting 1-4-29
(1) First check items 1-4-29
(2) Items and corrective actions relating to the device that will cause paper jam 1-4-33

(3) Paper jam at feeding from cassette 1
Electrical parts that could cause paper jam during paper travelling
at the primary feeding (to regist roller)..... 1-4-42
(4) Paper jam at feeding from cassette 2
Electrical parts that could cause paper jam during paper travelling
at the primary feeding (to regist roller)..... 1-4-44
(5) Paper jam during manual feeding
Electrical parts that could cause paper jam during paper travelling
at the primary feeding (to regist roller)..... 1-4-46
(6) Paper jam at the duplex re-feeding part
Electrical parts that could cause paper jam during paper travelling
at the primary feeding (to regist roller)..... 1-4-49
(7) Electrical parts that could cause paper jam at the Secondary transfer part 1-4-50
(8) Electrical parts that could cause paper jam at the fuser and eject part 1-4-51
(9) Electrical parts that could cause paper jam at the duplex part 1-4-53
(10) Electrical parts that could cause paper jam at the BR (bridge) part 1-4-55
(11) Electrical parts that could cause paper jam at the DF paper entry,
feedshift and subtray left eject part..... 1-4-57
(12) Electrical parts that could cause paper jam at the DF process part 1-4-59
(13) Electrical parts that could cause paper jam at the DF eject tray part 1-4-60
(14) Electrical parts that could cause paper jam at the CF conveying part..... 1-4-61
1-4-3 Self-diagnostic function 1-4-62
(1) Self-diagnostic function 1-4-62
(2) Self diagnostic codes..... 1-4-63
(3) System Error (Fxxxx) Outline 1-4-199
1-4-4 Image formation problems..... 1-4-204
1-4-5 Poor image (due to DP and scanner reading) 1-4-206
(1) No image appears (entirely white)..... 1-4-207
(2) No image appears (entirely black)..... 1-4-210
(3) Image is too light. 1-4-212
(4) The background is colored. 1-4-216
(5) White streaks are printed vertically..... 1-4-219
(6) Black or color streaks appear longitudinally. 1-4-222
(7) Streaks are printed horizontally..... 1-4-226
(8) One side of the print image is darker or brighter than the other. 1-4-229
(9) Black or color dots appear on the image..... 1-4-232
(10) Image is blurred..... 1-4-234
(11) The leading edge of the image is consistently misaligned with the original. 1-4-237
(12) Part of image is missing. 1-4-239
(13) Image is out of focus. 1-4-242
(14) Image center does not align with the original center. 1-4-244
(15) Shifted colors..... 1-4-245
(16) Moire..... 1-4-249
(17) Skewed image 1-4-250
(18) Abnormal image 1-4-252
1-4-6 Poor image (Image rendering problems: Mono-color printer engine)..... 1-4-255
(1) No image appears (entirely white)..... 1-4-257
(2) No image appears (entirely black)..... 1-4-259
(3) Image is too light. 1-4-260
(4) The background is colored. 1-4-262
(5) White streaks are printed vertically..... 1-4-264
(6) Black or color streaks appear longitudinally. 1-4-265
(7) Black, white or color streaks appear horizontally. 1-4-266
(8) Uneven density longitudinally..... 1-4-267

(9) Uneven density horizontally. 1-4-268
(10) Black or color dots appear on the image. 1-4-268
(11) Offset occurs. 1-4-269
(12) Part of Image is missing. 1-4-270
(13) Image is out of focus. 1-4-270
(14) Poor grayscale reproducibility. 1-4-271
(15) Unevenly repeating horizontal streaks in the printed objects.
Colored spots in the printed objects. 1-4-271
(16) Grainy image. 1-4-272
1-4-7 Poor image
(Caused by transferring toner, paper conveying, or fusing : Four-color printer engine) 1-4-273
(1) No image appears (entirely white). 1-4-275
(2) Image is too light. 1-4-276
(3) The background is colored. 1-4-277
(4) White streaks are printed vertically. 1-4-277
(5) Black or color streaks appear longitudinally. 1-4-278
(6) Black, white or color streaks appear horizontally. 1-4-279
(7) Uneven transferring toner. 1-4-280
(8) Black or color dots appear on the image. 1-4-281
(9) Image is blurred (Shifted transferring). 1-4-282
(10) The leading edge of the image is consistently misaligned with the original. 1-4-283
(11) The leading edge of the image is sporadically misaligned with the original. 1-4-283
(12) Paper is wrinkled. 1-4-284
(13) Offset occurs. 1-4-285
(14) Image is partly missing (Outlines objects and white dots). 1-4-286
(15) Fusing is loose. 1-4-287
(16) Image is out of focus. 1-4-288
(17) Image center does not align with the original center. 1-4-288
(18) Dirty paper edges with toner. 1-4-289
(19) Inferior color reproducibility. 1-4-290
(20) Shifted colors. 1-4-291
(21) Dirty reverse side of paper. 1-4-291
1-4-8 Electric problems 1-4-292
1-4-9 Mechanical problems 1-4-300
1-4-10 Send error code 1-4-302
(1) Scan to SMB error codes 1-4-302
(2) Scan to FTP error codes 1-4-303
(3) Scan to E-mail error codes 1-4-304
1-4-11 Error codes 1-4-306
(1) Error code 1-4-306
(2) Table of general classification 1-4-307
(2-1) U004XX error code table: Interrupted phase B 1-4-309
(2-2) U006XX error code table: Problems with the unit 1-4-309
(2-3) U008XX error code table: Page transmission error 1-4-309
(2-4) U009XX error code table: Page reception error 1-4-309
(2-5) U010XX error code table: G3 transmission 1-4-310
(2-6) U011XX error code table: G3 reception 1-4-311
(2-7) U017XX error code table: V.34 transmission 1-4-312
(2-8) U018XX error code table: V.34 reception 1-4-312
1-4-12 Printing System Troubleshooting 1-4-313
(1) List of Erro Code 1-4-313
(2) Remarks on Relay PWB replacement 1-4-316

1-5 Assembly and disassembly

1-5-1 Precautions for assembly and disassembly 1-5-1
(1) Precautions 1-5-1
(2) Drum 1-5-1
(3) Toner 1-5-1
(4) How to tell a genuine Kyocera toner container 1-5-2
1-5-2 Outer covers 1-5-3
(1) Detaching and refitting the rear upper cover 1-5-3
(2) Detaching and refitting the rear lower cover 1-5-3
(3) Detaching and refitting the left upper cover 1-5-4
(4) Detaching and refitting the right lower cover 1-5-5
(5) Detaching and refitting the right middle rear cover or right lower rear cover 1-5-5
(6) Detaching and refitting the right lower front cover 1-5-6
(7) Detaching and refitting the right cover and DU cover assembly 1-5-6
(8) Detaching and refitting the right front cover 1-5-7
(9) Detaching and refitting the fuser IH PWB cover and IH electric wire cover 1-5-8
(10) Detaching and refitting the ISU front cover and ISU right cover 1-5-8
(11) Detaching and refitting the ISU right cover and right upper cover 1-5-9
(12) Detaching and refitting the ISU rear cover 1-5-9
(13) Detaching and refitting the left cover 1-5-10
1-5-3 Paper feed section 1-5-11
(1) Detaching and refitting the primary paper feed unit 1-5-11
(2) Detaching and refitting the forwarding pulley, paper feed pulley and separation pulley. [30 ppm model / 35 ppm model] 1-5-15
(3) Detaching and refitting the forwarding pulley, paper feed pulley and separation pulley. [45 ppm model / 55 ppm model] 1-5-18
(4) Detaching and refitting the MP tray paper feed unit 1-5-21
(5) Detaching and refitting the MP forwarding pulley, MP paper feed pulley and MP separation pulley 1-5-24
1-5-4 Optical section 1-5-29
(1) Detaching and refitting the exposure lamp 1-5-29
(2) Detaching and refitting the scanner wires 1-5-32
(3) Detaching and refitting the ISU 1-5-36
(4) Detaching and refitting the LSU 1-5-43
(5) Color registration adjustment 1-5-49
(6) LSU squareness adjustment 1-5-52
1-5-5 Image formation section 1-5-55
(1) Detaching and refitting the inner unit 1-5-55
(2) Detaching and refitting the developer unit and drum unit 1-5-57
(3) Detaching and refitting the charger roller unit 1-5-59
1-5-6 Transfer section 1-5-60
(1) Detaching and refitting the paper conveying unit 1-5-60
(2) Detaching and refitting the transfer belt unit 1-5-62
(3) Detaching and refitting the cleaning pre brush 1-5-64
(4) Detaching and refitting the transfer roller 1-5-66
1-5-7 Fuser section 1-5-68
(1) Detaching and refitting the fuser unit 1-5-68
(2) Detaching and refitting fuser IH unit 1-5-70
1-5-8 PWBs 1-5-72
(1) Detaching and refitting the main PWB 1-5-72
(2) Remarks on main PWB replacement 1-5-77
(3) Detaching and refitting the engine PWB 1-5-80
(4) Remarks on engine PWB replacement 1-5-82

(5) Error symptom at an erroneous insertion of the engine PWB FFC 1-5-83
(6) Detaching and refitting the power source PWB 1-5-84
(7) Detaching and refitting the high voltage PWB 1 1-5-87
(8) Detaching and refitting the high voltage PWB 2 1-5-88
(9) Detaching and refitting the operation PWB 1-5-89
(10) Detaching and refitting the fuser IH PWB 1-5-95
1-5-9 Drive section 1-5-100
(1) Detaching and refitting the drum drive unit K and the drum drive unit MCY 1-5-100
(2) Detaching and refitting the main drive unit 1-5-105
(3) Detaching and refitting the fuser drive unit, transfer drive unit and feed drive unit 1-5-106
(4) Detaching and refitting the lift motor 1 and 2 1-5-112
1-5-10 Others 1-5-113
(1) Detaching the eject filter 1-5-113
(2) Detaching and refitting the toner filter and left filter [45 ppm model / 55 ppm model] .. 1-5-114
(3) Detaching and refitting the fan filter 1-5-115
(4) Detaching and refitting the transfer belt filter 1-5-116
(5) Detaching and refitting the developer filter [45 ppm model / 55 ppm model] 1-5-117
(6) Detaching and refitting the hard disk unit 1-5-118
(7) Detaching and refitting the eject unit 1-5-120
(8) Direction of installing the principal fan motors 1-5-121
(9) Skewed paper feeding check/adjustment 1-5-122

1-6 Upgrading the firmware
1-6-1 Upgrading the firmware 1-6-1

2-1 Mechanical Construction
2-1-1 Paper feed/conveying section 2-1-1
(1) Cassette paper feed section 2-1-1
(2) MP tray paper feed section 2-1-3
(3) Paper conveying section 2-1-5
2-1-2 Drum section 2-1-8
2-1-3 Developer section 2-1-10
2-1-4 Optical section 2-1-12
(1) Image scanner section 2-1-12
(2) Laser scanner section 2-1-14
2-1-5 Transfer/Separation section 2-1-17
(1) Intermediate transfer unit section 2-1-17
(2) Secondary transfer roller section 2-1-19
2-1-6 Fuser section 2-1-21
2-1-7 Eject/Feedshift section 2-1-23
2-1-8 Duplex conveying section 2-1-25

2-2 Electrical Parts Layout
2-2-1 Electrical parts layout 2-2-1
(1) PWBs 2-2-1
(2) Switches and sensors 2-2-4
(3) Motors 2-2-7
(4) Fan motors 2-2-9
(5) Others 2-2-11

2-3 Operation of the PWBs

2-3-1 Main PWB 2-3-1
2-3-2 Engine PWB 2-3-10
2-3-3 Power source PWB 2-3-36
2-3-4 IH PWB 2-3-40
(1) 120V model 2-3-40
(2) 220-240V model 2-3-42
2-3-5 ISC PWB 2-3-44
2-3-6 Operation PWB 1 2-3-49
2-3-7 Front PWB 2-3-55
2-3-8 Feed PWB 1 2-3-64
2-3-9 Feed PWB 2 2-3-74
2-3-10 Relay PWB 2-3-80
2-3-11 Motor control PWB 2-3-86
2-3-12 LSU relay PWB 2-3-89

2-4 Appendixes

2-4-1 Appendixes 2-4-1
(1) List of maintenance parts 2-4-1
(2) Maintenance kits 2-4-3
(3) Periodic maintenance procedures 2-4-5
(4) Image adjustment after replacing the maintenance kit 2-4-10
(5) Inner Cleaning 2-4-11
(6) Repetitive defects gauge 2-4-12
(7) Firmware environment commands 2-4-13
(8) Timing chart 2-4-19
(9) Chart of image adjustment procedures 2-4-29
(10) Wiring diagram 2-4-31

INSTALLATION GUIDE

DOCUMENT PROCESSOR
PAPER FEEDER
LARGE CAPACITY FEEDER
SIDE DECK
SIDE MULTI TRAY
1000-SHEETS FINISHER
4000-SHEETS FINISHER
FINISHER ATTACHMENT KIT
CENTER-FOLDING UNIT
MAILBOX
PUNCH UNIT
INNER JOB SEPARATOR
100-SHEETS INNER JOB SEPARATOR
RIGHT JOB SEPARATOR
BANNER GUIDE
FAX SYSTEM
DOCUMENT TABLE
PRINTING SYSTEM

1-1-1 Specifications

Common functions

Item		Specifications			
		30 ppm	**35 ppm**	**45 ppm**	**55 ppm**
Type		Desktop			
Printing method		Electrophotography by semiconductor laser, tandem drum system			
Paper weight	**Cassette**	60 to 220 g/m²		60 to 256 g/m²	
	MP tray	60 to 300 g/m²			
Paper type	**Cassette**	Plain, Rough, Vellum, Recycled, Preprinted, Bond, Color (Colour), Prepunched, Letterhead, Thick, High Quality, Custom (Duplex: Same as simplex)			
	MP tray	Plain, Transparency (OHP film), Rough, Vellum, Labels, Recycled, Preprinted, Bond, Cardstock, Color (Colour), Prepunched, Letterhead, Thick, Coated, Envelope, High Quality, Custom			
Paper size	**Cassette 1,2**	A3, B4, A4, A4R, B5, B5R, A5R, Ledger, Legal, Letter, LetterR, StatementR, Oficio II, 12 × 18", Folio, 8K, 16K, 16KR, 216 × 340mm, Size Entry (Metric: X; 182 to 457 mm (in 1 mm increments), Y; 140 to 304 mm (in 1 mm increments), Inch: X; 7.17 to 18.00" (in 0.01" increments), Y; 5.51 to 12.00" (in 0.01" increments))			
	MP tray	A3, B4, A4, A4R, B5, ISO B5, B5R, A5R, B6R, A6R, Return postcard, Postcards, Envelope DL, Envelope C5, Envelope C4, Envelope #10 (Commercial #10), Envelope #9 (Commercial #9), Envelope #6 (Commercial #6 3/4), Envelope Monarch, Youkei 2, Youkei 4, Ledger, Legal, Letter, LetterR, Executive, StatementR, Oficio II, 12 × 18", Folio, 216 × 340mm, 8K, 16K, 16KR, Custom (98 ×148 mm to 304.8 × 1,220 mm)			
Warm-up time (22 °C/71.6 °F, 60% RH)	**Power on**	25 s or less	28 s or less	41 s or less	45 s or less
	Low Power	20 s or less	20 s or less	25 s or less	25 s or less
	Sleep	23 s or less	25 s or less	41 s or less	45 s or less
Paper capacity	**Cassette 1,2**	550 sheets (64 g/m²) 500 sheets (80 g/m²)			
	MP tray	A4/Letter or less 165 sheets (64 g/m²) 150 sheets (80 g/m²) More than A4/Letter 55 sheets (64 g/m²) 50 sheets (80 g/m²)			
Output tray capacity	**Inner tray**	250 sheets (80 g/m²) * : 180 sheets (with 100-sheets inner job separator)			
	with inner job separator	30 sheets (80 g/m²)			
	with 100-sheets inner job separator	100 sheets (80 g/m²)			
	with right job separator	70 sheets (80 g/m²)			

Item		Specifications			
		30 ppm	35 ppm	45 ppm	55 ppm
Light source		LED			
Scanning system		Flat bed scanning by CCD image sensor			
Photoconductor		a-Si (drum diameter 30 mm)			
Image write system		Semiconductor laser			
Charging system		Charger roller			
Developing system		Touch down developing system Developer: 2-component Toner replenishing: Automatic from the toner container			
Transfer system		Primary: Transfer belt Secondary: Transfer roller			
Separation system		Small diameter separation, Separation electrode			
Cleaning system		Drum: Counter blade, Cleaning roller Transfer belt: Fur brush			
Charge erasing system		Exposure by cleaning lamp (LED)			
Fusing system		Belt fusing Heat source: IH Abnormally high temperature protection devices: thermostat			
CPU		Dual Core (Freescale QorIQ P1022) 800MHz		Dual Core (Freescale QorIQ P1022) 1067MHz	
Memory		3.5GB (When the Document Processor (dual scan DP) is installed, 4GB.)			
Hard Disk		160 GB (standard)		320 GB or more(HDD x 2) (standard)	
Interface	**Standard**	USB Interface Connector: 1 (USB Hi-Speed) Network interface: 1 (10 BASE-T/100 BASE-TX/1000 BASE-T) USBPort: 4 (Hi-Speed USB)			
	Option	Fax: 2 Network interface: 1 (10 BASE-T/100 BASE-TX/1000 BASE-T) A maximum of two interface options can be installed. Only one network interface can be installed. When a network interface is installed, only one fax line can be installed.			
Resolution		600 × 600 dpi			
Operating environment	**Temperature**	10 to 32.5 °C/ 50 to 90.5 °F			
	Humidity	15 to 80% RH			
	Altitude	2,500 m/ 8,202 ft or less			
	Brightness	1,500 lux or less			
Dimensions (W × D × H)	**machine only**	25 1/2 × 30 3/16 × 29 13/32 648 × 767 × 747 mm			
	with paper feeder	25 1/2 × 30 3/16 × 48 5/8” 648 × 767 × 1,235 mm			
Space required (W × D) (using MP tray)		36 13/32 × 30 3/16” 925 × 767 mm			
Weight		114.4 kg / 252.2 lb (without toner container)			

Item	Specifications			
	30 ppm	**35 ppm**	**45 ppm**	**55 ppm**
Rated input	120 V AC, 60 Hz, more than 12.0 A 220 to 240 V AC, 50/60 Hz, more than 7.2 A			
Options	Document processor, Original cover, Paper feeder, Large capacity feeder, Side deck, Side multi tray*, Side paper feeder*, Side large capacity feeder*, 1000-sheet finisher, 4000-sheet finisher, Center-folding unit, Mailbox, Punch unit, Inner job separator, 100-sheets inner job separator, Right job separator, Key counter, Fax kit, Expansion memory for Fax, Internet fax kit (A), Data security kit, Printed document guard kit, Emulation option kit, Gigabit ethernet board, Wireless interface board, Printing system, Document table, IC card reader holder, Keyboard holder, Scan Extension kit and Banner Tray *: 45 ppm/55 ppm model only			

Copy functions

Item		Specifications			
		30 ppm	**35 ppm**	**45 ppm**	**55 ppm**
Copying speed	**B/W**	A4 : 30 ppm Letter : 30 ppm A4R : 21 ppm LetterR : 21 ppm A3 : 15 ppm Ledger : 15 ppm B4 : 18 ppm Legal : 18 ppm B5 : 30 ppm B5R : 21 ppm A5R : 15 ppm	A4 : 35 ppm Letter : 35 ppm A4R : 24 ppm LetterR : 24 ppm A3 : 17 ppm Ledger : 17 ppm B4 : 21 ppm Legal : 21 ppm B5 : 35 ppm B5R : 24 ppm A5R : 17 ppm	A4 : 45 ppm Letter : 45 ppm A4R : 31 ppm LetterR : 31 ppm A3 : 22 ppm Ledger : 22 ppm B4 : 27 ppm Legal : 21 ppm B5 : 45 ppm B5R : 27 ppm A5R : 27 ppm	A4 : 55 ppm Letter : 55 ppm A4R : 38 ppm LetterR : 38 ppm A3 : 27 ppm Ledger : 27 ppm B4 : 33 ppm Legal : 21 ppm B5 : 55 ppm B5R : 24 ppm A5R : 24 ppm
	Color	A4 : 30 ppm Letter : 30 ppm A4R : 21 ppm LetterR : 21 ppm A3 : 15 ppm Ledger : 15 ppm B4 : 18 ppm Legal : 18 ppm B5 : 30 ppm B5 : 21 ppm B5 : 15 ppm	A4 : 35 ppm Letter : 35 ppm A4R : 24 ppm LetterR : 24 ppm A3 : 17 ppm Ledger : 17 ppm B4 : 21 ppm Legal : 21 ppm B5 : 35 ppm B5R : 24 ppm A5R : 17 ppm	A4 : 45 ppm Letter : 45 ppm A4R : 24 ppm LetterR : 24 ppm A3 : 22 ppm Ledger : 22 ppm B4 : 27 ppm Legal : 21 ppm B5 : 45 ppm B5R : 24 ppm B5 : 24 ppm	A4 : 50 ppm Letter : 50 ppm A4R : 24 ppm LetterR : 24 ppm A3 : 25 ppm Ledger : 25 ppm B4 : 30 ppm Legal : 21 ppm B5 : 50 ppm B5R : 24 ppm A5R : 24 ppm
First copy time (A4, feed from cassette)	**B/W**	6.2 s or less	5.8 s or less	4.7 s or less	4.4 s or less
	Color	8.1 s or less	7.4 s or less	6.0 s or less	5.7 s or less
Zoom level		Manual mode : 25 to 400%, 1% increments Auto mode : Preset zoom			
Continuous copying		1 to 999 sheets			
Resolution		600 × 600 dpi			
Originals		Sheet, Book, 3-dimensional objects (maximum original size:Leger/ A3)			
Original feed system		Fixed			

Printer functions

Item		Specifications			
		30 ppm	**35 ppm**	**45 ppm**	**55 ppm**
Printing speed	**B/W**	A4 : 30 ppm Letter : 30 ppm A3 : 15 ppm Ledger : 15 ppm	A4 : 35 ppm Letter : 35 ppm A3 : 17 ppm Ledger : 17 ppm	A4 : 45 ppm Letter : 45 ppm A3 : 22 ppm Ledger : 22 ppm	A4 : 55 ppm Letter : 55 ppm A3 : 27 ppm Ledger : 27 ppm
	Color	A4 : 30 ppm Letter : 30 ppm A3 : 15 ppm Ledger : 15 ppm	A4 : 35 ppm Letter : 35 ppm A3 : 17 ppm Ledger : 17 ppm	A4 : 45 ppm Letter : 45 ppm A3 : 22 ppm Ledger : 22 ppm	A4 : 50 ppm Letter : 50 ppm A3 : 25 ppm Ledger : 25 ppm
First print time* (A4, feed from cassette)	**B/W**	7.3 s or less	6.2 s or less	5.4 s or less	4.9 s or less
	Color	9.5 s or less	8.0 s or less	6.6 s or less	6.2 s or less
Resolution		600 x 600 dpi			
Operating system		Windows XP, Windows Server 2003, Windows Vista, Windows 7, Windows 8, Windows Server 2008, Apple Macintosh OS 10.x			
Interface		USB interface connector: 1 (USB Hi-speed) Network interface: 1 (10BASE-T/100BASE-TX/1000BASE-T) Option interface (option): 1 * : Gigabit ethernet board,Wireless interface board			
Page description language		PRESCRIBE			
Emulation		PCL6 (PCL5c, PCL-XL), KPDL3 (PostScript3 compatible), XPS			

* : Excluding time for system stabilization immediately after turning on the main power.

Scanner functions

Item		Specifications			
		30 ppm	35 ppm	45 ppm	55 ppm
System requirements		CPU: Celeron 600 MHz or higher RAM: 300 MB or more			
Resolution		600 dpi, 400 dpi, 300 dpi, 200 dpi, 200 ×100 dpi, 200 × 400 dpi			
File format		PDF (high compressive, encrypted, PDF/A), JPEG, TIFF, XPS			
Scanning speed (A4 landscape, 300 dpi, Image quality: Text/Photo original)*1	Simplex	B/W : 70 images/min Color: 70 images/min		B/W : 80 images/min Color: 80 images/min	
	Duplex	B/W : 100 images/min Color: 100 images/min		B/W : 160 images/min Color: 160 images/min	
Interface		Ethernet (10 BASE-T/100 BASE-TX/1000 BASE-T)			
Network protocol		TCP/IP			
Transmission system		SMB, SMTP, FTP, FTP over SSL, USB, TWAIN scan*2, WIA scan*3, WSD			

*1 When using the dual scan document processor (except TWAIN and WIA scanning)
*2 Available operating system: Windows XP, Windows Server 2003, Windows Vista, Windows Server 2008, Windows 7
*3 Available operating system: Windows Vista, Windows Server 2003, ,Windows Server 2008, Windows Server 2008 R2, Windows 7

Document Processor (Option)

Item		Specifications		
		Document Processor	Document Processor (Dual scan DP)	
Original Feed Method		Automatic feed		
Supported Original Types		Sheet originals		
Paper Size	Maximum	Ledger/A3	Ledger/A3	
	Minimum	Statement-R/A5-R	Statement-R/A6-R	
Paper Weight	1-sided	45 to 160 g/m²	35 to 220 g/m²	35 to 220 g/m² (B6R or less)
	2-sided	50 to 120 g/m²	50 to 220 g/m²	
Loading Capacity		100 sheets (50 to 80 g/m²) maximum When originals have different widths: Mixed original sizes (auto selection): 30 sheets (50 to 80 g/m²) maximum	175 sheets (50 to 80 g/m²) maximum When originals have different widths: Mixed original sizes (auto selection): 30 sheets (50 to 80 g/m²) maximum	
Dimensions (W × D × H)		22 23/32 × 21 13/64 × 7 5/64" 577 × 534 × 180 mm	23 5/8 × 20 13/64 × 6 45/64" 600 × 513 × 170 mm	
Weight		32 lbs. or Less /14.5 kg or less		

Paper Feeder (500-sheet x 2) (Option)

Item		Specifications
Paper Supply Method		Feed & reverse roller method (No. Sheets: 500, 80 g/m², 2 cassettes/No. Sheets: 550, 64 g/m², 2 cassettes)
Paper Size		A3, B4, A4, A4-R, B5, B5-R, A5-R, Ledger, Legal, Oficio II, 12 × 18", Letter, Letter-R,Statement-R, Folio, 8K, 16K, 16K-R, 216 × 340 mm
Supported Paper	**Paper weight**	60 to 256 g/m²
	Media types	Plain, Recycled, Thick, Veiium
Dimensions (W × D × H)		23 35/64 × 27 35/64 × 12 13/32" 598 × 699.6 × 315 mm
Weight		Approx. 66.1 lbs. / Approx. 30 kg

Large Capacity Feeder (1,500-sheet x 2) (Option)

Item		Specifications
Paper Supply Method		Feed & reverse roller method (No. Sheets: 3,000 (80 g/m²)/No. Sheets: 3,500 (64 g/m²))
Paper Size		A4, B5, Letter
Supported Paper	**Paper weight**	60 to 256 g/m²
	Media types	Plain, Recycled, Thick, Veiium
Dimensions (W × D × H)		23 35/64 × 27 52/64 × 12 26/64" 598 × 706.6 × 315 mm
Weight		Approx. 63.93 lbs / Approx. 29 kg

Side Feeder (500-sheet x 3) (Option)

Item		Specifications
Paper Supply Method		Feed & reverse roller method (No. Sheets: 500, 80 g/m², 3 cassettes/No. Sheets: 550, 64 g/m², 3 cassettes)
Paper Size		A3, B4, A4, A4-R, B5-R, A5-R, Ledger, Legal, Oficio II, 12 × 18", Letter, Letter-R, Statement-R, Folio, 8K, 16K, 16K-R, 216 × 340 mm
Supported Paper	**Paper weight**	60 to 256 g/m²
	Media types	Plain, Recycled, Thick, Veiium
Dimensions (W × D × H)		23 35/64 × 28 11/32 × 21 7/64" 598 × 720 × 536 mm
Weight		Approx. 114.6 lbs. / Approx. 52 kg

Large Capacity Side Feeder (500, 1,500-sheet x 2) (Option)

Item		Specifications
Paper Supply Method		Feed & reverse roller method (No. Sheets: 500 sheets (80 g/m²) × 1 cassette, 1,500 sheets (80 g/m²) × 2 cassettes/No. Sheets: 550 sheets (64 g/m²) × 1 cassette, 1,750 sheets (64 g/m²) × 2 cassettes)
Paper Size	**Tray 5**	A3, B4, A4, A4-R, B5-R, A5-R, Ledger, Legal, Oficio II, 12 × 18", Letter, Letter-R, Statement-R, Folio, 8K, 16K, 16K-R, 216 × 340 mm
	Tray 6, 7	A4, B5, Letter
Supported Paper	**Paper weight**	60 to 256 g/m²
	Media types	Plain, Recycled, Thick, Veiium
Dimensions (W × D × H)		23 35/64 × 28 11/32 × 21 7/64" 598 × 720 × 536 mm
Weight		Approx. 112.4 lbs / Approx. 51 kg

Side Feeder (3,000-sheet) (Option)

Item		Specifications
Paper Supply Method		Feed & reverse roller method (No. Sheets: 3,000, 80 g/m^2/No. Sheets: 3,500 64 g/m^2)
Paper Size		A4, B5, Letter
Supported Paper	**Paper weight**	60 to 300 g/m^2
	Media types	Plain, Recycled, Thick, Veiium
Dimensions (W × D × H)		12 41/64 × 24 13/32 × 19 27/32" 321 × 620 × 504 mm
Weight		Approx. 55.1 lbs. / Approx. 25 kg

1,000-sheet Finisher (Option)

Item		Specifications	
Type		Floor model	
Number of trays		Two trays	
Paper weight		45 to 300 g/m²	
Tray capacity	**Main Try (Try A) When not stapling**	A3, B4, Ledger, Legal, Oficio II, Folio, 8K, 16K-R, 216 × 340 mm, Statement-R, Executive, Foolscap, A3 Wide (310 ×433 mm), Ledger Wide (310 ×440 mm), 12 × 18", Custom (98 × 148 mm to 297 × 432 mm): 500 sheets A4, A4R, B5, A5R, B5R, B6R,Letter, LetterR,16K: 1,000 sheets	
	Sub Try left (Try B)	A3, B4, A4, A4R, B5, B5 (ISO), B5R, A5R, A6, B6R, Letter, Letter R, Ledger,Legal, Oficio II, 12 × 18", Statement R, Folio, 8K, 16K, 16K-R, 216 × 340 mm, Oufuku hagaki, Cardstock, Envelope DL, Envelope C5, Envelope C4, Envelope #10 (Commercial #10), Envelope #9 (Commercial #9), Envelope #6 (Commercial #6 3/4), Envelope Monarch, Youkei 2, Youkei 4, Statement-R, Executive, Foolscap, A3 Wide (310 ×433 mm), Ledger Wide (310 ×440 mm), 13 × 19", Custom (98 × 148mm to 297 × 432mm): 100 sheets	
Supported Paper Weight		Stapling: 90 g/m² or less	
Stapling	**Number of Sheets**	A3, B4, B5R, Ledger, Legal, Oficio II, 12 × 18", 216 × 340 mm, Folio, 8K,16K-R	30 sheets (52 to 90 g/m²) 20 sheets (91 to 105 g/m²) 2 cover sheet only (106 g/m² to 256 g/m²)
		A4, A4R, B5, Letter, Letter R, 16K	50 sheets (52 to 90 g/m²) 40 sheets (91 to 105 g/m²) 2 cover sheet only (106 g/m² to 256 g/m²)
	Media types	Plain, Recycled, Prepunched, Preprinted, Bond, Letterhead, Color (Colour), Vellum, Thick, High Quality, Rough, Transparency (OHP film), Labels, Envelope, Cardstock, Coated, Custom	
Power source		Electrically connected to the machine	
Dimensions (W × D × H)		26 7/32 × 24 11 × 32 × 42 5/8" 666 × 618.5 × 1,083 mm	
Weight		Approx. 66.1 lb or less/ Approx. 30 kg or less	

4,000-sheet Finisher (Option)

Item		Specifications	
Type		Floor model	
Number of trays		Three tray	
Paper weight		45 to 300 g/m²	
Tray capacity	**Main Try (Try A) When not stapling**	A3, B4, B5R,Ledger, Legal, 12 × 18", 8K: 1500 sheets A4, A4R, B5, Letter, LetterR,16K,16KR,Folio, Custom (98 × 148 mm to 297 × 432 mm): 4000 sheets ***** A5R, B6R,Statement R: 500 sheets	
	Sub Try left (Try B)	A4, A4R, B5, B5R, A5, A5R, Folio, Ledger, Legal, 12 × 18", A3, B4, 8K, Letter, 13 × 19", Letter R, Statement-R, 16K, 16K-R, Custom (98 × 148 mm to 297 × 432 mm):200 sheets	
	Sub Try right (Try C)	A4, B5, B5 (ISO), B5R, B6, A5, A5R, A6, A6R, Letter, Statement R, 16K, 12 × 18", Cardstock, Oufuku hagaki, Custom (98 × 148 mm to 297 × 432 mm):100 sheets	
Stapling	**Maximum Number**	A3, B4, B5R, Ledger, Legal, Oficio II, 12 × 18", 216 × 340 mm, Folio, 8K,16KR	30 sheets (52 to 90 g/m²) 20 sheets (91 to 105 g/m²) 2 cover sheet only (106 g/m² to 256 g/m²)
		A4, A4R, B5, Letter, Letter R, 16K	70 sheets (52 to 74 g/m²) 65 sheets (75 to 90 g/m²) 55 sheets (91 to 105 g/m²) 2 cover sheet only (106 g/m² to 256 g/m²)
	Media types	Plain, Recycled, Prepunched, Preprinted, Bond, Letterhead, Color (Colour), Vellum, Thick, High Quality, Rough, Transparency (OHP film), Labels, Envelope, Cardstock, Coated, Custom	
Power source		Electrically connected to the machine	
Dimensions (W × D × H)		607.2 ×668.5 ×1061.3 mm 23 29/32 × 26 5/16 × 41 25/32”	
Weight		Approx. 40 kg / Approx. 88.2 lb or less	

* : ***** when the center-folding unit installed,3000 sheets.

Punch unit (option)

Item		Specifications
Paper size	**When not stapling**	A3, B4, A4, A4R, B5, B5R, A5R, Folio, Legal, Letter, Letter R, 12 × 18", Statement R, 12 × 18", 8K, 16K,16K-R
Paper weight		45 to 300 g/m²
Media types (1000, /4000-sheets finisher)		Plain, Transparency, Preprinted, Bond, Recycled,Rough, Letterhead, Color (Colour), Prepunched,Thick, Coated, High Quality, Custom

Mail box (option)

Item	Specifications
Number of trays	7 trays
Paper size (80 g/m²)	A3, B4, Ledger: 50 sheets A4, A4R, B5, B5R, A5R, Legal, Letter, Letter R, 216 × 340 mm, Executive, Folio, Foolscap, 8K,16K, 16K-R, Statement R, Oficio II: 100 sheets
Dimensions (W × D × H)	510 x 400 x 470 mm 20 1/16” x 15 3/4” x 18 1/2”
Weight	Approx. 10 kg or less/22 lbs

Center-folding unit (option)

Item		Specifications
Sizes	**Bi-Fold**	A3, B4, A4R, Ledger, Legal, Letter R, Oficio II, 8K
	Saddle Stitch	A3, B4, A4R, Ledger, Legal, Letter R, Oficio II, 8K
	Tri-Fold	A4R, Letter R
Number of sheets	**Bi-Fold**	5 sheets (60 to 90 g/m²) 3 sheets (91 to 120 g/m²) 1 sheet (121 to 256 g/m²)
	Saddle Stitch	16 sheets (60 to 90 g/m²) 13 sheets (91 to 105 g/m²) 1 cover sheet only (106 to 256 g/m²)
	Tri-Fold	5 sheets (60 to 90 g/m²) 3 sheets (91 to 120 g/m²)
Maximum number for storage (80 g/m²)	**Bi-Fold**	5 sheets or less per set: 30 sets or more 6 to 10 sheets per set: 20 sets or more 11 to 16 sheets per set: 10 sets or more.
	Saddle Stitch	5 sheets or less per set: 30 sets or more 6 to 10 sheets per set: 20 sets or more 11 to 16 sheets per set: 10 sets or more.
	Tri-Fold	1 sheet per set: 30 sets or more 2 to 5 sheets per set: 5 sets or more.
Media types	**Bi-Fold**	Plain, Recycled, Thick, Coated
	Saddle Stitch	Plain, Recycled, Thick, Coated
	Tri-Fold	Plain, Recycled, Thick

Inner Job Separator (Option)

Item		Specifications
Number of trays		1 tray
Maximum Sheets		30 sheets (80 g/m^2)
Paper Size		A3, B4, A4, A4-R, B5, B5-R, A5-R, Folio, Ledger, Legal, Letter, Letter-R, Executive, Executive-R, Foolscap, Oficio II, Statement-R, 8K, 16K, 16K-R, 216 × 340 mm
Supported Paper	**Paper weight**	60 to 256 g/m^2
	Media types	Plain, Preprinted, Bond, Recycled,Rough, Letterhead, Color (Colour), Pre-punched,Thick, Coated, High Quality, Custom
Dimensions (W × D × H)		17 7/16 × 15 7/16 × 4 1/64" 443 × 392 × 102 mm
Weight		Approx. 1.76 lbs. / Approx. 0.8 kg

100-sheets Inner Job Separator (Option)

Item		Specifications
Number of trays		1 tray
Maximum Sheets		100 sheets (80 g/m^2)
Paper Size		A3, B4, A4, A4-R, B5, B5-R, A5-R, Folio, Ledger, Legal, Letter, Letter-R, Executive, Executive-R, Foolscap, Oficio II, Statement-R, 8K, 16K, 16K-R, 216 × 340 mm
Supported Paper	**Paper weight**	60 to 256 g/m^2
	Media types	Plain, Preprinted, Bond, Recycled,Rough, Letterhead, Color (Colour), Pre-punched,Thick, Coated, High Quality, Custom
Dimensions (W × D × H)		18 1/2 × 17 43/64 × 4 1/64" 470 × 449 × 102 mm
Weight		Approx. 4.63 lbs. / Approx. 2.1 kg

Right Job Separator (Option)

Item		Specifications
Number of trays		1 tray
Maximum Sheets		A4, A4-R, B5, Letter, Letter-R, B5-R, A5-R, Executive, Executive-R, Statement-R, 16K, 16K-R,: 70 sheets (80 g/m^2) A3, B4, Folio, Ledger, Legal, Foolscap, Oficio II,16K, 8K, 216 × 340mm : 30 sheets (80 g/m^2)
Paper Size		A3, B4, A4, A4-R, B5, B5-R, A5-R, Folio, Ledger, Legal, Letter, Letter-R, Executive, Executive-R, Foolscap, Oficio II, Statement-R, 8K, 16K, 16K-R, 216 × 340 mm
Supported Paper	**Paper weight**	60 to 256 g/m^2
	Media types	Plain, Preprinted, Bond, Recycled,Rough, Letterhead, Color (Colour), Pre-punched,Thick, Coated, High Quality, Custom
Dimensions (W × D × H)		14 27/32 × 17 13/32 × 5 29/32" 377 × 442 × 150 mm
Weight		Approx. 5.1 lbs. / Approx. 2.3 kg

Banner Tray (Option)

Item		Specifications
Max. number of sheets		10 sheets (Multi Purpose tray)
Paper length		210 (8.26") to 304.8 (12") mm
Paper weight		Max. 1220 (48 1/64") mm
Paper Type	**Paper weight**	136 to 163 g/m^2
	Media types	Heavy 2
Dimensions (W × D × H)		9 27/32 × 14 23/32 × 5 63/64" 250 × 374 × 152 mm
Weight		Approx. 0.78 lbs. / Approx. 0.352 kg

NOTE: These specifications are subject to change without notice.

1-1-2 Parts names

(1) Machine

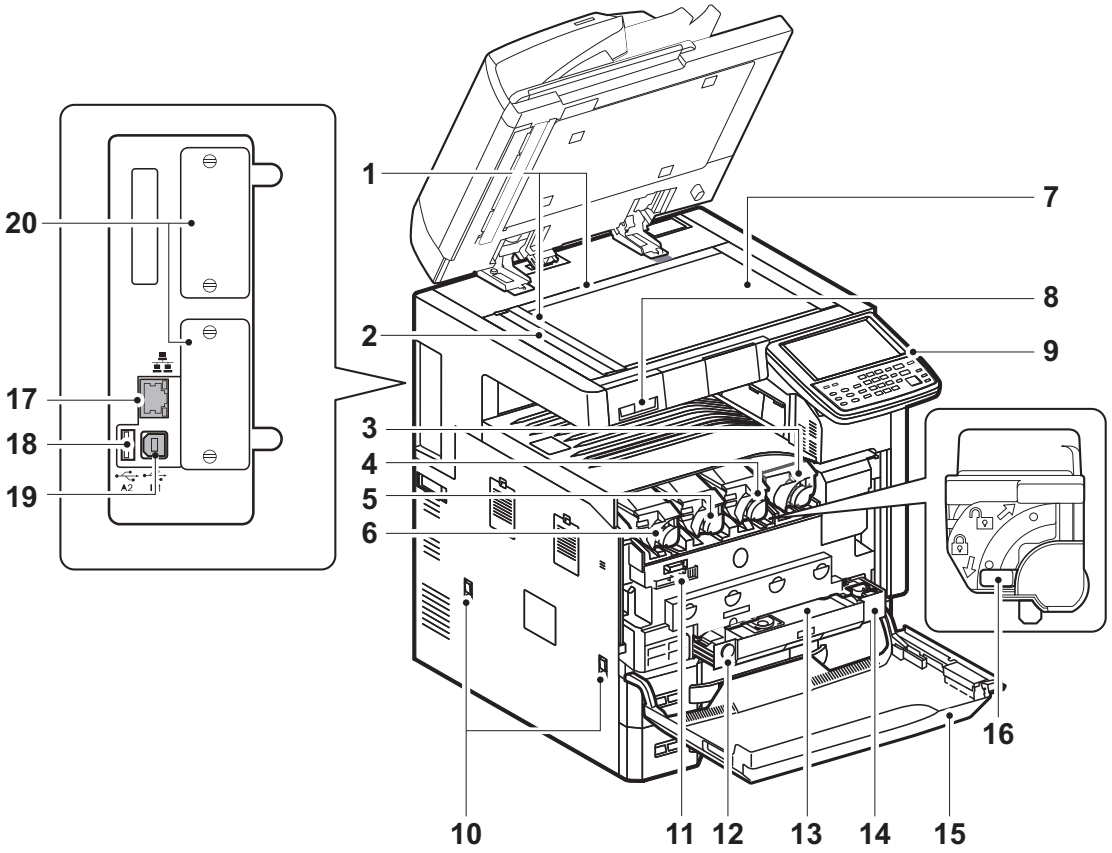

Figure 1-1-1

1. Original size indicator plate
2. Slit glass
3. Toner container K
4. Toner container M
5. Toner container C
6. Toner container Y
7. Platen (Contact glass)
8. Clip holder
9. Operation panel
10. Handles
11. Cleaning Brush
12. Release button
13. Waste toner box
14. Waste toner tray
15. Front cover
16. Toner container release lever
17. Network interface connector
18. USB port (A2)
19. USB interface connector (B1)
20. Option interface

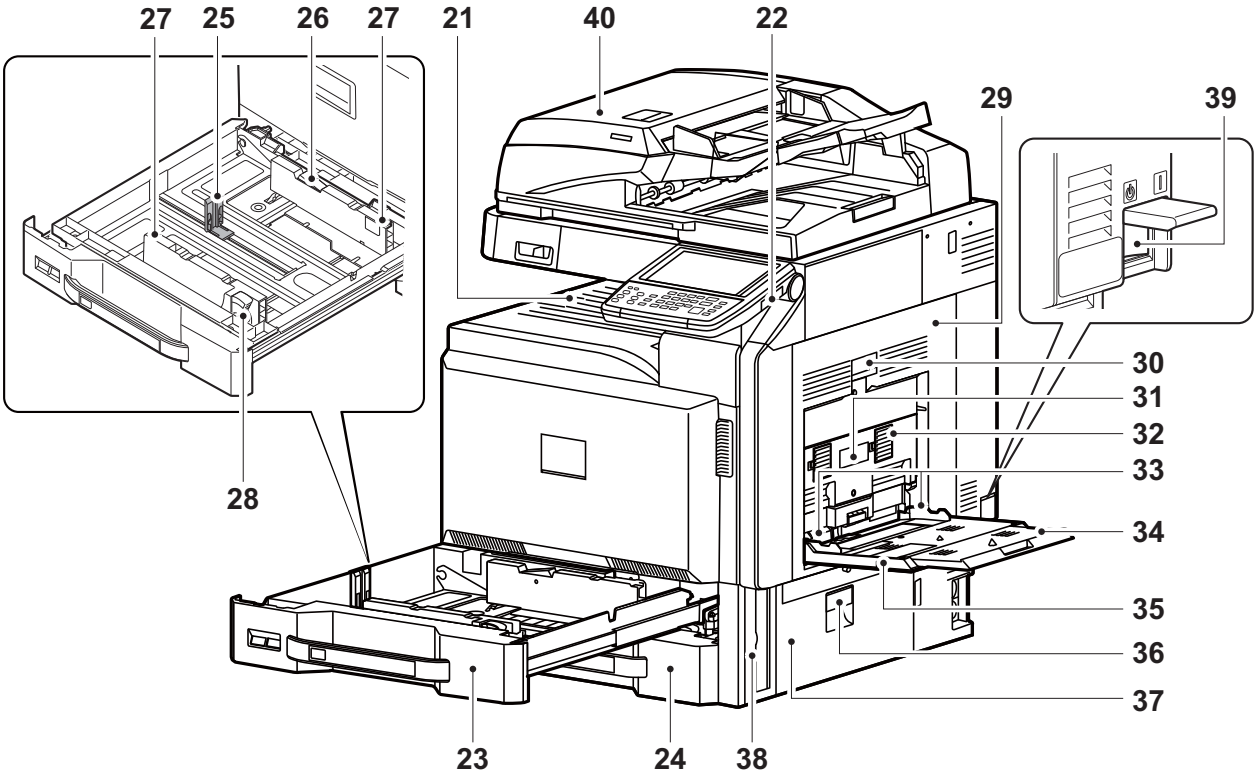

Figure 1-1-2

21. Inner tray
22. USB port
23. Cassettes 1
24. Cassettes 2
25. Paper length guide
26. Guide lock lever
27. Paper width guide
28. Paper width adjusting tab
29. Paper conveying unit
30. Paper conveying unit lever
31. Duplex cover lever
32. Duplex cover
33. MP paper width guide
34. MP support Tray
35. MP (Multi-Purpose) tray
36. Paper conveying cover lever
37. Paper conveying cover
38. Handle
39. Main power switch
40. Document processor (option)

(2) Option

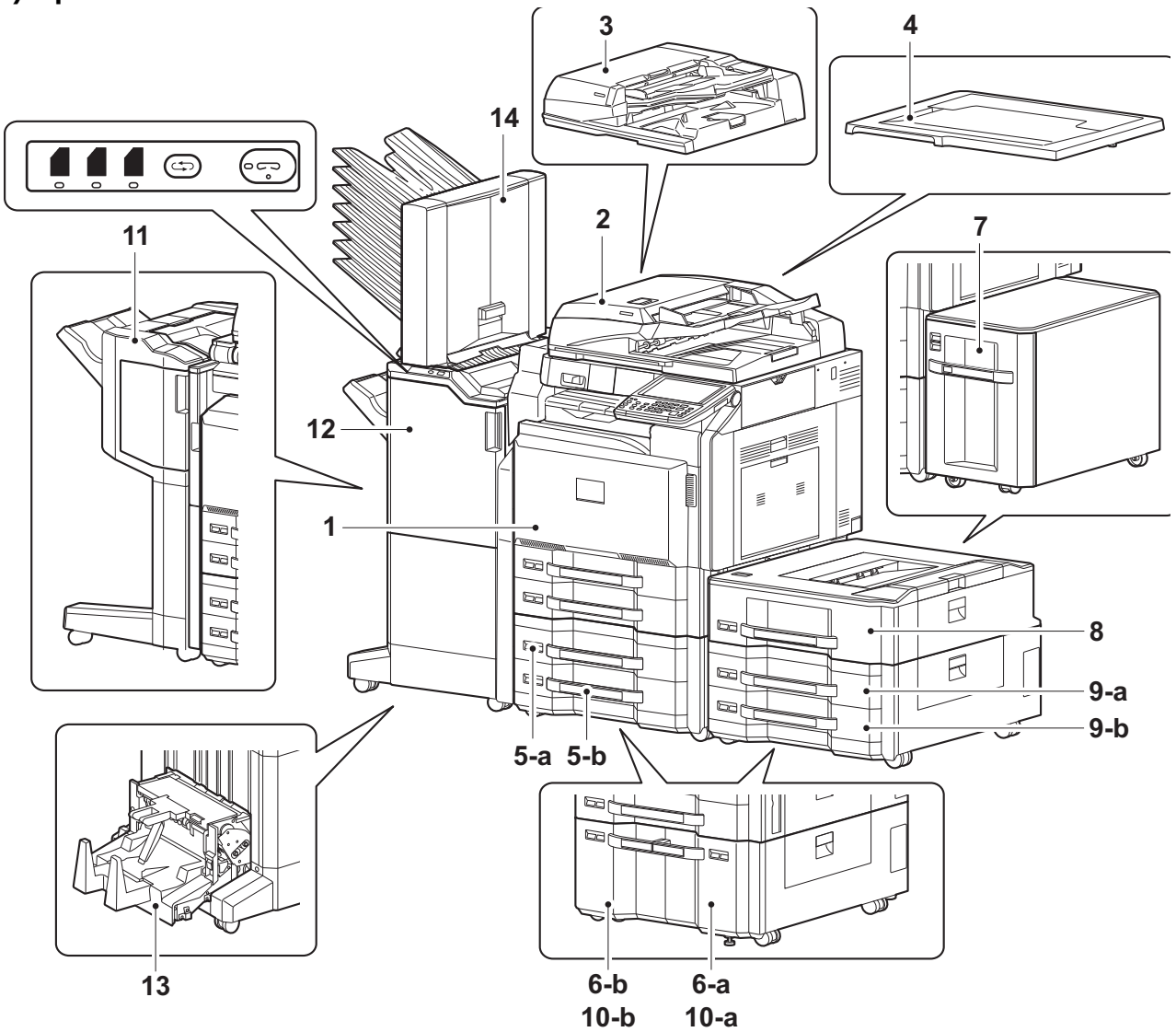

Figure 1-1-3

1. Machine
2. Document processor (dual scan DP)
3. Document processor (reversed DP)
4. Original cover
5. Paper feeder
   a: Cassette 3
   b: Cassette 4
6. Large capacity feeder
   a: Cassette 3
   b: Cassette 4
7. Side deck
   Cassette 5
8. Side multi tray
   Cassette 5
9. Side paper feeder
   a: Cassette 6
   b: Cassette 7
10. Side large capacity feeder
    a: Cassette 6
    b: Cassette 7
11. 1000-sheet finisher
12. 4000-sheet finisher
13. Center-folding unit
14. Mailbox

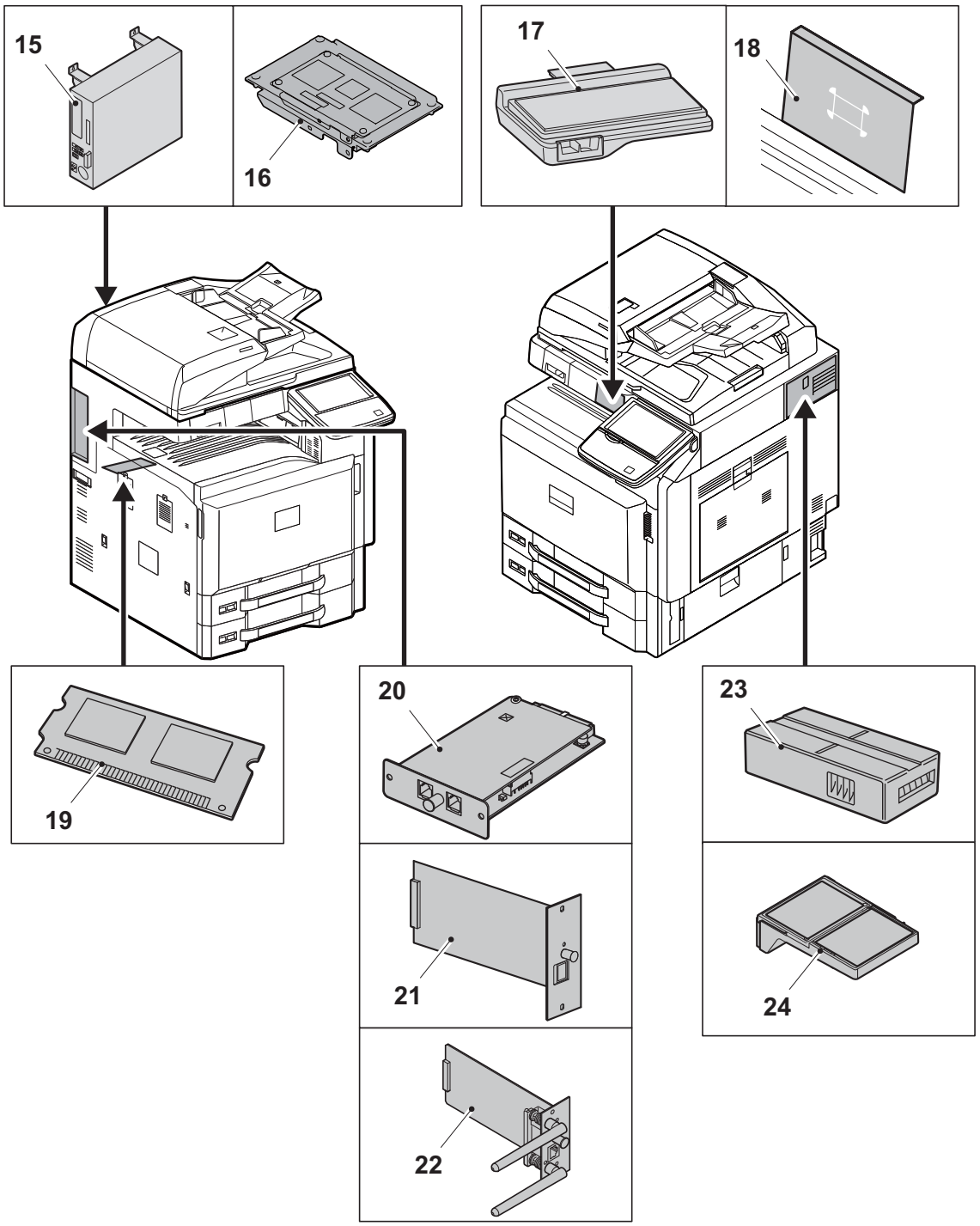

Figure 1-1-4

15. Printing system
16. Printed document guard kit
17. Keyboard holder
18. IC card reader holder
19. Expansion memory for Fax
20. Fax kit
21. Gigabit ethernet board
22. Wire-less interface kit
23. Key counter
24. Document table

Software option

1. Data Security Kit
2. Internet FAX Kit
3. Card Authentication Kit
4. ThinPrint Option
5. Emulation Upgrade Kit
6. Scan extension kit

(3) Operation panel

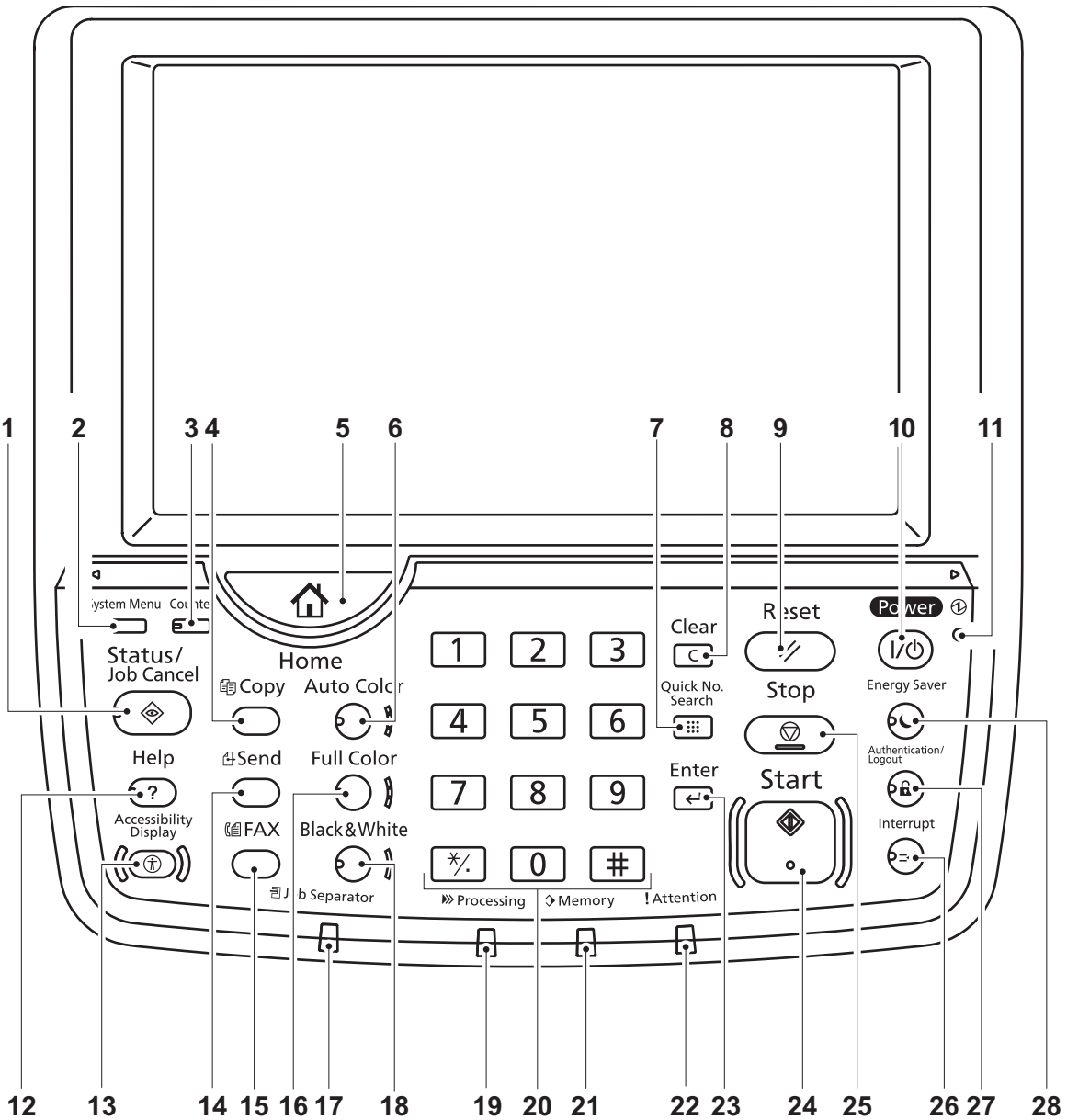

Figure 1-1-5

1. Status/Job cancel key
2. System menu key
3. Counter key
4. Copy key
5. Home key
6. Auto color key
7. Quick no. search key
8. Clear key
9. Reset key
10. Power key
11. Main power indicator
12. Help key
13. Accessibility display key
14. Send key
15. FAX key
16. Full color key
17. Jobseparetor indicator
18. Black and White key
19. Processing indicator
20. Numeric keys
21. Memory indicator
22. Attention indicator
23. Enter key
24. Start key
25. Stop key
26. Interrupt key
27. Authentication/Logout key
28. Energy saver key

1-1-3 Machine cross section

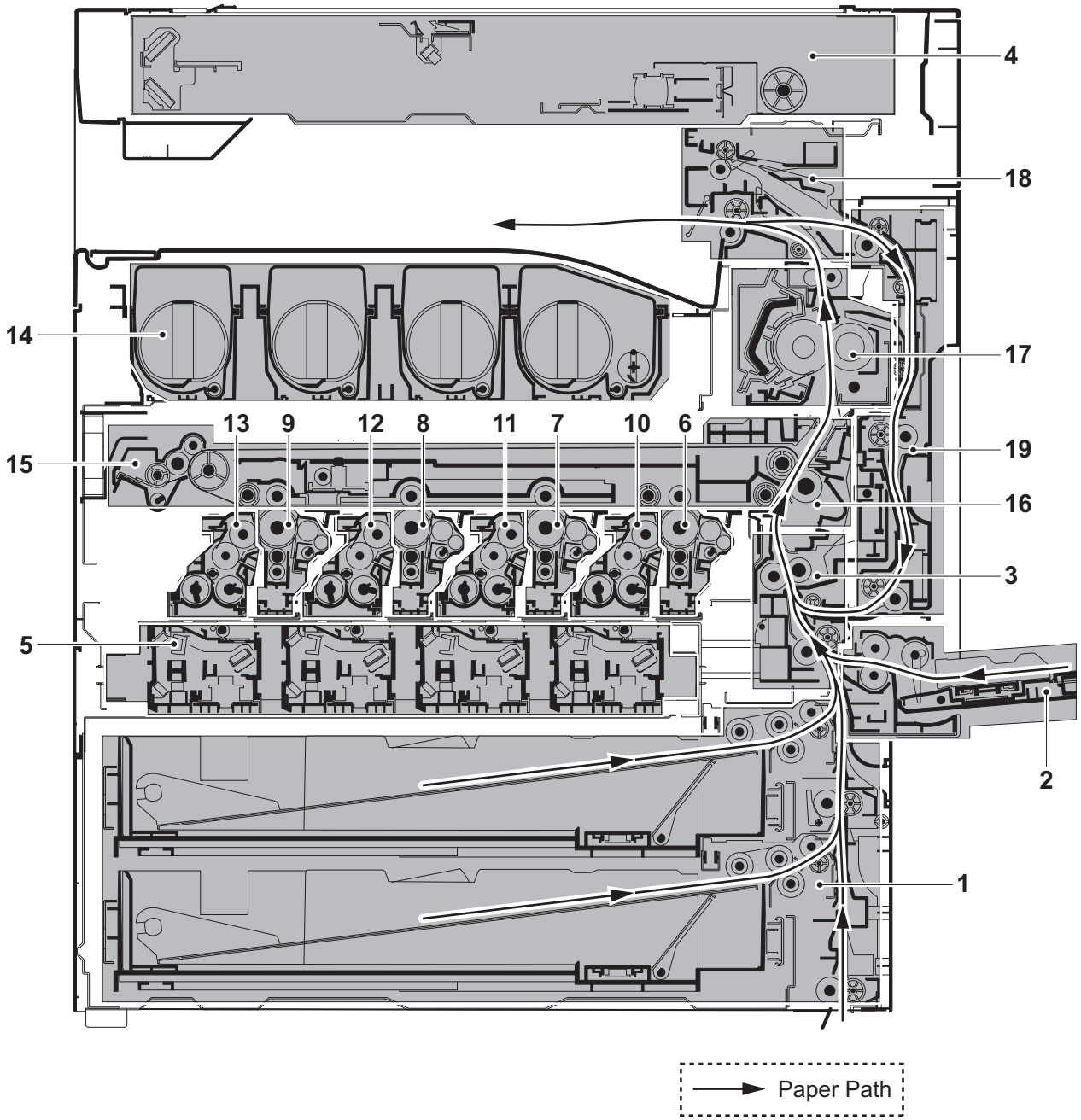

Figure 1-1-6

1. Cassette paper feed section
2. MP tray paper feed section
3. Paper conveying section
4. Optical section
5. Laser scanner unit
6. Drum unit K
7. Drum unit M
8. Drum unit C
9. Drum unit Y
10. Developer unit K
11. Developer unit M
12. Developer unit C
13. Developer unit Y
14. Toner container section
15. Primary transfer section
16. Secondary transfer/Separation sections
17. Fuser section
18. Eject/Feed shift sections
19. Duplex section

1-2-1 Installation environment

1. Temperature: 10 to 32.5°C/50 to 90.5°F
   (But humidity should be 70% or less when temperature is 90.5 °F (32.5 °C).)
2. Humidity: 15 to 80% RH
   (But temperature should be 86 °F (30 °C) or less when humidity is 80%.)
   *: Use coated paper at a temperature of 80.6 °F (27°C) or less and a humidity of 60% or less.
   *: Adverse environmental conditions may affect the image quality. It is recommended to use the machine at a temperature:around 60.8 to 80.6 °F or less (16 to 27 °C), humidity: around 36 to 65%. In addition, Avoid the following locations when selecting a site for the machine.
   The machine automatically detects and displays the following message when the environmental temperature is too high or too low.
   Message: "Warning for high temperature. Adjust the room temperature." or "Warning for low temperature. Adjust the room temperature."
   To use the machine under optimum conditions, adjust the temperature and the humidity of your room if the message is displayed.
3. Power supply: 120 V AC, 15.0 A 220 - 240 V AC, 10.0 A
4. Power source frequency: 50 Hz ± 2%/60 Hz ± 2%
5. Installation location
   Avoid direct sunlight or bright lighting. Ensure that the photoconductor will not be exposed to direct sunlight or other strong light when removing paper jams.
   Avoid locations subject to high temperature and high humidity or low temperature and low humidity; an abrupt change in the environmental temperature; and cool or hot, direct air.
   Avoid places subject to dust and vibrations.
   Choose a surface capable of supporting the weight of the machine.
   Place the machine on a level surface (maximum allowance inclination: 1°).
   Avoid air-borne substances that may adversely affect the machine or degrade the photoconductor, such as mercury, acidic of alkaline vapors, inorganic gasses, NOx, SOx gases and chlorine-based organic solvents.
   Select a well-ventilated location.
   *: If the floor is delicate against casters, when this machine is moved after installation, the floor material may be damaged.
   *: During copying, some ozone is released, but the amount does not cause any ill effect to one's health. If, however, the machine is used over a long period of time in a poorly ventilated room or when making an extremely large number of copies, the smell may become unpleasant.
   To maintain the appropriate environment for copy work, it is suggested that the room be properly ventilated.
6. Allow sufficient access for proper operation and maintenance of the machine.
   Machine front : 100 cm/39 3/8" Machine rear: 10 cm/ 3 15/16"
   Machine right : 35 cm/13 3/4" Machine left: 30 cm/11 13/16" Machine top: 40 cm/15 3/4"

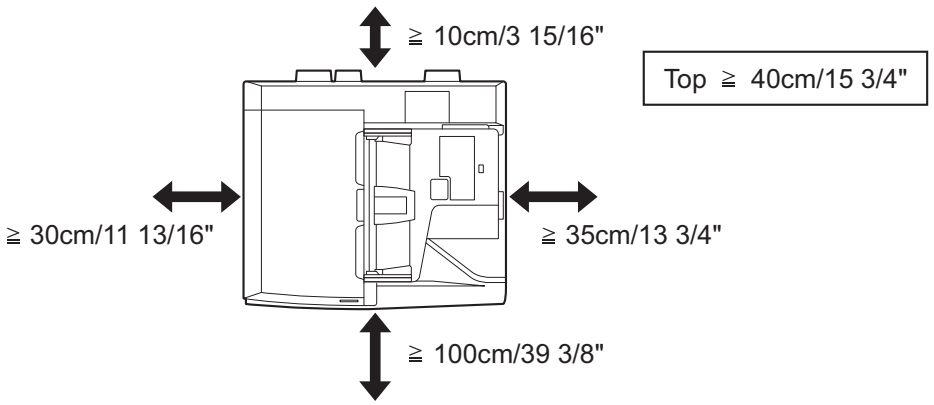

Figure 1-2-1

1-2-2 Unpacking and installation

(1) Installation procedure

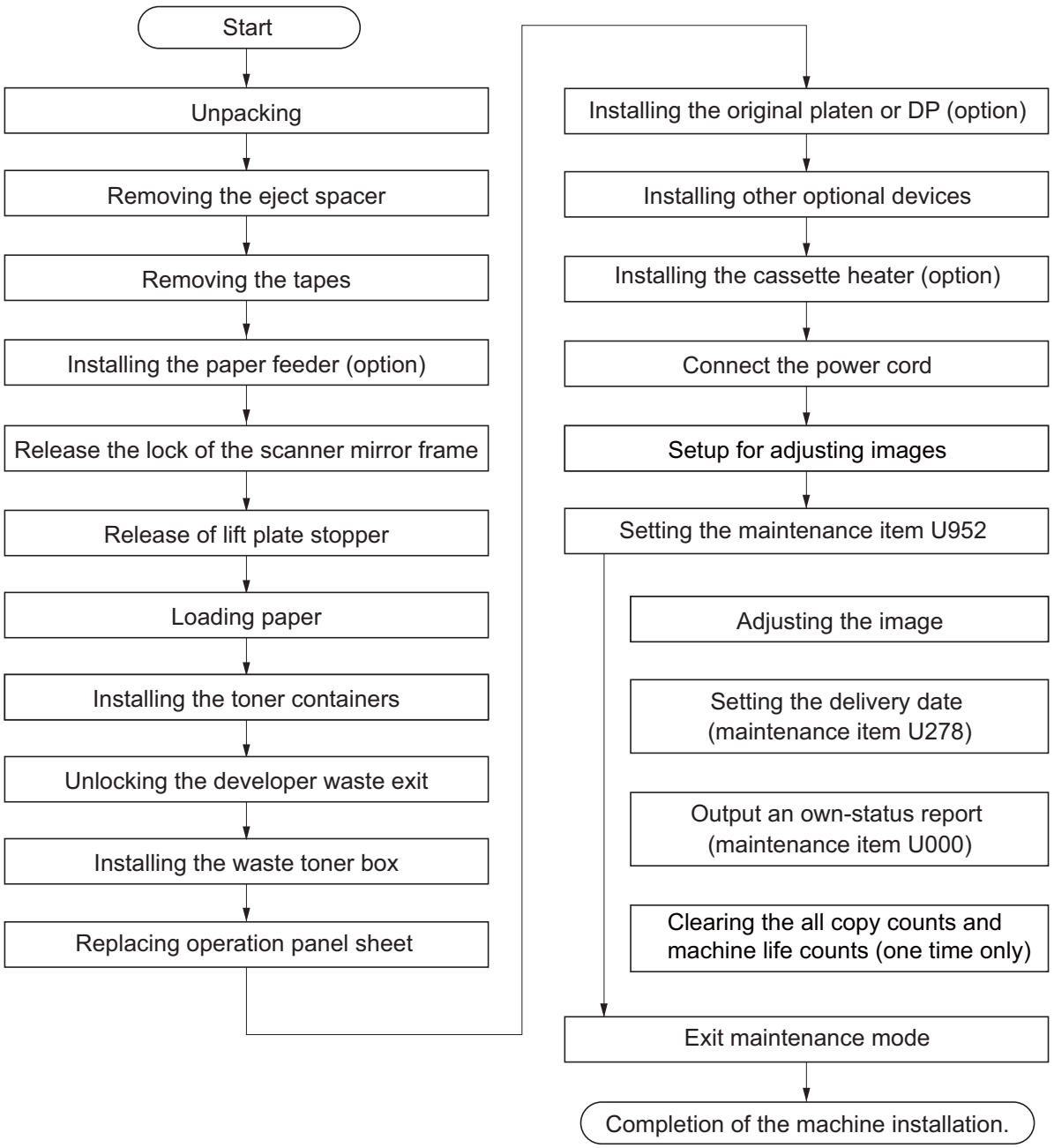

Moving the machine

When moving the machine, pull out three carrying handles, and move with carrying handles and the hand-hold.

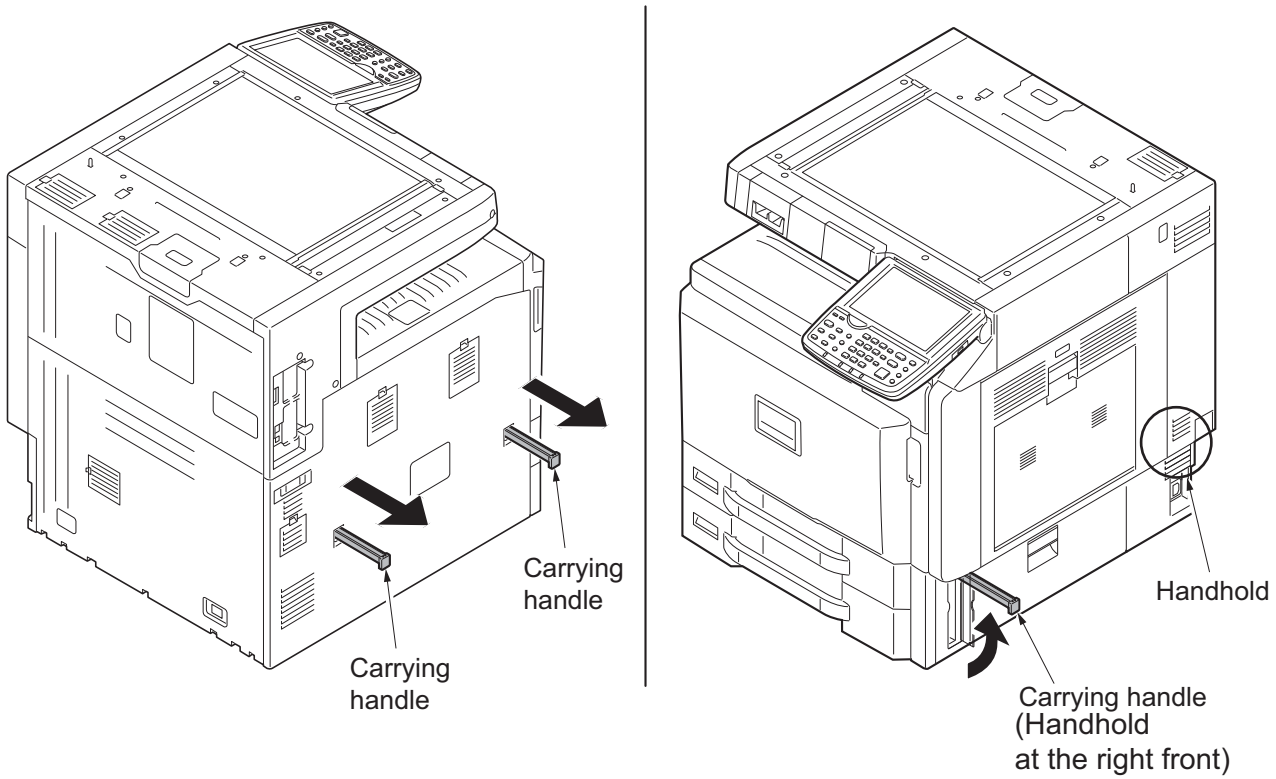

Figure 1-2-2

*: Use the handhold at the right front only for lifting the machine.
Use the handhold on the right side only for carrying the machine by lifting it up. (Do not incline the machine for more than 30 degrees.)

*: Do not use the handhold at the right front to pull the machine around.
Do not use the right-side handhold to move the machine horizontally on the floor. (To prevent deformation due to horizontal stress)

<Allowable angle of the right front handhold positions>

The handhold at the right front side must be lifted only upward at an angle of 30 degrees back and forth.

Do not use the handhold to incline or move the machine sideways.

Allowable range
(±30degree front and backwards)

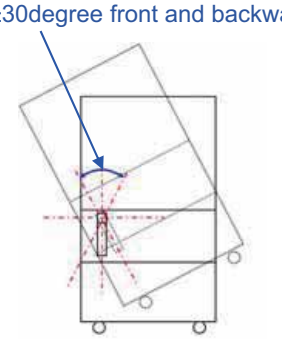

Position of the handhold seen from the right side of the machine

Figure 1-2-3

Unpacking

230V model

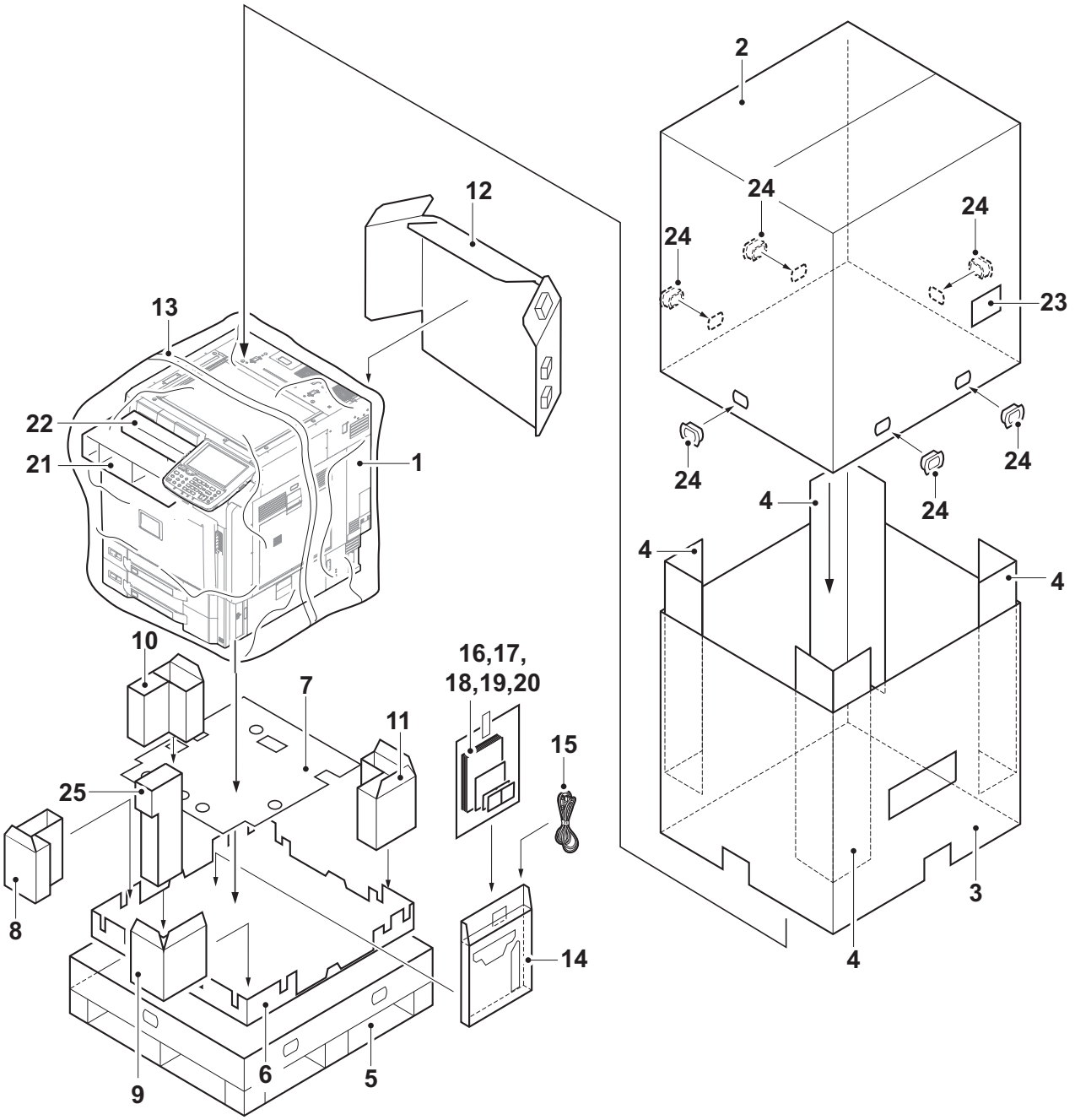

Figure 1-2-4

1. Machine
2. Outer case
3. Inner case
4. Side stays
5. Skid
6. Bottom sheet
7. Bottom pad
8. Bottom front left pad
9. Bottom front right pad
10. Bottom rear left pad
11. Bottom rear right pad
12. Rear pad
13. Machine cover
14. Document tray
15. Power cord
16. Plastic bag
17. Paper size plates
18. Paper media plates
19. Operation panel sheets
20. Operation guide etc.
21. Eject spacer
22. Waste toner box
23. Barcode label
24. Hinge joints
25. Side pad

120V model

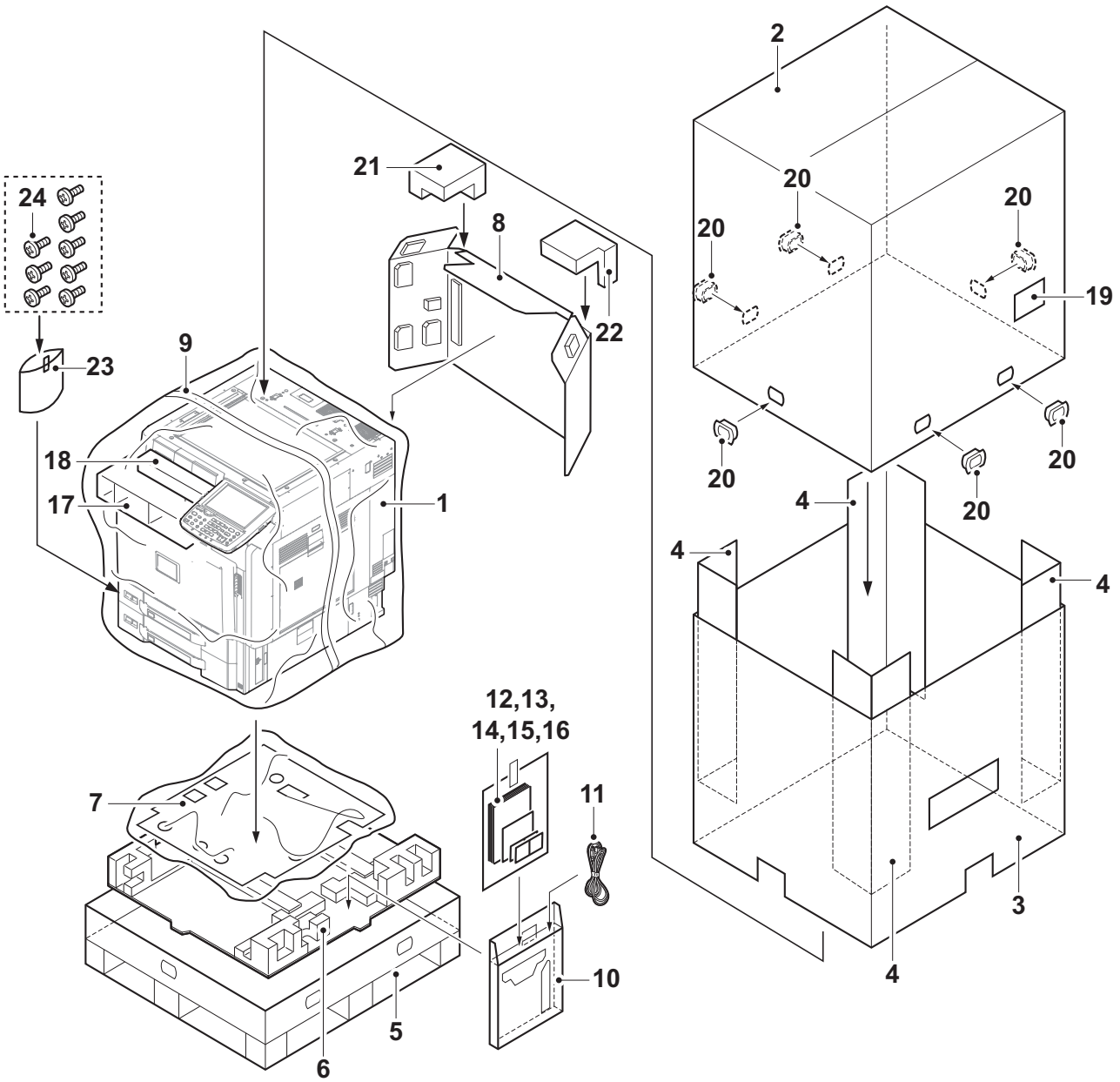

Figure 1-2-5

1. Machine
2. Outer case
3. Inner case
4. Side stays
5. Skid
6. Bottom pad
7. Bottom sheet
8. Top pad
9. Machine cover
10. Document tray
11. Power cord
12. Plastic bag
13. Paper size plates
14. Paper media plates
15. Operation panel sheets
16. Operation guide etc.
17. Eject spacer
18. Waste toner box
19. Barcode label
20. Hinge joints
21. Top left pad
22. Top right pad
23. Plastic bag
24. M3 x 8 screws

Removing the eject spacer

1. Remove the eject spacer and silica gel from the eject section.

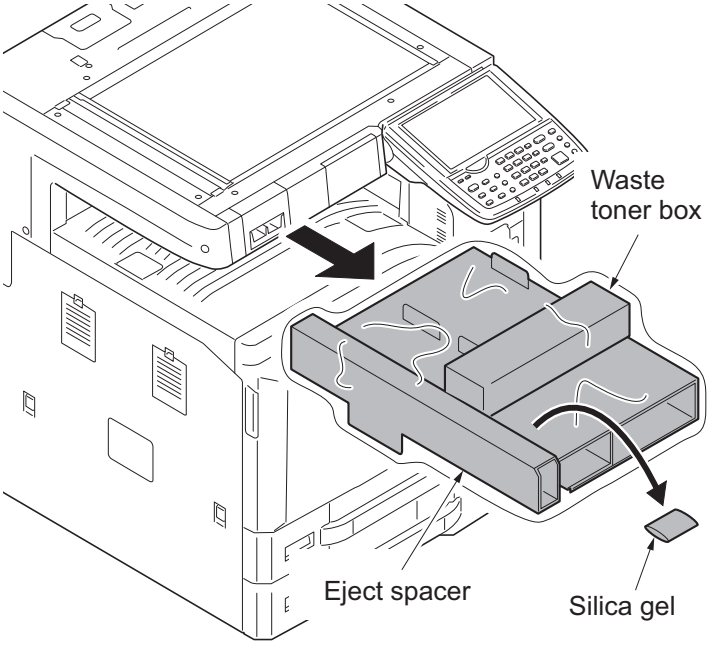

Figure 1-2-6

Removing the tapes

1. Remove two tapes and then remove three protect sheets.

*: If the spacer is attached:
Remove the tape and then remove the spacer.

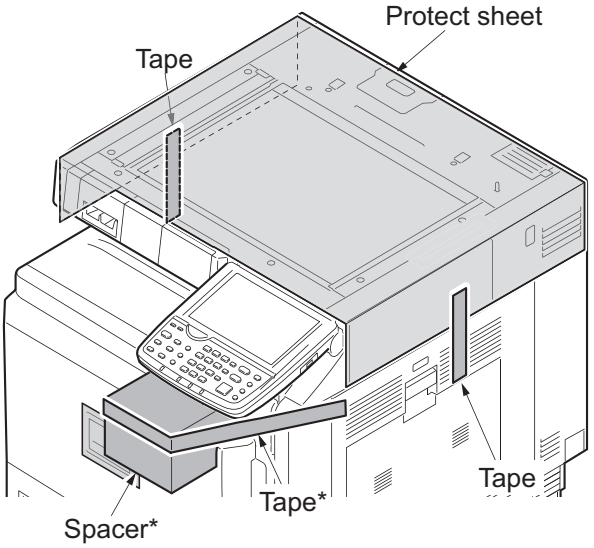

Figure 1-2-7

2. Remove the tape and then remove the ISU lock leaflet.
3. Remove two tapes and then remove A2 paper.
4. Remove four tapes and then remove three protect sheets.
5. Remove three tapes and then remove three protect cover.

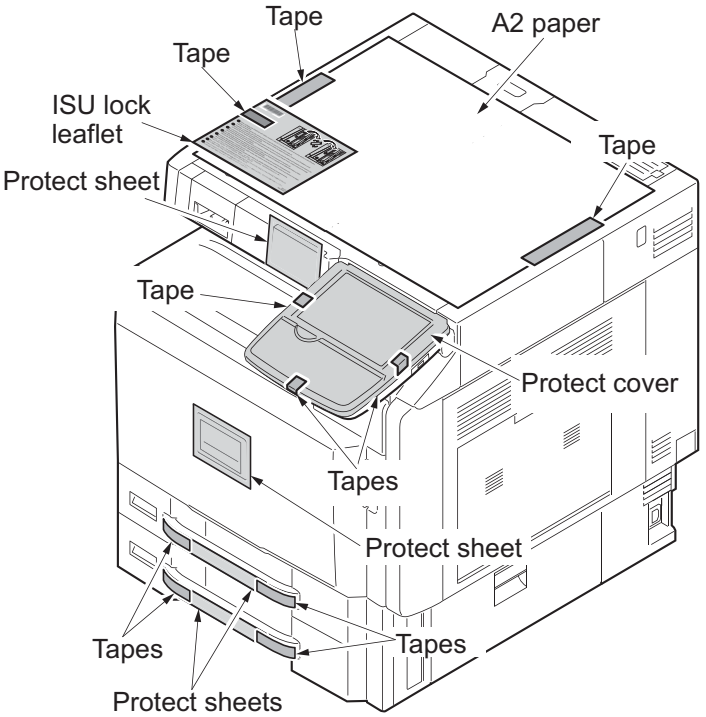

Figure 1-2-8

6. Remove seven tapes.

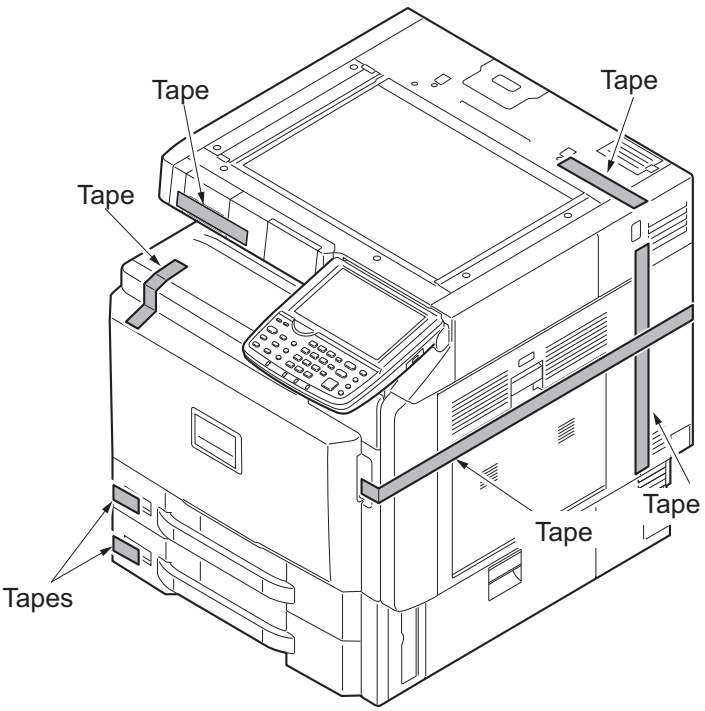

Figure 1-2-9

7. Pull the cassette 2 forward.
8. Remove two tapes.

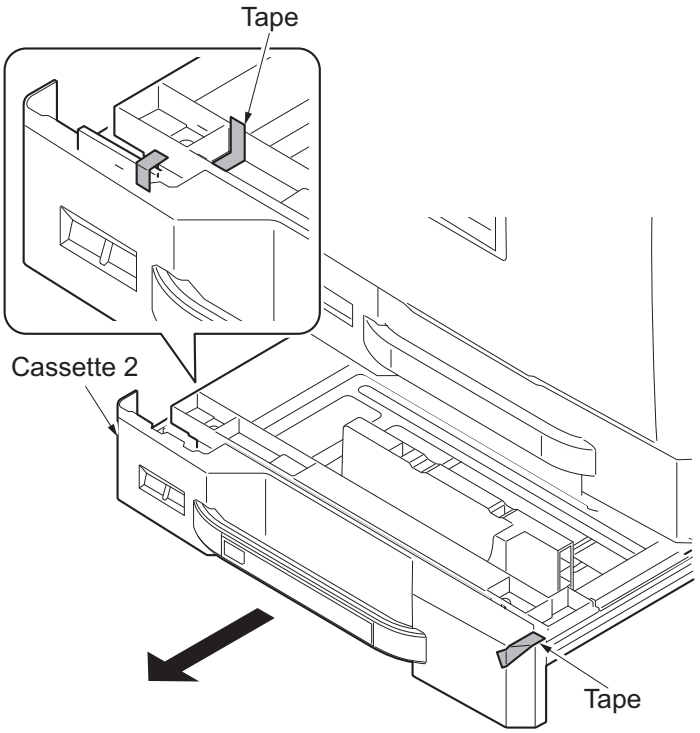

Figure 1-2-10

9. Pull the cassette 1 forward and then Remove two tapes.

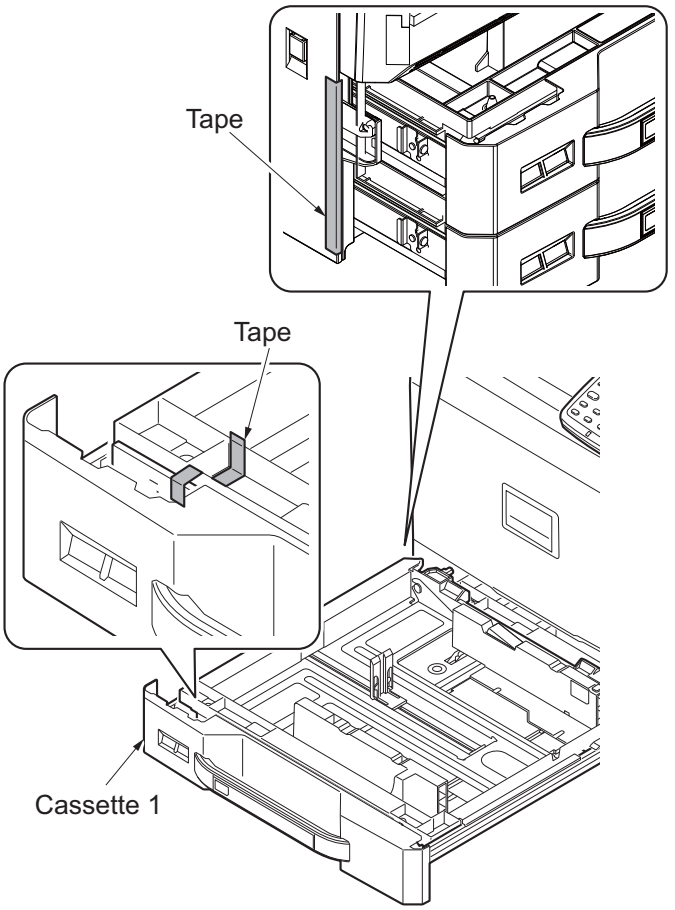

Figure 1-2-11

10. Remove tape.
    *: 45ppm/ 55ppm model only

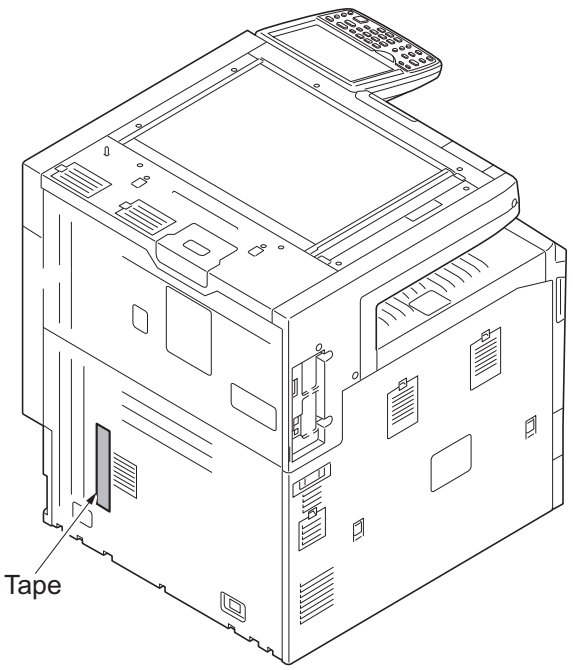

Figure 1-2-12

Installing the paper feeder (option)

1. Install the optional paper feeder or large capacity feeder as necessary.
2. Verify levelness at the four corners of the contact glass using a level gauge, and adjust the level bolts at the bottom of the machine to optimize levelness.

Release the lock of the scanner mirror frame

1. Remove the scanner lock cover.
2. Mount the scanner lock cover in the reverse manner to restore in the original location.

*: Unless unlocking is performed, C3100 is caused.

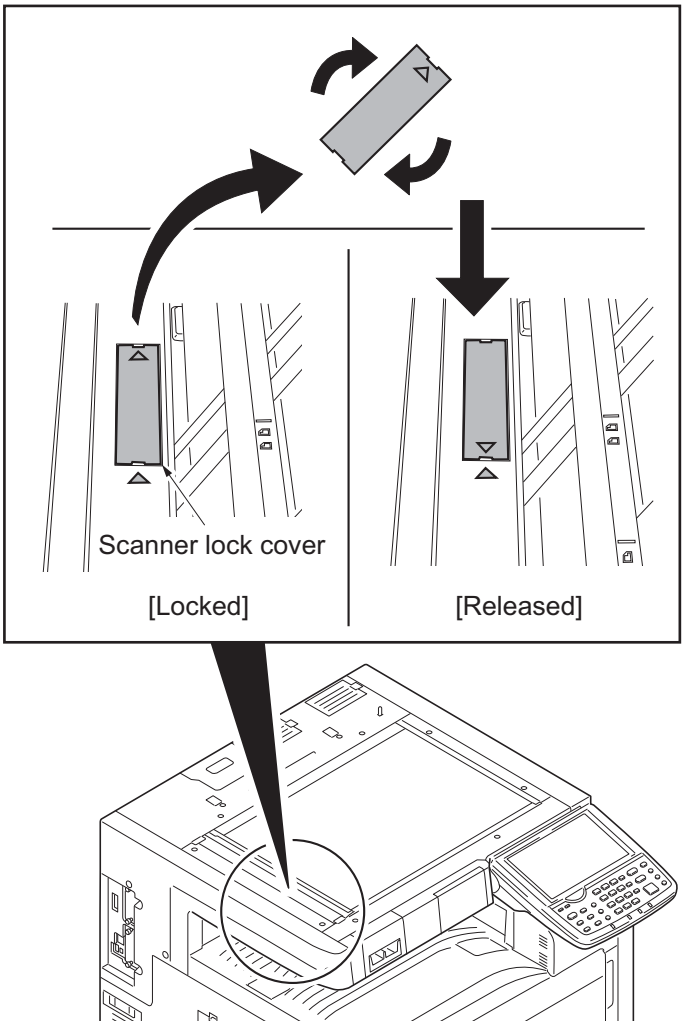

Figure 1-2-13

Release of lift plate stopper

1. Pull cassette 1 and 2 out. Remove the lift plate stopper from each cassette and attach it to the storage location.

*: When moving the machine, attach the lift plate in original position.

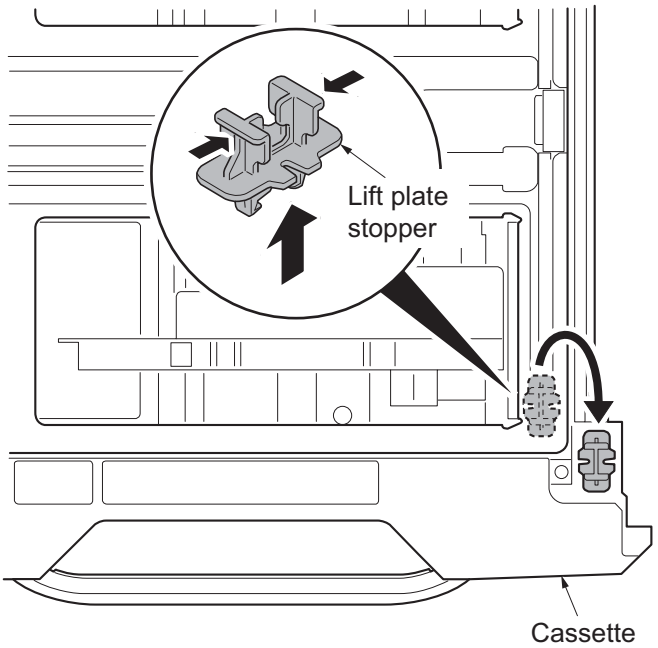

Figure 1-2-14

Loading paper

1. Squeeze the ends of the bottom of the paper length guide and move the guide to fit the length of the paper.

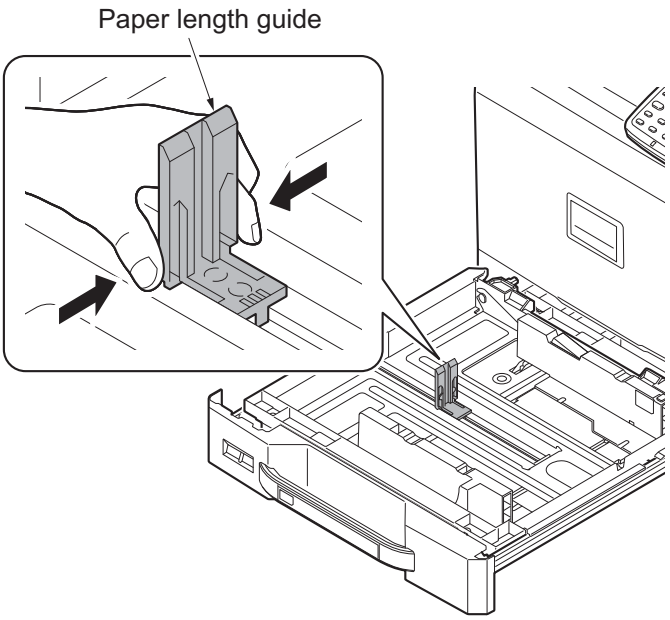

Figure 1-2-15

2. Press the guide lock lever to release the lock.
3. Grasp the paper width adjusting tab and move the paper width guides to fit the paper.

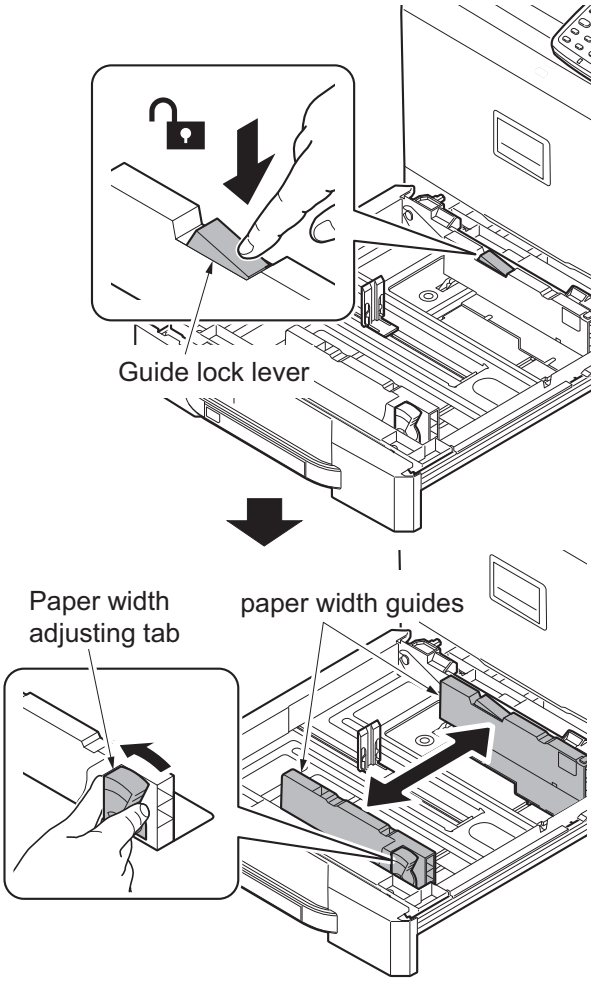

Figure 1-2-16

4. Align the paper flush against the right side of the cassette.

*: Before loading the paper, be sure that it is not curled or folded.

*: Ensure that the loaded paper does not exceed the level indicated.

*: Make sure that the paper length guide and the paper width guides are correctly abut with the paper. Be sure to remove spaces between the guides and the paper.

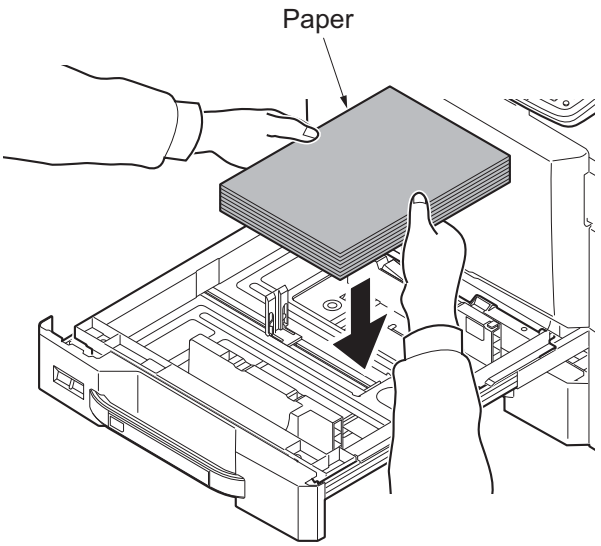

Figure 1-2-17

5. Press the guide lock lever to lock.

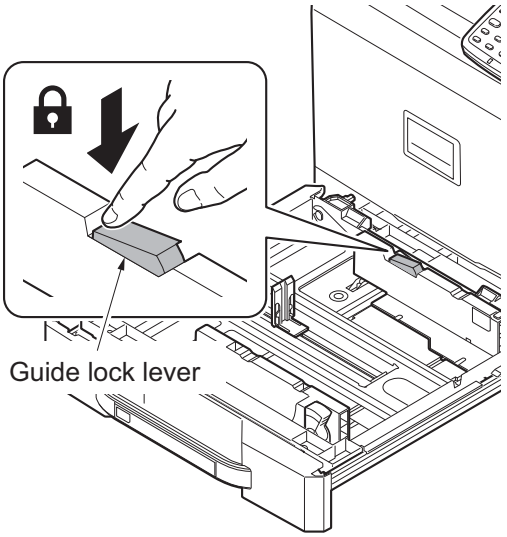

Figure 1-2-18

6. Insert the paper size plate and the paper media plate.
7. Gently push the cassette back in.

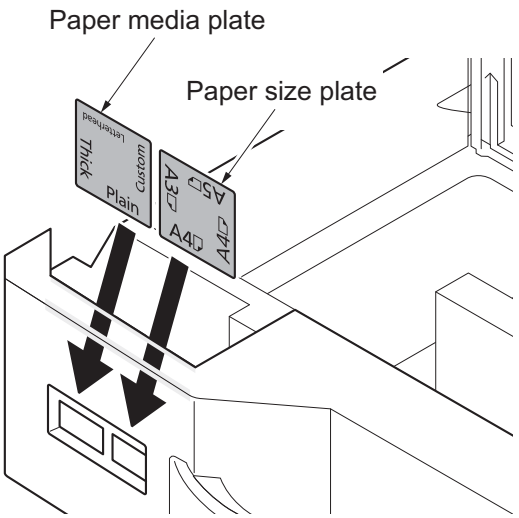

Figure 1-2-19

Installing the toner containers

1. Open the front cover.
2. Hold the toner container vertically and hit the upper part about 3 times. Invert the toner container so that the other end is up, and hit in the same way.
3. Hold the toner container horizontally and shake from side to side about 3 times.

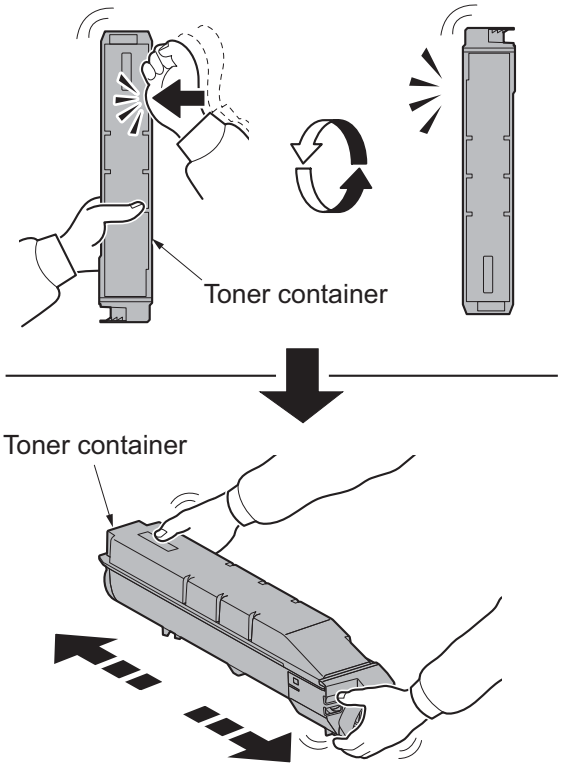

Figure 1-2-20

4. Install four color toner containers.
5. Turn down the toner container release levers to lock the four color toner containers.

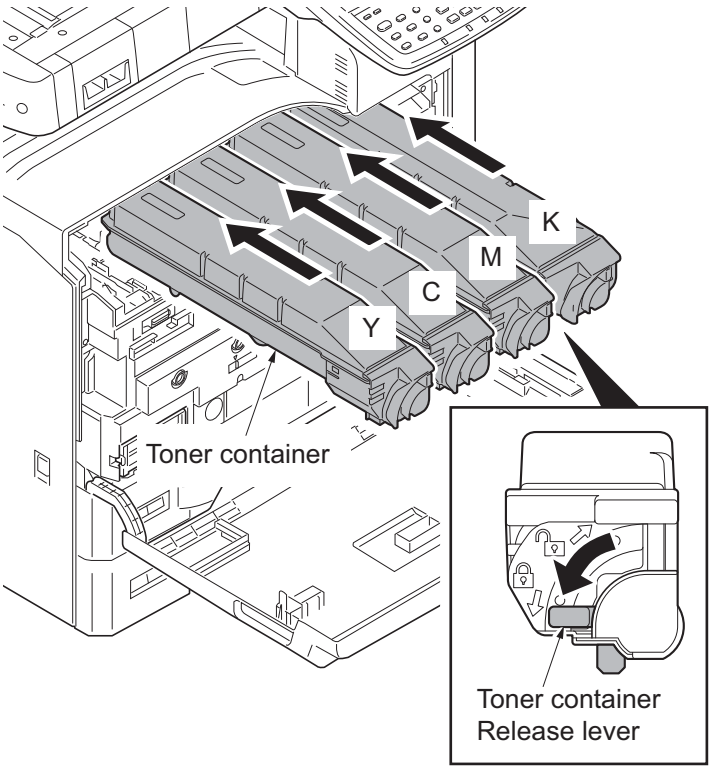

Figure 1-2-21

Unlocking the developer waste exit

Caution

To ease setup, the device was shipped with the developer unit already replenished with developer. Therefore, to prevent developer from spilling during shipping, a developer shutter is equipped with the developer unit.

To disengage the shutter, use the following procedure: Note that if the shutter is not completely disengaged and retained in place, the developer in the developer unit may clog at the outlet causing a damage to the developer unit.

1. Remove the tape and then remove the set up leaflet.

*: The setup leaflet must be affixed in position before dispatching the machine.

2. Press the fixing pin in four positions and rotate.

*: Fully insert the fixing pin keeping the line vertical and rotate by 90 degrees clockwise. Make sure that the central line is horizontal.

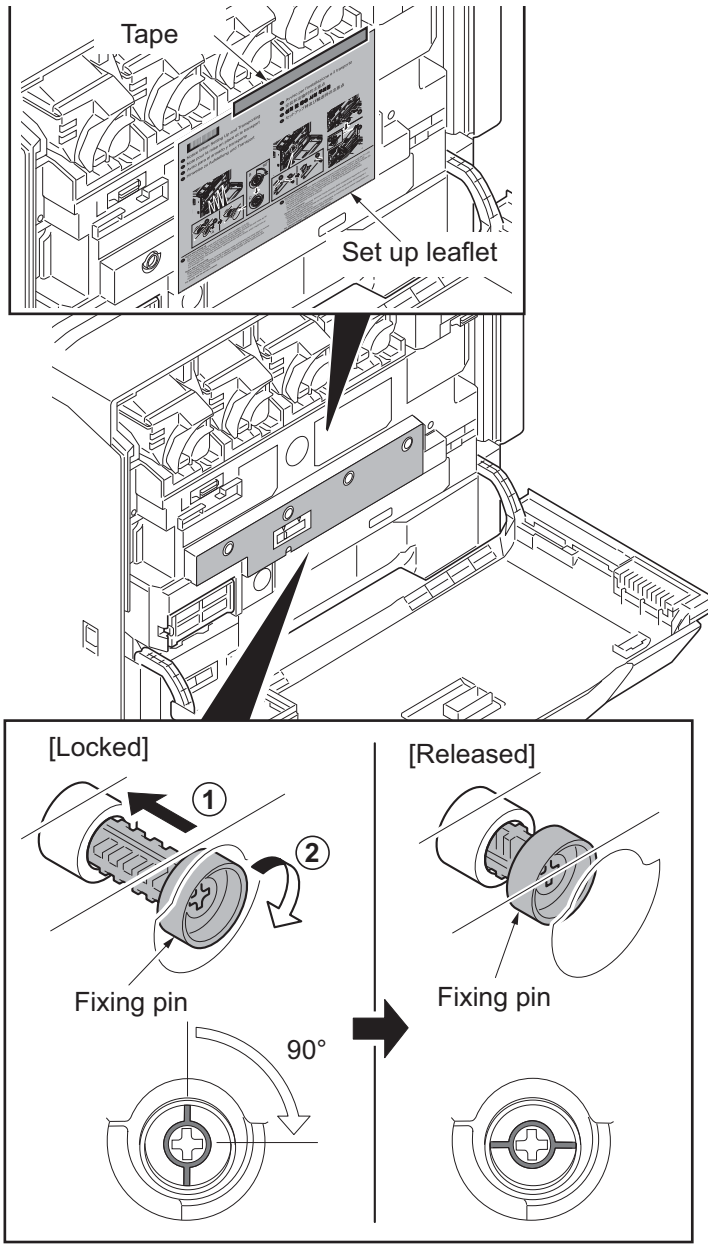

Figure 1-2-22

3. Remove a screw and slide the lever right wards.
4. Fix the lever using the screw previously removed at the right screw hole and unlock the developer waste exit.

*: When the device is shipped again or removed, use the reverse procedure to lock in the developer waste exit. Failure to observe this caution could result in deteriorated print quality and/or C calls.

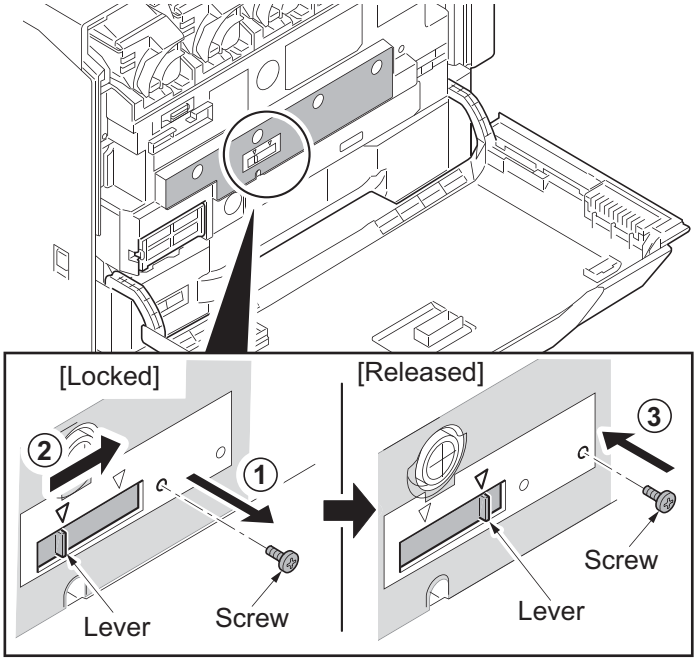

Figure 1-2-23

Installing the waste toner box

Caution

Before installing the waste toner box, unlock the developer waste exit (see page 1-2-15).

1. Push the release button and pull out the waste toner tray.
2. Open the lid and install the waste toner box.
3. Push the waste toner tray back in.
4. Close the front cover.

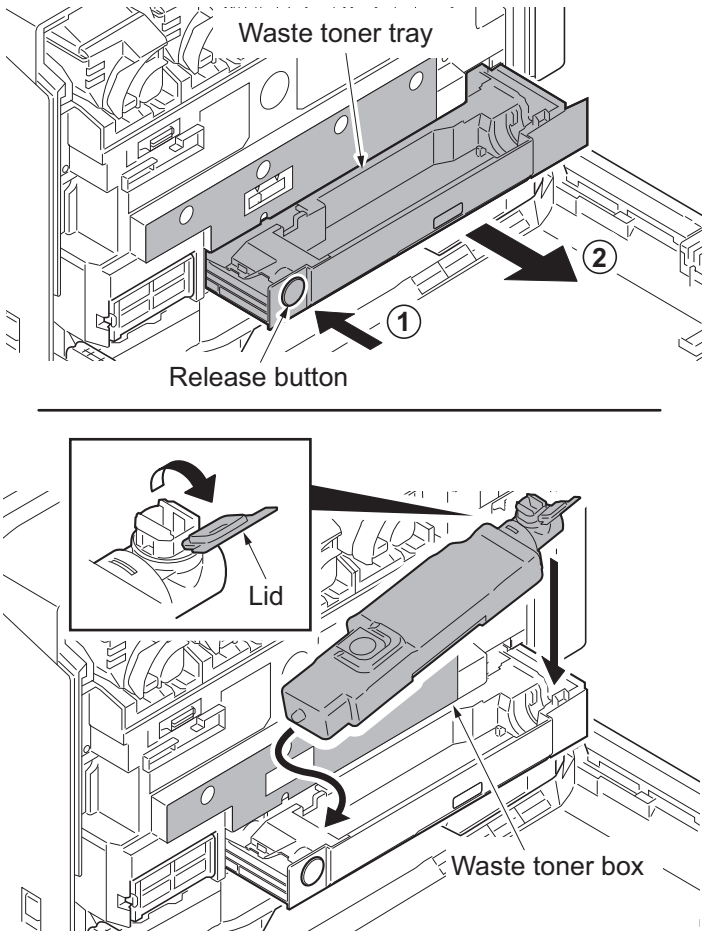

Figure 1-2-24

Replacing operation panel sheet

1. Insert a flat-head screwdriver and slide the operation panel covers A and B to remove them.

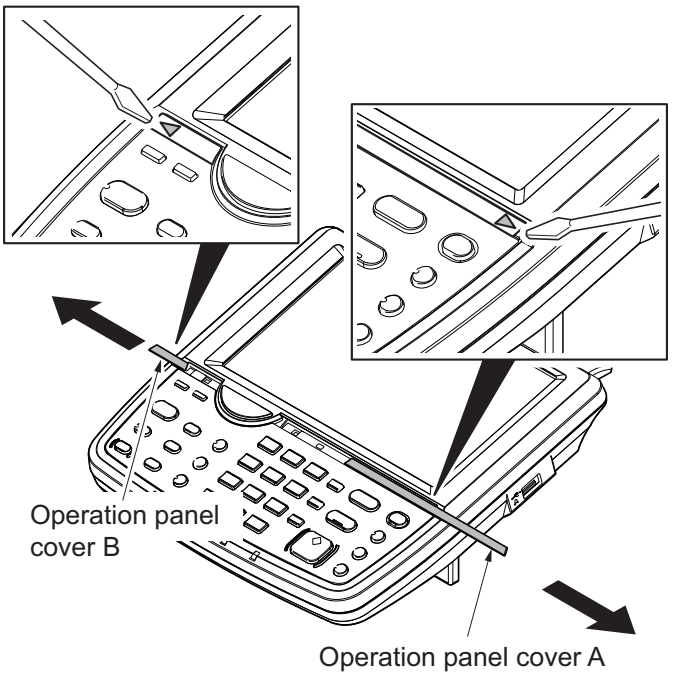

Figure 1-2-25

2. Remove the clear panel.

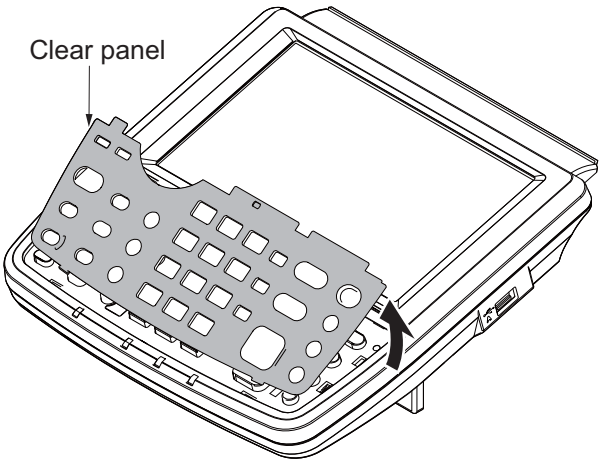

Figure 1-2-26

3. Remove the operation panel sheet.
4. Replace the operation panel sheet of the corresponding language.
5. Refit the clear panel.
6. Refit the operation panel covers A and B.

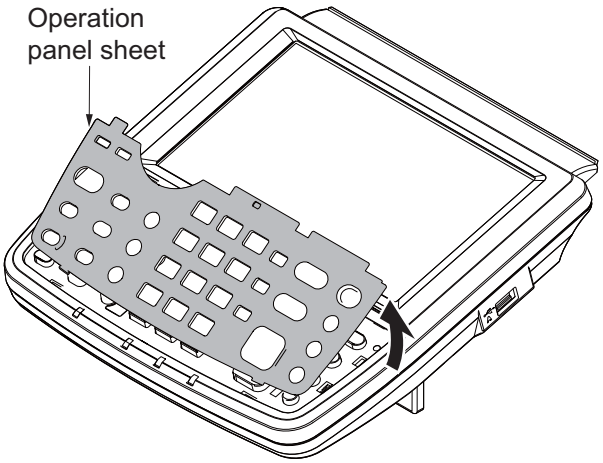

Figure 1-2-27

Installing the original platen or DP (option)

1. Install optional original platen or DP.

Installing other optional devices

1. Install the optional devices (job separator, document finisher and/or fax kit etc.) as necessary.

Installing the cassette heater (option)

1. Install the optional cassette heater as necessary (see page 1-2-67).

Connect the power cord

1. Connect the power cord to the power cord connector on rear lower of the machine.
2. Connect the power plug to the wall outlet.

Setup for adjusting images

1. Turn the main power switch on.

2. Check the messages on the operation panel
   After completion of warming up, in case to display "Warning for high temperature. Adjust the room temperature." on the operation panel, follow the step 4. (Performing Drum Refresh)
   In case to display “Warning for low temperature. Adjust the room temperature.” on the operation panel, install the machine in the other location this message won’t be shown.
   Installing the machine in a low temperature environment could cause image quality problems.
   In case to have no display, follow the step 5 (Performing LSU cleaning).

3. Setup setting at high altitude place.
   When setup is done at high altitude place, execute as follows (such as in Mexico City).
   (see page 1-3-99)
   30 ppm/ 35 ppm model
   U140 -> AC Calib -> High Altitude
   - 1000/ 2000/ 3000/ 4000m
   45 ppm/ 55 ppm model
   U140 -> AC Calib -> Calibration -> Type 0 -> C,M,Y,K (all is On) -> Execute -> Start
   Result 1: developing leak image occur (see page 1-4-271).
   U140 - AC Calib -> Lowering the numerical value of Magnification

   Result 2: grain image (density becomes lighter) occur (see page 1-4-272).
   U140 -> AC Calib -> Calibration -> Type 1 input the “+1” -> C,M,Y,K (all is On) -> Execute -> Start
   In case the image density cannot be improved even with Type 1, set
   U140 -> AC Calib -> High Altitude and Mode 2

4. Performing drum refresh (see the operation guide)
   Press the System menu key.
   Press [Adjustment/Maintenance] and then [Next] of [Drum Refresh].
   Press [Execute] to perform drum refresh. When completed, press [OK].

5. Performing LSU cleaning (see the operation guide)
   Press [Adjustment/Maintenance] and then [Next] of [Laser Scanner Cleaning].
   Press [Execute] to perform LSU cleaning. When completed, press [OK].

Setting the maintenance item U952

1. Enter the maintenance mode by entering 10871087 using the numeric keys.
2. Enter 278 using the numeric keys and press the start key.
3. Select [Execute].
4. Select [SETUP].
5. Press the start key.

*: Running the simulation allows execution histories to be logged.

Exit maintenance mode

1. Enter 001 using the numeric keys and press the start key. The machine exits the maintenance mode.

Completion of the machine installation

*: The maintenance mode U952 [SETUP] includes the following:
If U952 is not used, follow the procedure below.

Adjusting the image

1. Performing calibration
   U464 Setting the ID correction operation - performing calibration

*: **See the operation guide**
Press [Adjustment/Maintenance] and then [Next] of [Calibration].
Press [Execute] to perform Color calibration. When completed, press [OK].

2. Performing color registration
   U469 Color registration
   (see page 1-3-204)

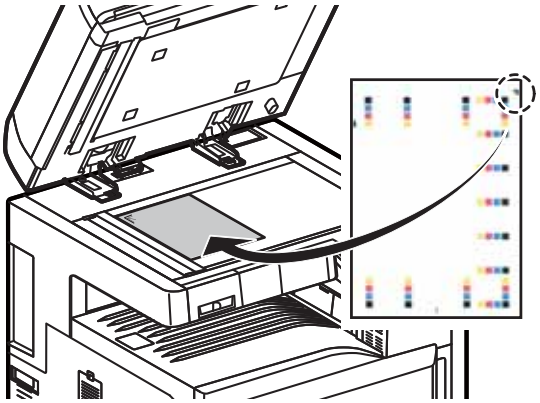

*: **See the operation guide**
Press [Adjustment/Maintenance] and then [Next] of [Color Registration].
Perform adjustments automatically or manually.

Auto correction
Press [Next] in [Auto]. Press [Start]. A chart is printed.
Set the output chart for adjustment as the original.
Press [Start] to perform Color registration.
When completed, press [OK].

Manual correction
Press [Next] in [Manual]. Press [Print] of [Chart]. A chart is printed.
Find the location on each chart where 2 lines most closely match.
Press [Next] of [Registration] and [Change].
Enter the registration values for each chart.
Press [Start] to perform Color registration. When completed, press [OK].

3. Adjusting the halftone automatically (see page 1-3-172)
   Load the cassette with multiple sheets of A4 or Letter paper.
   Enter the maintenance mode by entering 10871087 using the numeric keys.
   Enter 410 using the numeric keys and press the start key.
   Press [Normal Mode] and then press the start key. A test patterns 1, 2 and 3 are outputted.
   Place the output test pattern 1 as the original.
   Place approximately 20 sheets of white paper on the test pattern 1 and set them.
   Press the start key. Adjustment is made.
   Place the output test pattern 2 as the original.
   Place approximately 20 sheets of white paper on the test pattern 2 and set them.
   Press the start key. Adjustment is made.
   Place the output test pattern 3 as the original.
   Place approximately 20 sheets of white paper on the test pattern 2 and set them.
   Press the start key. Adjustment is made.
   [Finish] is displayed in [Phase] when normally completed.
   Press the stop key twice to exit.

4. Make test copies.
   If image quality is unsatisfactory after test copying, execute calibration,
   then retry U410-Adjusting the halftone automatically.
   If paper is fed skewed, perform the adjustment of skewed paper in the cassette (see page 1-5-123).

Setting the delivery date (maintenance item U278)

1. Enter the maintenance mode by entering 10871087 using the numeric keys.
2. Enter 278 using the numeric keys and
   press the start key.
3. Select [Today].
4. Press the start key. The delivery date is
   set.
5. Press the stop key to exit.

Output an own-status report (maintenance item U000)

1. Enter 000 using the numeric keys and press the start key.
2. Select [Maintenance] and press the
   start key. A status report is output.
3. Press the stop key to exit.

Clearing the all copy counts and machine life counts (one time only)

*: Clear the counter using the maintenance mode U927, if necessary.
1. Enter 927 using the numeric keys and press the start key.
2. Select [Execute].
3. Press the start key. All copy counts and machine life counts are cleared.

*: After completing the settings, back up the data with the U917 maintenance mode.
   This enables data restoration when replacing the main PWB or hard disk drive.

(2) Setting initial copy modes

Factory settings are as follows:

Maintenance item No.	Contents	Factory setting
U253	Switching between double and single counts	DBL(A3/Ledger)
U260	Selecting the timing for copy counting	Eject
U276	Setting the copy count mode	Mode0
U284	Setting 2 color copy mode	Off
U285	Setting service status page	On
U323	Setting abnormal temperature and humidity warning	On
U325	Setting the paper interval	Off/1
U326	Setting the black line cleaning indication	On/8
U327	Setting the cassette heater control	Off
U343	Switching between duplex/simplex copy mode	Off

1-2-3 Installing the key counter (option)

(1) Installing directly on the device

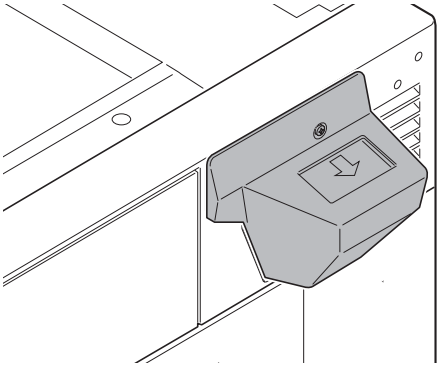

Key counter installation requires the following parts:

Parts	Quantity	Part.No.
Key counter	1	3025418011
Key counter set	1	302A369709
Key counter wire	1	302K946AJ0
M4 nut	2	3CY06030

*: Not used in 120V model.

Supplied parts of key counter set (302A369709):

Parts	Quantity	Part.No.
Key counter socket assembly	1	3029236241
Key counter cover retainer	1	302GR03010
Key counter retainer	1	302GR03020
Key counter cover	1	3066060011
Key counter mount	1	3066060041
Edging	2*	7YZM210006++H01
Band	1*	M21AH010
M3 x 8 tap-tight P screw	1*	5MBTPB3008PW++R
M4 x 10 tap-tight P screw	2*	5MBTPB4010PW++R
M4 x 10 tap-tight S screw	2*	5MBTPB4010TW++R
M3 x 6 bronze flat-head screw	2	7BB003306H
M4 x 20 tap-tight S screw	2	7BB100420H
M3 nut	1	7BC1003055++H01
M3 x 8 bronze binding screw	1*	B1B03080
M4 x 30 tap-tight S screw	1*	B1B54300
M4 x 6 chrome TP screw	5	B4A04060
M4 x 10 chrome TP screw	2*	B4A04100

*: Not used in this model.

Procedure

1. Press the power key on the operation panel to off. Make sure that the power indicator and the memory indicator are off before turning off the main power switch. And then unplug the power cable from the wall outlet.
2. Fit the key counter socket assembly to the key counter retainer using two M3 x 6 screws and nut.
3. Fit the key counter mount to the key counter cover using two M4 x 6 screws.
4. Fit the key counter retainer to the key counter mount using two M4 x 6 screws.

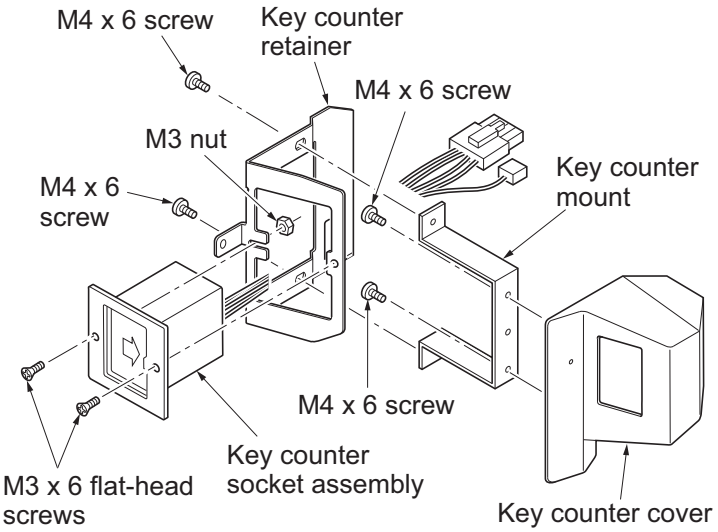

Figure 1-2-28

*: For the 120V model, proceed to step 26.

5. Pull the paper conveying unit out.
6. Remove two screws and then remove the ISU right cover.
7. Remove the screw and five hooks and then remove the right upper cover.

*: Unlatch the stoppers with the rear bottom one first.

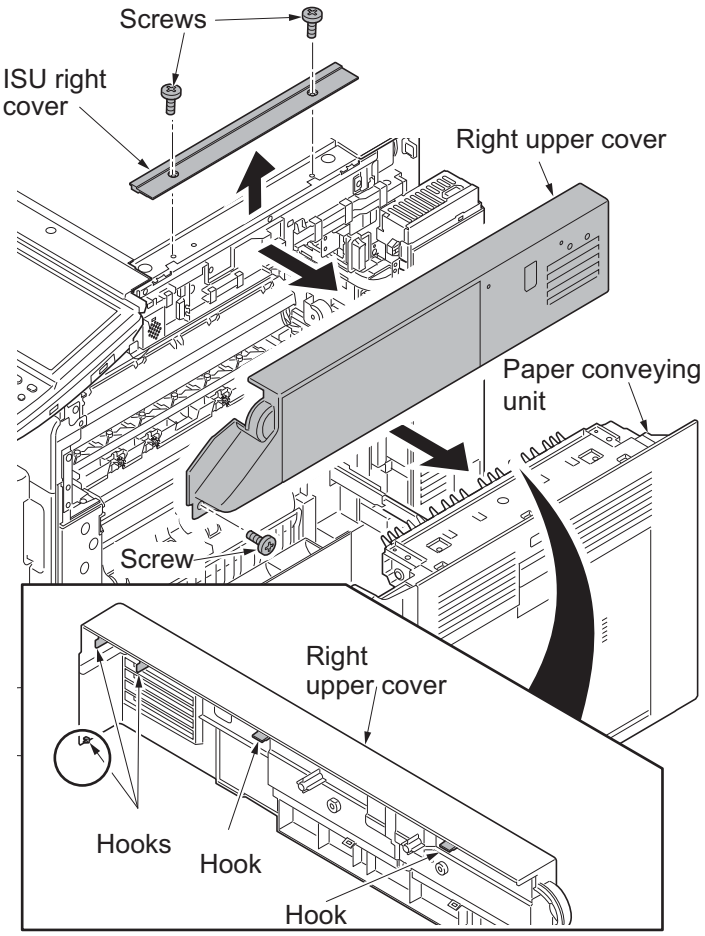

Figure 1-2-29

8. Cut out the aperture plate on the right upper cover using nippers.

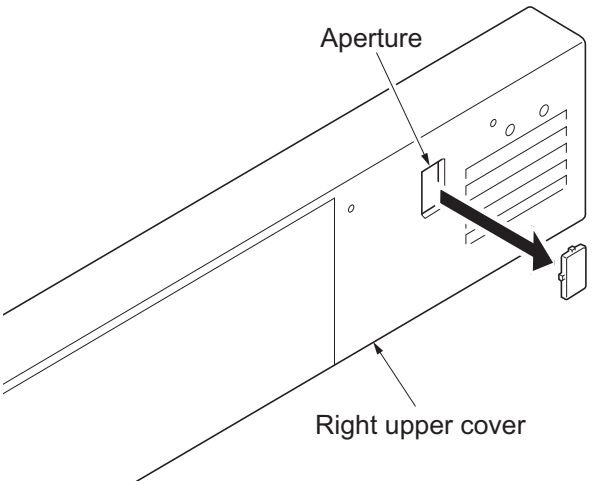

Figure 1-2-30

9. Remove nine screws and then remove the rear upper cover.

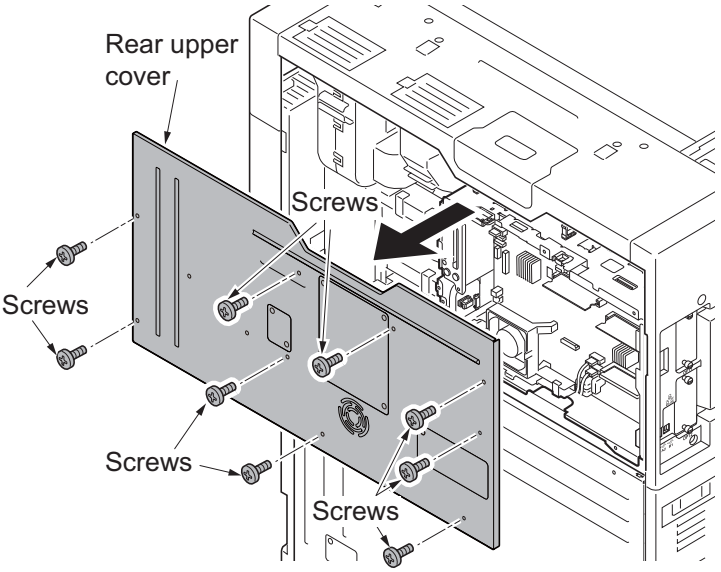

Figure 1-2-31

10. Release six wire saddles on the controller box.
11. Remove the wire holder.

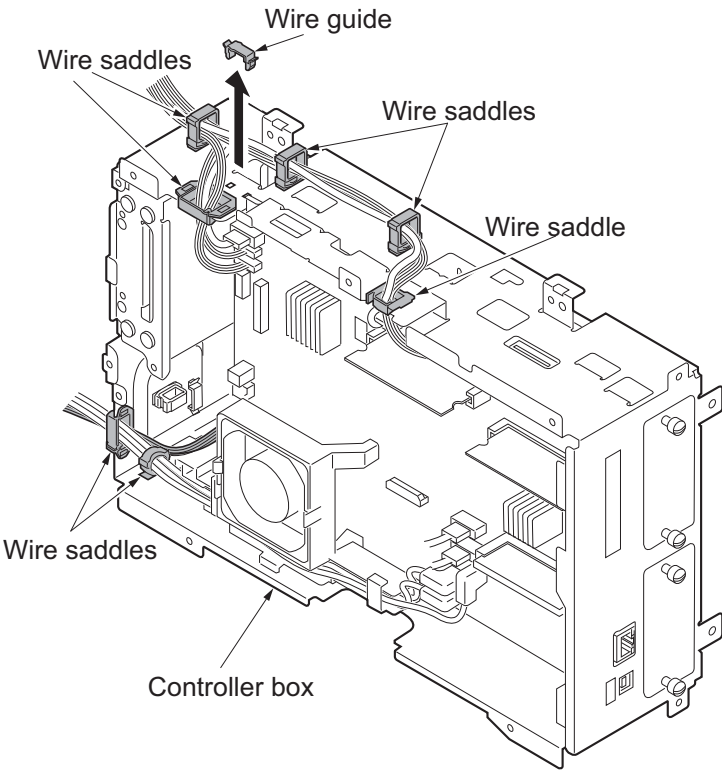

Figure 1-2-32

12. Remove the following connectors that connected to the main PWB from the outside of the control box.
    YC25
    YC11
    YC30
    YC42
    YC43(FFC connector with a lock)
    YC21(WH)
    YC22(WH)
    YC26(BK)
    YC6
    YC12

*: Before removing the connector type FFC YC43, unlock the lock by pressing the lock levers at both ends.

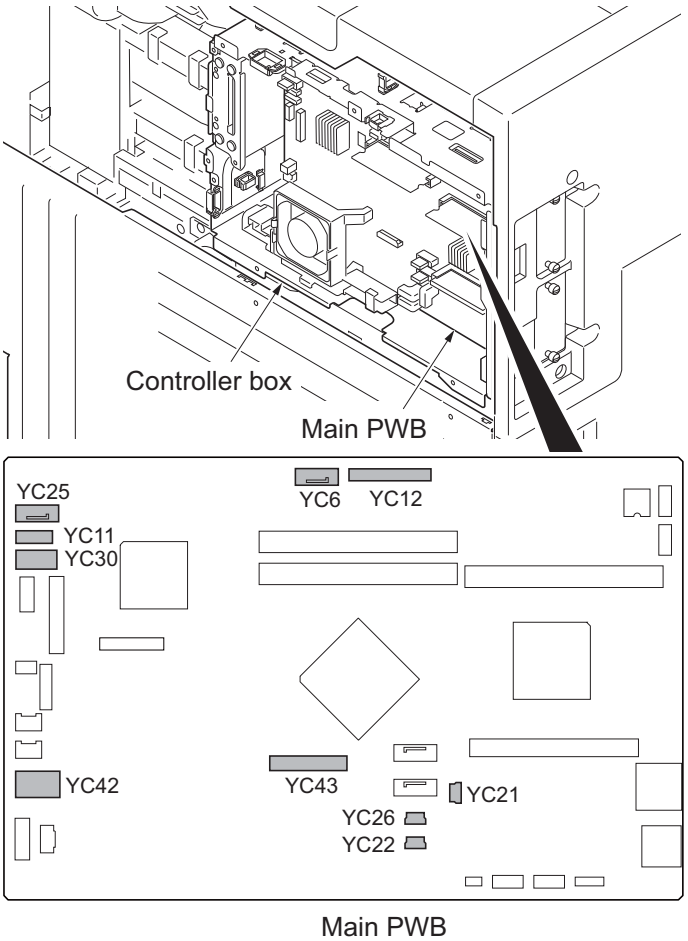

Figure 1-2-33

13. Remove five screws.
14. Unhook two hooks and then remove the controller box.

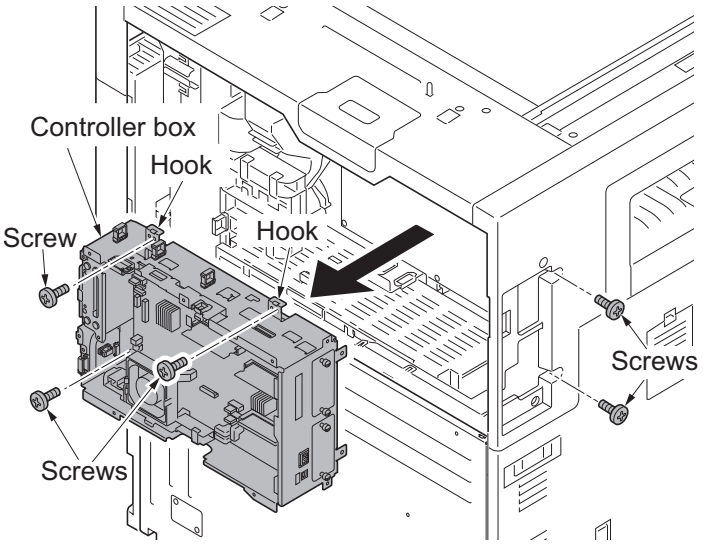

Figure 1-2-34

15. Connect the connector of the key counter wire to the connector YC24 on the engine PWB.

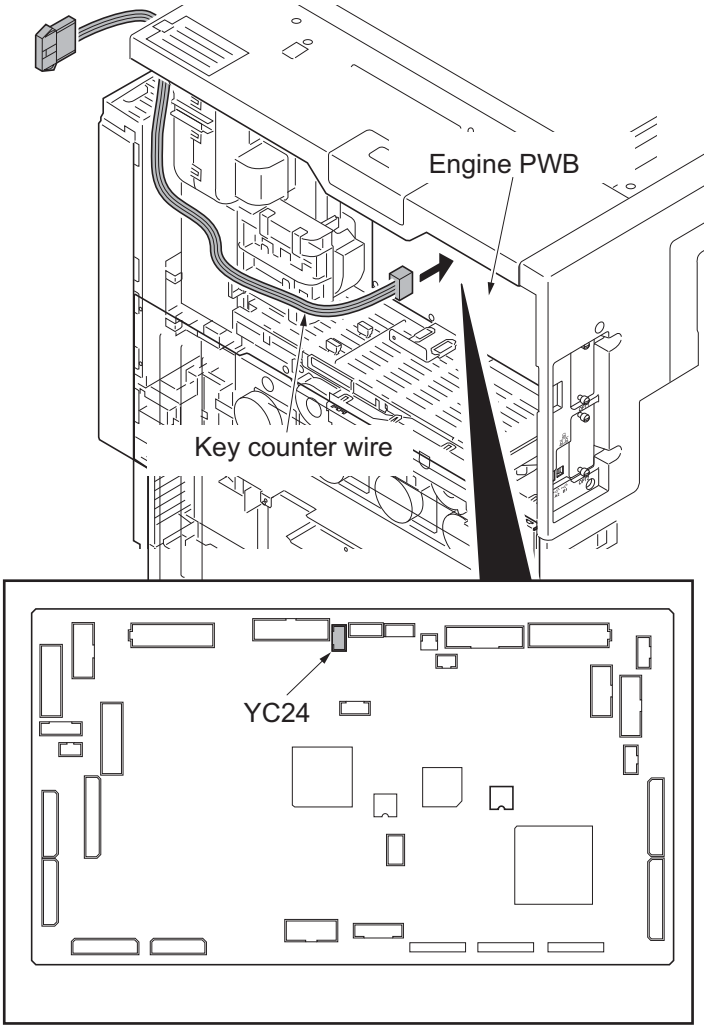

Engine PWB

Figure 1-2-35

16. Remove two wire holders.
17. Route the key counter wire through the wire guide and fix it at the wire holders.

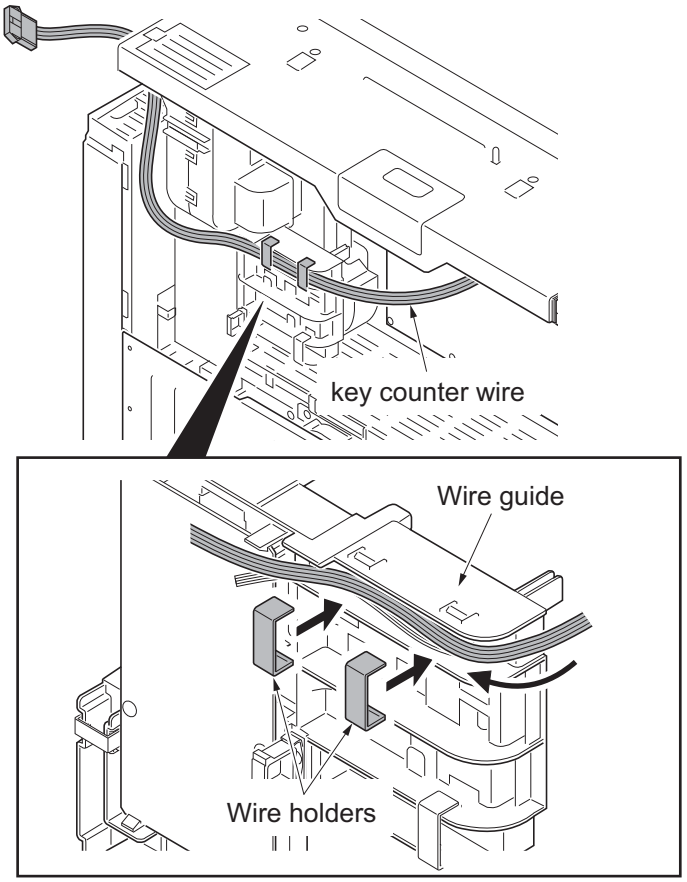

Figure 1-2-36

18. Release three wire saddles.
19. Remove the wire holder.
20. Route the key counter wire through the three wire saddles and wire guide and fix it at the wire holder.
21. Refit the controller box.
22. Refit the left upper cover and the rear upper cover.

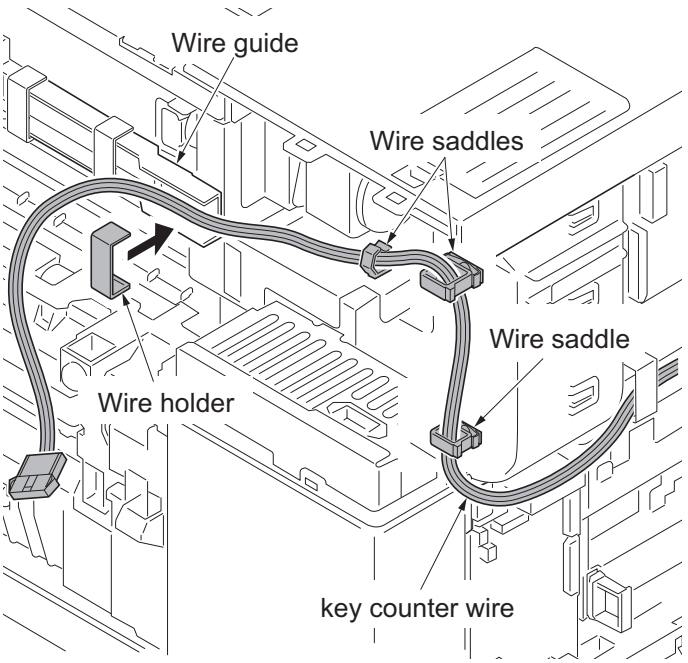

Figure 1-2-37

23. Mount two M4 nuts at the back of the right upper cover.

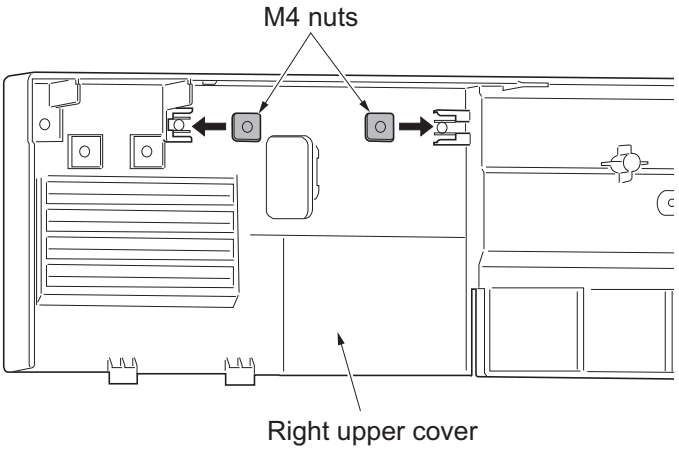

Figure 1-2-38

24. Insert the projection of the key counter cover retainer in the aperture of the right upper cover.
25. Fit the key counter cover retainer using the two M4 x 20 screws.

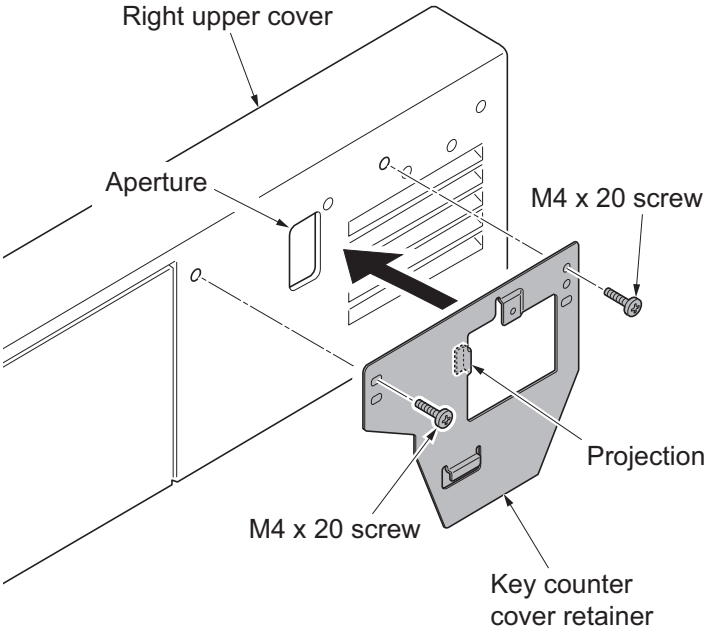

Figure 1-2-39

26. Pass the connector of the key counter wire through the aperture in the right upper cover.
27. Refit the right upper cover.
28. Refit the ISU right cover.
29. Close the paper conveying unit.

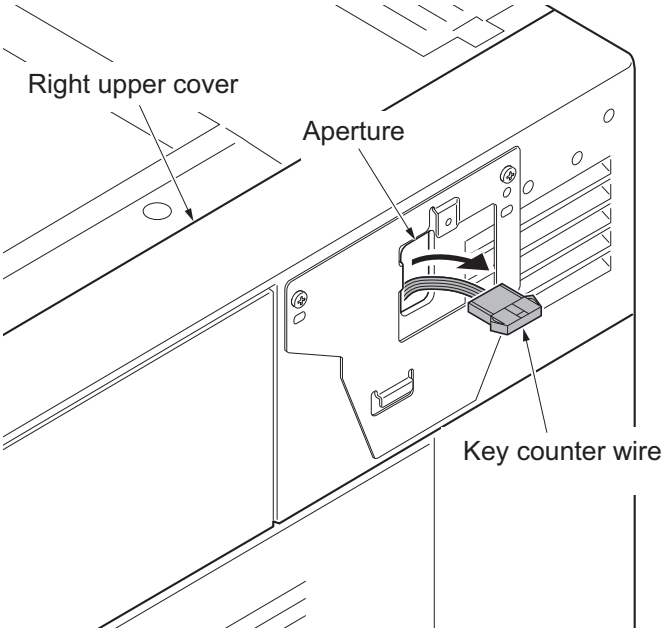

Figure 1-2-40

30. Connect the key counter signal cable to the key counter wire.
31. Fit the key counter cover to the machine using the M4 x 6 screw.
32. Insert the key counter into the key counter socket assembly.
33. Turn the main power switch on and enter the maintenance mode.
34. Run maintenance item U204 and select [Key-Counter] (see page 1-3-123).
35. Exit the maintenance mode.
36. Check that the message requesting the key counter to be inserted is displayed on the touch panel when the key counter is pulled out.
37. Check that the counter counts up as copies are made.

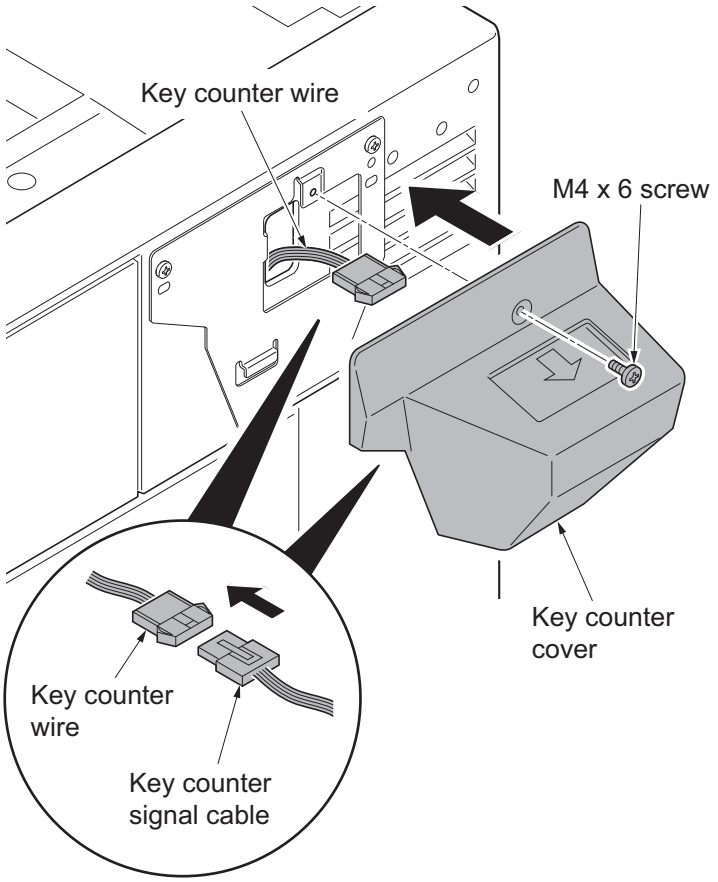

Figure 1-2-41

(2) Mounting on the document table

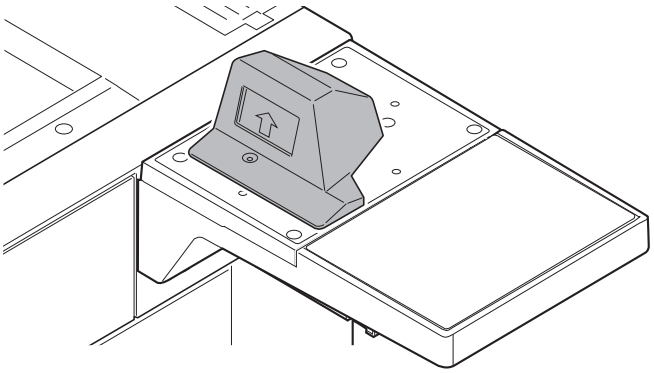

Key counter installation requires the following parts:

Parts	Quantity	Part.No.
Key counter	1	3025418011
Key counter set	1	302A369709
Key counter wire	1	302K946AJ0
Document table	1	1902LC0UN2 (option)

Supplied parts of key counter set (302A369709):

Parts	Quantity	Part.No.
Key counter socket assembly	1	3029236241
Key counter cover retainer	1	302GR03010
Key counter retainer	1	302GR03020
Key counter cover	1	3066060011
Key counter mount	1	3066060041
Edging	2*	7YZM210006++H01
Band	1*	M21AH010
M3 x 8 tap-tight P screw	1*	5MBTPB3008PW++R
M4 x 10 tap-tight P screw	2*	5MBTPB4010PW++R
M4 x 10 tap-tight S screw	2*	5MBTPB4010TW++R
M3 x 6 bronze flat-head screw	2	7BB003306H
M4 x 20 tap-tight S screw	2	7BB100420H
M3 nut	1	7BC1003055++H01
M3 x 8 bronze binding screw	1*	B1B03080
M4 x 30 tap-tight S screw	1*	B1B54300
M4 x 6 chrome TP screw	5	B4A04060
M4 x 10 chrome TP screw	2*	B4A04100

*: Not used in this model.

Supplied parts of document table (1902LC0UN2):

Parts	Quantity	Part.No.
Tray stay	1	-
Tray mount	1	-
Tray cover	1	302LC04601
Tray lower cover	1	302LC04710
Tray retainer	1	-
Sheet	2*	302LC04660
Pin	2	303NS24410
M4 nut	2	3CY06030
M4 x 8 screw	7	7BB180408H
M4 x 14 screw	2	7BB607414H

*: Sheet x1 is not used.

Procedure

1. Perform steps 1 through 25 as explained in (1) Installing directly on the device.

2. Mount two M4 nuts at the back of the right upper cover.
3. Fit the tray stay to the right upper cover using two M4 x 14 screws.

*: Secure the screws making sure that the nuts do not fall.

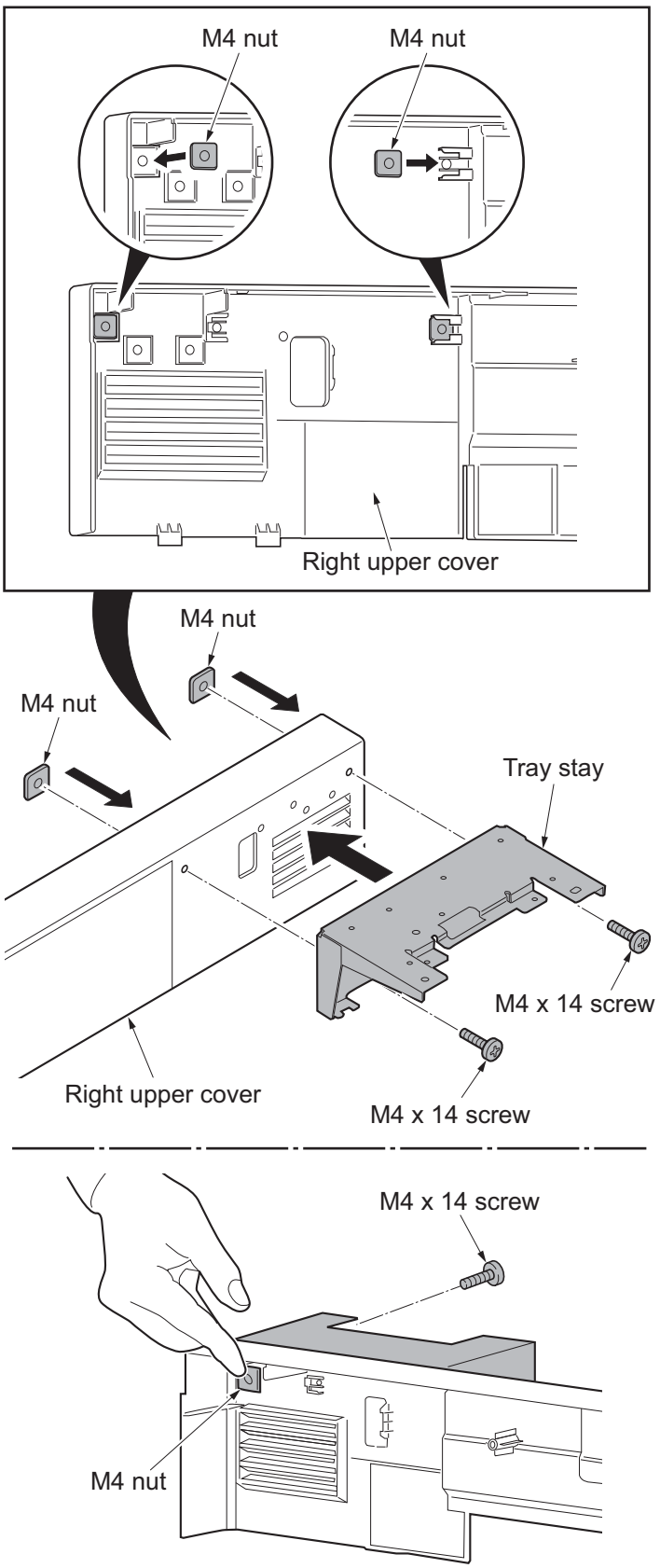

Figure 1-2-42

4. Fit the tray retainer to the machine using the M4 x 8 screw.

*: The procedure described above is not required if an optional right job separator has been installed.

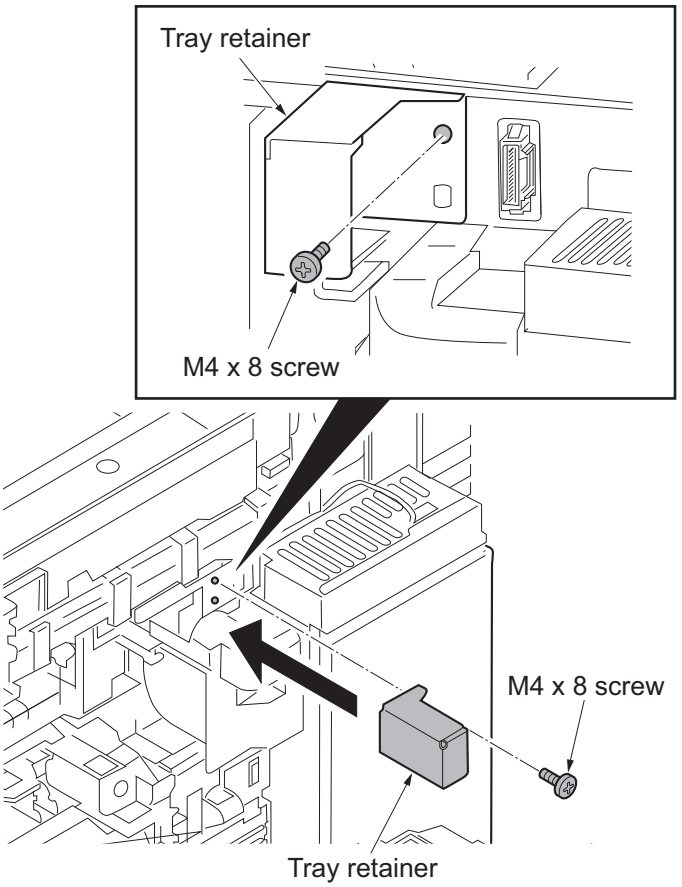

Figure 1-2-43

5. Pass the connector of the key counter wire through the aperture in the right upper cover.
6. Refit the right upper cover.
7. Refit the ISU right cover.
8. Close the paper conveying unit.

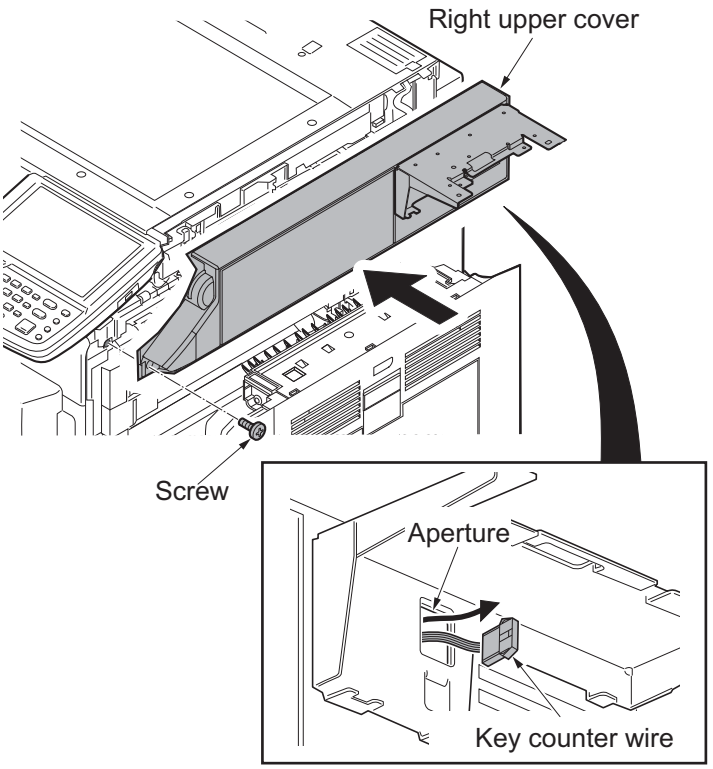

Figure 1-2-44

9. Snap in the tray mount to the tray stay and fix using two M4 x 8 screws.

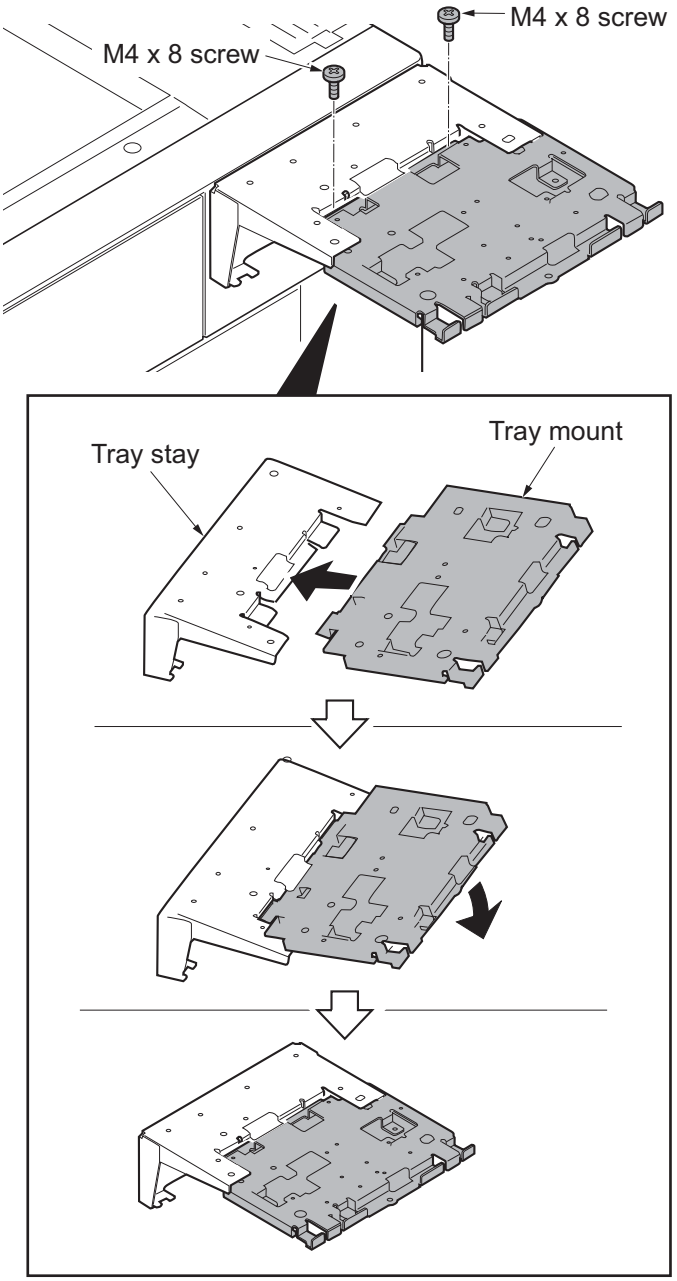

Figure 1-2-45

10. Cut out the aperture plate on the tray cover using nippers.
11. Fit the tray cover to the tray stay using four M4 x 8 screws.

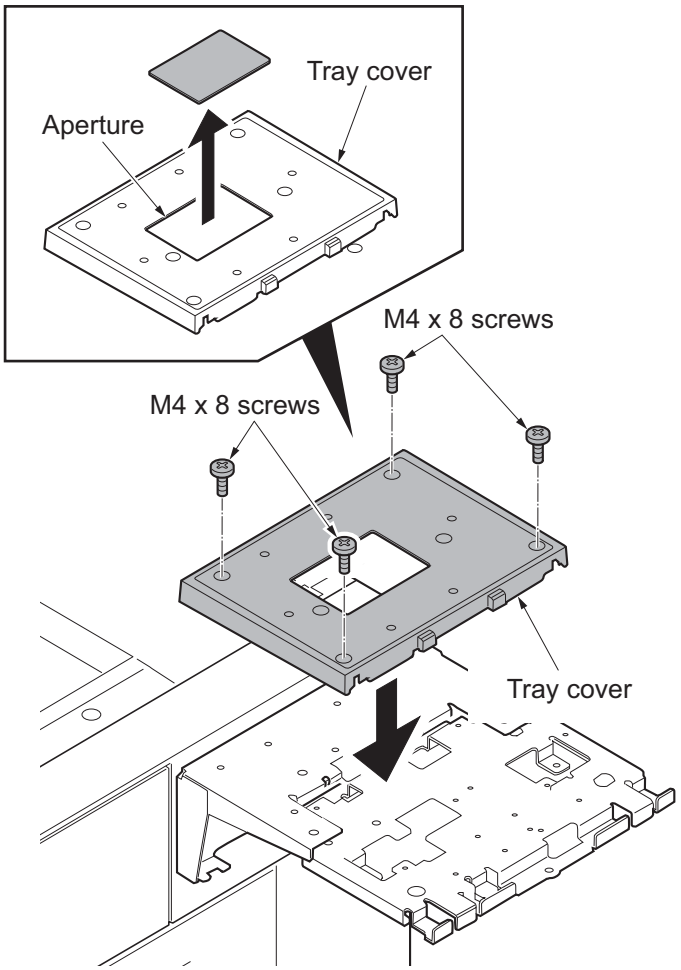

Figure 1-2-46

12. Fit the key counter cover retainer using two M4 x 20 tap-tight S screws.

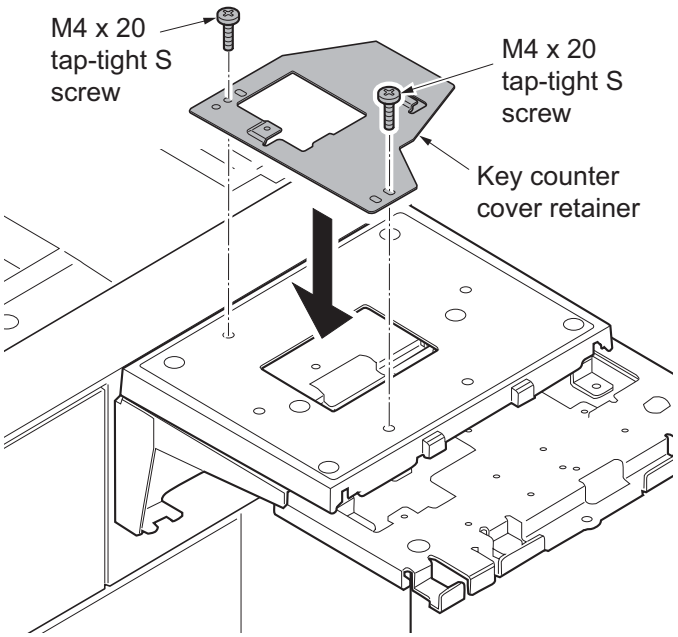

Figure 1-2-47

13. Pass the key counter signal cable through the aperture in the document table.
14. Fit the key counter cover to the document table using the M4 x 6 screw.
15. Connect the key counter signal cable to the key counter wire.

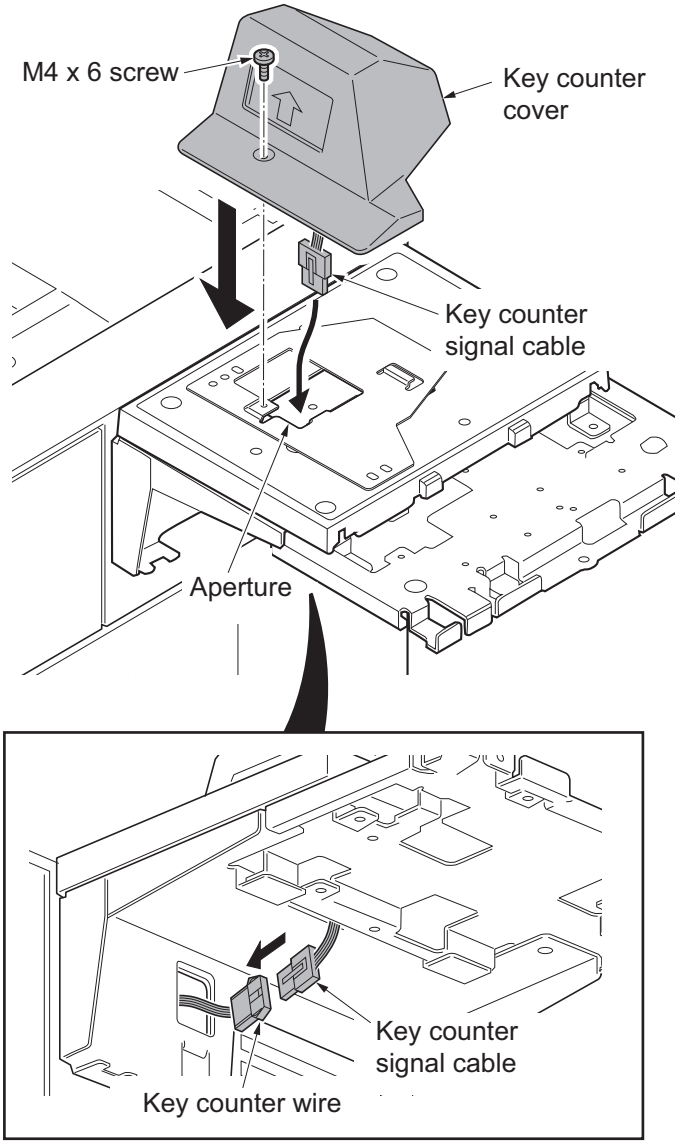

Figure 1-2-48

16. Fit the tray lower cover.
    *: Install the key counter signal cable and key counter wire so that they are held behind the tray lower cover.

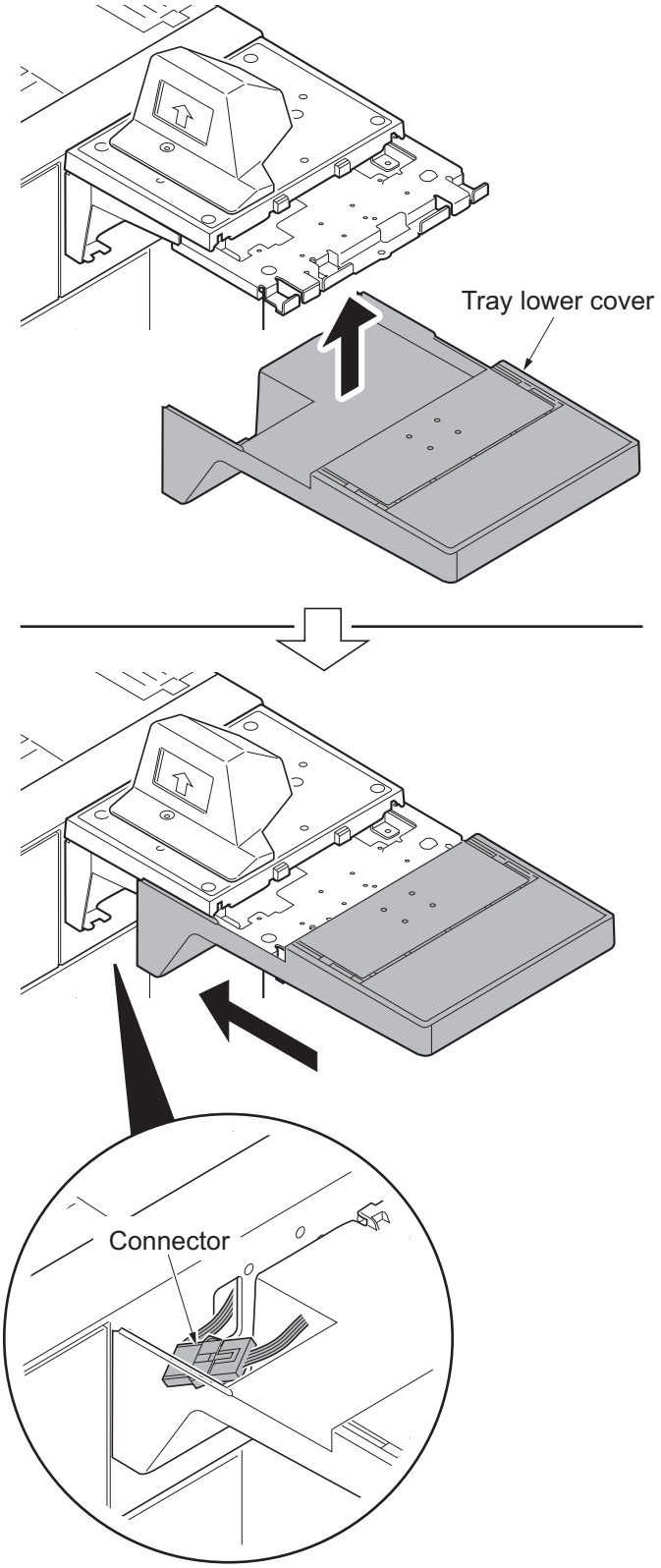

Figure 1-2-49

17. Secure the tray lower cover with two pins.

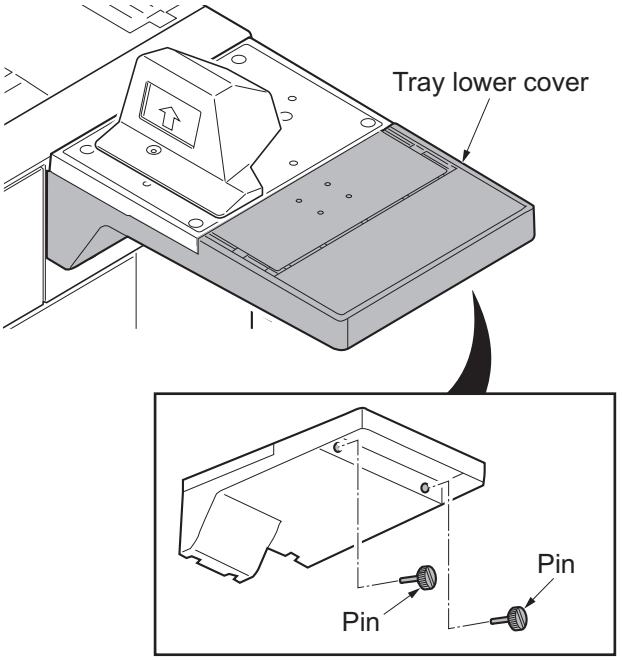

Figure 1-2-50

18. Adhere the sheet onto right side of the document table.

19. Insert the key counter into the key counter socket assembly.
20. Turn the main power switch on and enter the maintenance mode.
21. Run maintenance item U204 and select [Key-Counter] (see page 1-3-123).
22. Exit the maintenance mode.
23. Check that the message requesting the key counter to be inserted is displayed on the touch panel when the key counter is pulled out.
24. Check that the counter counts up as copies are made.

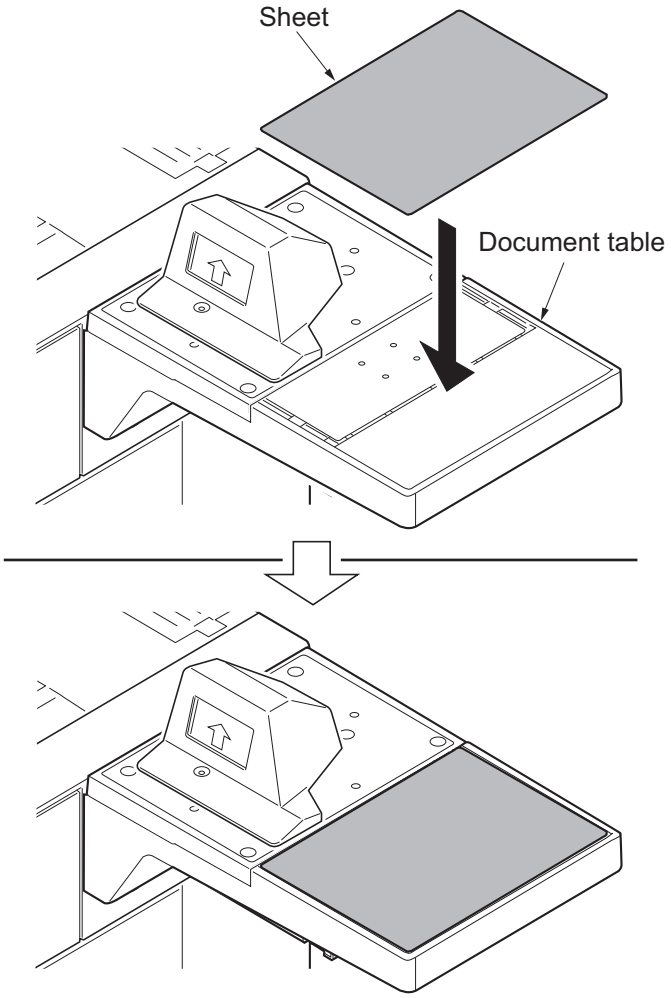

Figure 1-2-51

1-2-4 Installing the key card MK-2 (option for japan only)

Key card installation requires the following parts:

Parts	Quantity	Part.No.
Key card MK-2	1	8J272002 (option)
MK-2 mount	1	Supplied with MK-2
M4 x 16 screw	2*	
Document table	1	1902LC0UN2 (option)
M4 x 20 tap-tight S screw	2	7BB100420H

*:Not used in this model.

Supplied parts of document table (1902LC0UN2):

Parts	Quantity	Part.No.
Tray stay	1	-
Tray mount	1	-
Tray cover	1	302LC04601
Tray lower cover	1	302LC04710
Tray retainer	1*1	-
Sheet	2*2	302LC04660
Pin	2	303NS24410
M4 nut	2	3CY06030
M4 x 8 screw	7	7BB180408H
M4 x 14 screw	2	7BB607414H

*1: Not used in this model.
*2: Sheet x1 is not used.

Procedure

1. Press the power key on the operation panel to off. Make sure that the power indicator and the memory indicator are off before turning off the main power switch. And then unplug the power cable from the wall outlet.
2. Pull the paper conveying unit out.
3. Remove two screws and then remove the ISU right cover.
4. Remove the screw and five hooks and then remove the right upper cover.

*: Unlatch the stoppers with the rear bottom one first.

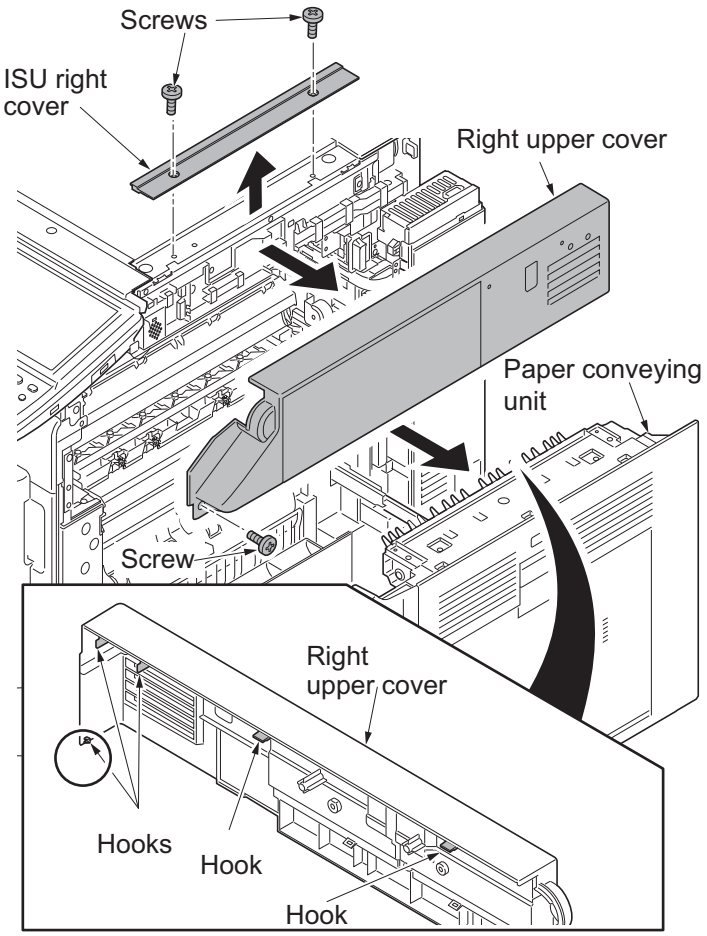

Figure 1-2-52

5. Remove nine screws and then remove the rear upper cover.

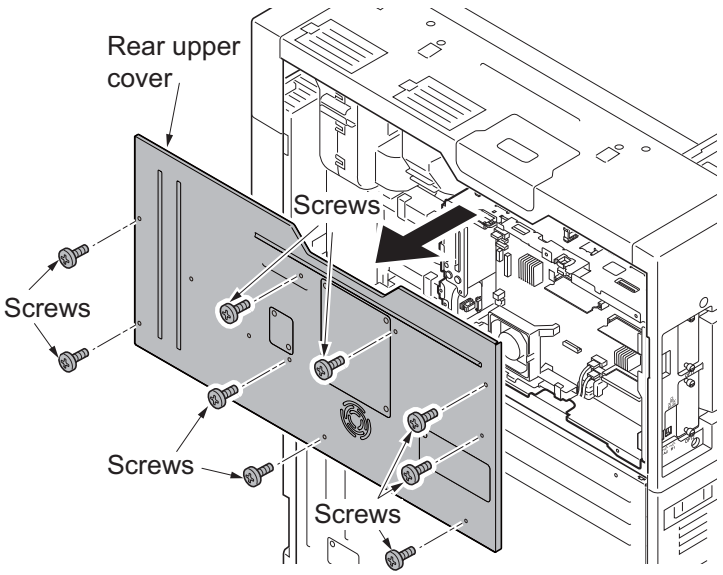

Figure 1-2-53

6. Release six wire saddles on the controller box.
7. Remove the wire holder.

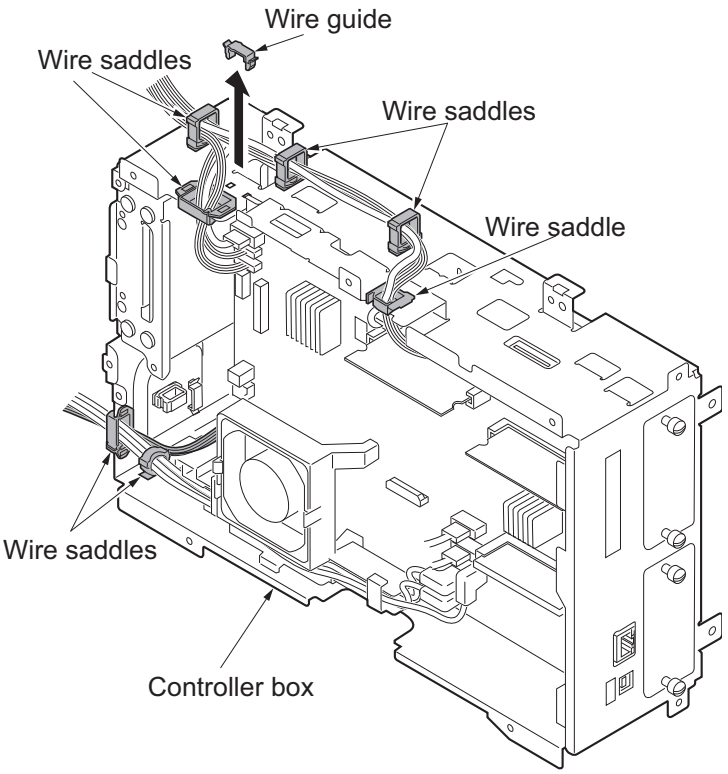

Figure 1-2-54

8. Remove the following connectors that connected to the main PWB from the outside of the control box.
   YC25
   YC11
   YC30
   YC42
   YC43(Connector type FFC)
   YC21(WH)
   YC22(WH)
   YC26(BK)
   YC6
   YC12

*: Before removing the connector type FFC YC43, unlock the lock by pressing the lock levers at both ends.

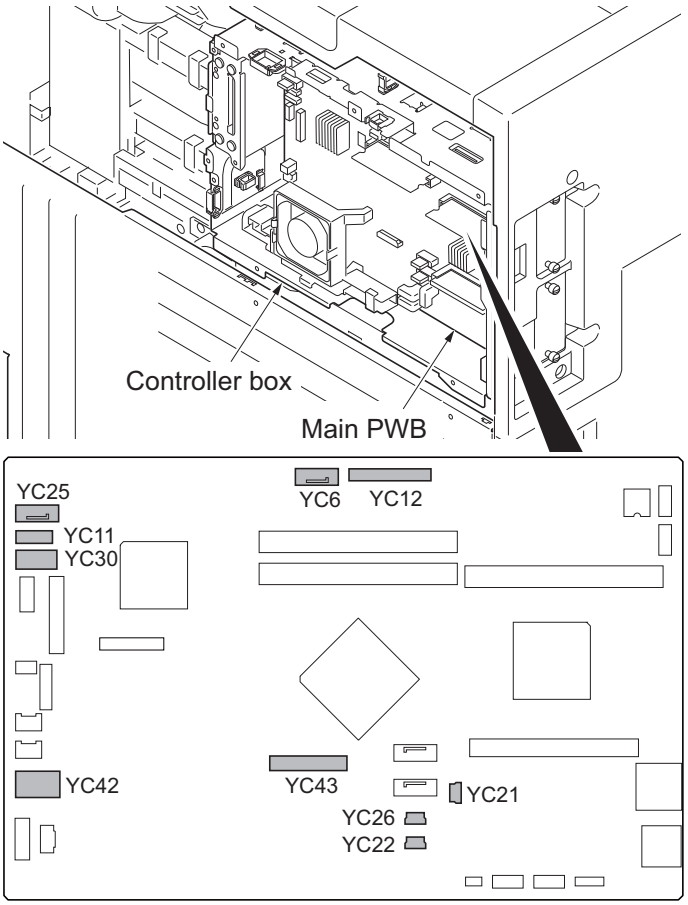

Main PWB

Figure 1-2-55

9. Remove five screws.
10. Unhook two hooks and then remove the controller box.

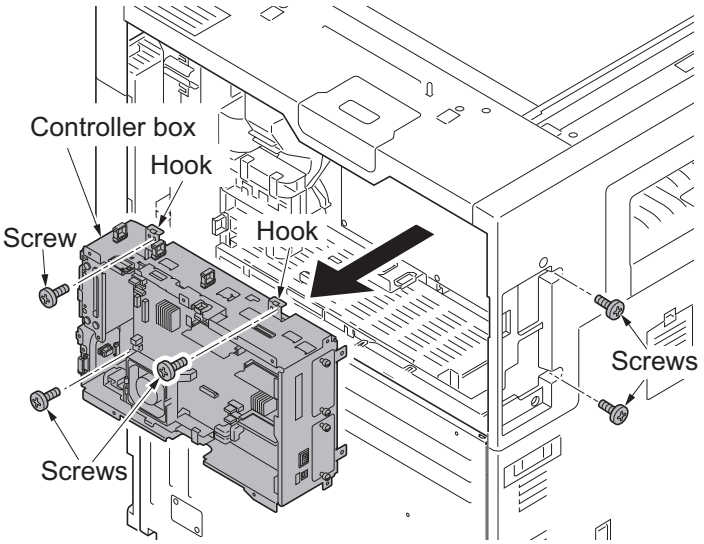

Figure 1-2-56

11. Cut out the aperture plate on the right upper cover using nippers.

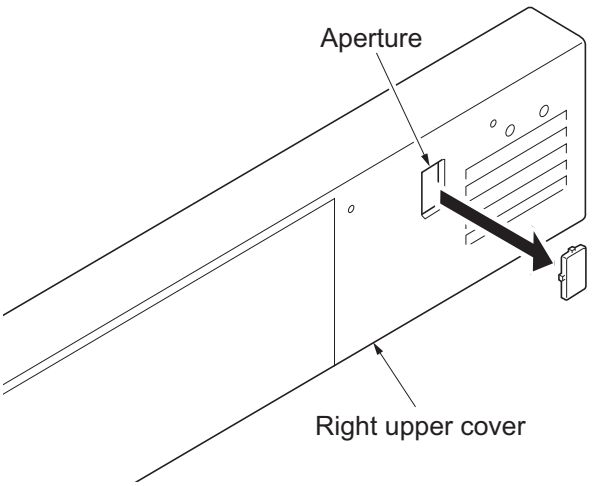

Figure 1-2-57

12. Mount two M4 nuts at the back of the right upper cover.
13. Fit the tray stay to the right upper cover using two M4 x 14 screws.

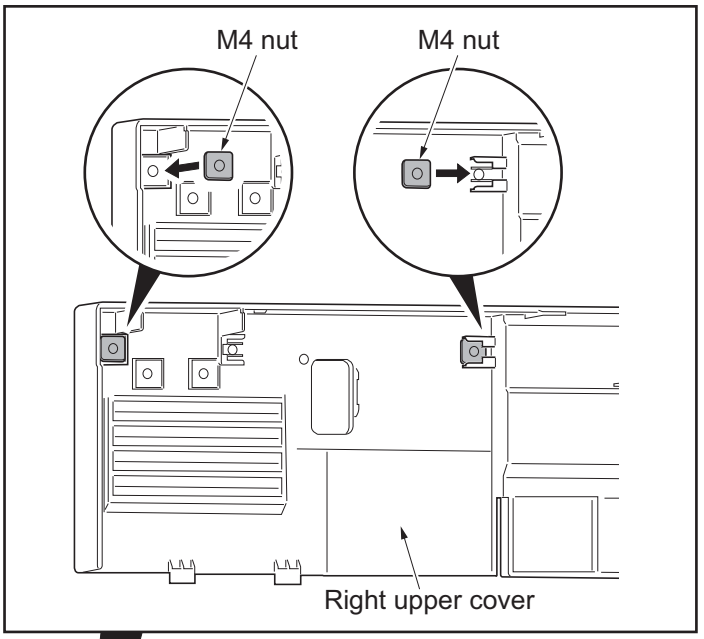

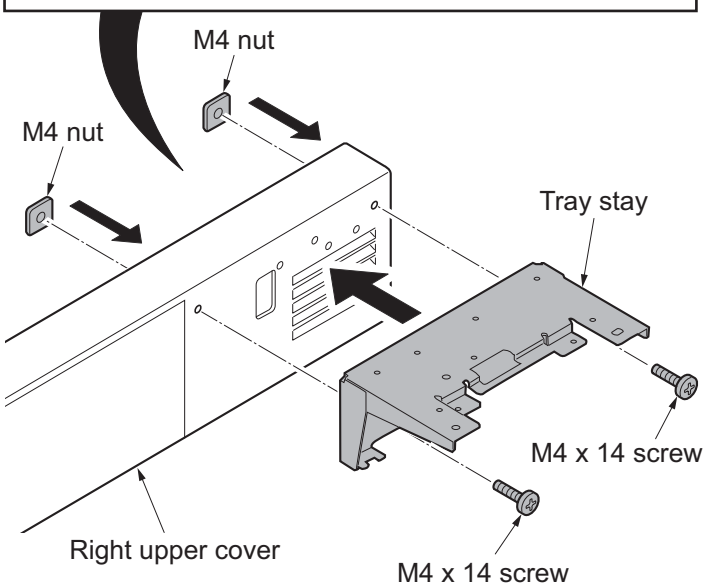

*: Secure the screws making sure that the nuts do not fall.

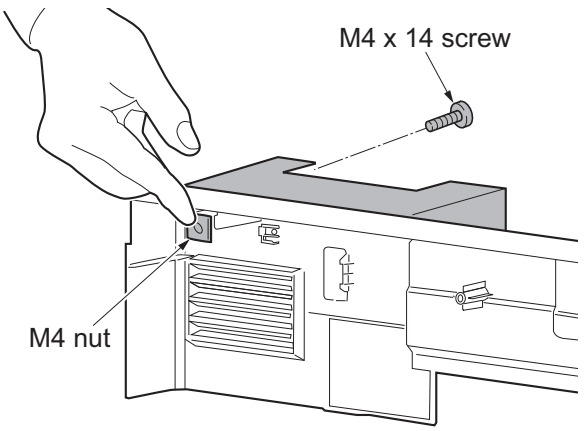

Figure 1-2-58

14. Snap in the tray mount to the tray stay and fix using two M4 x 8 screws.

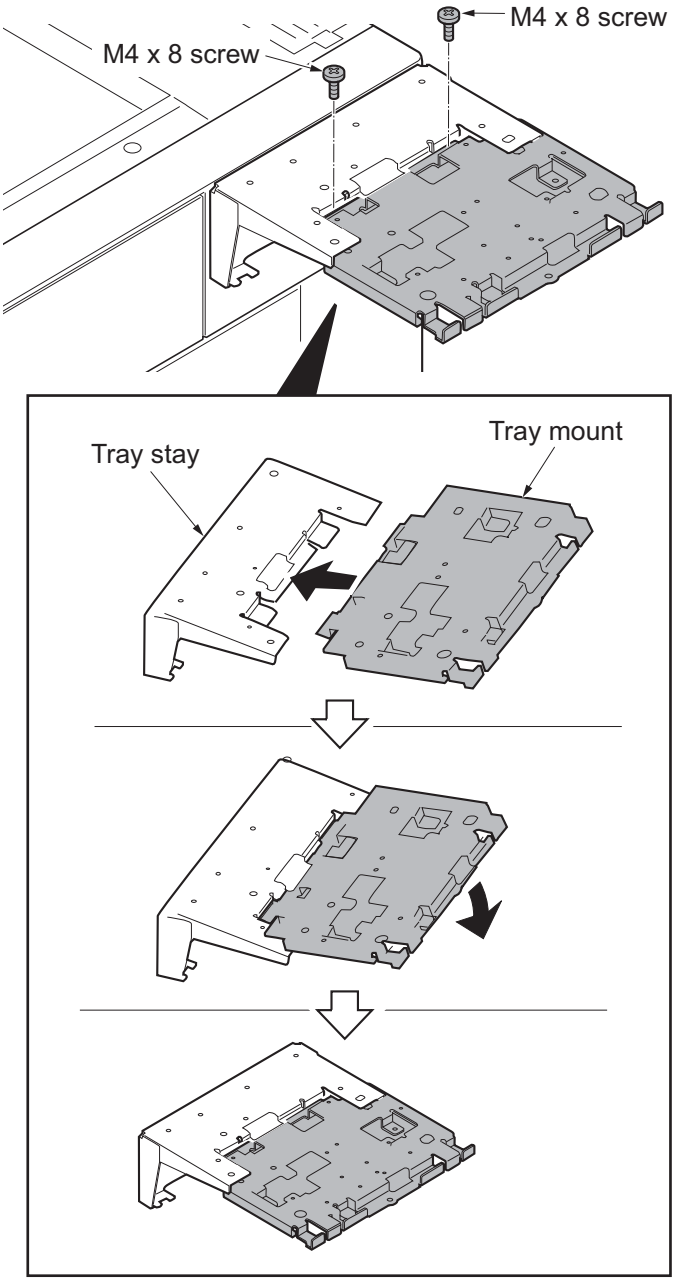

Figure 1-2-59

15. Cut out the aperture plate on the tray cover using nippers.

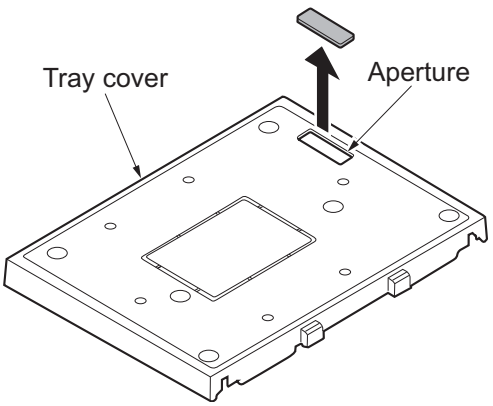

Figure 1-2-60

16. Pass the MK-2 signal cable through the aperture in the tray cover, tray stay and right upper cover.

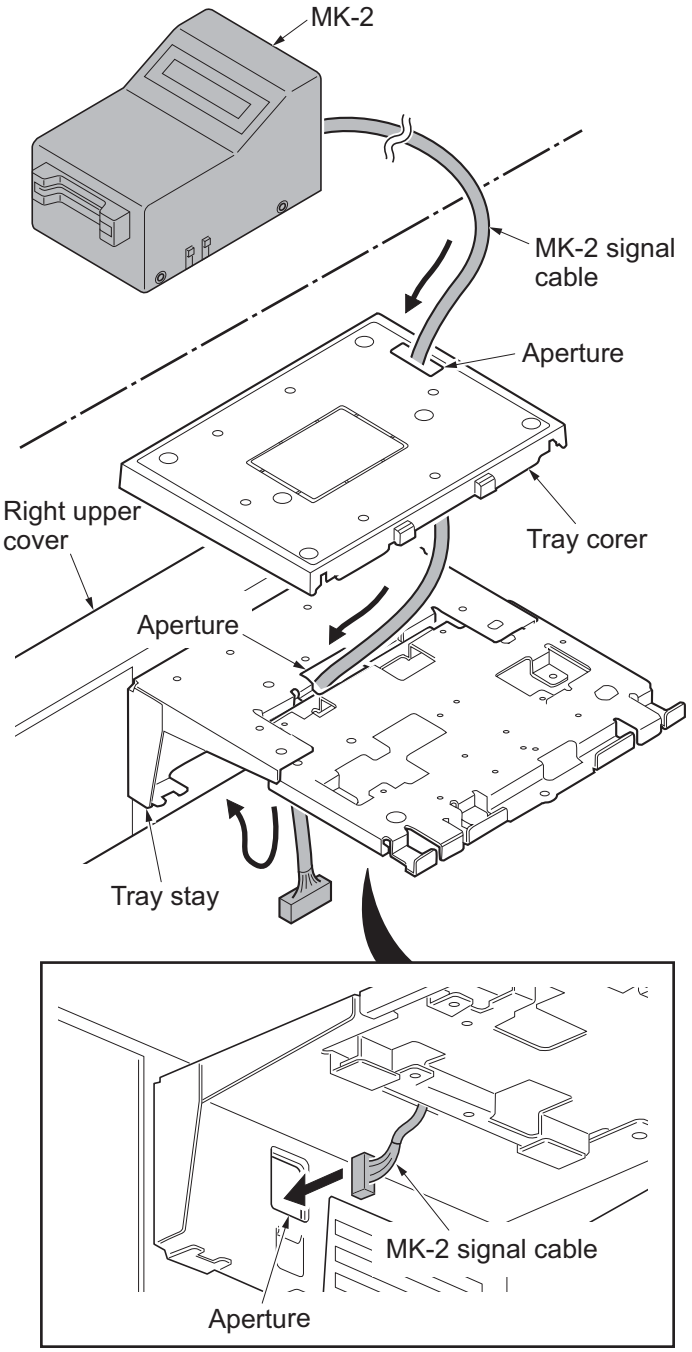

Figure 1-2-61

17. Connect the connector of the MK-2 signal cable to the connector YC25 on the engine PWB.
18. Remove the screw from the machine.
19. Fix the MK-2 signal cable to the ground terminal with the screw that was removed.

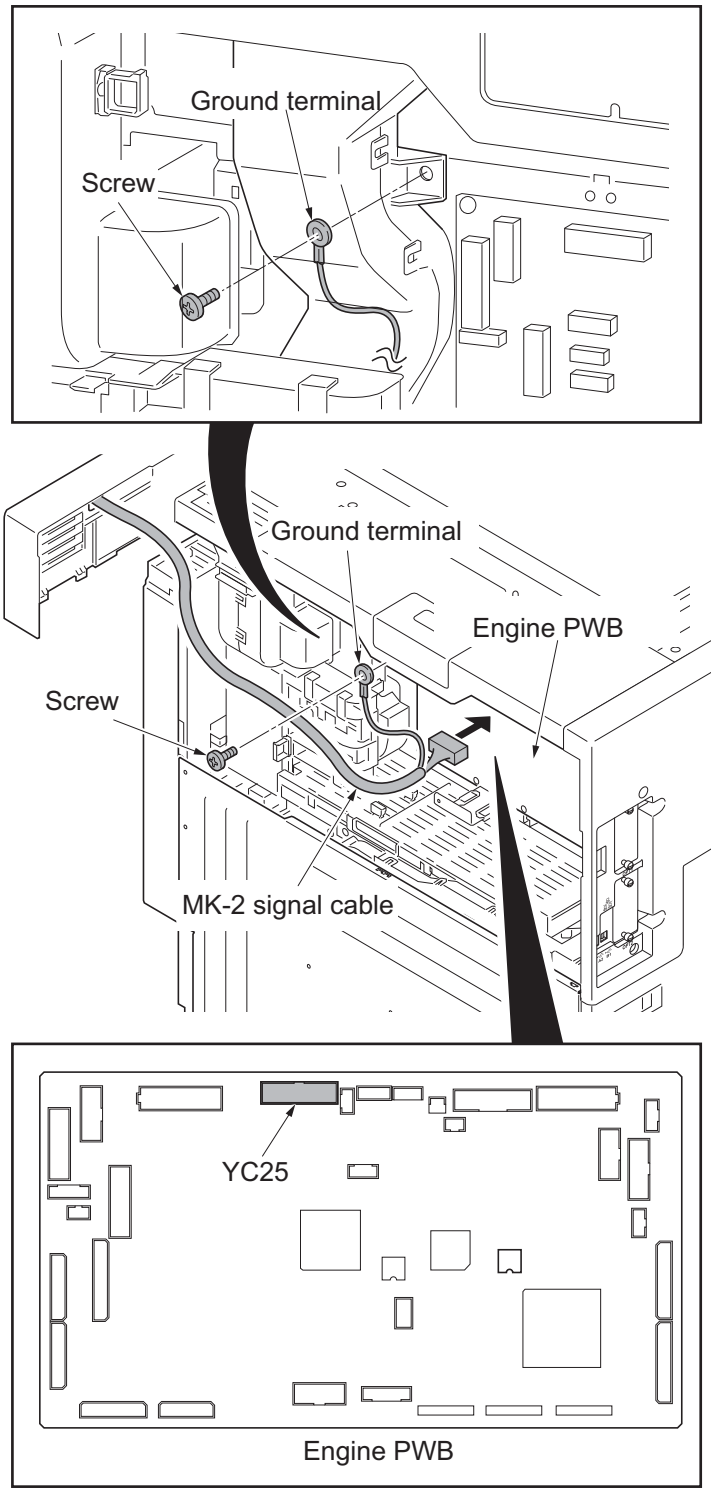

Figure 1-2-62

20. Remove three wire holders.
21. Route the MK-2 signal cable through the wire guide and fix it at three wire holders.
    *: Dress the MK-2 signal wire away from the scanner motor and fix.
22. Refit the controller box.
23. Refit the left upper cover and the rear upper cover.

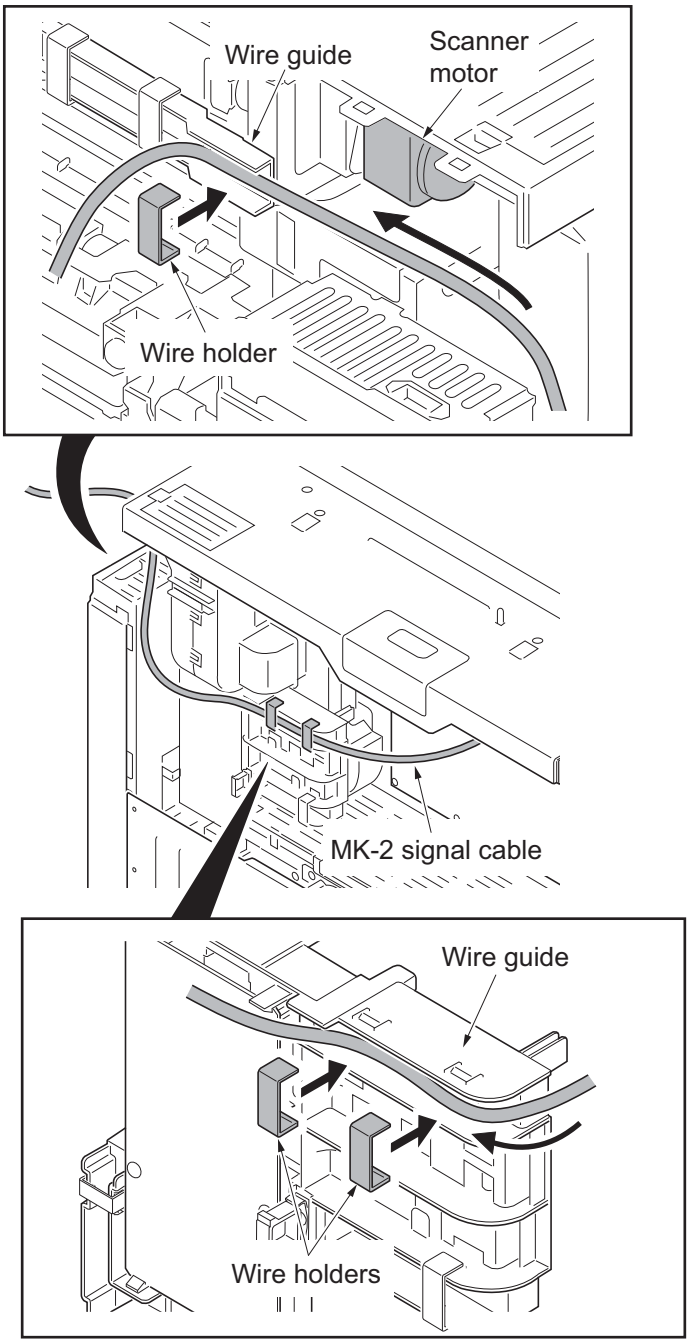

Figure 1-2-63

24. Fit the tray retainer to the machine using the M4 x 8 screw.
    *: The procedure described above is not required if an optional right job separator has been installed.

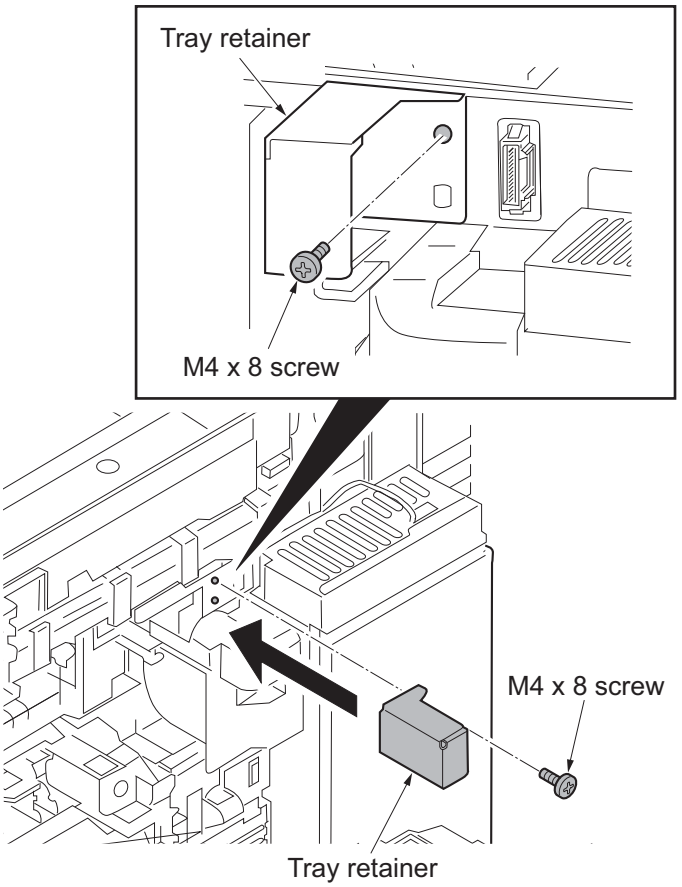

Figure 1-2-64

25. Refit the right upper cover.
26. Refit the ISU right cover.
27. Close the paper conveying unit.
28. Fit the tray cover to the tray stay using four M4 x 8 screws.

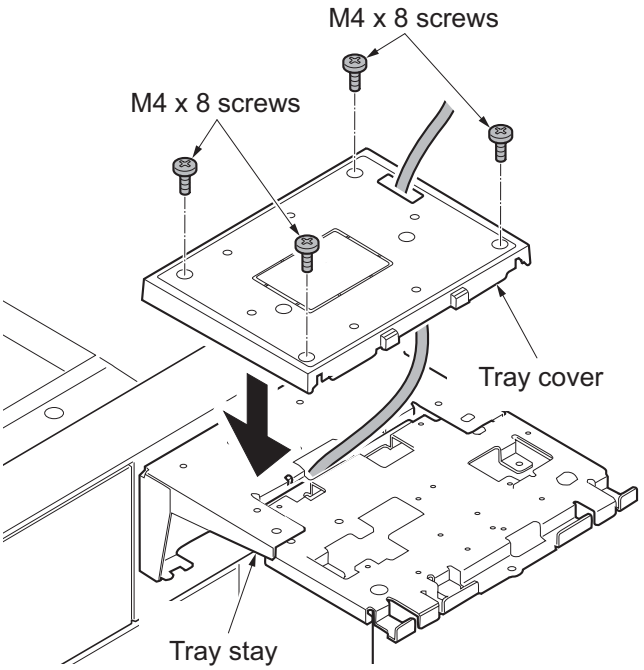

Figure 1-2-65

29. Remove the four screws securing the MK-2 cover; attach the MK-2 mount to the MK-2, and secure using the four screws.

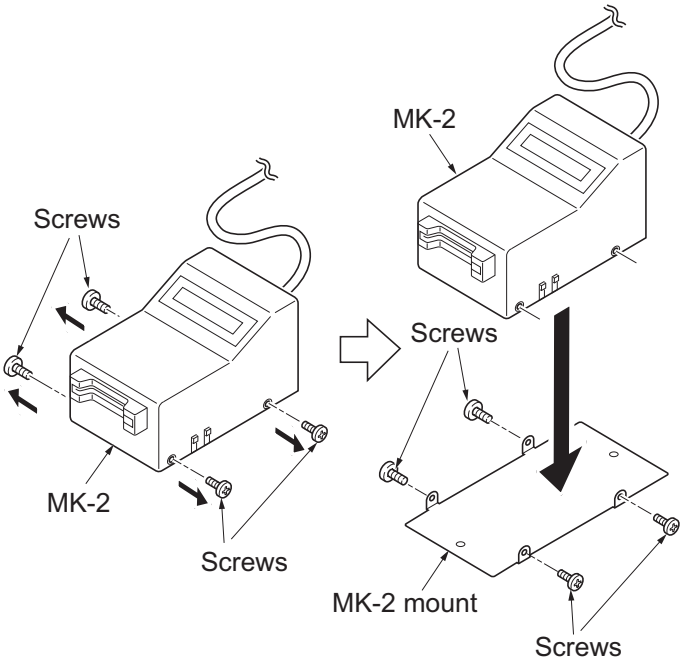

Figure 1-2-66

30. Fit the MK-2 to the document table using two M4 x 20 tap-tight S screws.
    *: Secure the screws to the location with mark “A”.

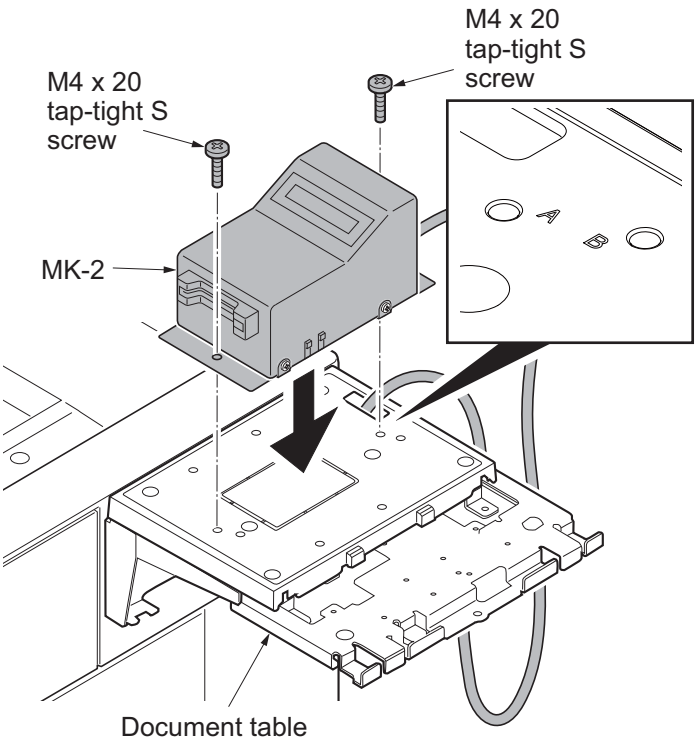

Figure 1-2-67

31. Fit the tray lower cover.
32. Secure the tray lower cover with two pins.

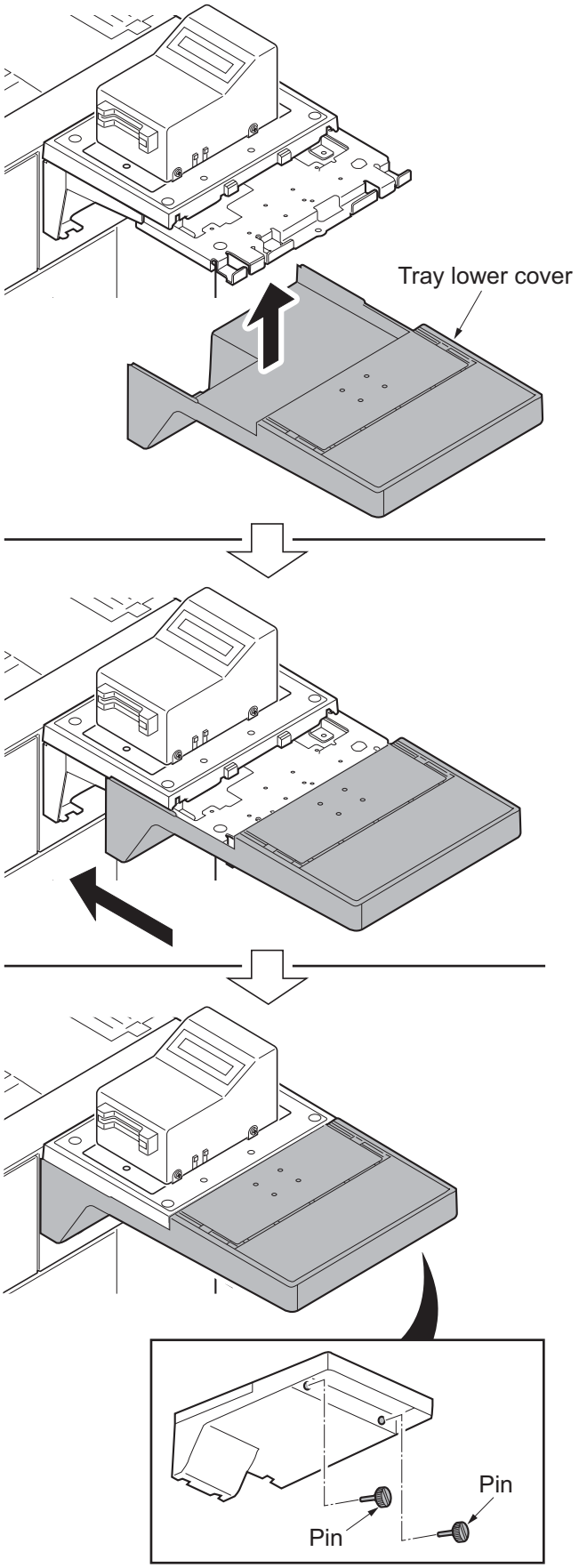

Figure 1-2-68

33. Adhere the sheet onto right side of the document table.

34. Turn the main power switch on and enter the maintenance mode.
35. Run maintenance item U204 and select [Key-Card] (see page 1-3-123).
36. Exit the maintenance mode.

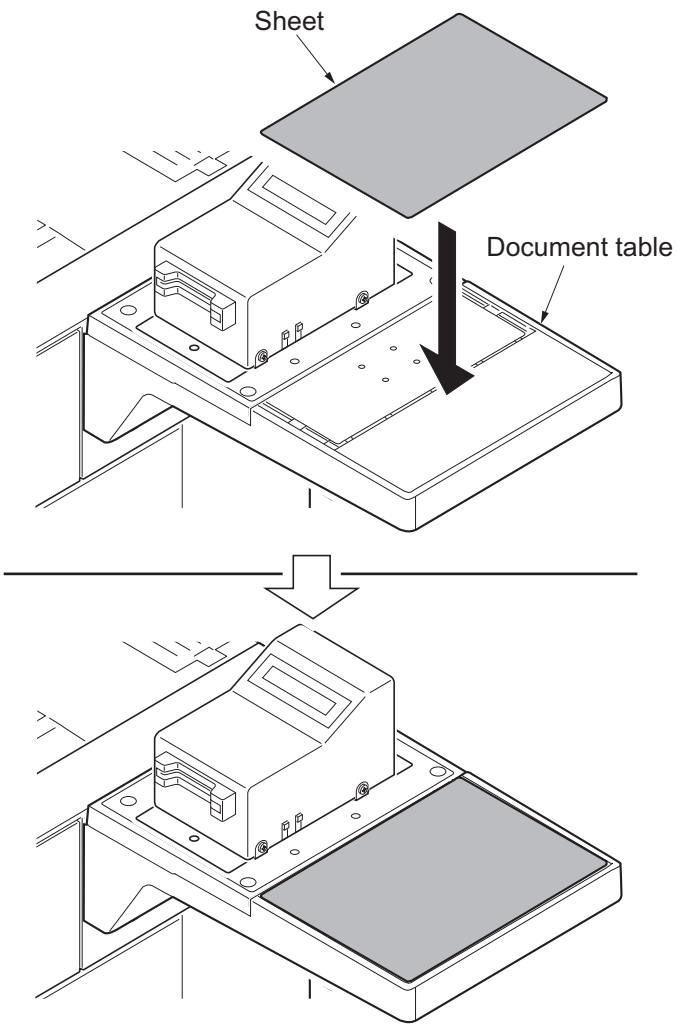

Figure 1-2-69

1-2-5 Installing the KMAS (option for japan only)

KMAS installation requires the following parts:

Using the PHS module

Parts	Quantity	Part.No.
PHS module	1	HM000080 (option)
PHS signal cable	1	023CK200 (option)
KMAS interface PWB	1	023CK000 (option)
M3 x 16 bronze binding screw	2	B3323160
Ferrite core	1	2A027770
Clamp	1	M2105910
KMAS wire set	1	302K994610

Supplied parts of KMAS wire set (302K994610):

Parts	Quantity	Part.No.
KMAS wire	1	302K946AG0
Spacer A	1	7YZM510009++H01
Spacer B	3	7YZM510011++H01

Using a modem

Parts	Quantity	Part.No.
RS-232C signal cable	1	303CK60011
RS-232C relay cable	1	303CK60041
KMAS interface PWB	1	023CK000 (option)

Procedure

To fix KMAS, perform the following procedure:

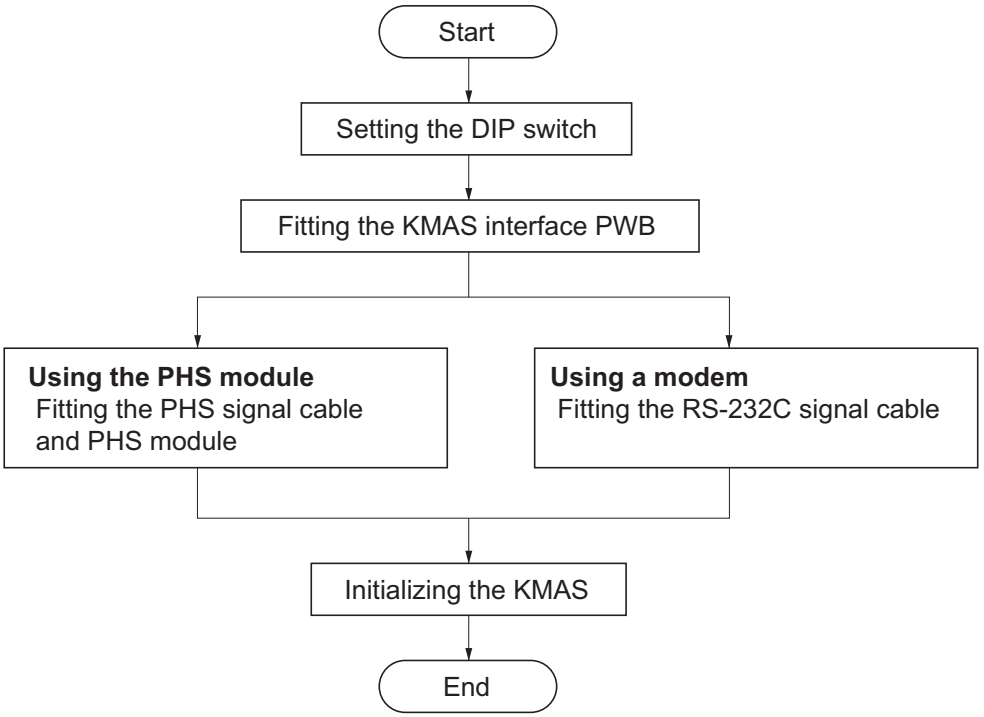

Setting the DIP switch

1. Configure DIP switches 1 to 4 on the KMAS interface board as follows:

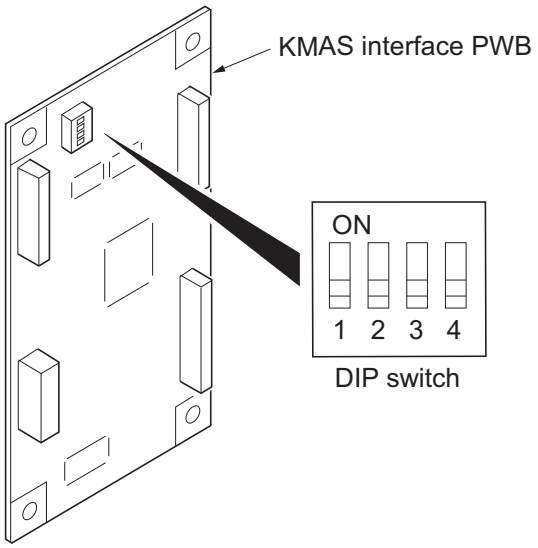

Figure 1-2-70

DIP SW No.	Description	Remarks
1	PHS module/modem switching ON: Use modem OFF: Use PHS module	
2	Modem outgoing switching ON: Pulse OFF: Tone	This is required when modem is used.
3	Communication speed switching with the device ON: 9600bps OFF: 19200bps	Set to OFF.
4	Communication log when automatically notifying service calls Switching messages ON: Message is fixed OFF: Normal message is used	When ON, the message is “Call a service representative.” When OFF, the message will vary depending on communication status. To setup the system with automatic accounting only, ON may be set.

Fitting the KMAS interface PWB

2. Remove nine screws and then remove the rear upper cover.

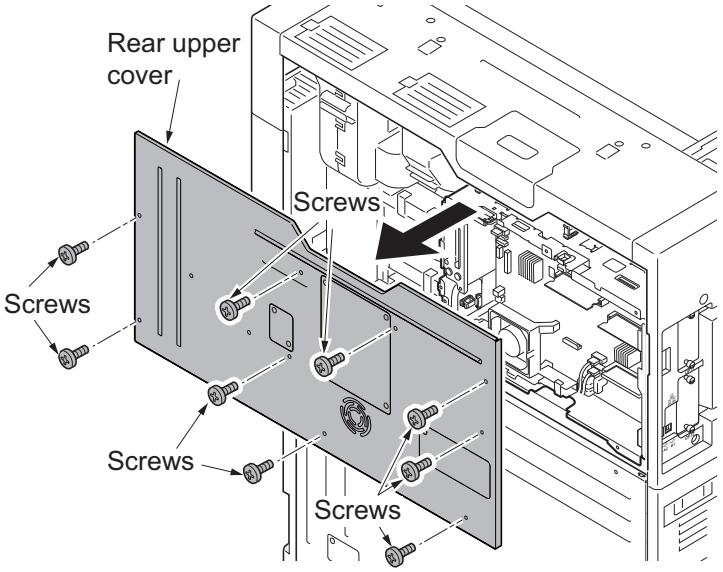

Figure 1-2-71

3. Attach one spacer A and three spacers B to the side of the controller box.

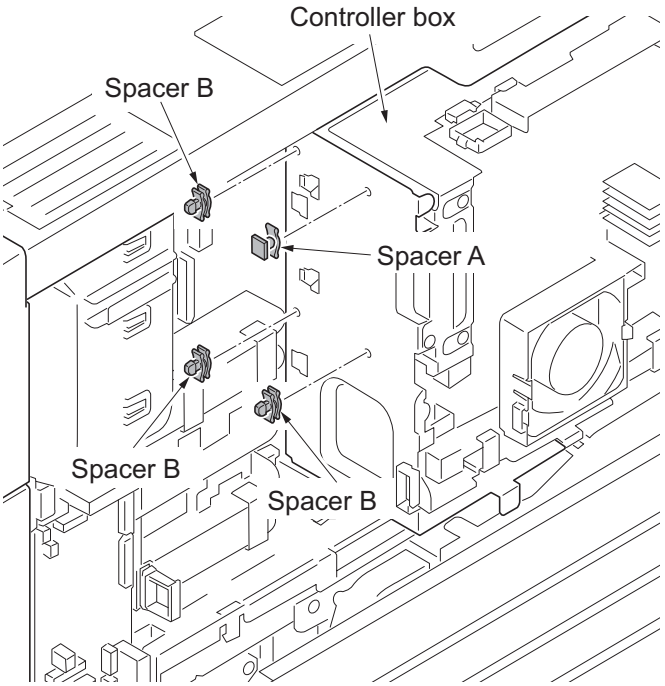

Figure 1-2-72

4. Insert the KMAS interface PWB to three spacers B.

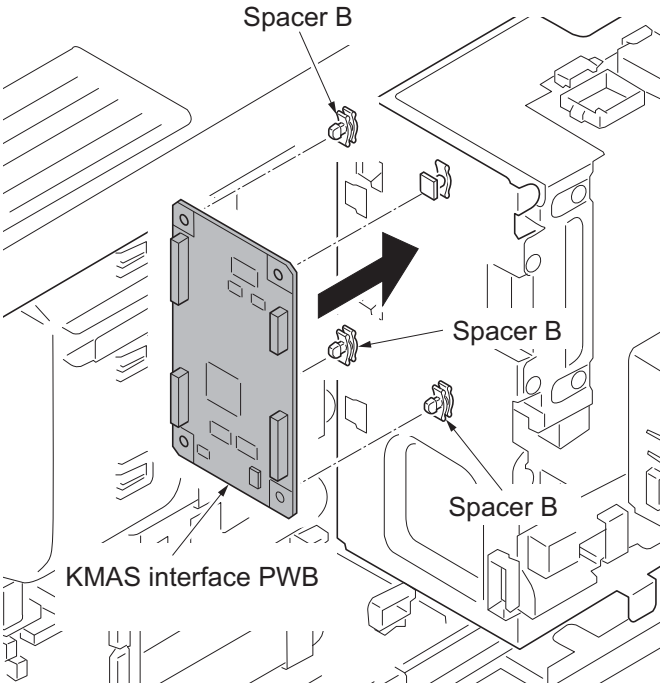

Figure 1-2-73

5. Connect the connector of the KMAS wire to the connector YC1 on the KMAS PWB.
6. Connect the connector of the KMAS wire to controller fan motor, YC7 and YC23 on the main PWB.

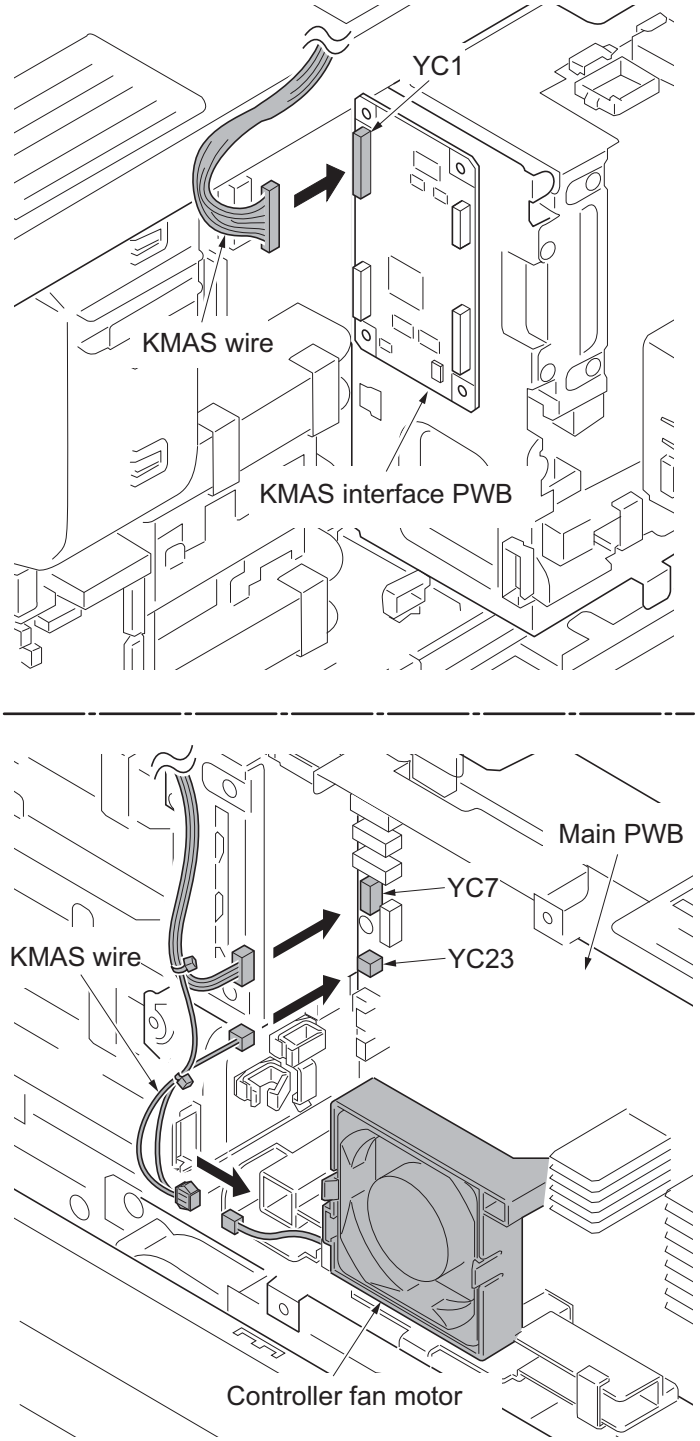

Figure 1-2-74

7. Pass the KMAS wire through the edging of the controller box and wire saddle and then fasten the KMAS wire.

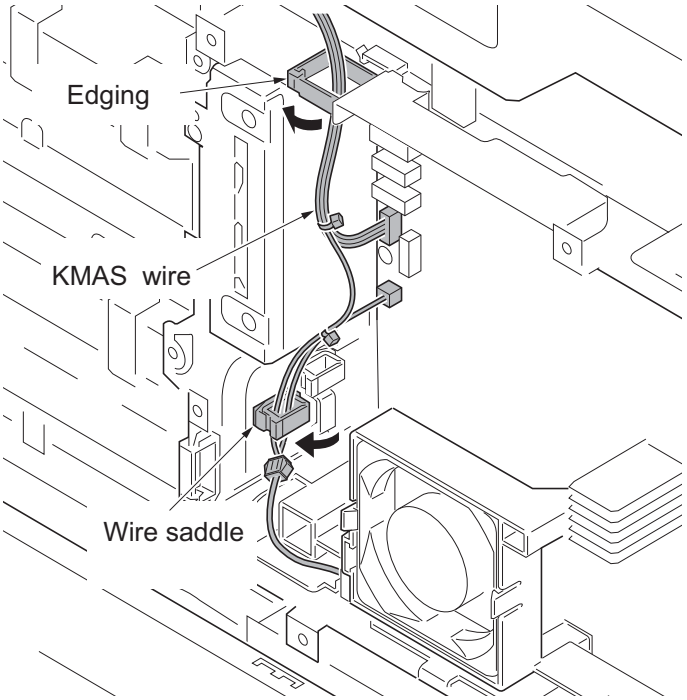

Figure 1-2-75

Fitting the PHS signal cable and PHS module

8. Remove two screws and then remove the lid from the rear upper cover.
9. Pass the PHS signal cable through the aperture in the rear upper cover.
10. Secure the PHS signal cable to rear upper cover with two screws.

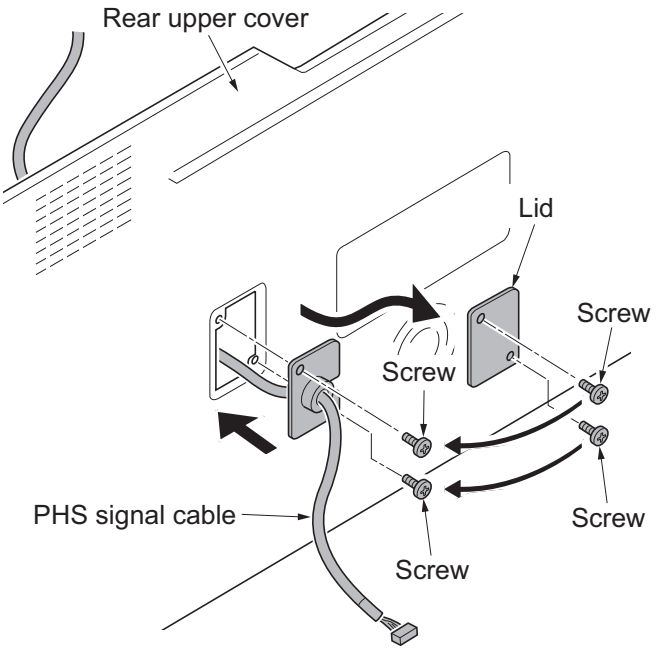

Figure 1-2-76

11. Connect the connector of the PHS signal cable to the connector YC2 on the KMAS interface PWB.
12. Refit the rear upper cover.

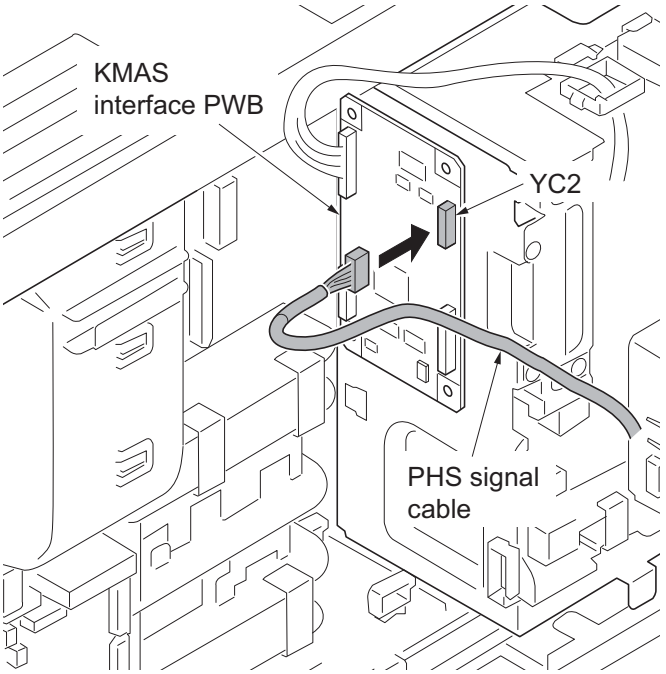

Figure 1-2-77

13. Fit the PHS module to rear upper cover using two M3 x 16 screws.

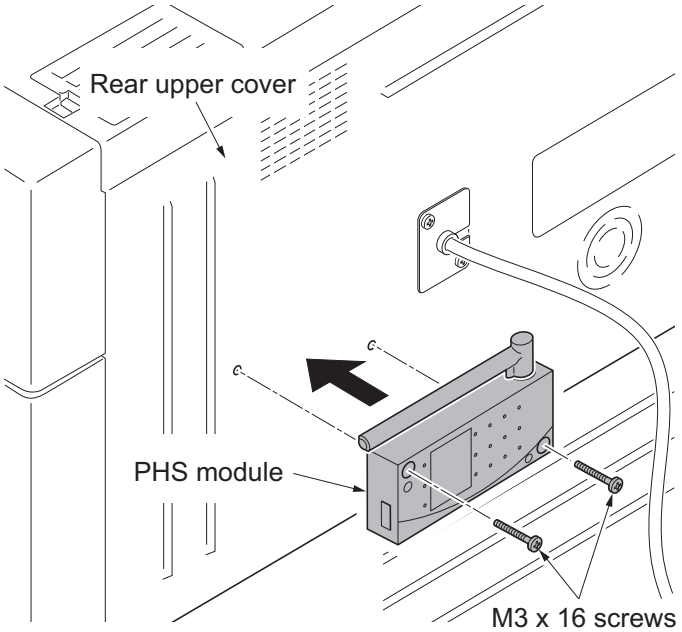

Figure 1-2-78

14. Wrap the PHS signal cable around the ferrite core a turn.
15. Connect the connector of the PHS signal cable to PHS module.
16. Fit the clamp to PHS signal cable.
17. After using alcohol to clean the rear upper cover, adhere the clamp to rear upper cover.

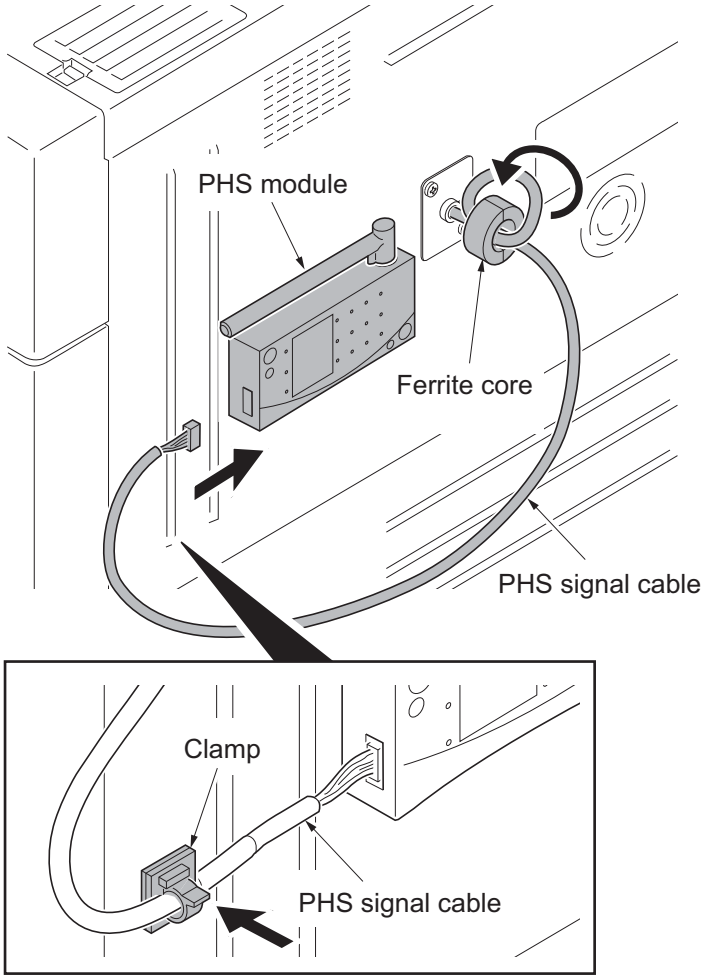

Figure 1-2-79

Fitting the RS-232C signal cable

1. By referring to the instructions given to fix the PHS signal wire, insert the connector at the end of the RS-232C relay cable to the YC3 connector on the KMAS interface PWB.
   If the wire length is short, use a RS-232C extension cable.
2. Connect the RS-232C signal cable to the modem.

Initializing the KMAS

1. Turn the main power switch on and enter the maintenance mode.
2. Run maintenance item U202 and Perform [Init/Set TEL No.] (see page 1-3-121).
3. Exit the maintenance mode.

1-2-6 Installing the coin vender (option for japan only)

Coin vender installation requires the following parts:

Parts	Quantity	Part.No.
Coin vender	1	1905H99JP0 (option)
Vender wire	1	Supplied with coin vender
Vender base	1	
M4 x 6 screw	4	
Ferrite core	1	
Clamp	1	
Vender signal cable	1	302K946AE0

Procedure

1. Press the power key on the operation panel to off. Make sure that the power indicator and the memory indicator are off before turning off the main power switch. And then unplug the power cable from the wall outlet.
2. Fit the vender base to coin vender using four M4 x 6 screws.

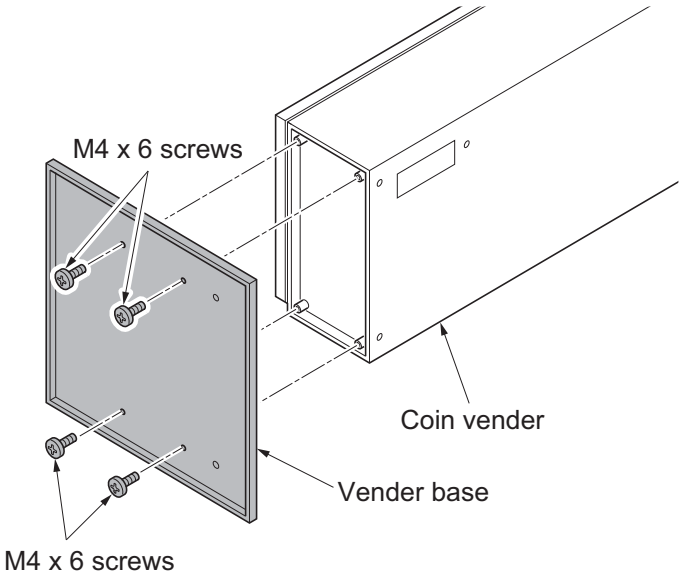

Figure 1-2-80

3. Remove nine screws and then remove the rear upper cover.

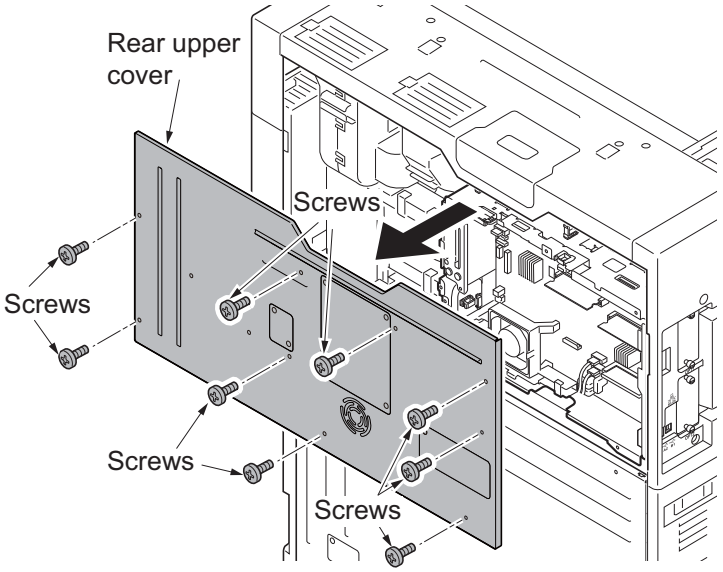

Figure 1-2-81

4. Remove eight screws.
5. Release two hanging parts and then remove the rear lower cover.

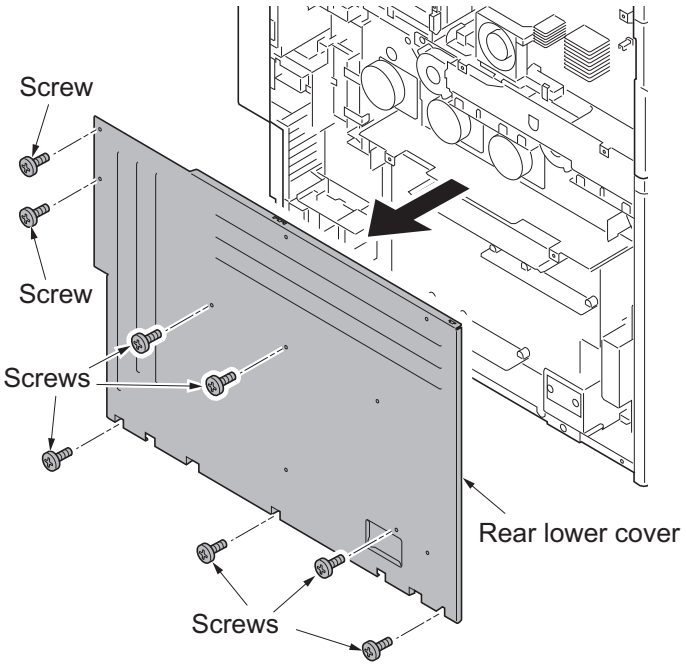

Figure 1-2-82

6. Remove two screws and then remove the lid.

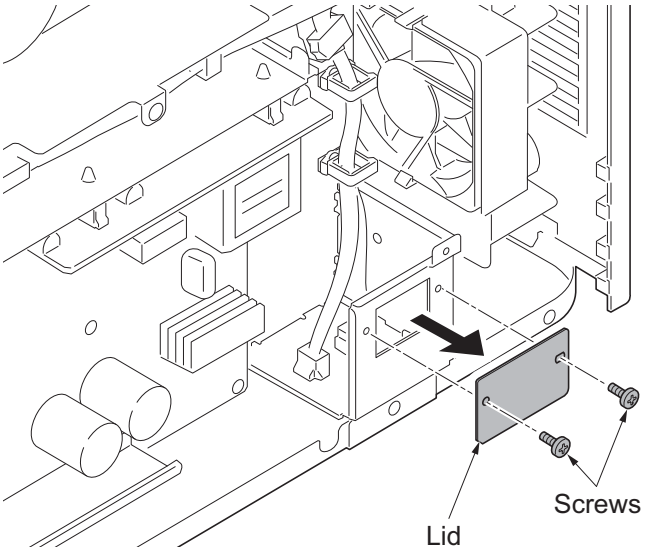

Figure 1-2-83

7. Connect the connector of the vender signal cable to the connector YC23 on the engine PWB.
8. Pass the vender signal cable through the wire guide and ten wire saddles and then fasten the cable.

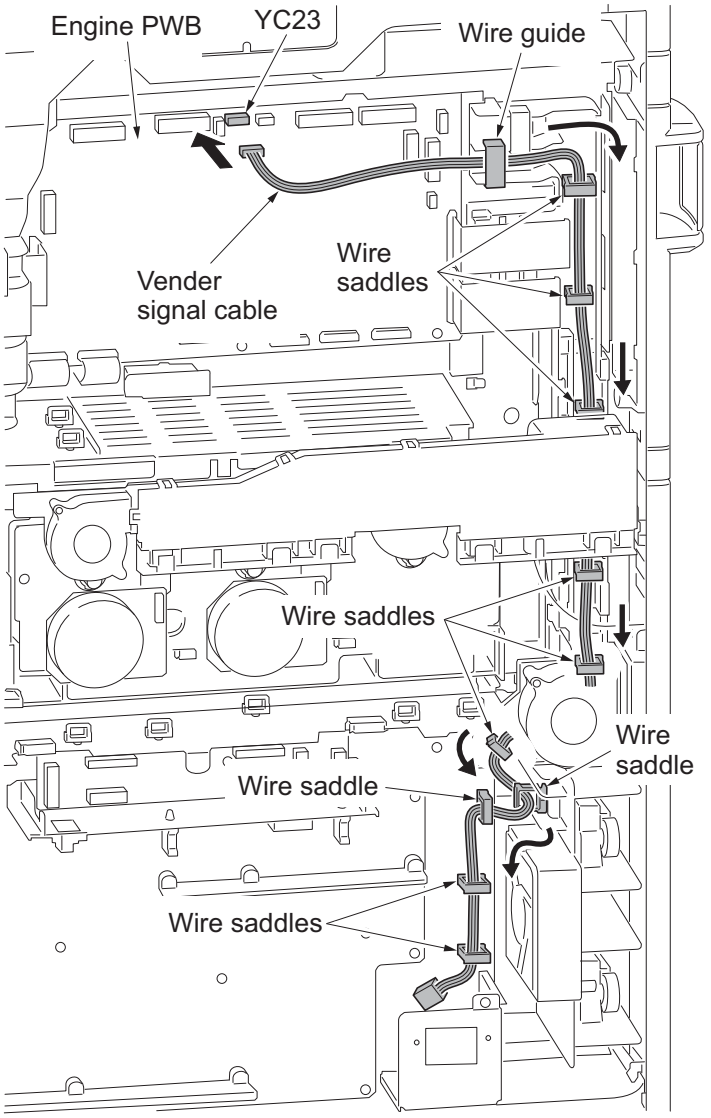

Figure 1-2-84

9. Pass the vender wire through the aperture in the IF mount.
10. Secure the vender wire with two screws removed in step 6.
11. Secure the ground terminal of the vender wire to rear frame with the screw.
12. Connect the connector of the vender wire to connector of the vender signal cable.

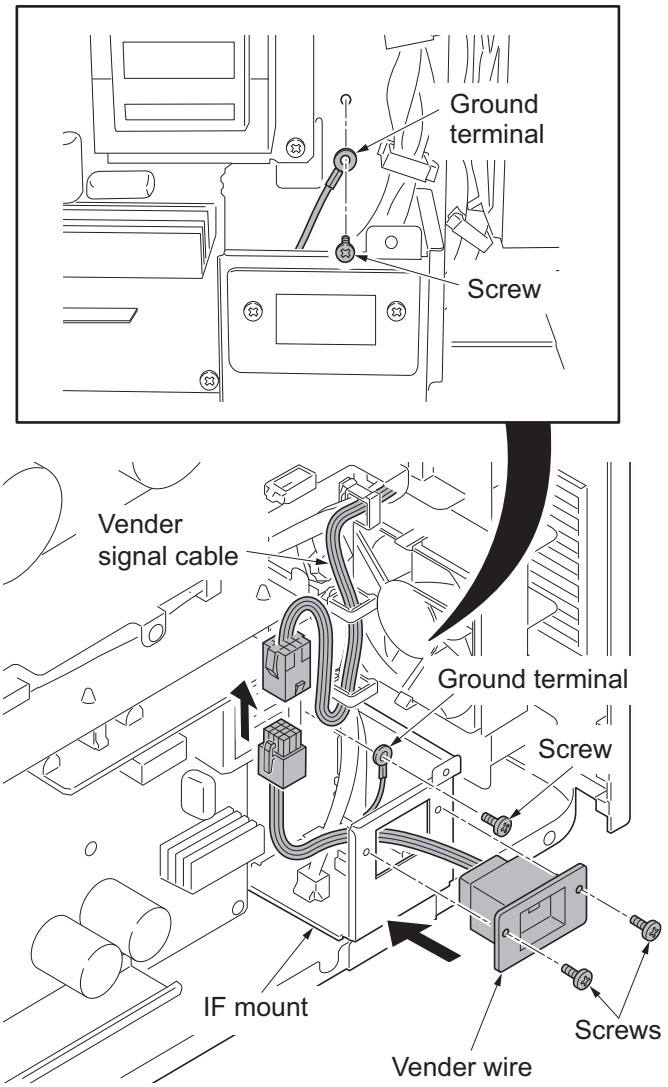

Figure 1-2-85

13. Refit the rear lower and upper covers.
14. Connect the signal cable of coin vender to connector of the vender wire.

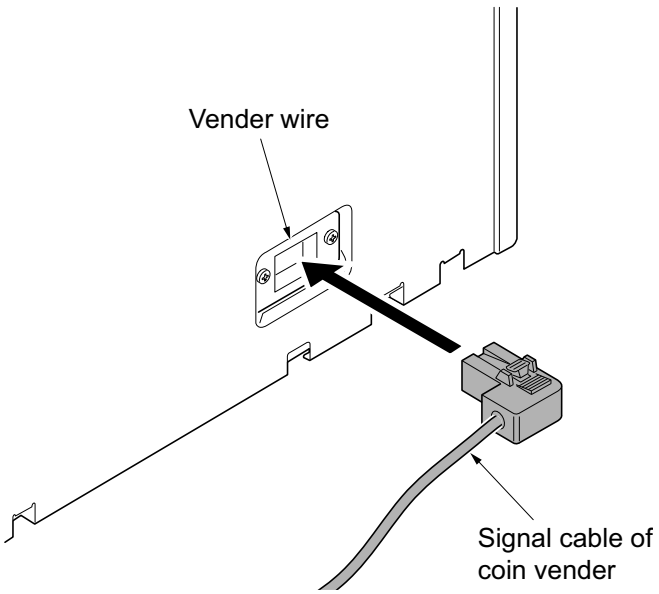

Figure 1-2-86

15. Fit the ferrite core to signal cable of coin vender.
16. Fit the clamp to signal cable of coin vender.
17. Remove a screw from the coin vender and fix the coin vender with a clamp.

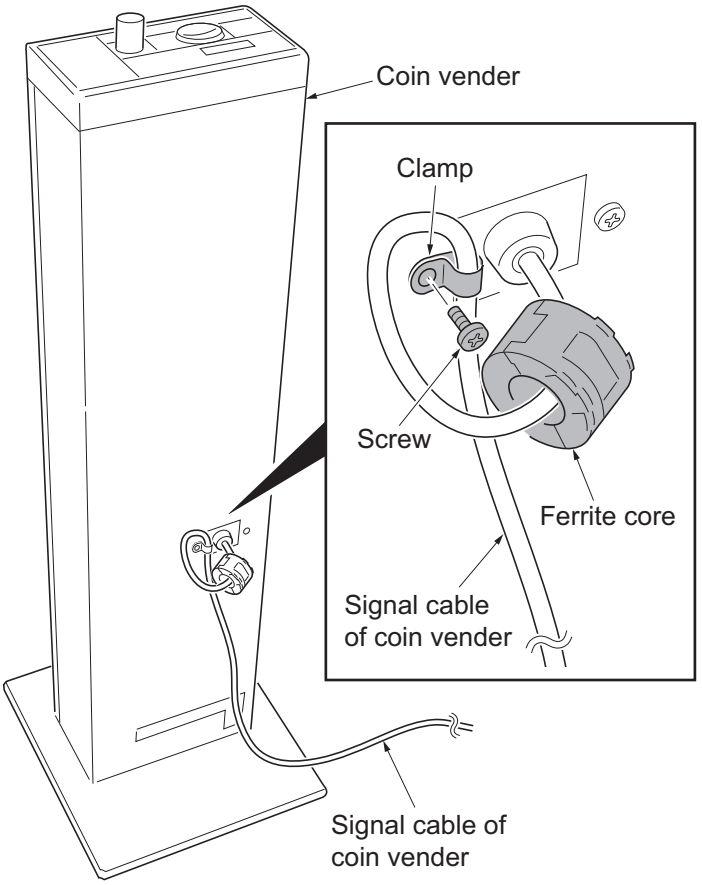

Figure 1-2-87

18. Affix the price size decal at the right side of the coin vender operation panel.

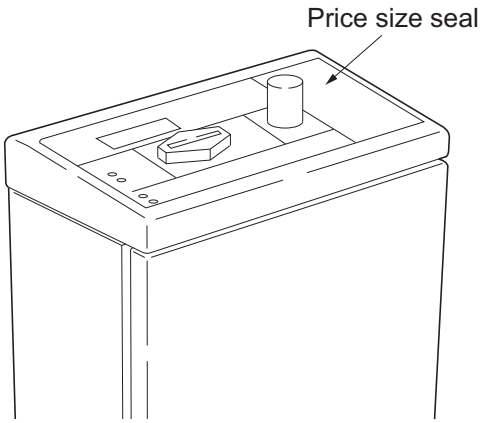

Figure 1-2-88

19. Turn the main power switch on and enter the maintenance mode.
20. Run maintenance mode U206 and activate 'Coin vender is installed.' Continue configuring the coin vender required (see page 1-3-124).
21. Exit the maintenance mode.

1-2-7 Installing the cassette heater (option)

Cassette heater installation requires the following parts:

Parts	Quantity	Part.No.
Cassette heater set (120V)	1	302K994931
Cassette heater set (240V)	1	302K994941

Supplied parts of cassette heater set (302K994931):

Parts	Quantity	Part.No.
Cassette heater (120V)	1	302H794620
Wire saddle	3	7YZM610001++H01
Connector cover	1	303NF04140
Laberl caution	1	302KP34220
M3 x 8 tap-tight S screw	2	7BB700308H
M4 x 8 tap-tight S screw	1	7BB700408H

Supplied parts of cassette heater set (302K994941):

Parts	Quantity	Part.No.
Cassette heater (240V)	1	302H794610
Wire saddle	3	7YZM610001++H01
Connector cover	1	303NF04140
Laberl caution	1	302KP34220
M3 x 8 tap-tight S screw	2	7BB700308H
M4 x 8 tap-tight S screw	1	7BB700408H

Procedure

1. Press the power key on the operation panel to off. Make sure that the power indicator and the memory indicator are off before turning off the main power switch. And then unplug the power cable from the wall outlet.
2. Pull the cassette 1 forward.

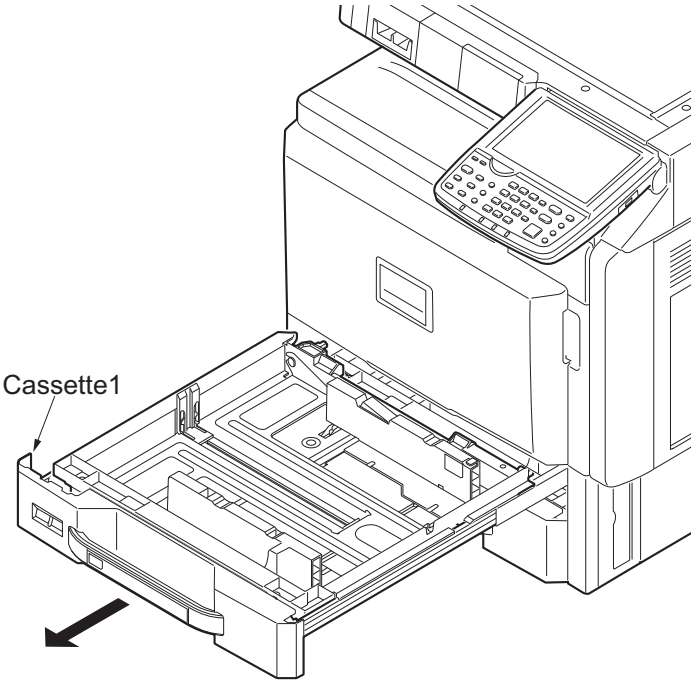

Figure 1-2-89

3. Pull up the cassette.

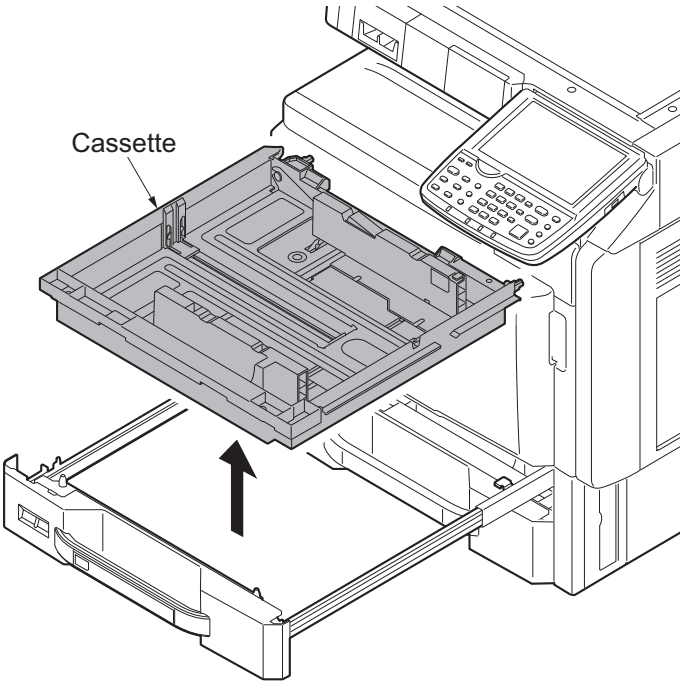

Figure 1-2-90

4. Remove the cassette 2 in the same manner as above.

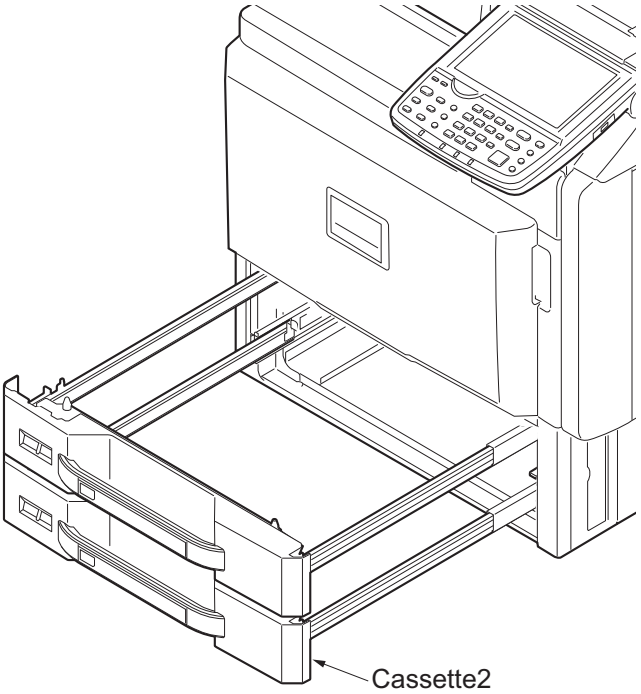

Figure 1-2-91

5. Fit three wire saddles on the bottom frame of the machine.
6. Fit the cassette heater using two M3 x 8 screws.

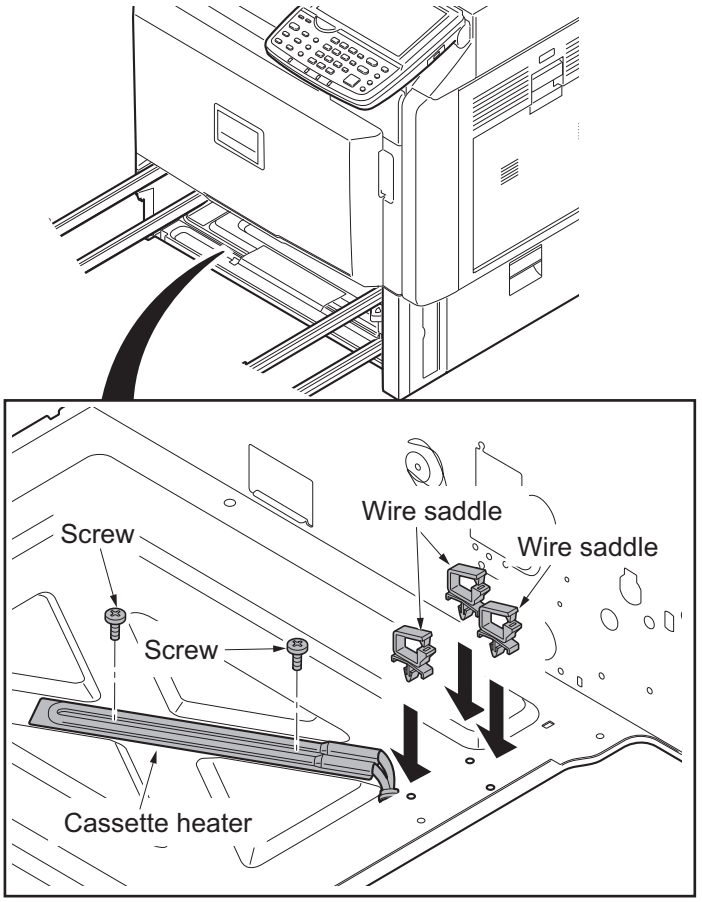

Figure 1-2-92

7. Pass the wire of the cassette heater through three wire saddles and then fasten the wire.
*: Route the wire so that it do not disturb opening and closing the cassettes.
8. Connect the connector of the cassette heater to the connector in the rear frame of the machine.

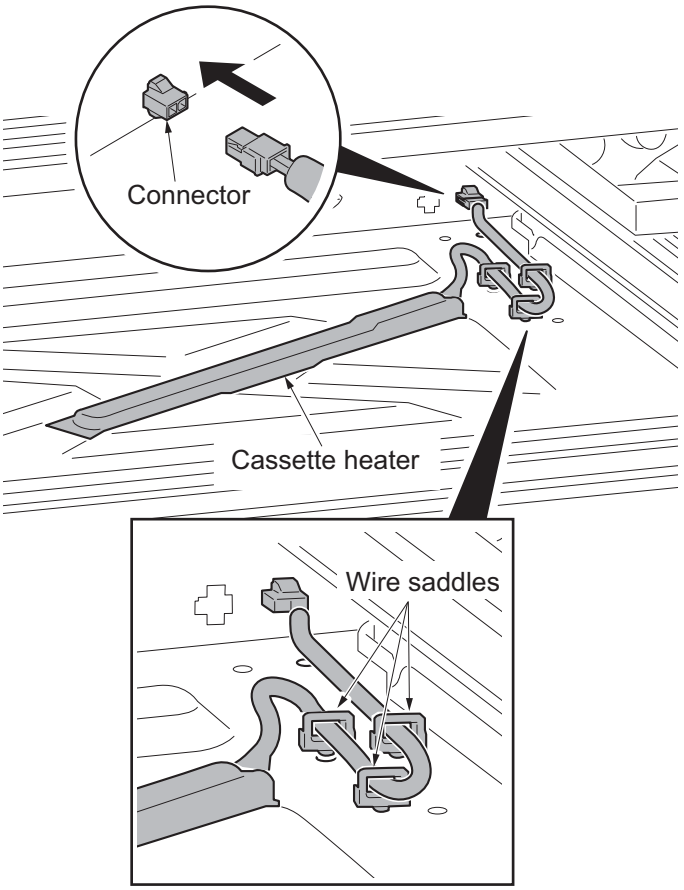

Figure 1-2-93

9. Insert two hooks of the connector cover to the holes of base of the machine each.
10. Install the connector cover by using a M4 x 8 screw.

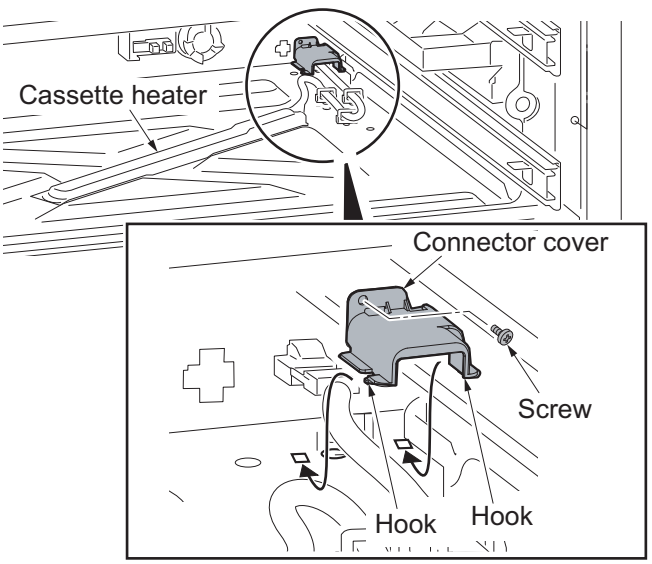

Figure 1-2-94

11. Adhere the caution label after wiping the bottom frame of this side of cassette heater with alcohol.

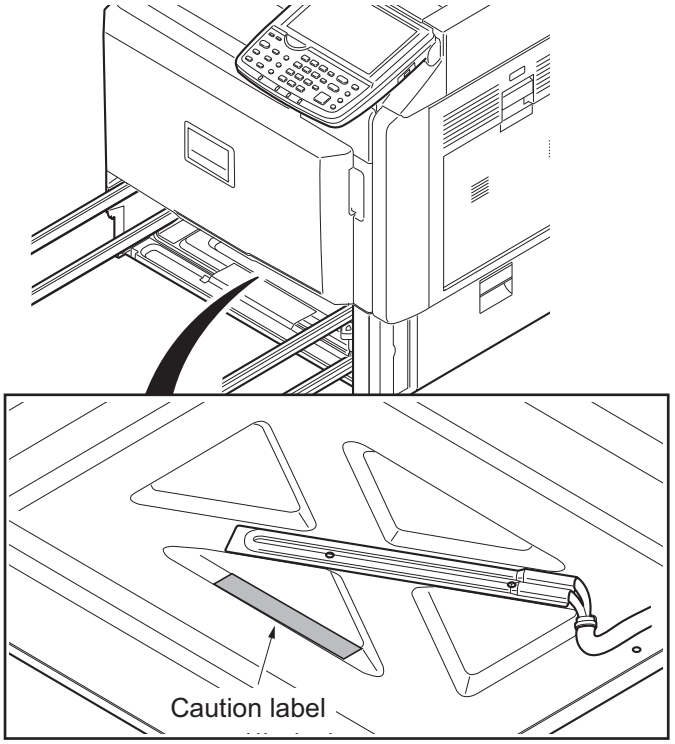

Figure 1-2-95

12. Replace the cassette 1 and 2.

*: Perform the maintenance mode U327 to configure the cassette heater control settings after a cassette heater was installed.

1-2-8 Installing the gigabit ethernet board (option)

Gigabit ethernet board installation requires the following parts:

Parts	Quantity	Part.No.
Gigabit ethernet board	1	1505JV0UN0 (option)

Procedure

1. Press the power key on the operation panel to off. Make sure that the power indicator and the memory indicator are off before turning off the main power switch. And then unplug the power cable from the wall outlet.
2. Remove two pins and then remove the slot cover of the OPT2.

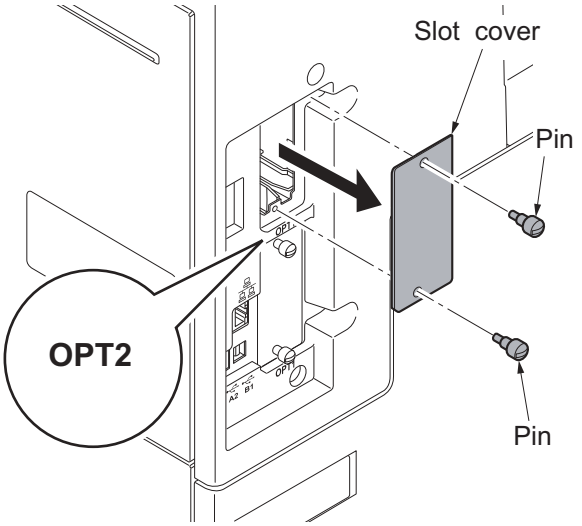

Figure 1-2-96

3. Insert the gigabit ethernet board along the groove in OPT2 and secure the board with two pins that have been removed in step 2.

*: Do not directly touch the gigabit ethernet board terminal.
Hold the top and bottom of the gigabit ethernet board, or the projection of the board to insert the gigabit ethernet board.

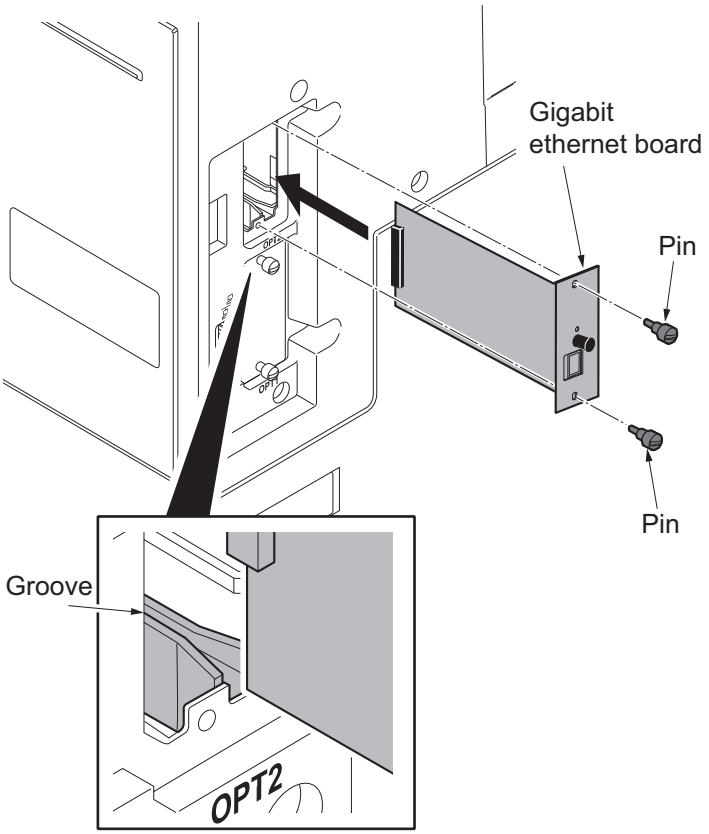

Figure 1-2-97

4. Plug the modular connector cable into the line terminal,

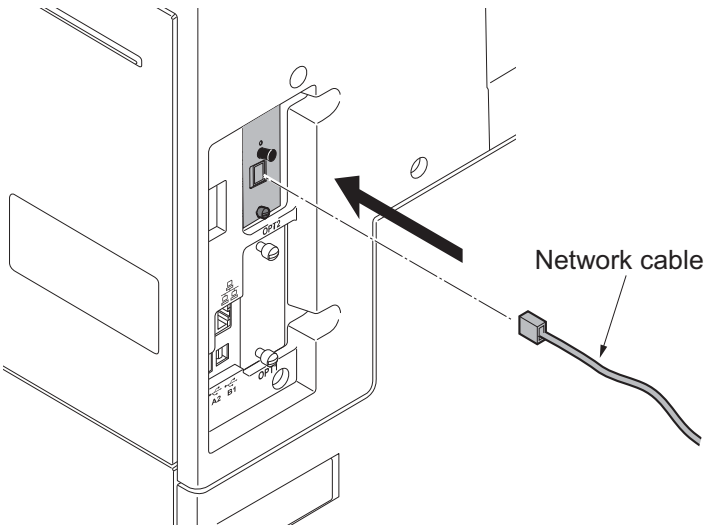

Figure 1-2-98

1-2-9 Installing the Wire-less interface kit (option)

Wire-less interface kit installation requires the following parts:

Parts	Quantity	Part.No.
Wire-less interface kit	1	1505J50UN0 (option)

Procedure

1. Press the power key on the operation panel to off. Make sure that the power indicator and the memory indicator are off before turning off the main power switch. And then unplug the power cable from the wall outlet.
2. Remove two pins and then remove the slot cover of the OPT2.

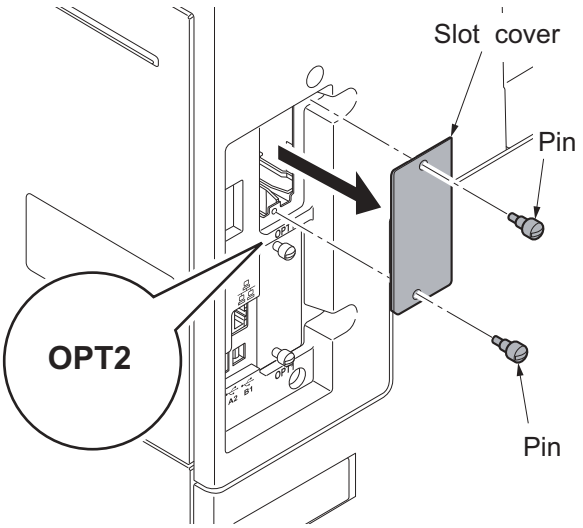

Figure 1-2-99

3. Insert the wire-less interface kit along the groove in OPT2 and secure the board with two pins that have been removed in step 2.

*: Do not directly touch the wire-less interface kit terminal.
Hold the top and bottom of the wire-less interface kit, or the projection of the board to insert the wire-less interface kit.

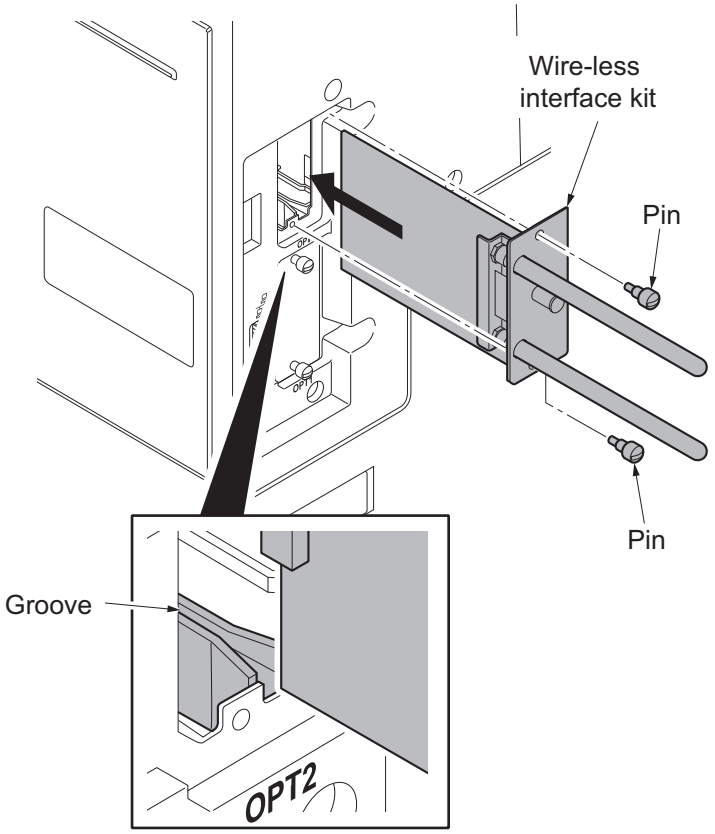

Figure 1-2-100

1-2-10 Installing the IC card reader holder (option)

IC card reader holder installation requires the following parts:

Parts	Quantity	Part.No.
Card reader holder (E)	1	1709AD0UN1 (option)

Supplied parts of IC card reader holder (E)(1709AD0UN1):

Parts	Quantity	Part.No.
IC card reader holder	1	-
Label	1	-
Bundling band	1	-
Hook and loop fasteners	2	-
Spacer	2	-

Procedure

1. Press the power key on the operation panel to off. Make sure that the power indicator and the memory indicator are off before turning off the main power switch. And then unplug the power cable from the wall outlet
2. Remove the staple holder.
3. Remove a screw and then remove the staple holder.

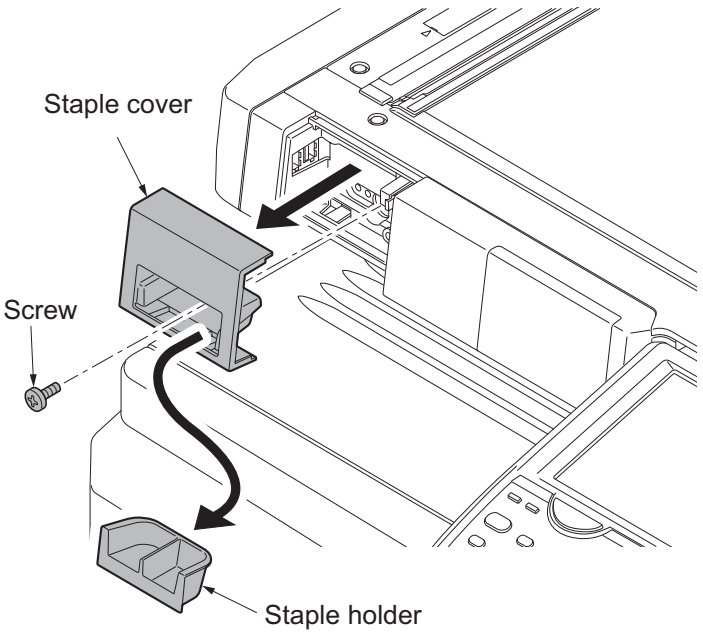

Figure 1-2-101

4. Remove the hook and remove the upper cover B.

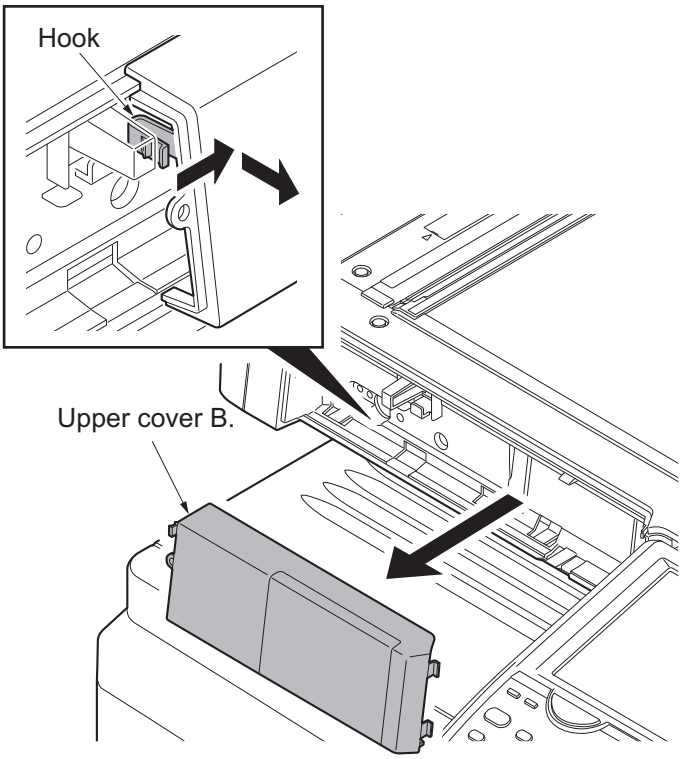

Figure 1-2-102

5. The mounting procedure differs depending type of IC card readers.
   Type A:
   Thicker and in the same size as its holder
   Continue to step 6.
   Type B:
   Thicker but smaller than its holder
   Continue to step 8.
   Type C:
   Thinner and in the same size as its holder
   Continue to step 11.

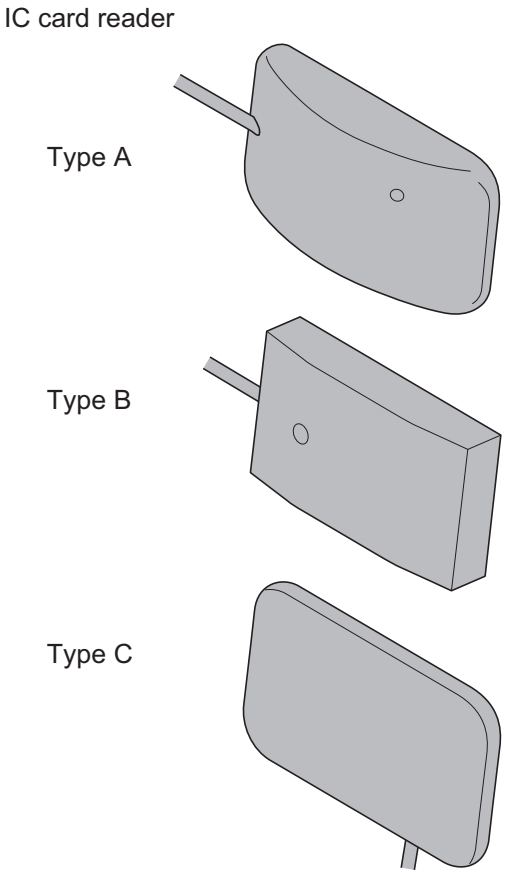

Figure 1-2-103

6. Affix two hook and loop fasteners to the IC card reader and IC card reader holder.

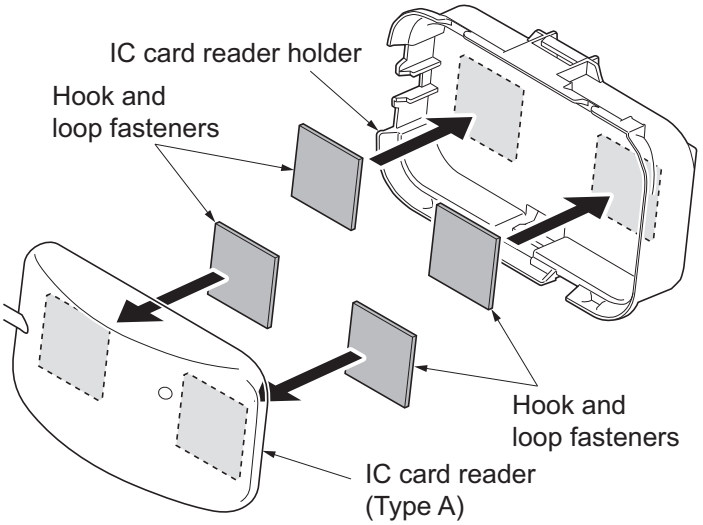

7. Mount the IC card reader to the IC card reader holder.

   Proceed to step 10.

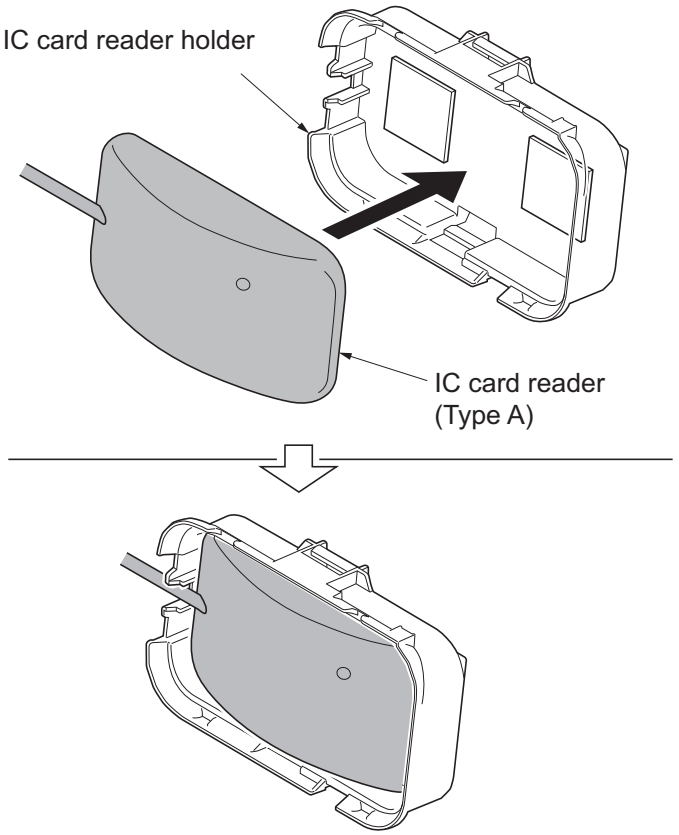

Figure 1-2-104

8. Affix two hook and loop fasteners to the IC card reader and IC card reader holder.
*: Affix a hook and loop fastener onto the IC card reader so that it is mounted on the holder with both being flush with the right side edges.

9. Mount the IC card reader to the IC card reader holder.

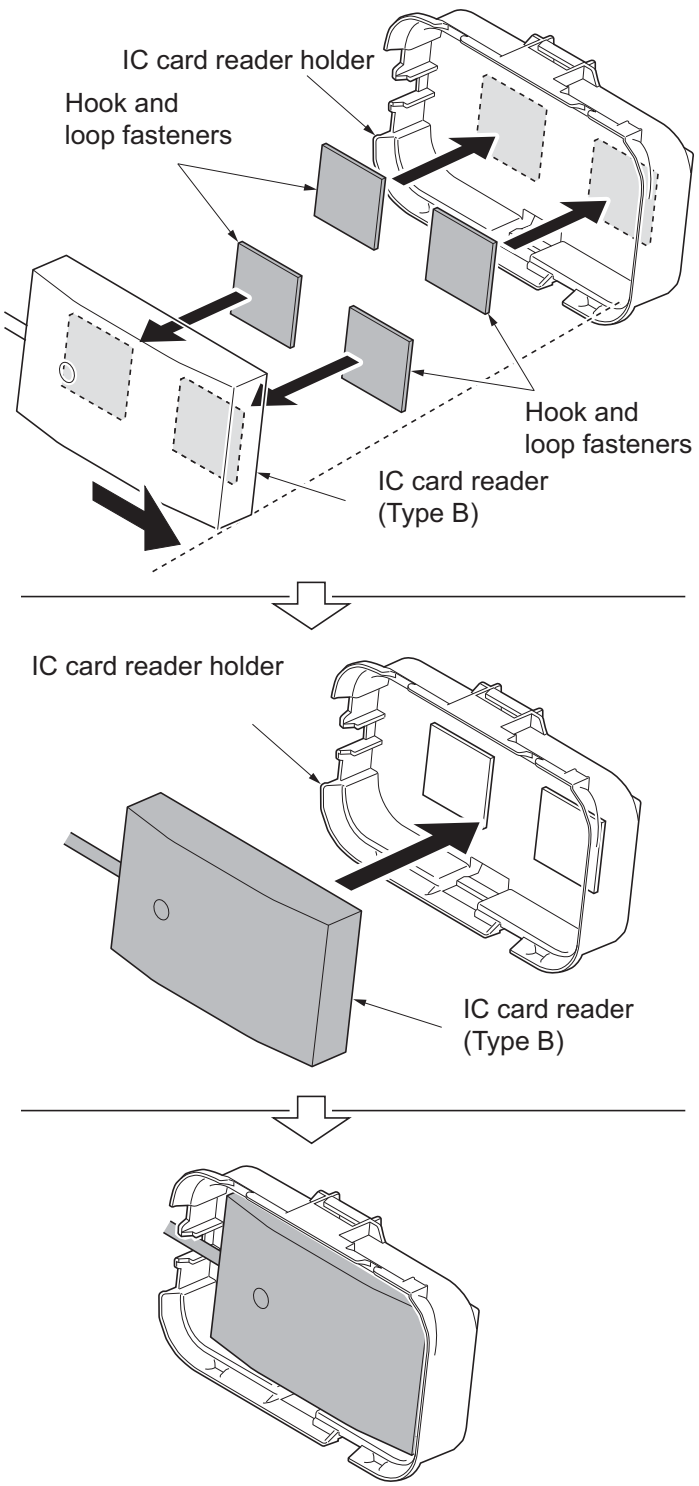

Figure 1-2-105

10. Route the USB cable from the IC card reader through the IC card reader holder ribs, wind around its back and route through another rib.
    *: Make sure the cable will have a slack of more than 20 cm.

    Proceed to step 15.

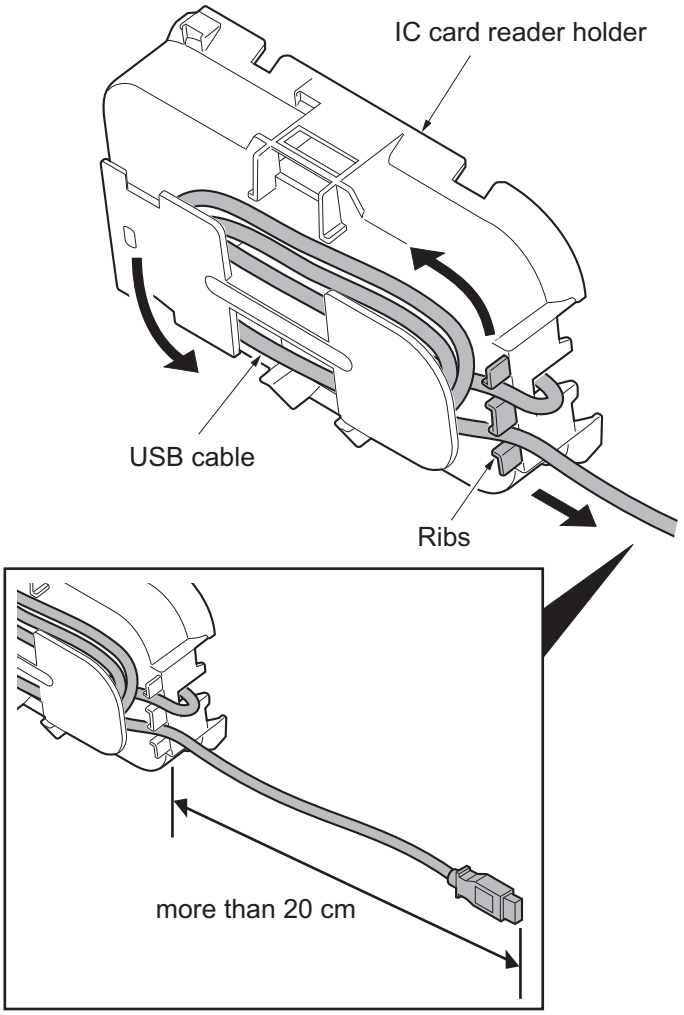

Figure 1-2-106

11. Affix two hook and loop fasteners to the IC card reader.
12. Affix a hook and loop fastener at the reverse side of the spacer where an adhesive tape has been affixed.
    Affix two spacers to the IC card reader.

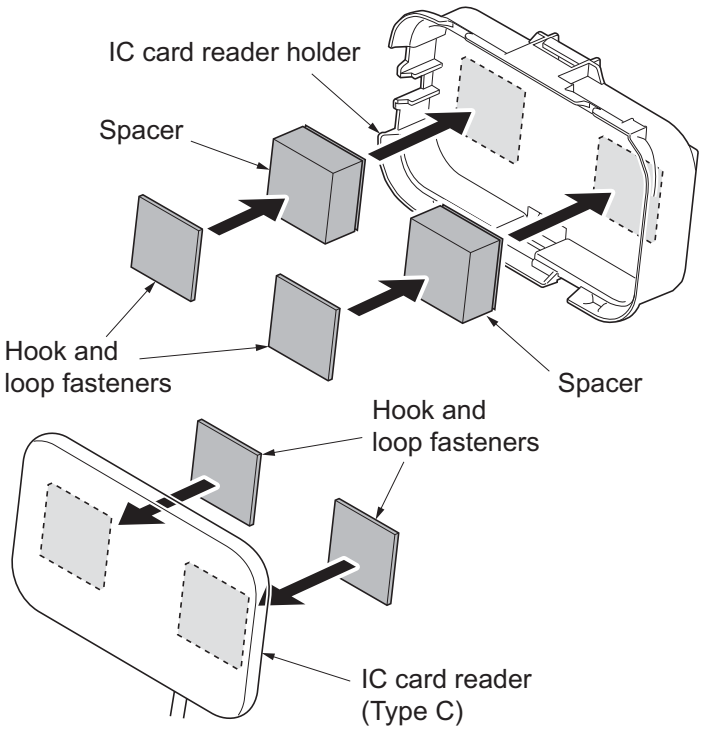

13. Mount the IC card reader to the IC card reader holder.

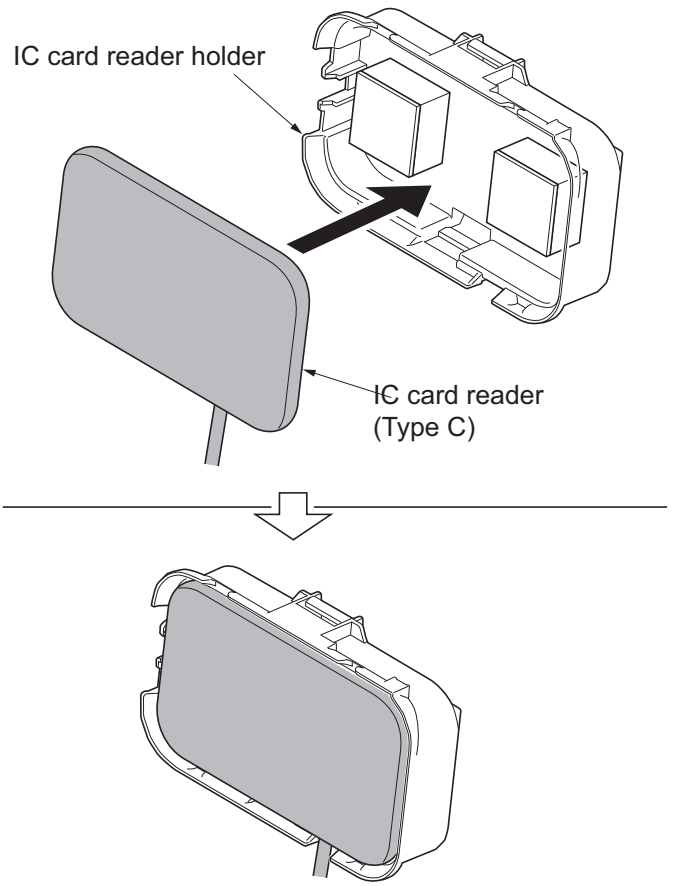

Figure 1-2-107

14. Route the USB cable from the IC card reader through the ribs at the bottom of the IC card reader holder, wind around its back a couple of turns, and route through the rib on the left hand side.

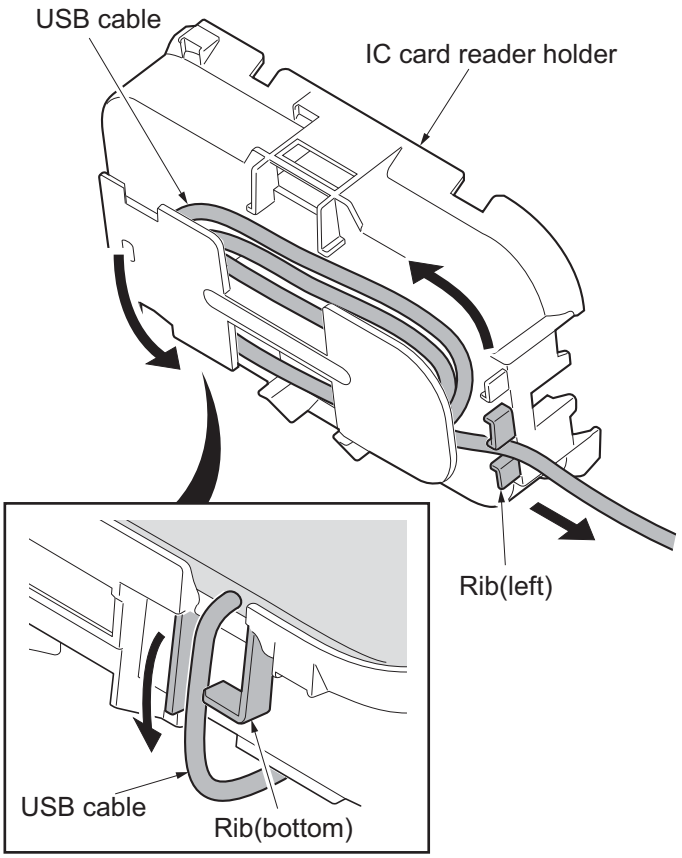

Figure 1-2-108

15. Hook the IC card reader holder onto the machine by mating the two holes on the holder with the hooks on the machine.

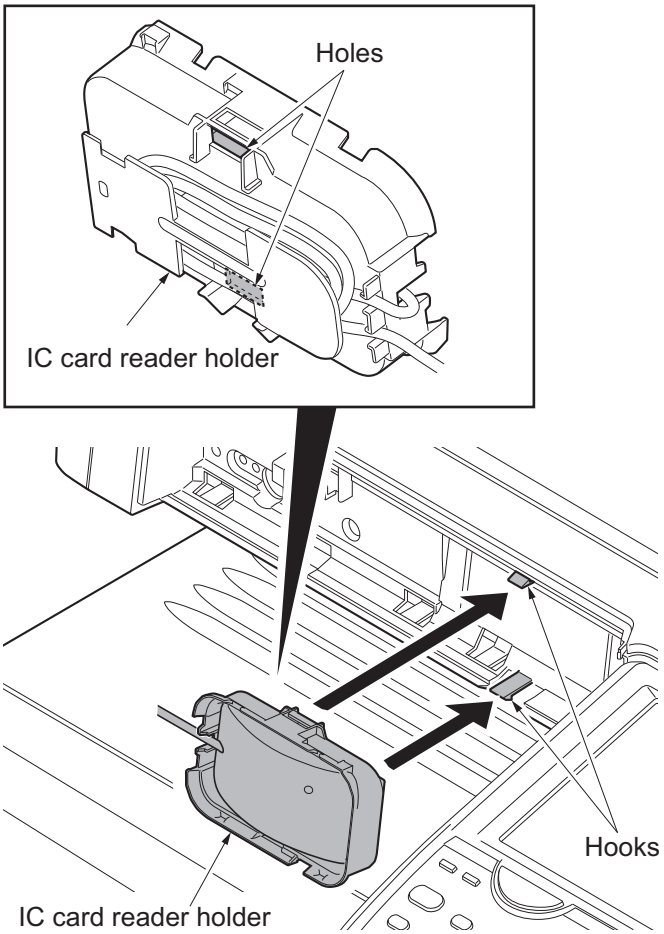

Figure 1-2-109

16. Connect the USB cable with the USB connector on the machine.
    If a keyboard holder is planned to be added, connect it to the connector on the far end.

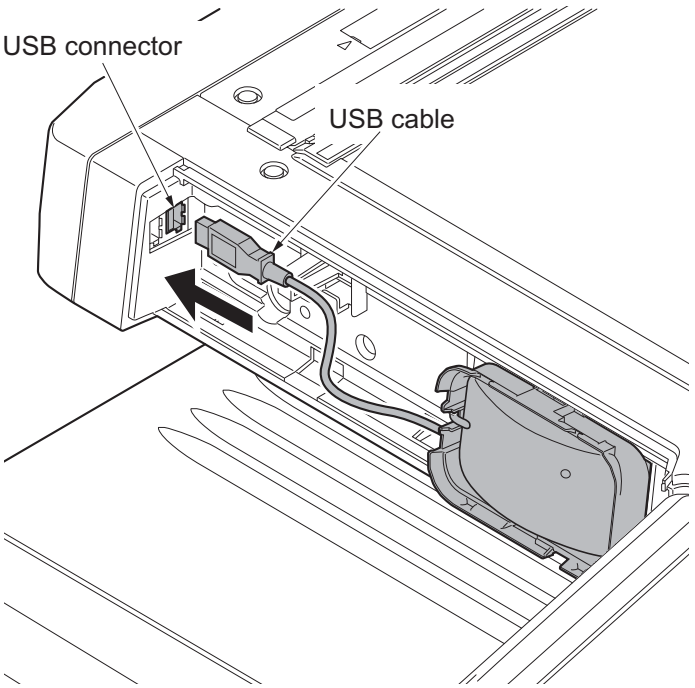

Figure 1-2-110

17. For only type C of the IC card reader, bundle the surplus length of the cable with a bundling band and hook it on the hook.

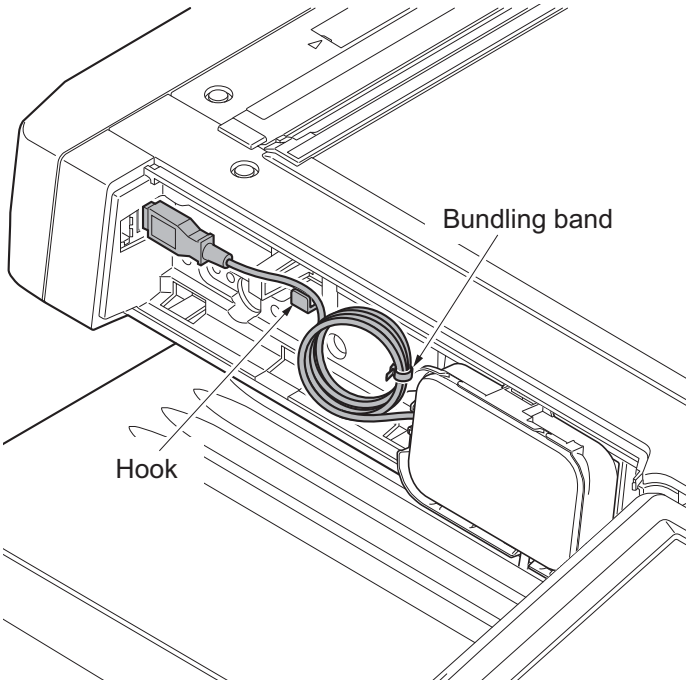

Figure 1-2-111

18. Affix a label on the upper cover B aligning it with the positioning mark.
    *: Fix it by matching with a smoke of a different color.

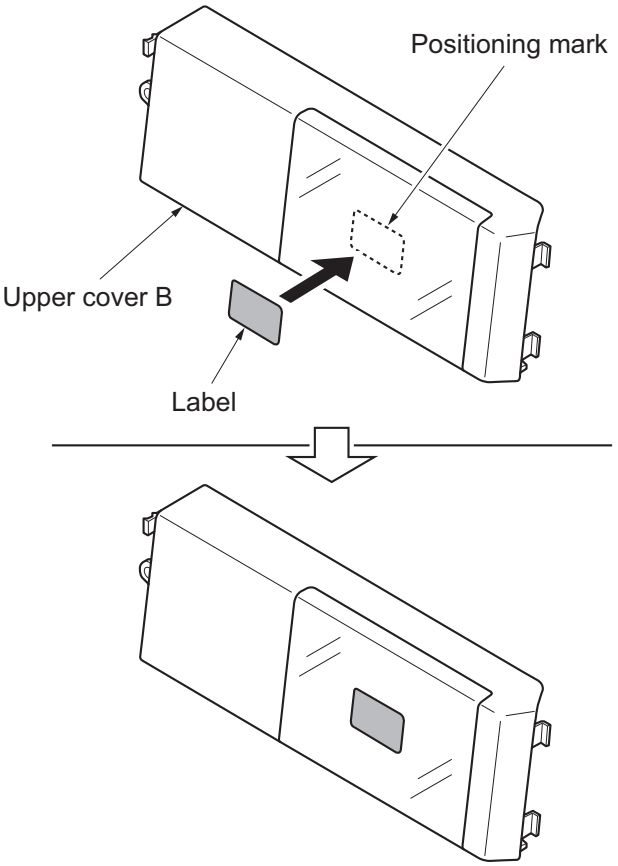

Figure 1-2-112

19. Replace the upper cover B.
    Insert the right-hand hook first, then the left-hand hook.

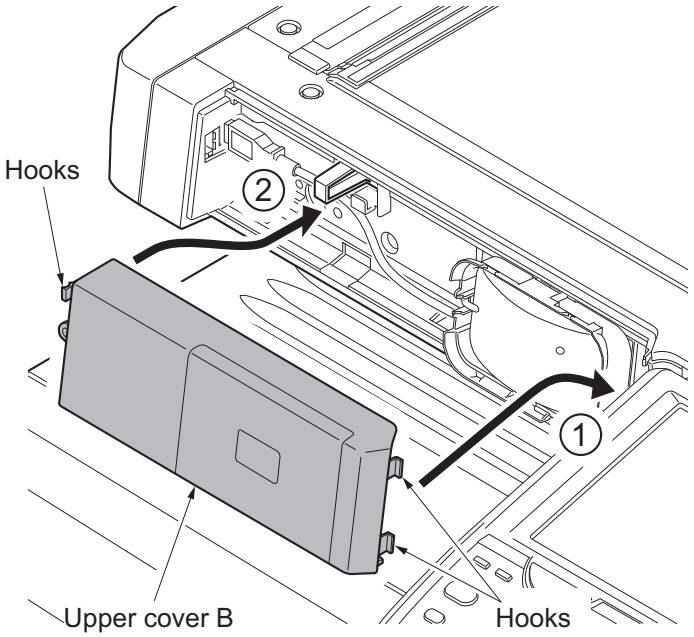

Figure 1-2-113

20. Replace the staple cover and the staple holder in their original positions.

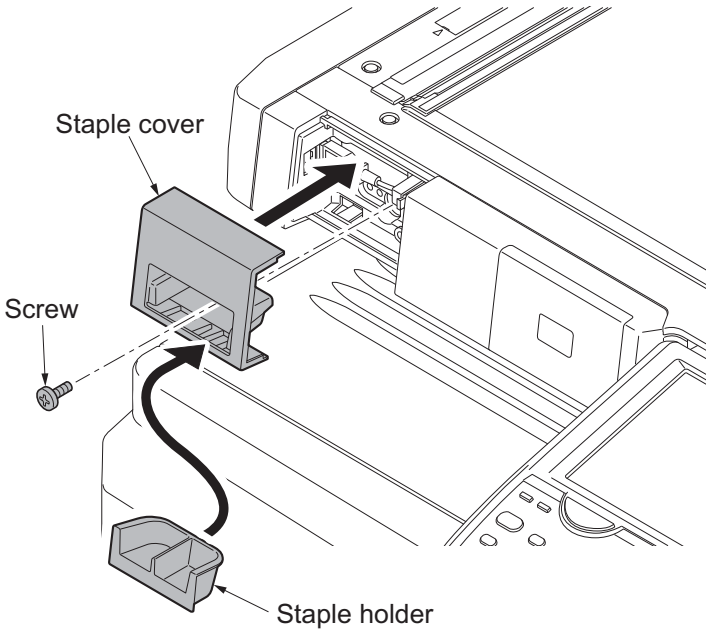

Figure 1-2-114

Enabling IC Card Authentication

Precautions

To install the optional function, you need the License Key. Please access the designated website of your dealer or service representative, and register “Machine No.” indicated on your machine and “Product ID” indicated on the License Certificate supplied with the product to issue the License Key.

1. Turn the main power switch on.
2. Press the System Menu key and then press [System/Network].
   If user login administration is disabled, the user authentication screen appears.
   Enter your login user name and password and then press [Login]. For this, you need to log in with administrator privileges.
3. Press [Next] of Optional Function.
4. Select CARD AUTHENTICATION KIT(B) and press [Activate].
5. The License Key entry screen is displayed.
   Enter the License Key using the numeric keys and press [Official].
6. Confirm the product name CARD AUTHENTICATION KIT(B) and press [Yes].
7. To use a SSFC card, run maintenance mode U222 and set SSFC.

*: When the machine has entered sleep mode with Energy Saver ON, IC cards can not be recognized by the Card reader, since it does not wake from sleep mode. To enable the IC Card Reader in Sleep Mode, refer to the Operation Guide to change the Sleep level to OFF in the Sleep Rules at the Date/Timer/Energy Saver section of the System Menu.

*: This setting is not necessary when the optional network interface kit is installed.

1-2-11 Installing the keyboard holder (option)

Keyboard holder (B) installation requires the following parts:

Parts	Quantity	Part.No.
Keyboard holder (B)	1	1709AF0UN1 (option)

Supplied parts of keyboard holder (B)(1709AF0UN1):

Parts	Quantity	Part.No.
Upper keyboard holder	1	-
Lower keyboard holder	1	-
Upper keyboard cover	1	-
Lower keyboard cover	1	-
Cable cover	1	-
Upper lid	1	-
Lower lid	1	-
Hook and loop fastener	2	-
Bundling band	2	-
M4 x 12 tap-tight S screw	2	-
M3 x 8 tap-tight S screw	10	-
M3 x 8 tap-tight P screw	2	-

Procedure

1. Press the power key on the operation panel to off. Make sure that the power indicator and the memory indicator are off before turning off the main power switch. And then unplug the power cable from the wall outlet.
2. Remove the staple holder.
3. Remove a screw and then remove the staple cover.

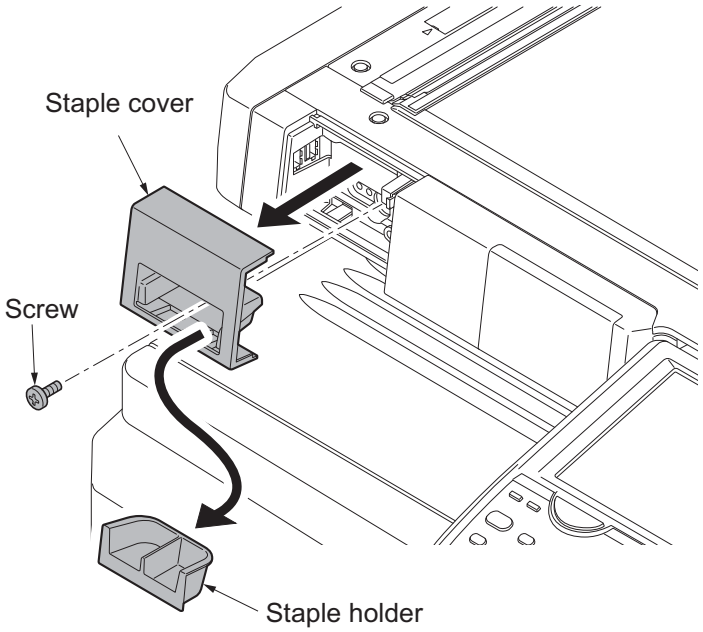

Figure 1-2-115

4. Remove a screw from the machine.

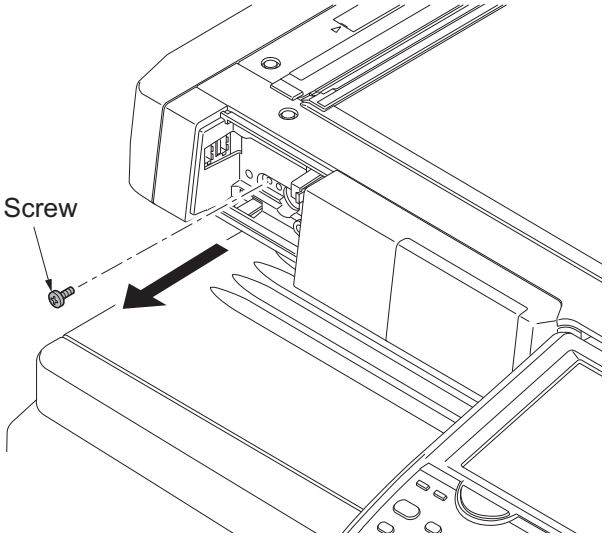

Figure 1-2-116

5. Fit the lower keyboard mounting bracket with the machine using the two S Tite screws M4 x 12.

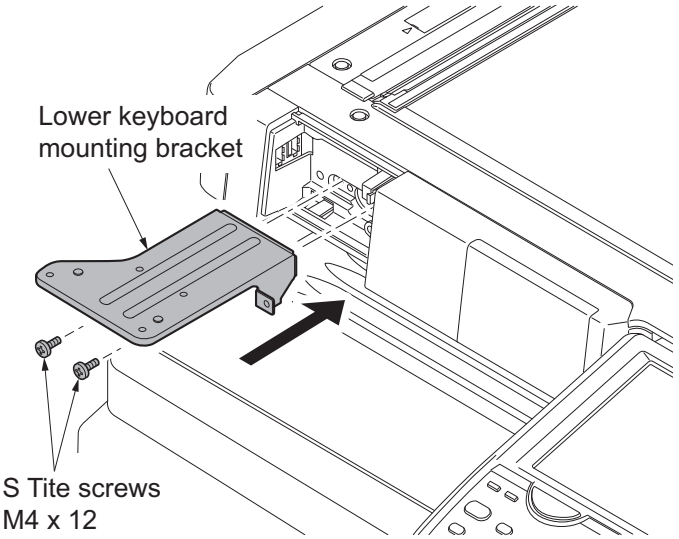

Figure 1-2-117

6. Fix the upper keyboard mounting bracket onto the lower keyboard mounting bracket using the four S Tite screws M3 x 8.
   Align them with each other at the mark A.

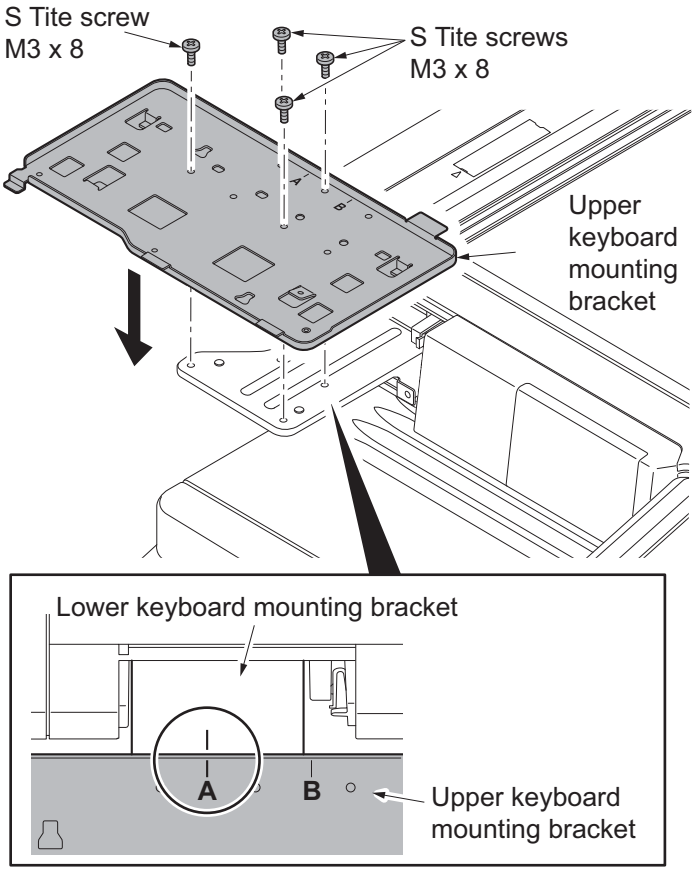

Figure 1-2-118

7. Cut out the cutaway portion of the lower keyboard cover by using a pair of nippers.

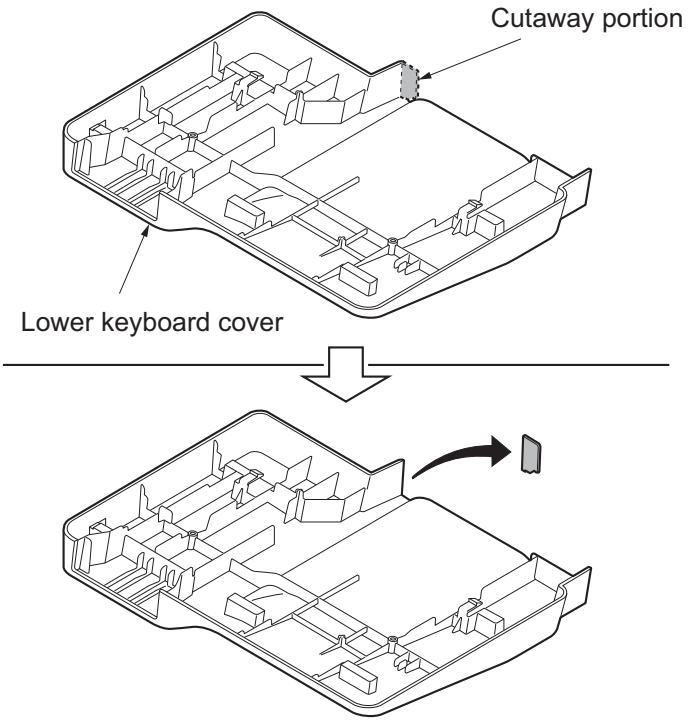

Figure 1-2-119

8. Insert the two positioning pins at the bottom of the lower keyboard cover in the holes on the keyboard mounting bracket, and slide towards the rear.
9. Latch the lower keyboard cover with the upper keyboard mount by the five hooks.

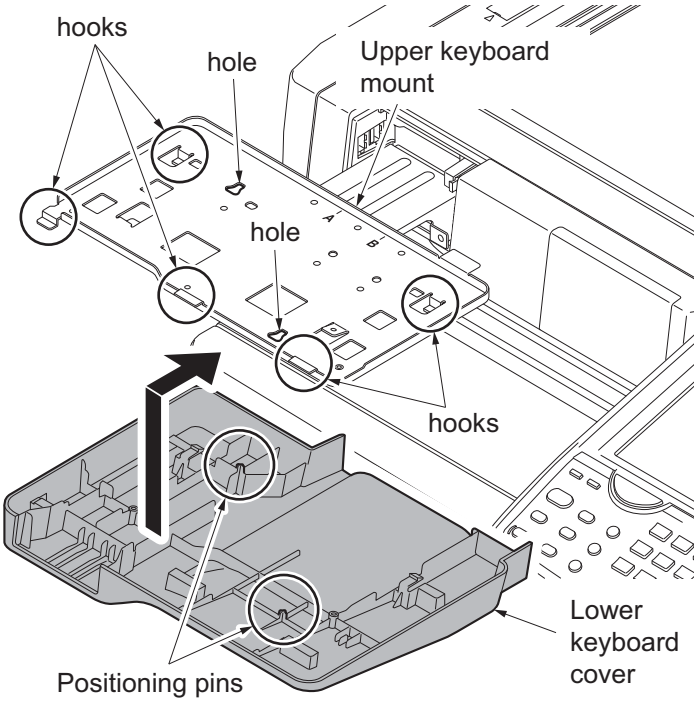

Figure 1-2-120

10. Fix the lower keyboard cover onto the upper keyboard mounting bracket using the two P Tite screws M3 x 8.

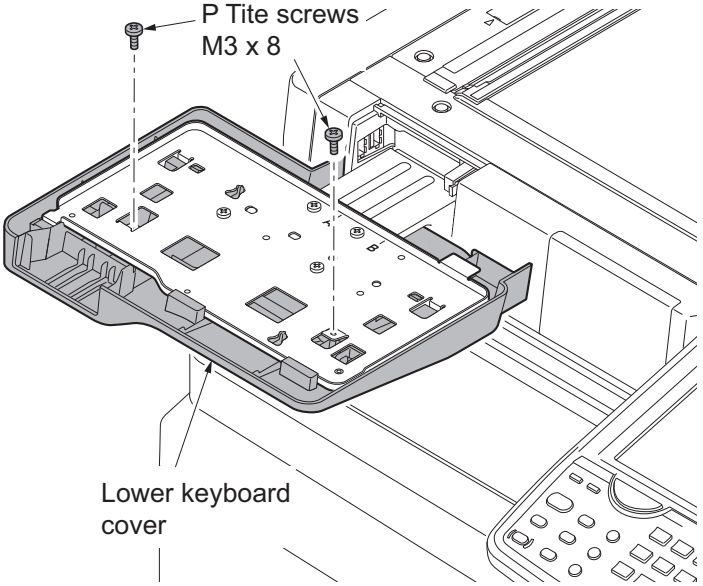

Figure 1-2-121

11. Fix the upper keyboard cover onto the upper keyboard mounting bracket using the five S Tite screws M3 x 8.

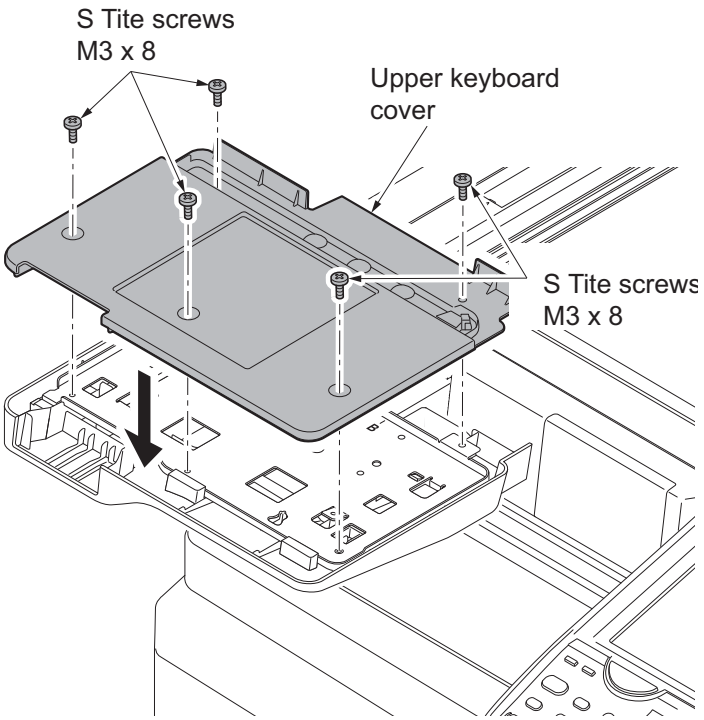

Figure 1-2-122

12. Affix two pieces of hook and loop fasteners on the upper keyboard cover.

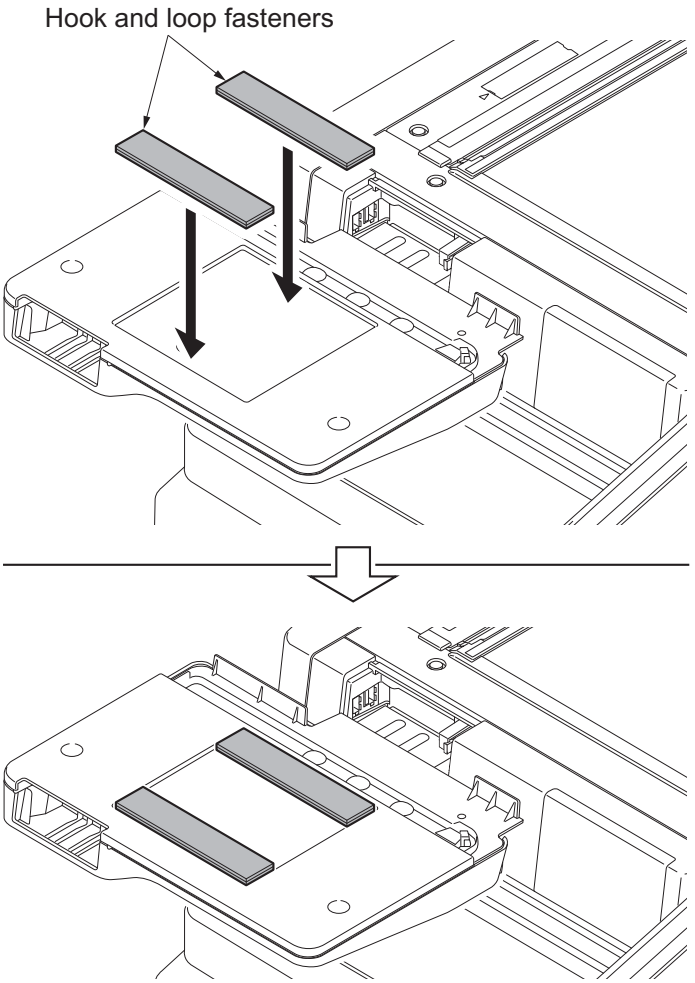

Figure 1-2-123

13. Fix the keyboard with the hook and loop fasteners.
14. Connect the USB cable with the USB connector on the machine.

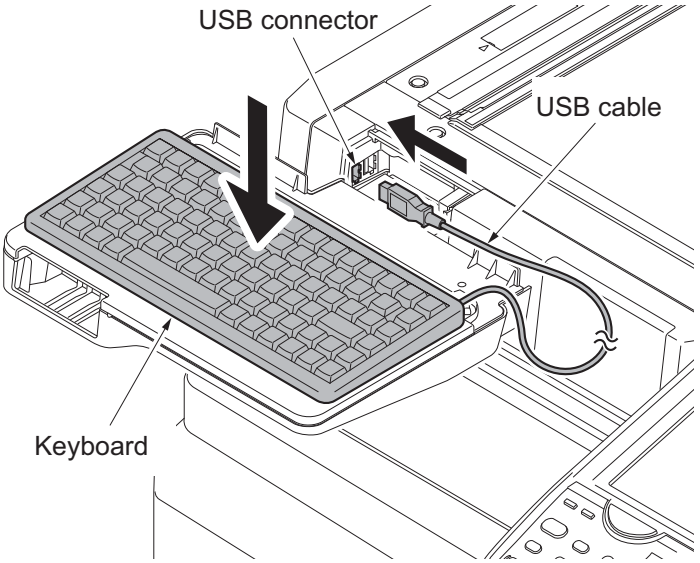

Figure 1-2-124

15. Bundle the surplus length of the cable with two bundling bands and hook it on the hook of the upper keyboard cover.

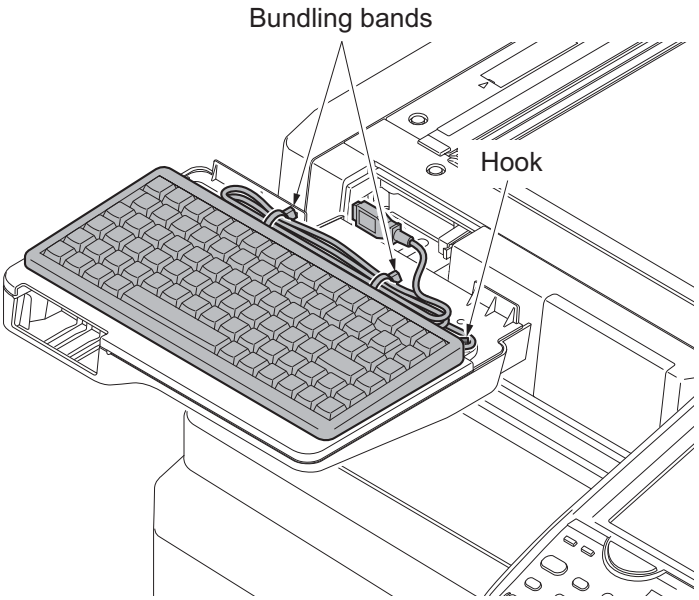

Figure 1-2-125

16. Slide the upper lid and fix in the machine.

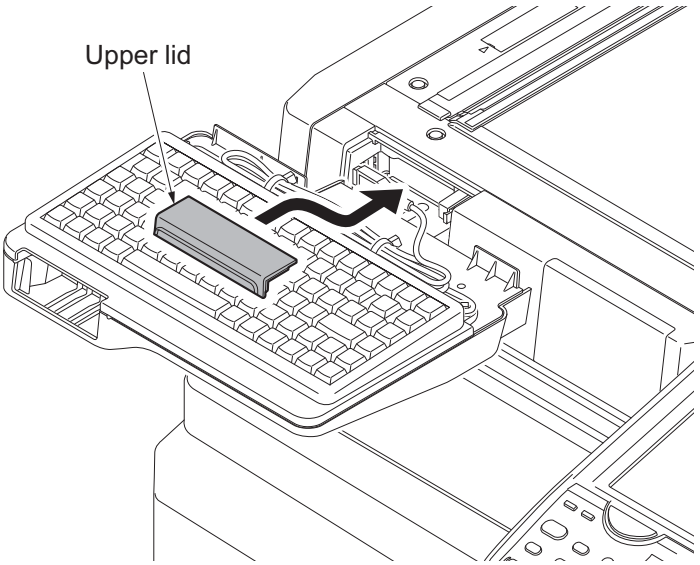

Figure 1-2-126

17. Fix the cable cover on the machine. Latch the three hooks at the near end and press the hooks downwards to mate with the holes at the far end.

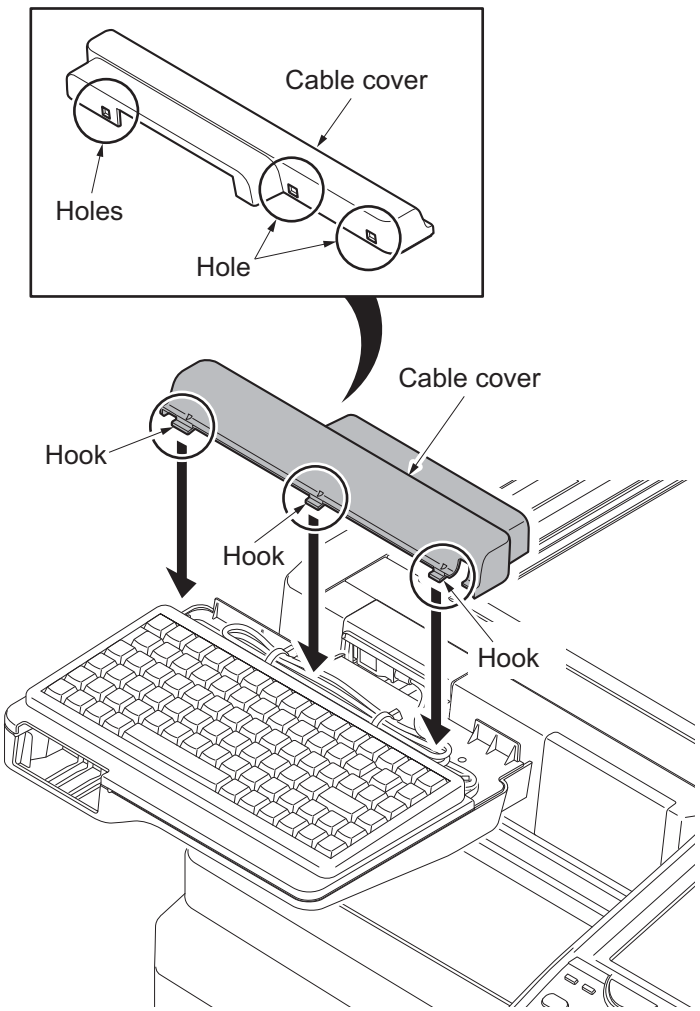

Figure 1-2-127

18. Latch the hook of the lower lid with the machine.
19. Fit the lower lid with the machine using a S Tite screws M3 x 8.

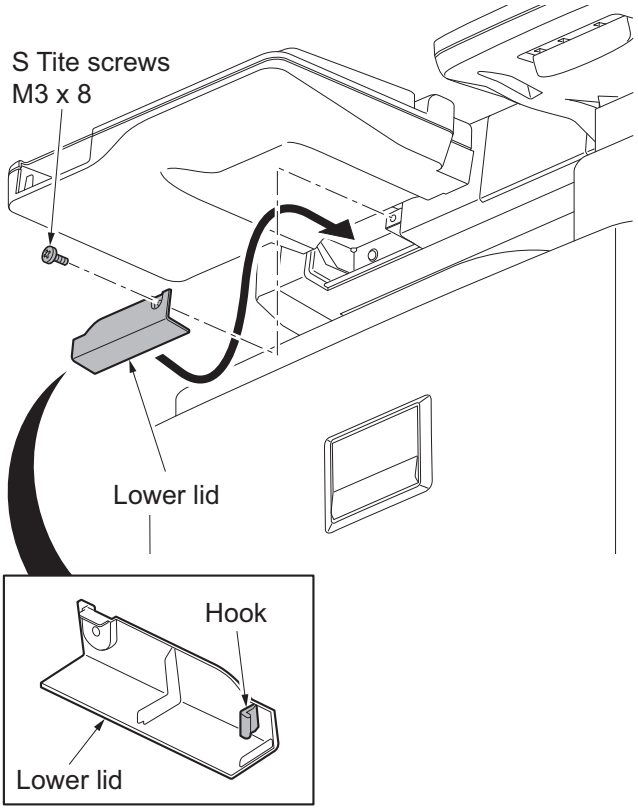

Figure 1-2-128

20. Replace the staple holder.

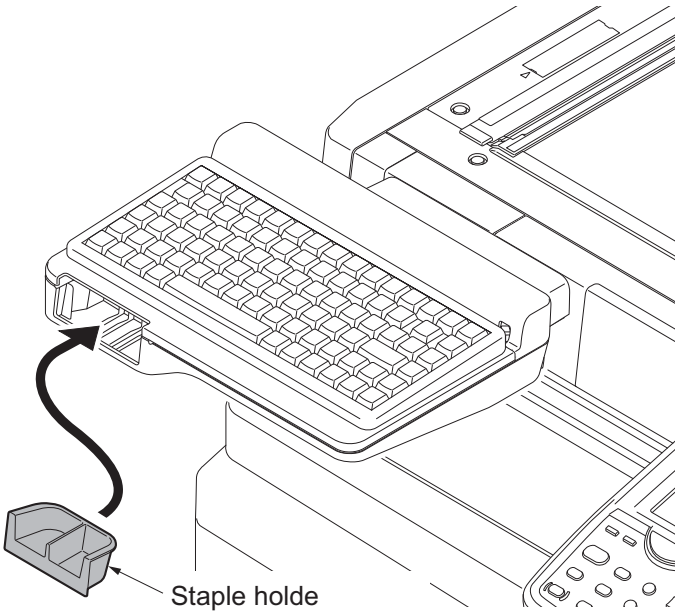

1-2-12 Installing the Printed Document Guard Kit (option)

Printed Document Guard Kit installation requires the following parts:

Parts	Quantity	Part.No.
Printed Document Guard Kit(B)	1	1503P40UN0

Supplied parts of Printed Document Guard Kit :

Parts	Quantity	Part.No.
Copy guard PWB	1	-
FFC (short)	2	-
FFC (long)*1	2	-
Mount plate B*1	1	-
Screws M3 x 6*2	2	-

*1: Not used in this model.
*2: One piece is used in this model.

Procedure

1. Press the power key on the operation panel to off. Make sure that the power indicator and the memory indicator are off before turning off the main power switch. And then unplug the power cable from the wall outlet.

2. Remove nine screws and then remove the rear upper cover.

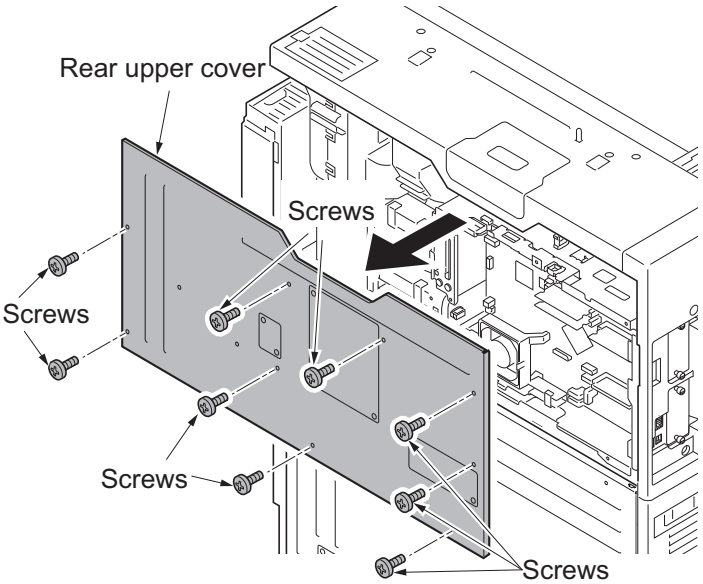

Figure 1-2-130

3. Insert the FFC (short) into the copy guard PWB until it clicks in.
   WIthout a DP relay circuit PWB A FFC is used at YC2 (serigraphed on MAIN)
   WIth a DP relay circuit PWB Two FFCs are used at YC2 (serigraphed on MAIN) YC1 (Serigraphed on DP)

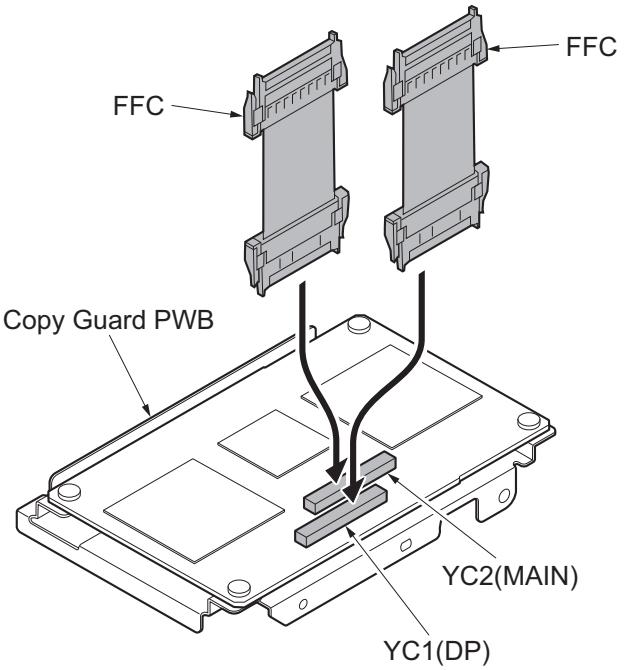

Figure 1-2-131

4. Insert the copy guard PWB to the side of the main-circuit PWB and fix with a S Tite screw M4 x 8.

*: Mark the FFC cable by folding.

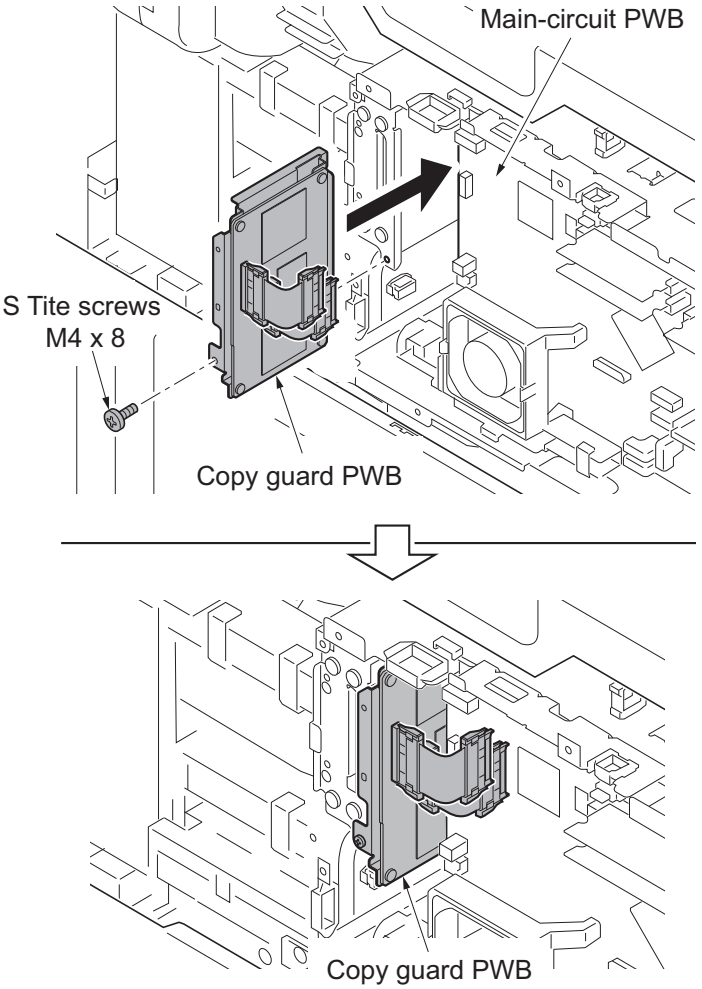

Figure 1-2-132

5. Connect the main-circuit PWB and the DP relay circuit PWB with the FFC.
   - WIthout a DP relay circuit PWB Main-circuit PWB YC34
   - WIth a DP relay circuit PWB Main-circuit PWB YC34
     DP relay circuit PWB YC35

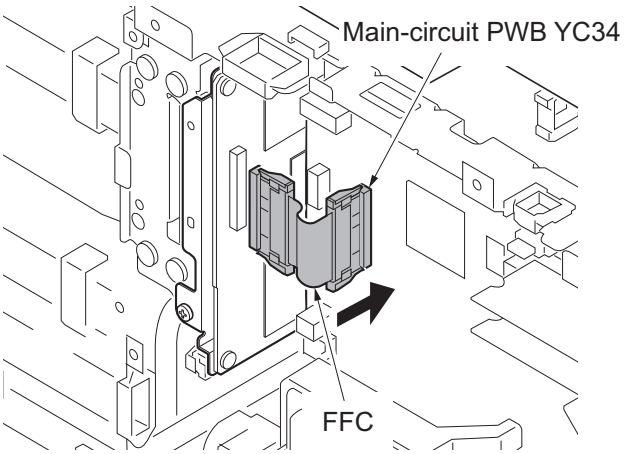

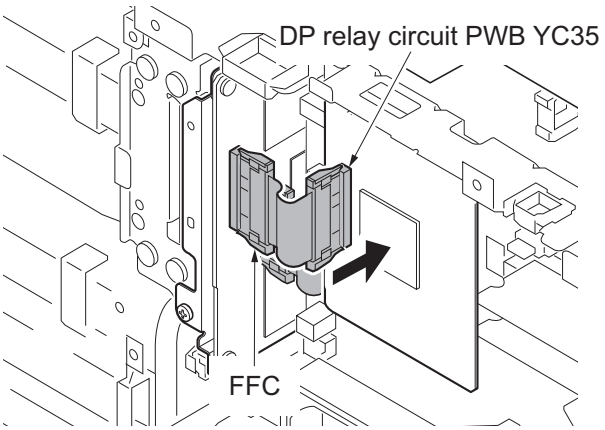

Figure 1-2-133

6. Replace the upper rear cover.
7. Confirm the settings.
   1) Turn the main power switch on.
   2) Press the system menu key, then, System/Network.
   3) The user authentication dialog is shown if user authentication is not enabled.
      Enter the login user name and the login password, then, press Login.
      Use an administrator privilege for login.
   4) Confirm that the Confidential Guard is set to On.

1-2-13 Installing the duct unit (option)

Duct unit installation requires the following parts:

Parts	Quantity	Part.No.
Duct unit	1	302LC94530

Supplied parts of duct unit (302LC94530):

Parts	Quantity	Part.No.
Duct A	1	-
Duct B	1	-
Filter	2	-
M3 x 8 tap-tight P screw	2	7BB200308H
M3 x 8 tap-tight P screw (black)	1	7BB282308H
M3 x 8 tap-tight S screw (black)	2	7BB782308H

Procedure

1. Press the power key on the operation panel to off. Make sure that the power indicator and the memory indicator are off before turning off the main power switch. And then unplug the power cable from the wall outlet.
2. Fit duct B to duct A using two M3 x 8 tap-tight P screws.

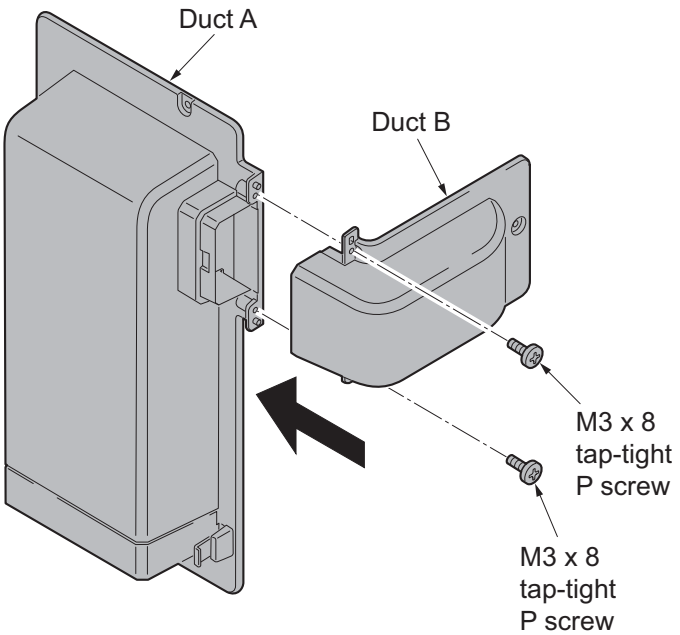

Figure 1-2-134

3. Fit two filters to duct A.

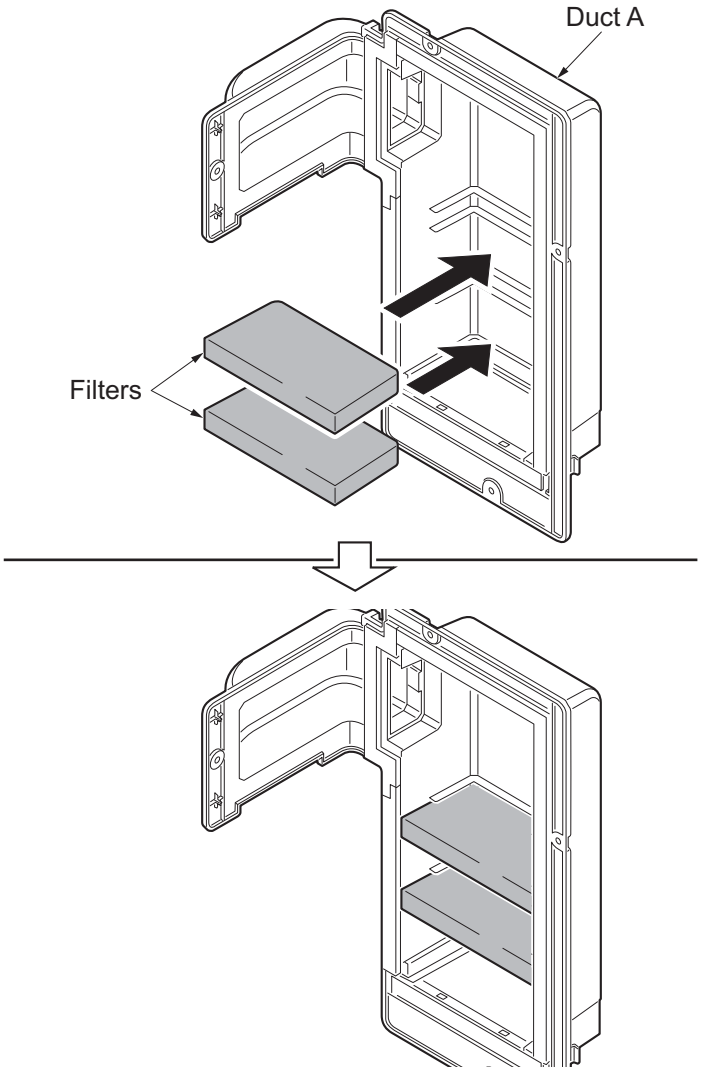

Figure 1-2-135

4. Remove the screw A from the rear lower cover.

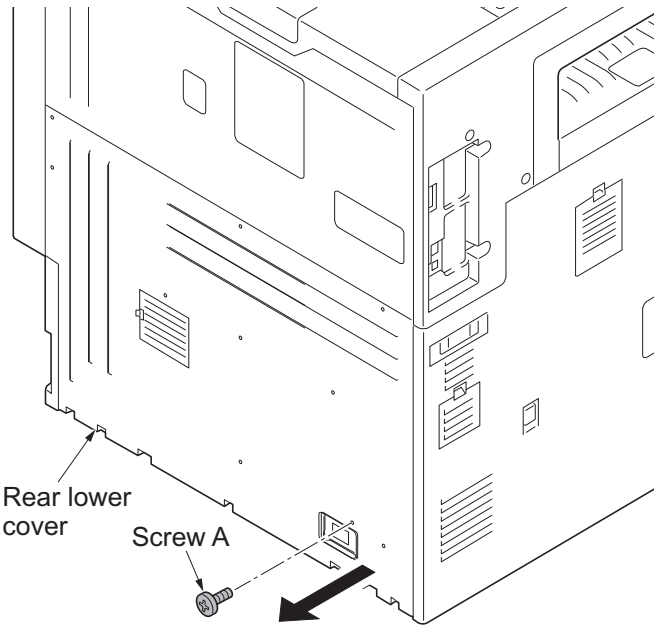

Figure 1-2-136

5. Fit the duct unit to the machine using the removed screw A, M3 x 8 tap-tight P screw (black) and two M3 x 8 tap-tight S screws (black).

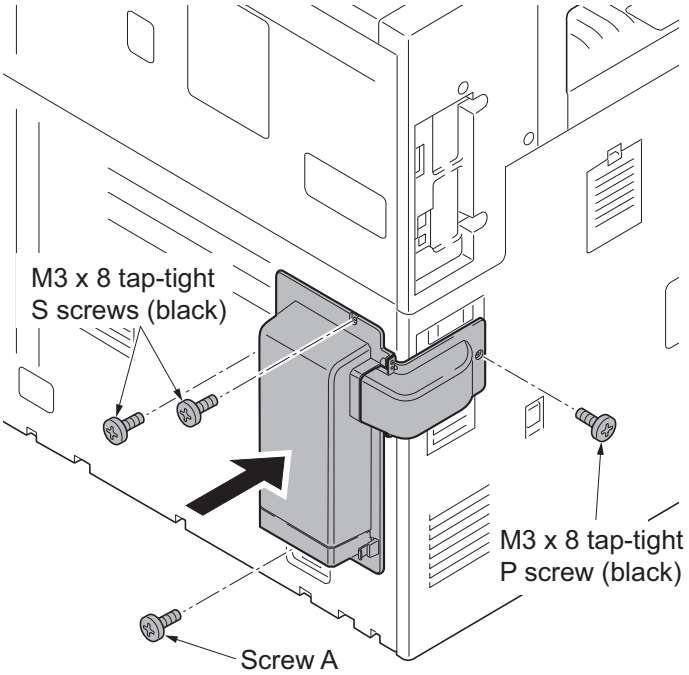

Figure 1-2-137

1-2-14 Installing the handset (option for Japan only)

(1) Installing directly on the device

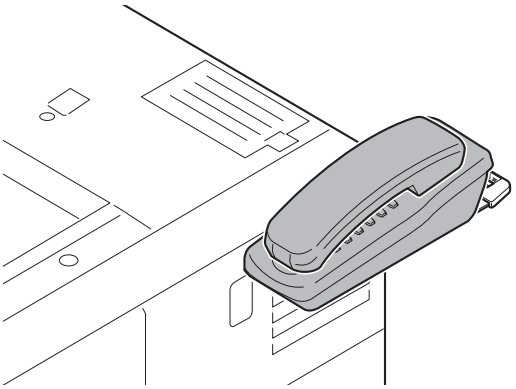

Handset installation requires the following parts:

Parts	Quantity	Part.No.
Handset	1	1909AG9JP0 (option)

Supplied parts of handset (1909AG9JP0):

Parts	Quantity	Part.No.
Handset	1	-
Handset base	1	-
Handset mount	1	-
Protection cover	1	-
Pin	2	-
Telephone wire	1	-
Modular cable	1	-
M4 nut	2	3CY06030

Procedure

1. Press the power key on the operation panel to off. Make sure that the power indicator and the memory indicator are off before turning off the main power switch. And then unplug the power cable from the wall outlet.
2. Pull the paper conveying unit out.
3. Remove two screws and then remove the ISU right cover.
4. Remove the screw and five hooks and then remove the right upper cover.

*: Unlatch the stoppers with the rear bottom one first.

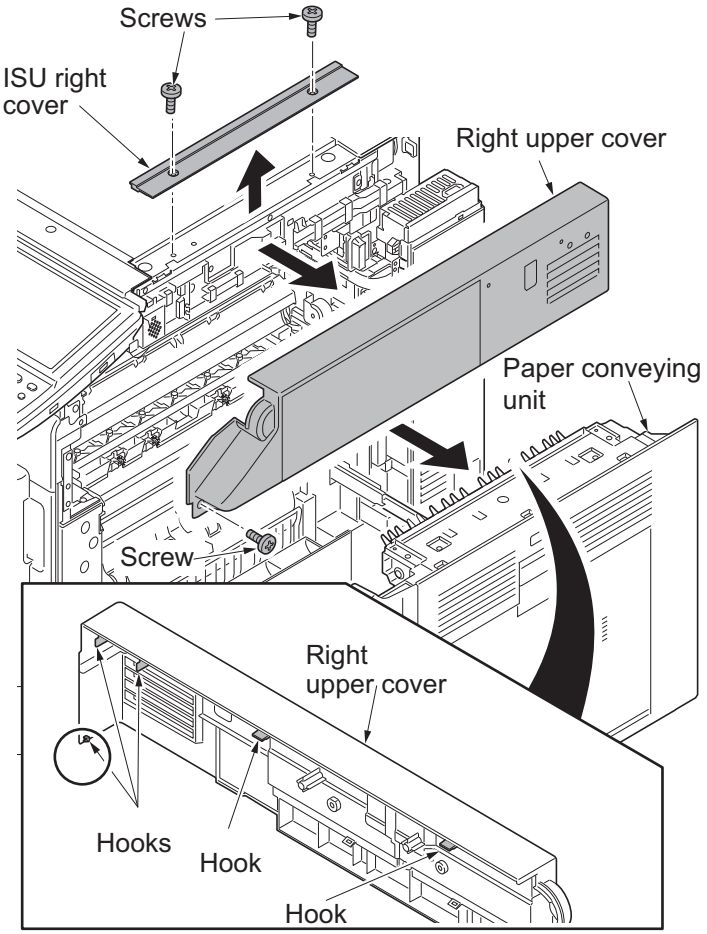

Figure 1-2-138

5. Mount two M4 nuts at the back of the right upper cover.
6. Fit the handset mount to the right upper cover using two pins.

*: Use the lower screw holes.

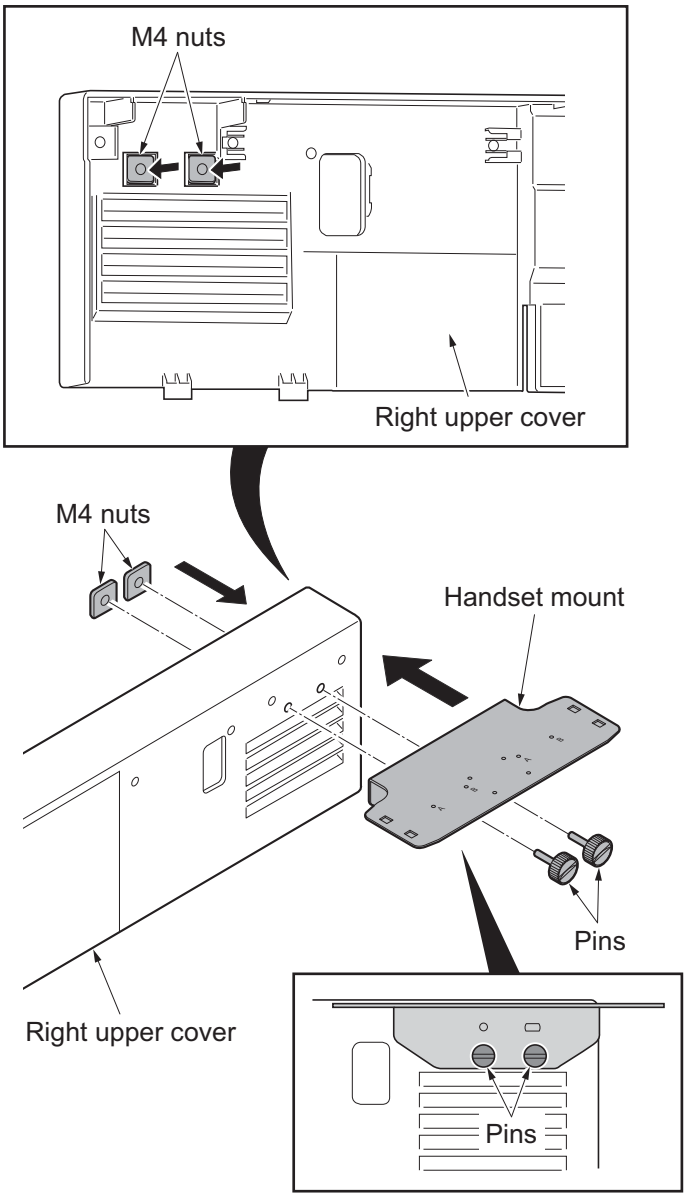

*: Secure the screws making sure that the nuts do not fall.

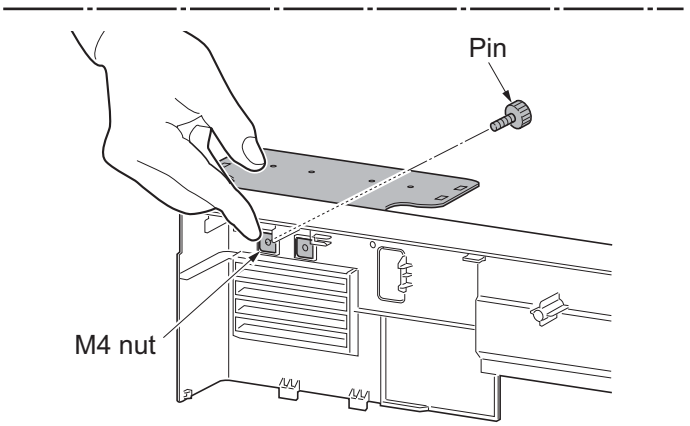

Figure 1-2-139

7. Refit the right upper cover.
8. Refit the ISU right cover.
9. Close the paper conveying unit.
10. Remove two nuts and two pins from the handset mount and remount it at mark B.

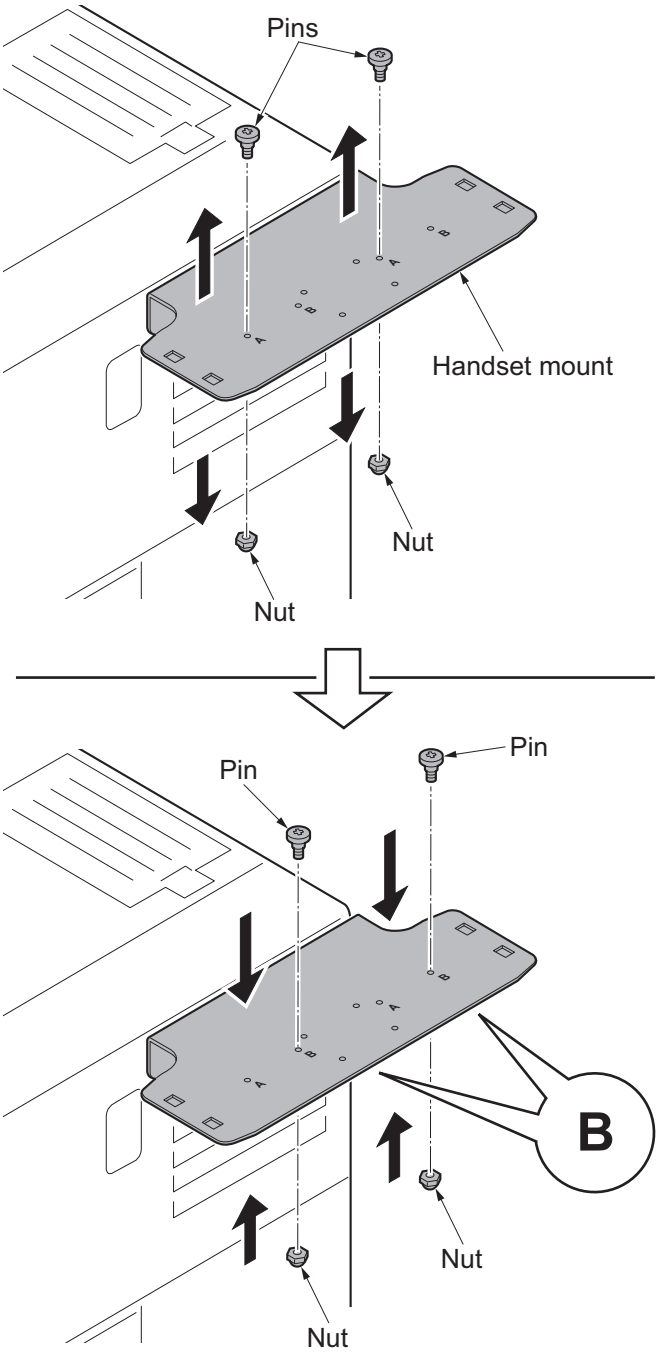

Figure 1-2-140

11. Insert the pins at the insert parts on the back of the handset base, and slide it towards you.

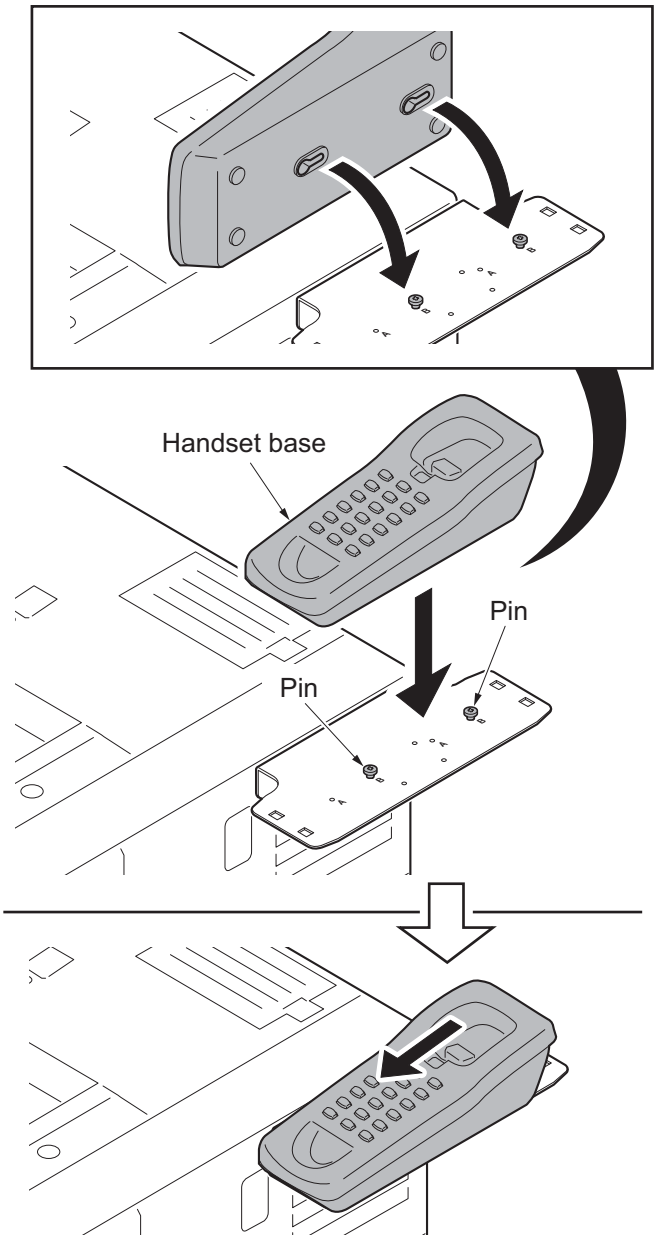

Figure 1-2-141

12. Fit the protection cover to the handset mount.

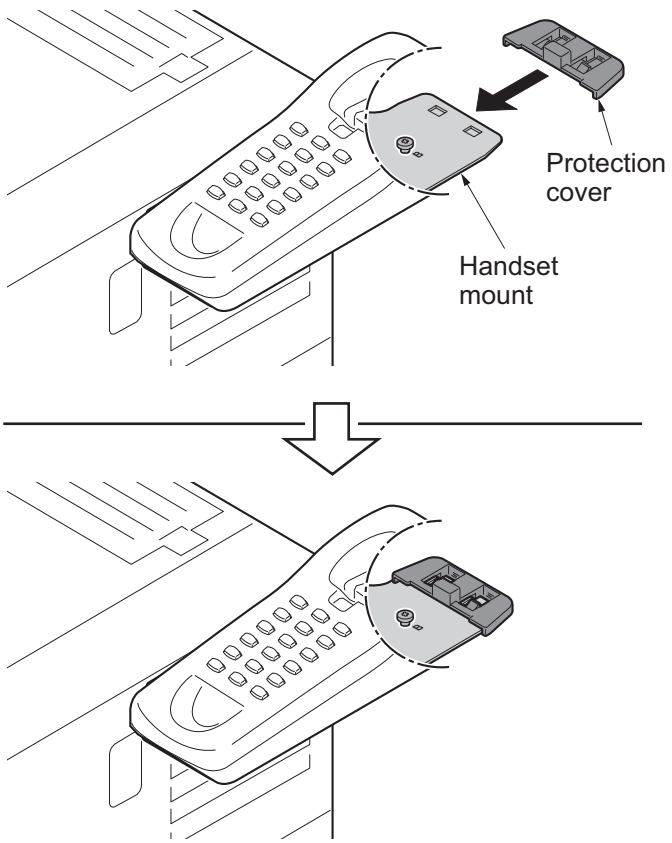

Figure 1-2-142

13. Connect the telephone wire to the handset and the handset base.

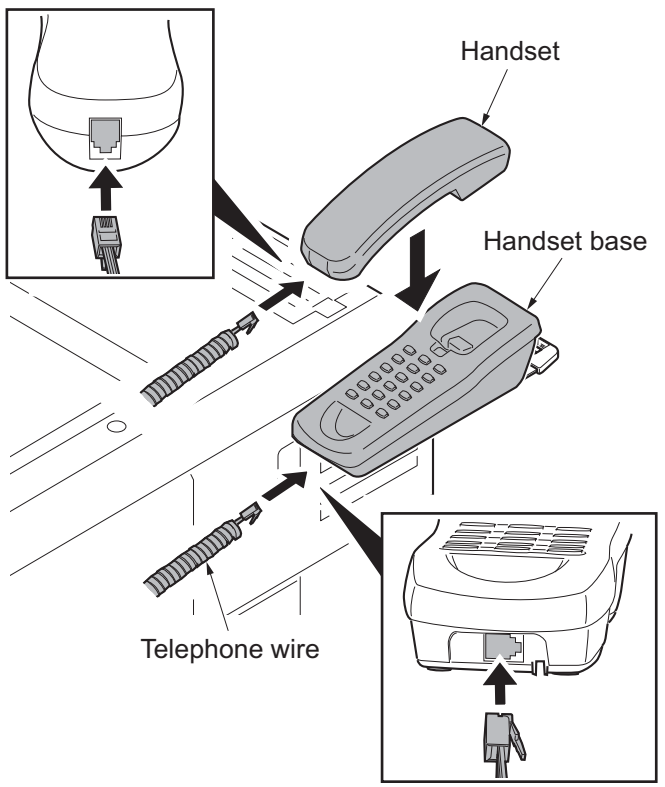

Figure 1-2-143

14. Connect the modular cable to the handset base and the machine.

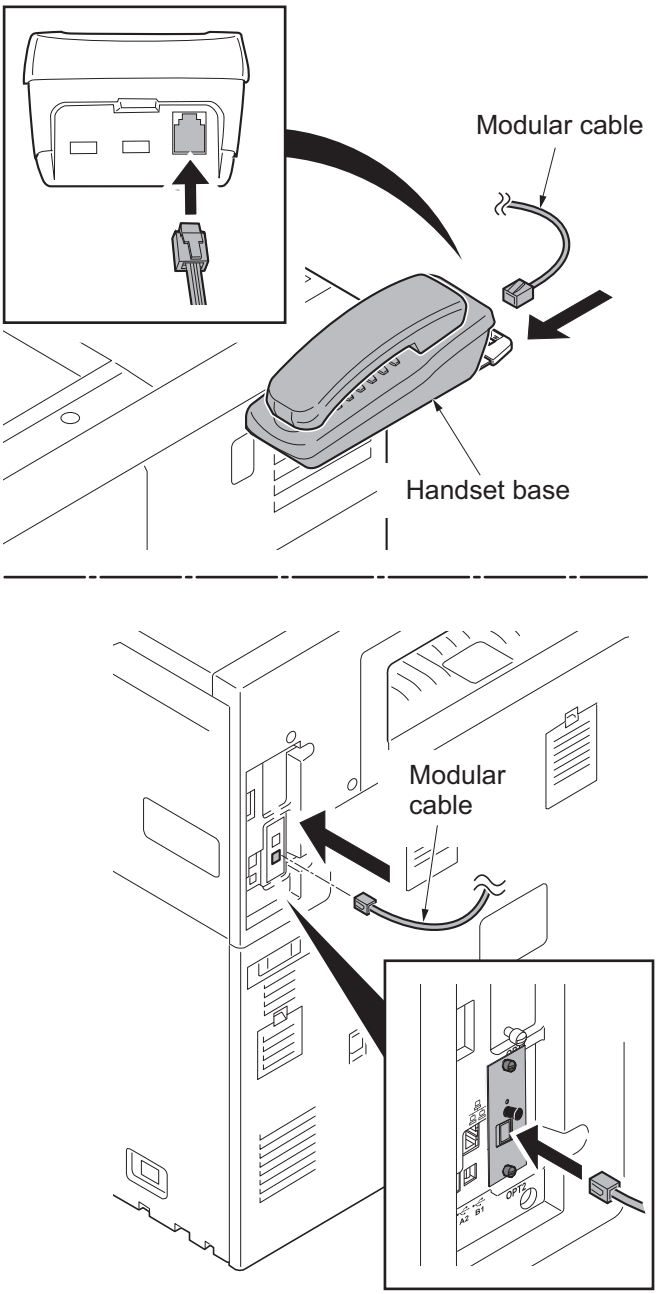

Figure 1-2-144

(2) Mounting on the document table

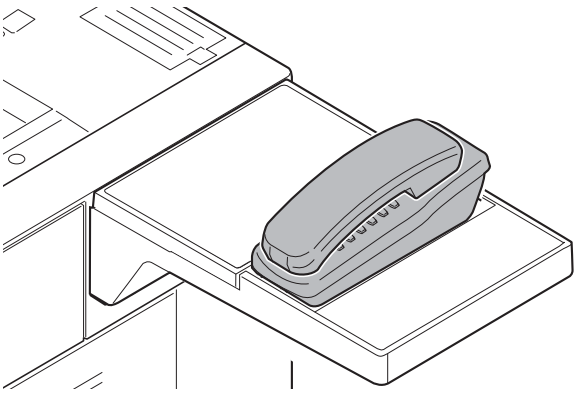

Handset installation requires the following parts:

Parts	Quantity	Part.No.
Handset	1	1909AG9JP0 (option)
Document table	1	1902LC0UN2 (option)

Supplied parts of handset (1909AG9JP0):

Parts	Quantity	Part.No.
Handset	1	-
Handset base	1	-
Handset mount	1*	-
Protection cover	1	-
Pin	2	-
Telephone wire	1	-
Modular cable	1	-
M4 nut	2*	3CY06030

*: Not used in this model.

Supplied parts of document table (1902LC0UN2):

Parts	Quantity	Part.No.
Tray stay	1	-
Tray mount	1	-
Tray cover	1	302LC04601
Tray lower cover	1	302LC04710
Tray retainer	1	-
Sheet	2*	302LC04660
Pin	2	303NS24410
M4 nut	2	3CY06030
M4 x 8 screw	7	7BB180408H
M4 x 14 screw	2	7BB607414H

*: Sheet x1 is not used.

Procedure

1. Press the power key on the operation panel to off. Make sure that the power indicator and the memory indicator are off before turning off the main power switch. And then unplug the power cable from the wall outlet.
2. Pull the paper conveying unit out.
3. Remove two screws and then remove the ISU right cover.
4. Remove the screw and five hooks and then remove the right upper cover.

*: Unlatch the stoppers with the rear bottom one first.

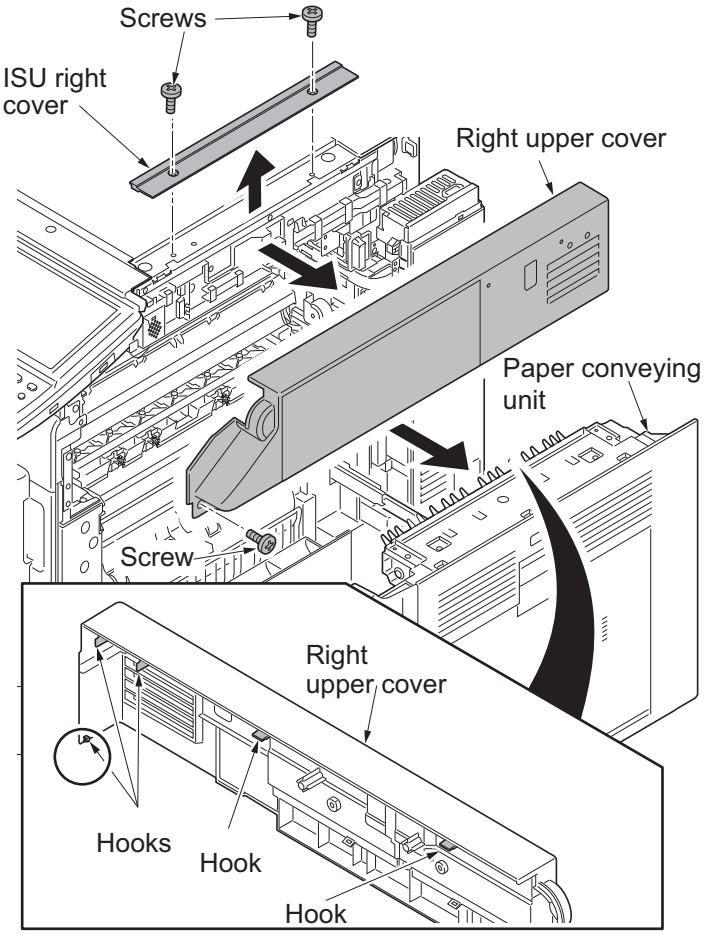

Figure 1-2-145

5. Mount two M4 nuts at the back of the right upper cover.
6. Fit the tray stay to the right upper cover using two M4 x 14 screws.

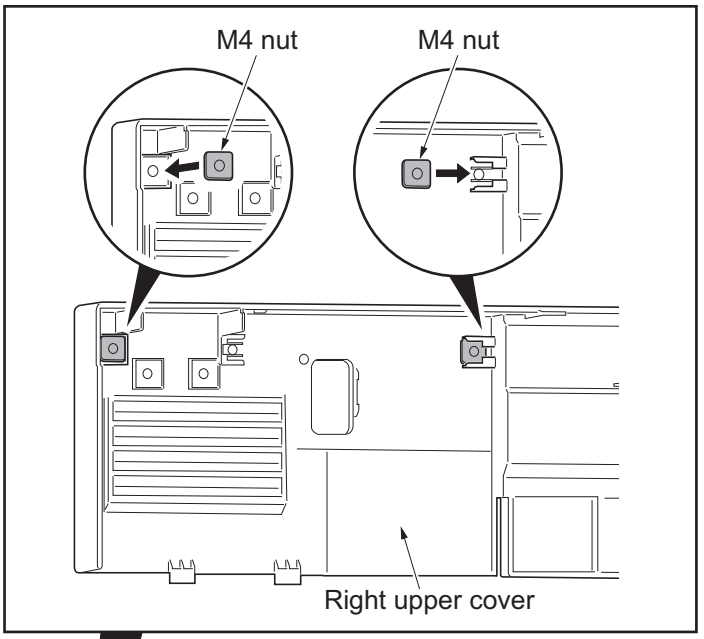

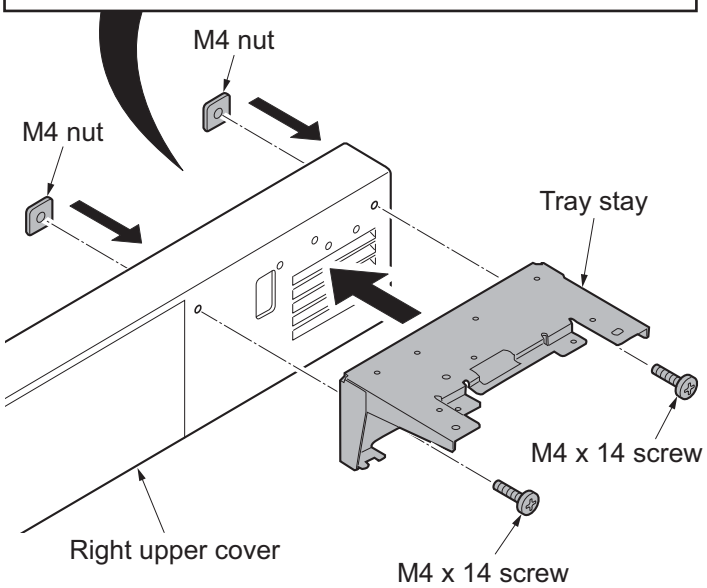

*: Secure the screws making sure that the nuts do not fall.

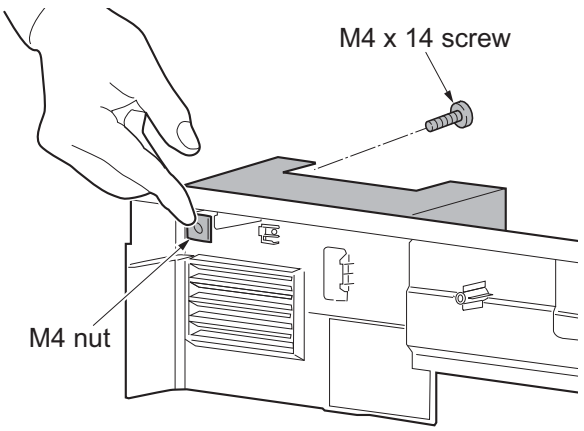

Figure 1-2-146

7. Fit the tray retainer to the machine using the M4 x 8 screw.
*: The procedure described above is not required if an optional right job separator has been installed.

8. Refit the right upper cover.
9. Refit the ISU right cover.
10. Close the paper conveying unit.

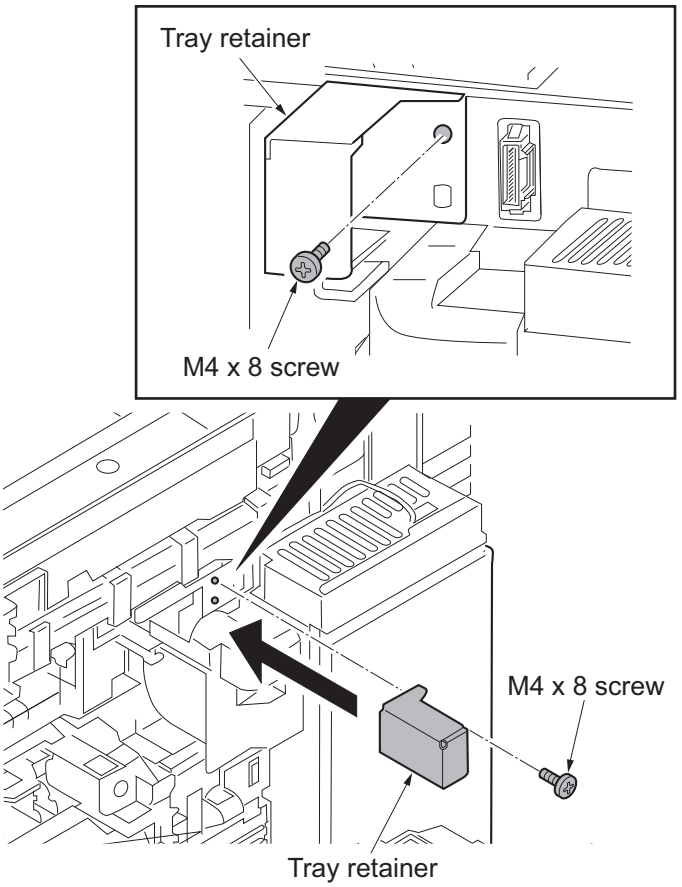

Figure 1-2-147

11. Snap in the tray mount to the tray stay and fix using two M4 x 8 screws.

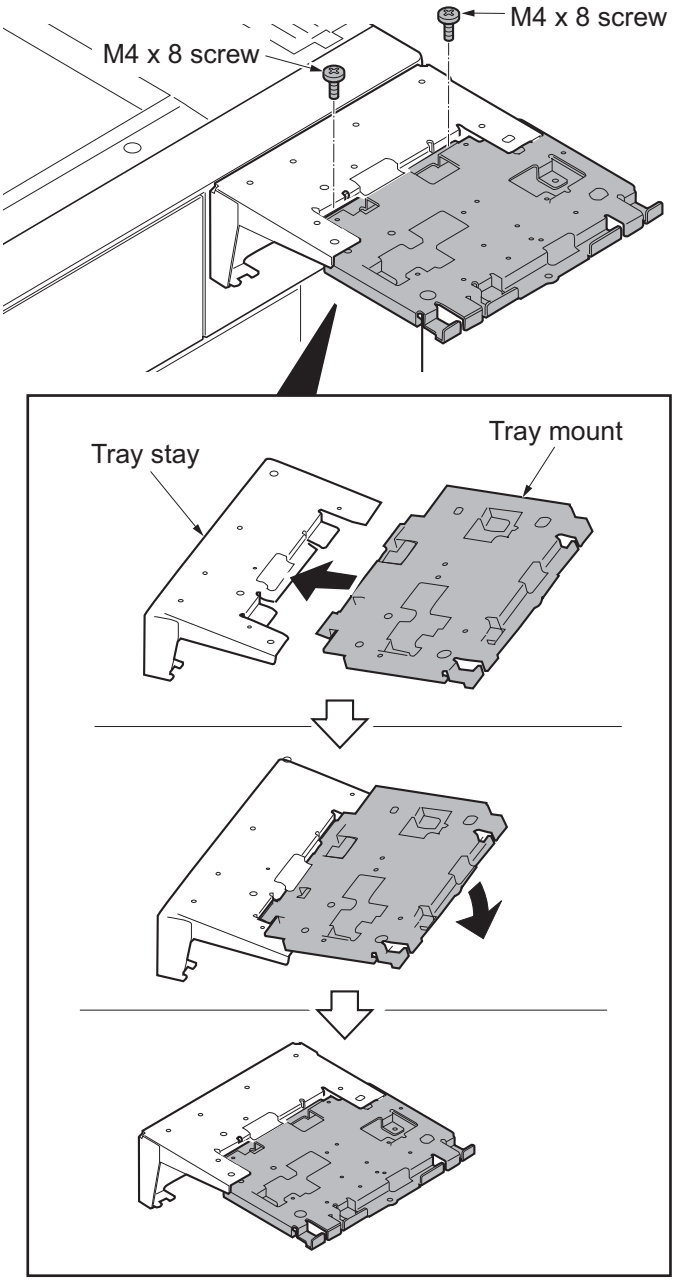

Figure 1-2-148

12. Fit the tray cover to the tray stay using four M4 x 8 screws.

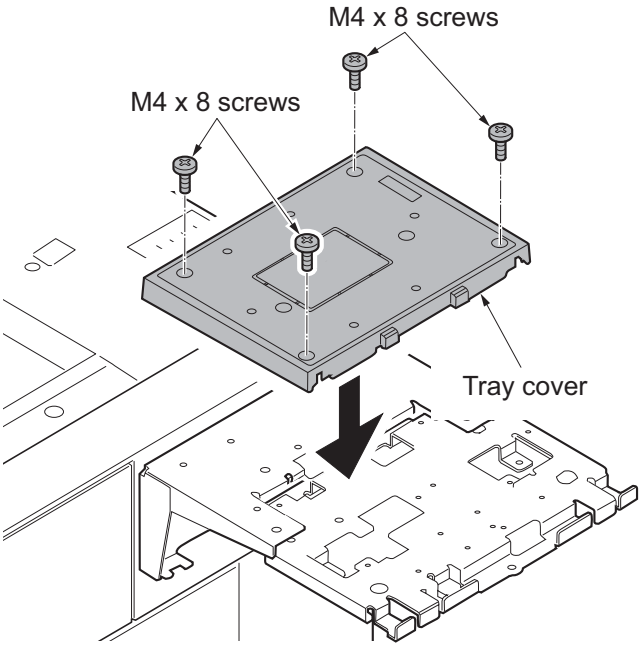

Figure 1-2-149

13. Remove two nuts and two pins from the handset mount.
14. Replace the two nuts and two pins which were removed at mark A on the tray mount.

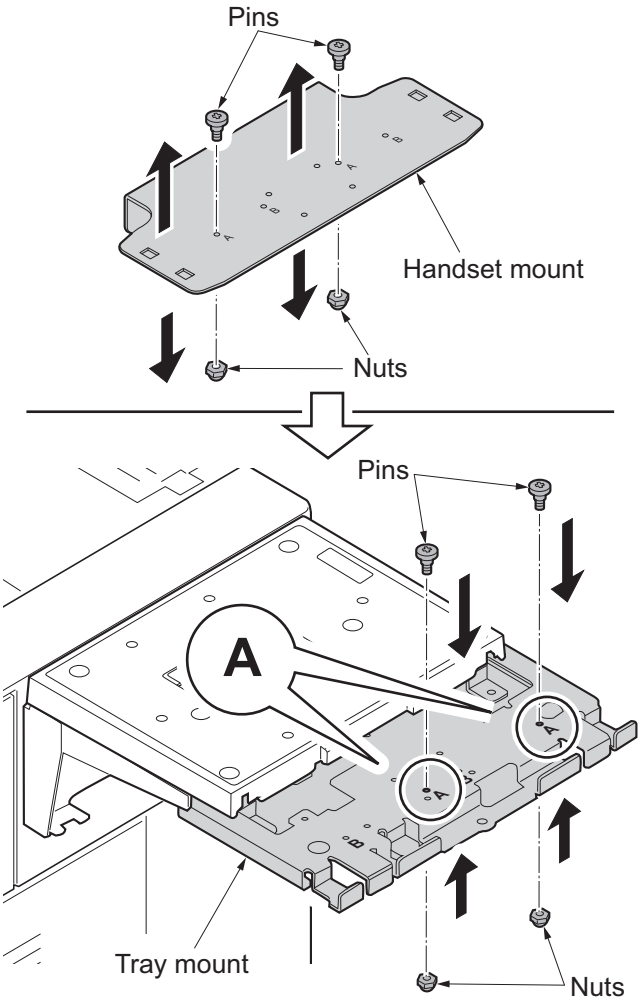

Figure 1-2-150

15. Insert the pins at the insert parts on the back of the handset base, and slide it towards you.

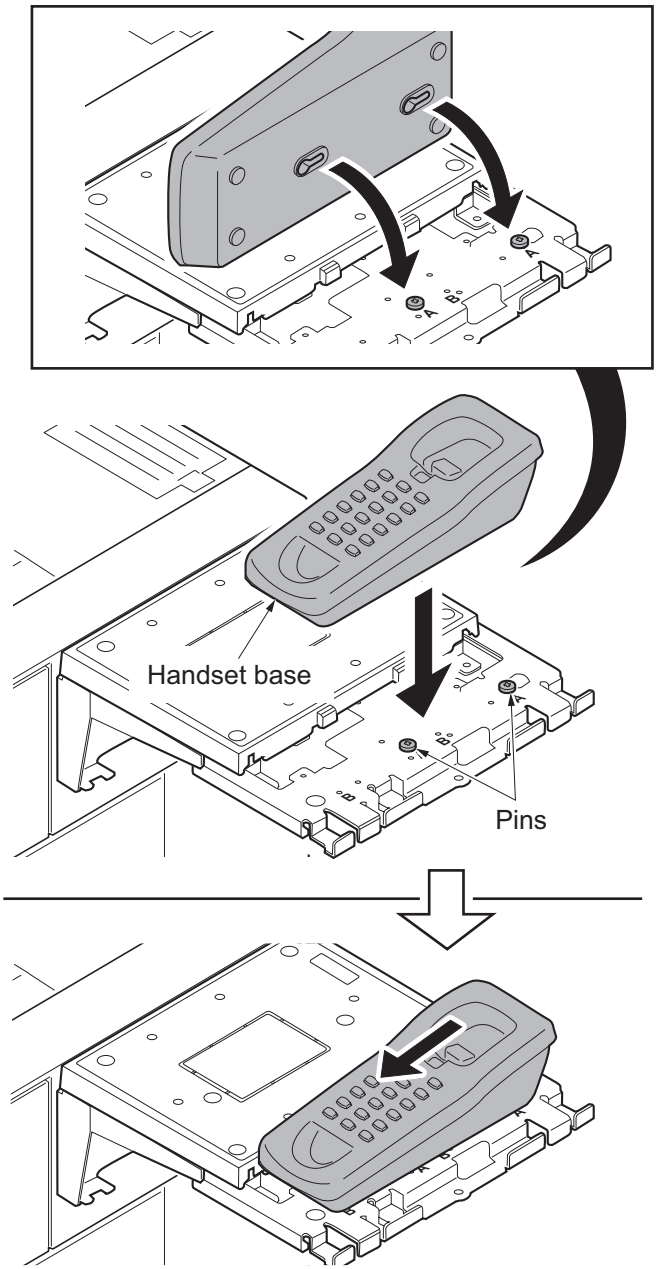

Figure 1-2-151

16. Cut out the breakaway cover on the tray lower cover using nippers.

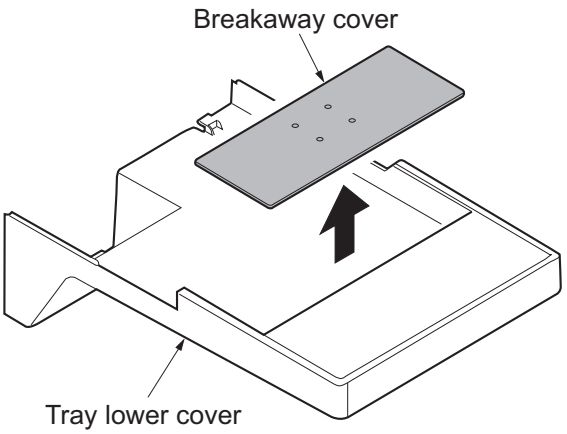

Figure 1-2-152

17. Fit the tray lower cover.
18. Secure the tray lower cover with two pins.

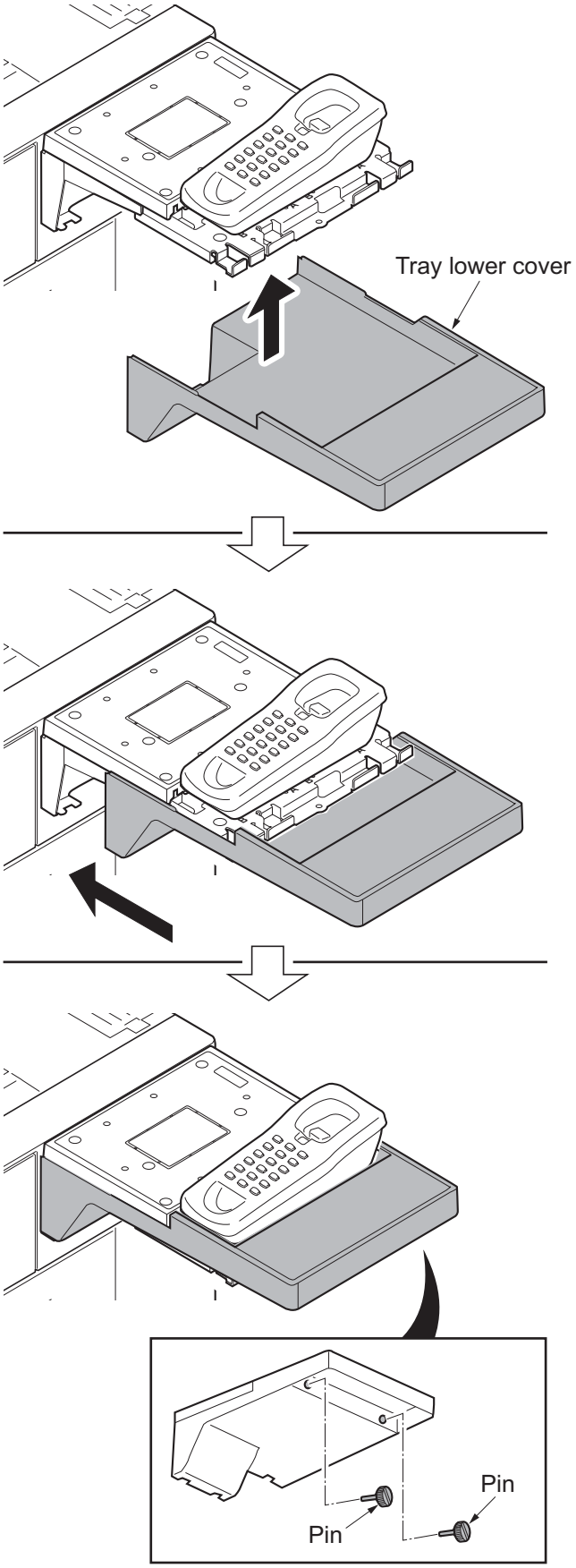

Figure 1-2-153

19. Adhere the sheet onto left side of the document table.

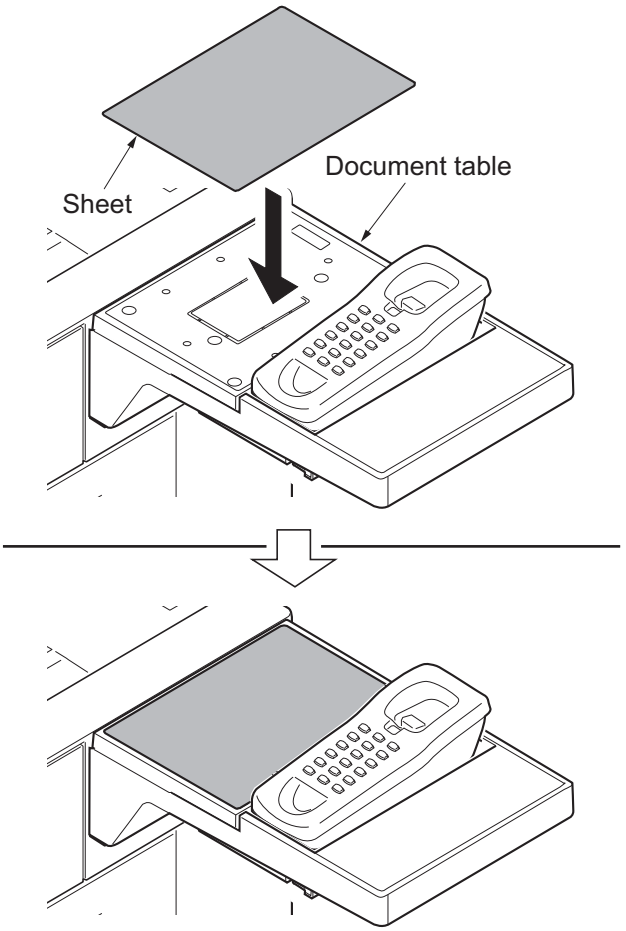

Figure 1-2-154

20. Connect the telephone wire to the handset and the handset base.

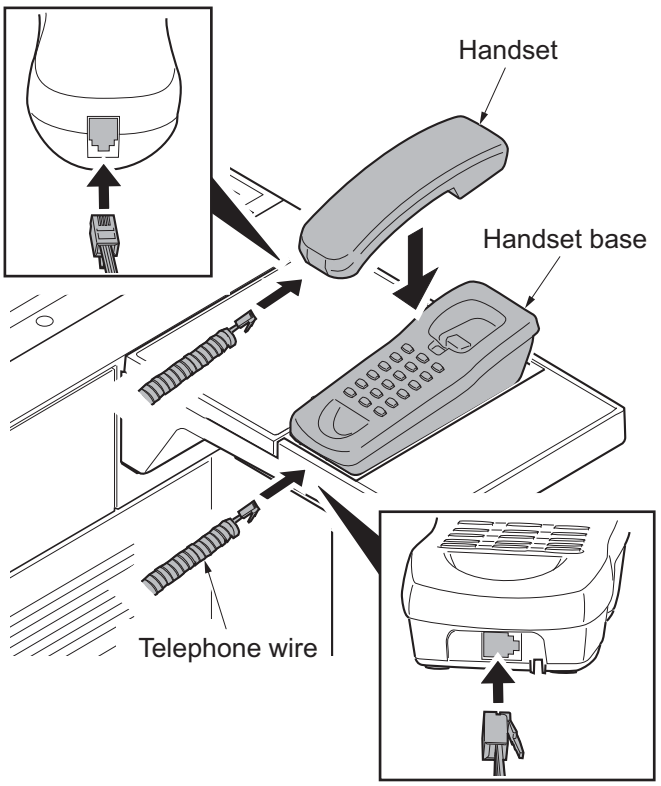

Figure 1-2-155

21. Connect the modular cable to the handset base and the machine.

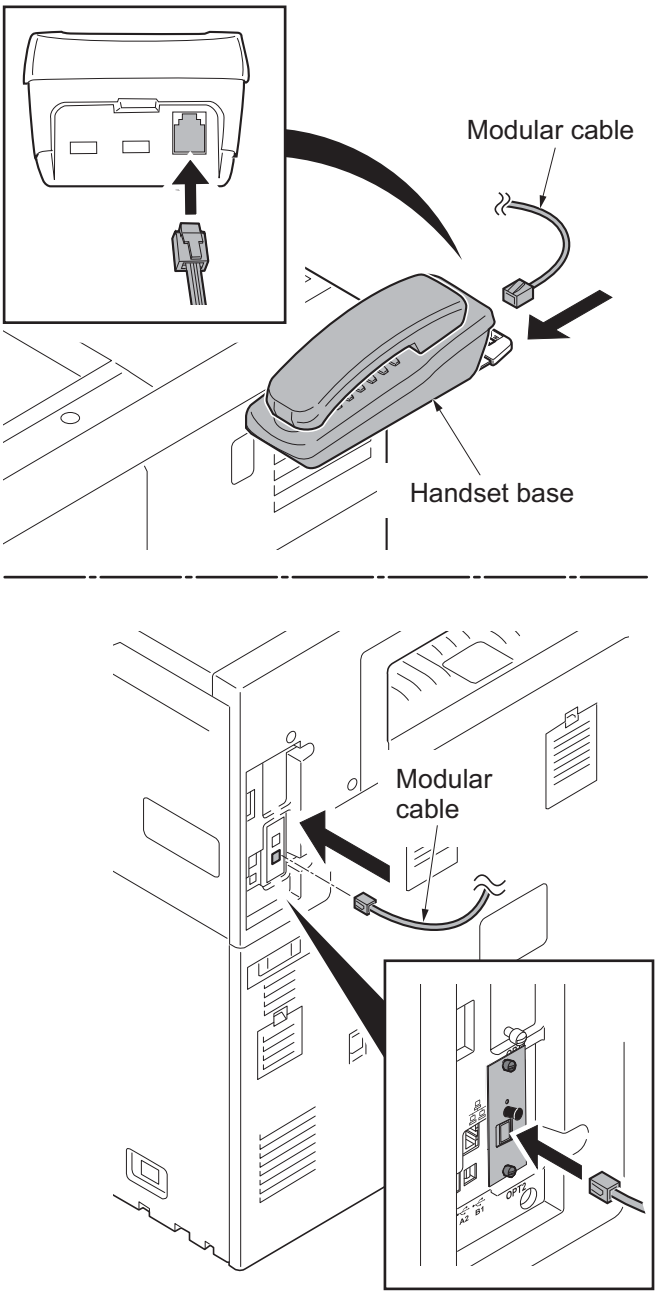

Figure 1-2-156

1-2-15 Optional Applications

Overview of the Applications
The applications listed below are installed on this machine.

Applications	INstall page
Data Security Kit	page 1-2-119
Internet FAX Kit	page 1-2-120
Card Authentication Kit*	page 1-2-124
ThinPrint Option (UG-33)*	page 1-2-125
Emulation Upgrade Kit (UG-34)	page 1-2-126

*: This can be used on a trial basis for a limited time.

Guides (PDF) on the DVD (Product Library)

Operation Guide
Explains how to load paper and perform copy, print and scan operations, and indicates default settings and other information.

FAX Operation Guide
Explains how to use the fax function.

Card Authentication Kit (B) Operation Guide
Explains how to perform authentication using the ID card.

Data Security Kit (E) Operation Guide
Explains how to introduce and use the Data Security kit (E), and how to initialize the system.

Command Center RX User Guide
Explains how to access the machine from a Web browser on your computer to check and change settings.

Printer Driver User Guide
Explains how to install the printer driver and use the printer function.

(1) Data Security Kit

The Data Security Kit overwrites all unnecessary data in the storage area of the hard disk so that it cannot be retrieved.
The Data Security Kit encrypts data before storing it in the hard disk. It guarantees higher security because no data cannot be decoded by ordinary output or operations.

Precautions before Installation

Installing the Data Security Kit will delete all data stored in the hard disk by the customer. Before installation, confirm with the customer if the data can be deleted.
To install the optional function, you need the License Key.
Issue of License Key requires the "Machine No" indicated on your machine, and "product ID."
Be sure to login the machine with the administrator privilege.

Installation Procedure

1. Press the System menu key and then press [System/Network]. If user login administration is disabled, the user authentication screen appears. Enter your login user name and password and then press [Login]. For this, you need to log in with administrator privileges.
2. Press [Next] of Optional Function.
3. The optional function screen is displayed. Select DATA SECURITY KIT(E) and press [Activate].
4. The license key entry screen is displayed. Enter the license key using the numeric keys and press [Official].
5. The confirmation screen appears. Confirm the product name DATA SECURITY KIT(E) and press [Yes]. Follow the onscreen instructions to turn the Main Power Switch off.
6. Turn the Main Power Switch on. The encryption code entry screen is displayed. Ask the customer to change the encryption code. Using the default value of the encryption code (00000000) will not affect the data security reliability. If the customer desires to change the code, lead the customer to follow the steps below.

Press [Encryption].
Press [Backspace] to delete 00000000. Enter the encryption code (8-digit alphanumeric characters) and then press [OK].
Remind the customer not to forget the encryption code entered.

7. Press [OK]. Hard disk formatting begins.
8. When formatting finishes, follow the onscreen instructions to turn the Main Power Switch off and on again.
9. After the opening screen is displayed, confirm that a hard disk icon ( ) is shown in the lower right corner of the screen.

Figure 1-2-157

*: For details, refer to the Data Security Kit (E) Operation Guide.

(2) Internet FAX Kit

Activating the Internet FAX Kit sends and receives faxes via the Internet without using a phone line.
It can only be added when the FAX Kit is installed.

*: To install the optional function, you need the License Key.
Issue of License Key requires the "Machine No" indicated on your machine, and "product ID."

Installation Procedure

1. Press the System menu key and then press [System/Network]. If user login administration is disabled, the user authentication screen appears. Enter your login user name and password and then press [Login]. For this, you need to log in with administrator privileges.
2. Press [Next] of Optional Function.
3. The optional function screen is displayed. Select “INTERNET FAXKIT(A)” and press [Activate].
4. The license key entry screen is displayed. Enter the license key using the numeric keys and press [Official].
5. The confirmation screen appears. Confirm the product name “INTERNET FAXKIT(A)” and press [Yes]. Follow the onscreen instructions to turn the Main Power Switch off.

i-FAX Settings

To send and receive Internet faxes, you must first specify the SMTP server and POP3 server settings.
Specify these settings using Command Center RX on a computer that is connected to this machine via a network.
Refer to the machine’s Operation Guide for information on the network settings.

Accessing Command Center RX

1. Launch your Web browser.
2. In the address or location bar, enter the machine’s IP address or the host name.
   Examples: 192.168.48.21/ (for IP address)
   MFP001 (if the host name is "MFP001")

Figure 1-2-158

*: When connecting to Command Center RX, a message may appear that reads "There is a problem with the security certificate of this website". To prevent this message from appearing, in "Protocol Settings", set "HTTP" to [On], or install the device certificate of this machine into your Web browser. For details, refer to the machine’s Operation Guide.

3. Enter the user name and password of the administrator, and click Login.
   *: Setting Administrator User Name, and Password restricts general users' access to pages other than the Start page. For security purposes, setting the Administrator password is highly recommended. The default Administrator password is factory-set as ‘Admin’.
4. Click ‘Function Settings’ from the navigation bar on the left to view and set values for that particular category.
5. Click ‘FAX / i-FAX’.
   The Transmit Settings dialog box will appear.
   *: For details, refer to the Command Center RX User Guide.

i-FAX Default Settings
Use this page to enable the internet faxing.
The settings available on the page are shown below.

Item			Description
Common Settings	Transmission	Local FAX Name	Enter the local fax name.
		TTI Selects	On or Off whether to send the TTI (Transmit Terminal Identifier) information to the other party.
		TTI Position	Selects the position of the TTI to be printed on the transmitted documents.
		Dept. Name Usage	Set to On to use the account name as the local FAX name. The account name appears in place of the local FAX name.
		Retry Times	Specify the number of redials from 0 to 14 times.
	Reception	Media Type	Sets the media type for printing the received documents.
		Use MP Tray	Selects whether or not to include the MP (multi purpose) tray for auto media selection when printing received documents. When turned [On], the MP tray will be included as an option for auto media selection, and when turned [Off], only the cassettes will be selected.
		Reduced RX Size	Specifies the printing configuration for printing a document, which is larger than the selected paper size. When [Same Size Override] is selected, the document will be printed on multiple sheets of paper without reducing the text. When [Reduction Override] is selected, the document will be printed on one sheet whenever possible.
		Receive Date/Time	Selects [On] or [Off] whether to print the reception information such as the received date, the received time, the transmitting party's information and the number of transmitted pages on the top of the received documents.
		Duplex Printing	Specifies whether or not to use the Duplex mode.
		2in1 Printing	Enables or disables 2 in1 reception.
FAX Settings			Configure settings for FAX. For details, refer to the Command Center RX User Guide.
i-FAX Settings	TX/RX	i-FAX Protocol*1	Display whether an i-FAX connection is available or not. Configure i-FAX in [i-FAX (SMTP & POP3)] on the Protocol Settings page.
	SMTP	SMTP Server Name*2	Enter the SMTP server name or SMTP server IP address. You can enter up to 64 characters. If you enter the server name, you must specify the IP address of the DNS server. You can enter the DNS server IP address in the TCP/IP settings screen. Refer to the machine's Operation Guide for details.

Item				Description
i-FAX Settings	SMTP	SMTP Port Number		Set the port number used by SMTP. Normally, 25 is used.
		SMTP Server Timeout		Enter the timeout period in seconds.
		Authentication Protocol		Specify whether SMTP authentication will be used or whether [POP before SMTP] will be used. This SMTP authentication is compatible with Microsoft Exchange 2000.
		SMTP POP before SMTP Timeout		If you selected [POP before SMTP] in the authentication setting, specify the timeout period in seconds.
		Connection Test		Tests to confirm that the settings on this page are correct. When the [Test] button is pressed, this machine tries to connect to the SMTP server.
		Domain Restriction		Activate or deactivate to restrict domains. Press the [Domain List] button to configure. Enter a domain name that is permitted or rejected. You can also specify the Email addresses.
	POP3	Check Interval		Displays the interval, in minutes, for connecting to the POP3 server to check for incoming e-mails at specific interval. Specify the interval in the range from 3 minutes to 60 minutes. The default is 15 minutes.
		Run once now		Click [Receive] to immediately connect to the POP3 server and check for incoming E-mail.
		Domain Restriction		Activate or deactivate to restrict domains. Press the [Domain List] button to configure. Enter a domain name that is permitted or rejected. You can also specify the Email addresses.
		POP3 User Settings		—
			E-mail Address*1	Enter the i-FAX address (E-mail address). You can enter up to 64 characters.
			POP3 Server Name*1	If you enter the server name, you must specify the IP address of the DNS server. You can enter the DNS server IP address in the TCP/IP settings screen. Refer to the machine's Operation Guide for details.
			POP3 Port Number	Sets the port number used by POP3. Normally, 110 is used.
			POP3 Server Timeout	Enter the timeout period in seconds.
			Login User Name*1	Enter the login name for the user account. You can enter up to 64 characters.
			Login Password*1	Enter the password for the user account. You can enter up to 64 characters.
			Use APOP	Specify whether to use APOP authentication. To use APOP authentication, select [On] in this setting.

Item				Description
i-FAX Settings	POP3		Test	Runs a test to determine whether the settings specified in this page are correct.
			E-mail Size Limit	Enter the maximum size for E-mails that can be received in kilobytes. You can set up to 32,767 kilobytes. If 0 is entered, the setting does not limit the maximum size.
			Cover Page	Specify whether the E-mail messages are also printed. Select [On] to print faxes with a cover page attached. If the E-mail message includes text, the text is printed on the cover page.
	Transmission	Transmission Type		Allows to choose a method of sending from [Specify for Each Destination], [Via server - On], and [Via server - Off (Direct SMTP)].
		Direct SMTP Sender Address*1		Displays the sender address used for E-mails sent by Direct SMTP from this machine.
		Direct SMTP Port Number		Enter the port number used by Direct SMTP. Normally, 25 is used.
		Direct SMTP Timeout		Sets the timeout time in seconds during which this device retries to connect to the SMTP server.
	Reception	Direct SMTP Port Number		Enter the port number used by Direct SMTP. Normally, 25 is used.
		Direct SMTP Timeout		Sets the timeout time in seconds during which this device retries to connect to the SMTP server.
	E-mail Send Settings	E-mail Size Limit		Enter the maximum size of E-mail that can be sent in Kilobytes. When the value is 0, the limitation for E-mail size is disabled.
		Sender Address*2		Displays the sender address used for E-mails sent from this machine. Set in [E-mail Address] in POP3 User Settings.
		Signature		Displays the signature to be inserted in the end of the Email body. Set on the [E-mail Settings] page.
		Function Default		The default settings can be changed in [Common/Job Default Settings] page.

*: After completing the settings, click [Submit] to save the settings.
*1: When Direct SMTP is used, this must always be set.
*2: When Internet FAX is used, this must always be set.

*: For details, refer to the FAX Operation Guide.

(3) Card Authentication Kit

This prevents the unauthorized copying and/or transmission of documents that contain important confidential or personal information. When a document is printed from a computer, this feature imprints a special pattern on the document. When anyone attempts to copy or send that document on this machine, the machine detects the pattern and protects the information by printing the document in blank and prohibiting transmission.

*: To install the optional function, you need the License Key.
Issue of License Key requires the "Machine No" indicated on your machine, and "product ID."

Installation Procedure

1. Press the System menu key and then press [System/Network]. If user login administration is disabled, the user authentication screen appears. Enter your login user name and password and then press [Login]. For this, you need to log in with administrator privileges.
2. Press [Next] of Optional Function.
3. The optional function screen is displayed. Select “CARD AUTHENTICATIONKIT(B)” and press [Activate].
4. The license key entry screen is displayed. Enter the license key using the numeric keys and press [Official].
5. The confirmation screen appears. Confirm the product name “CARD AUTHENTICATIONKIT(B)” and press [Yes]. Follow the onscreen instructions to turn the Main Power Switch off.

*: To use a SSFC card, run maintenance mode U222 and set SSFC.

Setting User Login

1. Make the settings of Local Authentication in User Login/Job Accounting or User Login on the machine.

*: For User Login setting, refer to Management in the Operation Guide of the machine.
When you enable User Login on the machine, you need to make the setting of user account for the printer driver in order to print by the computer. For details, refer to the Printer Driver User Guide, Device Settings, and Administrator Settings.

Registering/deleting the ID card information

The procedures below are to register or delete the card information of a pre-registered user.
For new registration or change of user information on Local User List, refer to Management in the Operation Guide of the machine.

To register the ID card information

To login using the ID card, you need to register the ID card information in the user information.
Follow the steps below.

1. Press the System Menu key.

*: If Local Authentication has been set in User Login, the ID Card Login screen appears. Refer to Login on the next page or the procedure of Keyboard Login, and login using the ID card registered with administrator privileges or using the login user name.

2. Press [User Login/Job Accounting].

*: If User Login is disabled, the ID Card Login screen appears. Refer to Login on the next page or the procedure of Keyboard Login, and login using the ID card registered with administrator privileges or using the login user name.

3. In User Login Setting, press [Next] → [Local User List], and then [Register/Edit].
4. Select the user for whom you wish to register the ID card information, and press [Detail].
5. Press [Change] in [ID Card information].
6. Hold the ID card to be registered over the card reader.
   Completed. appears and the screen returns to the Detail menu.
7. In the Detail menu, press [Register]. The confirmation screen appears.
8. Press [Yes]. The ID card information is now registered.

To register on the computer

The ID Register utility for registering/deleting ID card information on the computer is provided.
You can download the ID Register utility from the vendor’s website.

(4) ThinPrint Option

This application allows print data to be printed directly without a print driver.

*: To install the optional function, you need the License Key.
Issue of License Key requires the "Machine No" indicated on your machine, and "product ID."

Installation Procedure

1. Press the System menu key and then press [System/Network]. If user login administration is disabled, the user authentication screen appears. Enter your login user name and password and then press [Login]. For this, you need to log in with administrator privileges.
2. Press [Next] of Optional Function.
3. The optional function screen is displayed. Select “UG-33” and press [Activate].
4. The license key entry screen is displayed. Enter the license key using the numeric keys and press [Official].
5. The confirmation screen appears. Confirm the product name “UG-33” and press [Yes]. Follow the onscreen instructions to turn the Main Power Switch off.

(5) Emulation Upgrade Kit

Enables emulation whereby the machine operates using commands for other printers. Installing this option enables IBM Proprinter, Line Printer, and EPSON LQ-850 emulation.

To install the optional function, you need the License Key.
Issue of License Key requires the "Machine No" indicated on your machine, and "product ID."

Installation Procedure

1. Press the System menu key and then press [System/Network]. If user login administration is disabled, the user authentication screen appears. Enter your login user name and password and then press [Login]. For this, you need to log in with administrator privileges.
2. Press [Next] of Optional Function.
3. The optional function screen is displayed. Select “UG-34” and press [Activate].
4. The license key entry screen is displayed. Enter the license key using the numeric keys and press [Official].
5. The confirmation screen appears. Confirm the product name “UG-34” and press [Yes]. Follow the onscreen instructions to turn the Main Power Switch off.

1-3-1 Maintenance mode

The machine is equipped with a maintenance function which can be used to maintain and service the machine.

(1) Executing a maintenance item

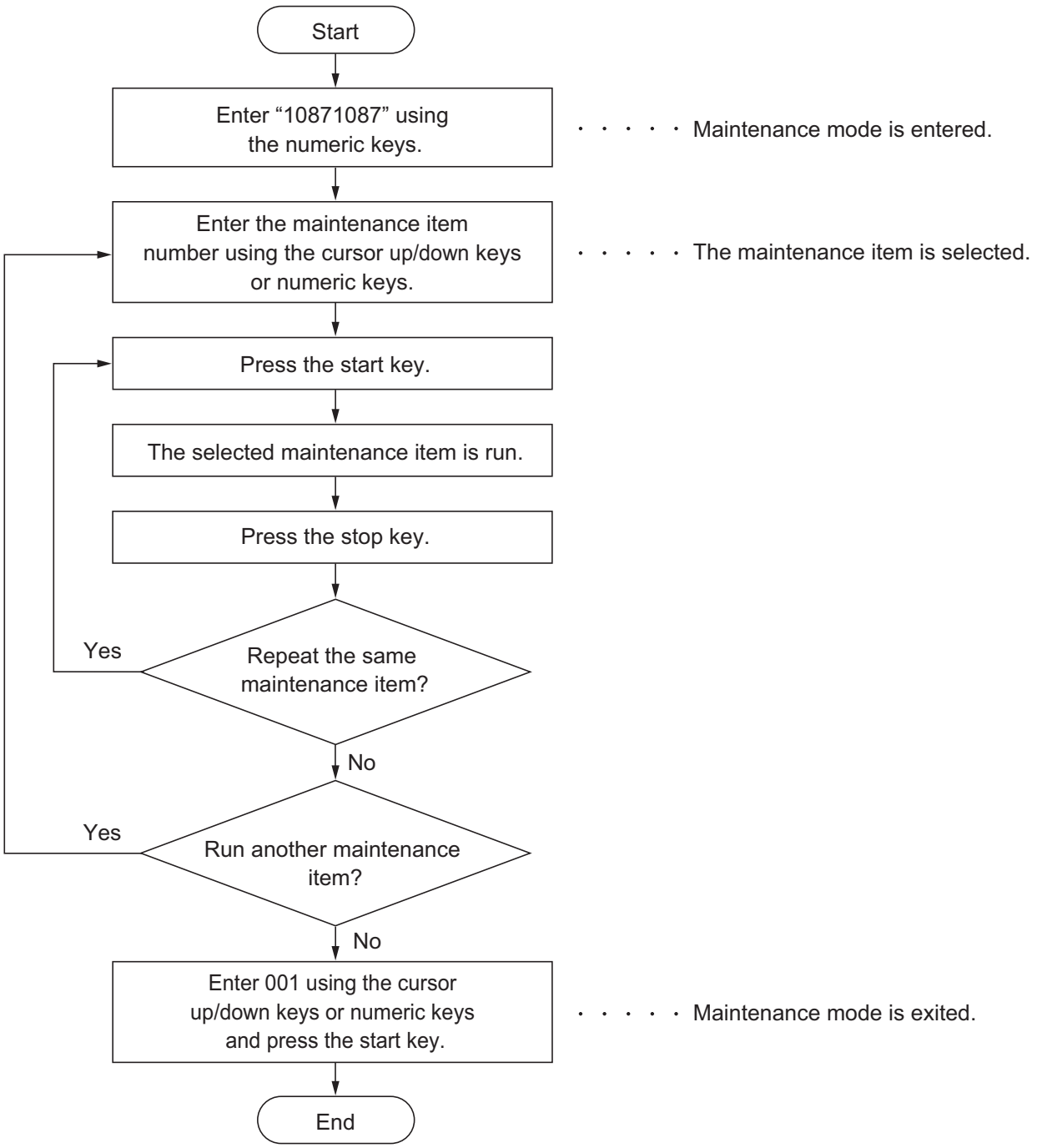

(2) Maintenance modes item list

Section	Item No.	Content of maintenance item	Initial setting			
			30ppm	35ppm	45ppm	55ppm
General	U000	Output Maintenance Report	-			
	U001	Exiting the maintenance mode	-			
	U002	Setting the factory default data	-			
	U003	Setting the service telephone number	-			
	U004	Setting the machine number	-			
	U010	Setting the maintenance mode ID	-			
	U018	Check Firmware Checksum	-			
	U019	Firmware Version	-			
Initializa-tion	U021	Memory initializing	-			
	U024	HDD formatting	-			
	U025	Firmware Update(Security)	-			
	U026	Pulling Backup Data	-			
Drive, paper feed and paper convey-ing sys-tem	U030	Checking the operation of the motors	-			
	U031	Checking switches and sensors for paper conveying	-			
	U032	Checking the operation of the clutches	-			
	U033	Checking the operation of the solenoids	-			
	U034	Adjusting the print start timing				
		LSU Out Top	0/0/0/0/0/0/0/0/0/0/0/0			
		LSU Out Left	0/0/0/0/0/0/0		0/0/0/0/0/0/0/0/0	
		LSU Out Top B/W	-			0/0/0/0/0/0
		LSU Out Top 3/4	0/0/0/0/0/0			
	U035	Setting the printing area for folio paper	330/210			
	U037	Checking the operation of the fan motors	-			
	U039	Adjusting the magnification	0			
	U051	Adjusting the deflection in the paper				
		Paper Loop Amount	1/1/1/1/1/1 1/1/1/1/1/1		-5/0/-5/0/ -5/0/-5/0 -6/-1/-5/0	-7/-1/-7/-1/ -7/-1/-7/-1/ -8/-2/-7/-1
		Paper Loop Amount B/W	-			-8/-8/-8/ -8/-8/-8
		Paper Loop Amount 3/4	1/1/1/1/1/1		-2/-2/-2/-2/-3/-2	
	U052	Setting the fuser motor control				
		Set Loop Sensor	-			
		Loop Sensor Control	On/On/On/On			
		Set Loop Sensor Valid	On			

Section	Item No.	Content of maintenance item	Initial setting			
			30ppm	35ppm	45ppm	55ppm
Drive, paper feed and paper convey-ing sys-tem	U053	Setting the adjustment of the motor speed				
		Motor1	19	16	12	11
		Motor2	0/0/0/-/0		0/0/0/17/0	0/0/0/15/0
		Motor3	-31/0/-46/ -46/39/0/ -/-/-/ 0/0/0/0	-26/0/-39/ -39/33/0/ -/-/-/ 0/0/0/0	-20/0/-30/ -30/82/0/ 18/-30/-30/ 0/0/0/0	-18/0/-27/ -27/73/0/ 16/-27/-27/ 0/0/0/0
		Motor4	-/42	-/36	-/28	25/22
		Motor5	-			0/0/14/0
		Motor6	-			-16/0/-25/ -25/66/0/ 15/-24/-24
		Motor1 Half	0			
		Motor2 Half	0/0/0/-/0		0/0/0/34/0	0/0/0/30/0
		Motor3 Half	-61/0/-65/ -65/77/0/ -/-/-	-52/0/-55/ -55/66/0/ -/-/-	-41/0/-43/ -43/164/0/ 36/-60/-60	-36/0/-38/ -38/147/0/ 32/-54/-54
		Motor1 3/4	0			
		Motor2 3/4	0/0/0/-/0		0/0/0/22/0	
		Motor3 3/4	-40/0/-61/ -61/50/0/ -/-/-	-36/0/-54/ -54/45/0/ -/-/-	-26/0/-39/-39/106/0/ 23/ -39/-39	
	U059	Setting fan mode				
		Fan Mode	Mode1			
		Cooling Mode	0			
Optical	U061	Checking the operation of the exposure lamp	-			
	U063	Adjusting the shading position	0			
	U065	Adjusting the scanner magnification	0/0			
	U066	Adjusting the scanner leading edge reg-istration	0/0			
	U067	Adjusting the scanner center line	0/0			
	U068	Adjusting the scanning position for origi-nals from the DP	0/0			
	U070	Adjusting the DP magnification	0/0/0/0			
	U071	Adjusting the DP scanning timing	0/0/0/0			
	U072	Adjusting the DP center line	0/0/0			
	U073	Checking the scanner operation	100/10200/1			
	U074	DP input response adjustment	1			

Section	Item No.	Content of maintenance item	Initial setting			
			30ppm	35ppm	45ppm	55ppm
Optical	U087	Setting DP reading position modification operation	125/125/125			
	U089	Outputting a MIP-PG pattern	-			
	U091	Setting the white line correction	112/112/112/75/0			
	U099	Adjusting original size detection	DP is not installed 20/30/40/20/30/40/20/30/40 DP is installed 50/50/50/50/50/50/50/50/50			
High voltage	U100	Adjusting main high voltage				
		Adj AC Bias	-			
		Set AC Auto Adj	On			
		Set DC Bias	-			
		Adj DC Bias	0/0/0/0/0/0/0/0			0/0/0/0/0/ 0/0/0/0
		Set Low Temp	1			
		Set Charger Freq	10442/ -/ 10690/ 10690	8857/ -/ 10690/ 10690	8807/ -/ 10690/ 8857	11022/ 10690/ 10690 8857
		Chk Current	-			
		Set AC Gain	Auto			
	U101	Setting the voltage for the primary transfer				
		Normal Full	114	118	126	131
		Normal Half	101	103	108	110
		Normal 3/4	110	110	118	118
		Normal B/W	-			135
		Add Color Normal (CMYK)	2/2/15			
		Add Color Heavy4/5 (CMYK)	-4/-4/-2/-17		-5/-5/-3/-18	-6/-6/-4/-19
		Add Color 2nd Normal (CMYK)	-3/-3/-2/-14			
		Add Color 2nd Heavy4/5 (CMYK)	-4/-4/-2/-17		-5/-5/-3/-18	-6/-6/-4/-19
		Surround Correct	Off			

Section	Item No.	Content of maintenance item	Initial setting			
			30ppm	35ppm	45ppm	55ppm
High voltage	U106	Setting the voltage for the secondary transfer				
		Light/Normal 1st Normal2/3 1st	125/118/110	131/123/115	143/134/120	150/139/128
		Light/Normal 2nd Normal2/3 2nd	167/133/112	180/140/116	207/155/124	220/163/128
		Light/Normal 1st 3/4(Gloss) Normal2/3 1st 3/4(Gloss)	120/114/111		131/123/120	
		Light/Normal 2nd 3/4(Gloss) Normal2/3 2nd 3/4(Gloss)	155/126/111		180/140/120	
		Light/Normal 1st B/W Normal2/3 1st B/W	-			150/144/128/
		Light/Normal 2nd B/W Normal2/3 2nd B/W	-			183/171/128
		Heavy1 1st 3/4	121/118/115		133/129/124	
		Heavy1 2nd 3/4	137/133/115		155/150/124	
		Heavy2/3 1st Half	114/111/109	118/115/112	126/123/119	130/127/122
		Heavy2/3 2nd Half	126/123/109	132/128/112	144/140/119	151/146/122
		Heavy4/5 1st Half	114/111/104	118/115/107	126/123/113	130/127/116
		Heavy4/5 2nd Half	126/123/104	132/128/107	144/140/113	151/146/116
		OHP	118/115/112	123/120/116	134/129/124	139/133/128
		Bias	1/1/1/-/122/114/121	1/1/1/-/127/118/121	1/1/1/-/138/126/133	1/1/1/1/143/130/133
	U107	Setting the transfer cleaning voltage				
		Belt(A)	187/172/182/-	192/175/182/-	202/180/192/-	207/182/192/212
		Belt(B)	120/100/110/-	130/100/110/-	150/110/130/-	160/110/130/160
	U108	Setting separation shift bias				
		Output	55/55/55/55/0/0			
		Output 3/4	55/55/55/55			
		Output B/W	-			55/55/55/55
		Timing	0/0/0			
		Subtraction Value	-35			

Section	Item No.	Content of maintenance item	Initial setting			
			30ppm	35ppm	45ppm	55ppm
High voltage	U110	Checking the drum count	-			
	U111	Checking the drum drive time	-			
	U117	Checking the drum number	-			
	U118	Displaying the drum history	-			
	U119	Setting the drum	-			
	U122	Checking the transfer belt unit number	-			
	U123	Displaying the transfer belt unit history	-			
	U127	Checking/clearing the transfer count	-			
	U128	Setting transfer high-voltage timing	-5/0/20	-5/0/16	-5/0/13	-5/0/10
Developer	U130	Initial setting for the developer	-			
	U131	Adjusting the toner sensor control voltage	-			
		Manual	150/150/150/150			
		Mode	Auto			
	U132	Replenishing toner forcibly	-			
	U135	Checking toner motor operation	-			
	U136	Setting toner near end detection	3/3			
	U139	Displaying the temperature and humidity outside the machine	-			
	U140	Displaying developer bias				
		Sleeve DC	72/72/72/62/-		84/84/84/70/-	84/84/84/70/70
		Sleeve AC	175/175/175/175/-		155/155/155/155/-	155/155/155/155/155
		Mag DC	130/130/130/130/-		155/155/155/155/-	155/155/155/155/155
		Mag AC	101/101/101/101/-		160/200/200/200/-	160/200/200/200/160
		Sleeve Freq	5221/-/5345/5345	5345/-/5345/5345	5345/-/5345/5345	5511/5345/5345/5345
		Sleeve Duty	63/-		43/-	43/43
		Mag Duty	37/-		68/-	68/68
		AC Calib Magnification	-		15/15/15/12	
		High Altitude	0		Mode1	

Section	Item No.	Content of maintenance item	Initial setting			
			30ppm	35ppm	45ppm	55ppm
Developer	U140	Image Preference Copy	0			
	U147	Setting for toner applying operation				
		Mode	Mode1			
		Upper Limit	2.0			
		Minimum	10			
		Interval Number	250/100/50			
	U148	Setting drum refresh mode				
		Normal	2			
		Dew Condensation	0			
	U155	Checking sensors for toner	-			
	U156	Setting the toner replenishment level				
		Supply	512/512/512/512/-			512/512/512/512/512
		Empty	100/100/100/100/-			100/100/100/100/100
	U157	Checking the developer drive time	-			
	U158	Checking the developer count	-			
Fuser	U161	Setting the fuser control temperature				
		Warm Up	155/110/40/165/155/150/50/120	160/110/40/170/165/150/50/120	165/140/80/170/165/150/50/155	170/145/80/175/175/150/50/160
		Print	165/5	170/5	170/5	175/5
		Low Powe Mode	-		Mode0	
		Grain Mode	Mode0			
		Ready Time Adjust	5			
	U167	Checking/clearing the fuser count	-			
	U169	Checking/setting the fuser power source	-			
	U199	Displaying fuser heater temperature	-			
Operation panel and support equip-ment	U200	Turning all LEDs on	-			
	U201	Initializing the touch panel	-			
	U202	Setting the KMAS host monitoring sys-tem	-			
	U203	Checking DP operation	-			

Section	Item No.	Content of maintenance item	Initial setting			
			30ppm	35ppm	45ppm	55ppm
Operation panel and support equip-ment	U204	Setting the presence or absence of a key card or key counter	Off/Coin Vender			
	U206	Setting the presence or absence of a coin vender				
		On/Off Config	Off			
		No Coin Action	Off			
		Price				
		Normal/AD	10/10/10/10/100/50/30/50/ 100/50/30/50/100/50/30/50			
		Print	10/10/10/10/100/50/30/50			
		Apl	10/10/10/10			
		Boot Mode	Copy Service			
		Apl Charge Mode	Off			
	U207	Checking the operation panel keys	-			
	U208	Setting the paper size for the side deck	Letter (Inch)/A4 (Metric)			
	U209	Set RTC (Real Time Clock) Date	-			
	U211	Setting the presence or absence of the job separator	Off			
	U221	Setting the USB host lock function	Off			
	U222	Setting the IC card type	Other			
	U223	Operation panel lock	Unlock			
	U224	Panel sheet extension	-			
	U234	Setting punch destination	Inch (Inch)/Europe Metric (Metric)			
	U237	Setting finisher stack quantity	0/0			
	U240	Checking the operation of the finisher	-			
	U241	Checking the operation of the switches of the finisher	-			
	U243	Checking the operation of the DP motors	-			
	U244	Checking the DP switches	-			
	U245	Checking messages	-			
	U246	Setting the finisher				
		Finisher	0/0/0/0/0/0/0/0			
		Booklet	0/0/0/0/0/0/0/0/0			
	U247	Setting the paper feed device	-			
	U249	Finisher operation test	-			

Section	Item No.	Content of maintenance item	Initial setting			
			30ppm	35ppm	45ppm	55ppm
Mode setting	U250	Checking/clearing the maintenance cycle	600000/600000/600000/0/150000/150000/150000/150000/150000/150000/150000/			
	U251	Checking/clearing the maintenance counter	0/0/0/0/0/0/0/0/0/0/0/			
	U252	Setting the destination	-			
	U253	Switching between double and single counts	DBL(A3/Ledger)			
	U260	Selecting the timing for copy counting	Eject			
	U265	Setting OEM purchaser code	-			
	U271	Setting the page count	2/3			
	U276	Setting the copy count mode	Mode0			
	U278	Setting the delivery date	-			
	U284	Setting 2 color copy mode	On			
	U285	Setting service status page	On			
	U323	Setting abnormal temperature and humidity warning	On			
	U325	Setting the paper interval	Off/1			
	U326	Setting the black line cleaning indication	On/8			
	U327	Setting the cassette heater control	Off			
	U332	Setting the size conversion factor				
		Rate	1.0			
		Mode	0			
		Level 1	1.0			
		Level 2	2.5			
	U340	Setting the applied mode				
		Adj Memory	0			
		Adj Max Job	Copy:10 / Printer:50			
	U341	Specific paper feed location setting for printing function	-Off			
	U343	Switching between duplex/simplex copy mode	Off			
	U345	Setting the value for maintenance due indication	0			
	U346	Selecting Sleep Mode	On			
Image process-ing	U402	Adjusting margins of image printing	4.5/2.2/2.2/2.2			
	U403	Adjusting margins for scanning an origi-nal on the contact glass	2.0/2.0/2.0/2.0			
	U404	Adjusting margins for scanning an origi-nal from the DP	2.0/2.0/2.0/2.0/2.0/2.0/2.0/2.0			

Section	Item No.	Content of maintenance item	Initial setting			
			30ppm	35ppm	45ppm	55ppm
Image process-ing	U407	Adjusting the leading edge registration for memory image printing	0			
	U410	Adjusting the halftone automatically	-			
	U411	Adjusting the scanner automatically	-			
	U412	Adjusting the uneven density	-			
	U415	Adjusting the print position automatically	-			
	U425	Setting the target	-			
	U429	Setting the offset for the color balance	0/0/0/0			
	U460	Adjusting the conveying sensor				
		Conveying Sensor	0/0			
		On/Off Config	Off			
	U464	Setting the ID correction operation				
		Permission	On			
		Time Interval	480			
		Mode	Normal			
		On/Sleep Out	On			
		AP/NE	On			
		Leaving Time	480			
		Driving Time	300			
		Timing	3600			
		Target Value	890/910/910/130/320/320/300/350	890/910/910/130/320/320/300/350	890/910/910/130/320/320/300/350	
		Print Rate(B/W)	50			
		Calib	-			
		Solid Image	Off			
	U465	Data reference for ID correction	-			
	U467	Setting the color registration adjustment				
		Color Regist	On			
		Timing	10			
	U468	Checking the color registration data	-			
	U469	Adjusting the color registration	-			
	U470	Setting the JPEG compression ratio				
		Copy	90/90/90/90			
		Send	30/40/51/70/90/30/40/51/70/90 30/40/51/70/90/30/40/51/70/90 15/25/90/15/25/90/ 15/25/90/15/25/90			

Section	Item No.	Content of maintenance item	Initial setting			
			30ppm	35ppm	45ppm	55ppm
Image process-ing	U470	System	90/90			
	U474	Checking LSU cleaning operation	1000			
	U485	Setting the image processing mode	1/0			
	U486	Setting color/black and white operation mode	Mode2			
Others	U520	Set TDRS	-			
	U901	Checking copy counts by paper feed locations	-			
	U903	Checking/clearing the paper jam counts	-			
	U904	Checking/clearing the call for service counts	-			
	U905	Checking counts by optional devices	-			
	U906	Resetting partial operation control	-			
	U908	Checking the total counter value	-			
	U910	Clearing the print coverage data	-			
	U911	Checking copy counts by paper sizes	-			
	U917	Setting backup data reading/writing	-			
	U920	Checking the copy counts	-			
	U927	Clearing the all copy counts and machine life counts (one time only)	-			
	U928	Checking machine life counts	-			
	U930	Checking/clearing the charger roller count	-			
	U933	Set Maintenance Mode Execute Log	-			
	U942	Setting of deflection for feeding from DP	0/0/0			
	U952	Maintenance mode workflow	-			
	U964	Checking of log	-			
	U969	Checking of toner area code	-			
	U977	Data capture mode	-			
	U978	Clear Optional Function	-			
	U984	Checking the developer unit number	-			
	U985	Displaying the developer unit history	-			
	U989	HDD Scan disk	-			
	U990	Checking the time for the exposure lamp to light	-			
	U991	Checking the scanner operation count	-			

Contents of the maintenance mode items

Item No.	Description
U000	**Output Maintenance Report** **Description** Outputs lists of the current settings of the maintenance items, and paper jam and service call occurrences. Outputs the event log or service status page. Also sends output data to the USB memory. **Purpose** To check the current setting of the maintenance items, or paper jam or service call occurrences. Before initializing or replacing the backup RAM, output a list of the current settings of the maintenance items to reenter the settings after initialization or replacement. **Method** 1. Press the start key. 2. Select the item to be output using the cursor up/down keys.

Display	Output list
Maintenance	List of the current settings of the maintenance modes
User Status	Outputs the user status page
Service Status	Outputs the service status page
Event	Outputs the event log
Network Status	Outputs the network status page
All	Outputs the all reports

3. Press the start key. A list is output.
4. Press the start key. The interrupt print mode is entered and a list is output.
   When A4/Letter paper is available, a report of this size is output. If not, specify the paper feed location.
   The output status is displayed.

Display	Description
---	List of the current settings of the maintenance modes
Active	Outputs the user status page
OK	Outputs the service status page
Error	Outputs the event log

Item No.	Description
U000	**Method: Send to the USB memory** 1. Press the power key on the operation panel, and after verifying the main power indicator has gone off, switch off the main power switch. 2. Insert USB memory in USB memory slot. 3. Turn the main power switch on. 4. Enter the maintenance item. 5. Press the start key. 6. Select the item to be send. 7. Select [Text] or [HTML]. **Display** / **Output list** Print — Outputs the report USB (Text) — Sends output data to the USB memory (text type) USB (HTML) — Sends output data to the USB memory (HTML type) 8. Press the start key. Output will be sent to the USB memory. **Completion** Press the stop key. The screen for selecting a maintenance item No. is displayed.

Item No.	Description
U000	**Event log**

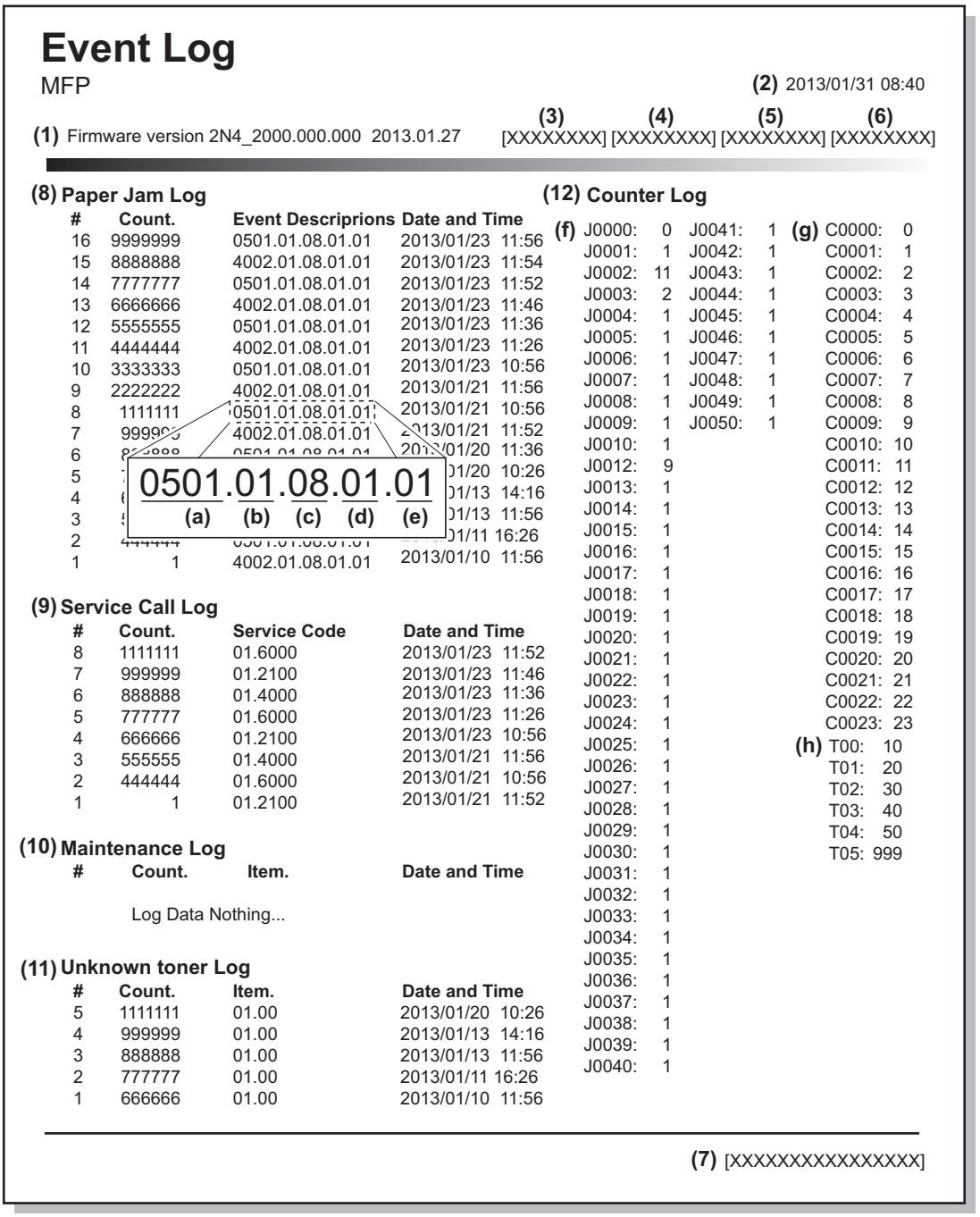

Event Log

MFP

(2) 2013/01/31 08:40

(1) Firmware version 2N4_2000.000.000 2013.01.27

(3) [XXXXXXXX] (4) [XXXXXXXX] (5) [XXXXXXXX] (6) [XXXXXXXX]

(8) Paper Jam Log

#	Count.	Event Descriprions	Date and Time
16	9999999	0501.01.08.01.01	2013/01/23 11:56
15	8888888	4002.01.08.01.01	2013/01/23 11:54
14	7777777	0501.01.08.01.01	2013/01/23 11:52
13	6666666	4002.01.08.01.01	2013/01/23 11:46
12	5555555	0501.01.08.01.01	2013/01/23 11:36
11	4444444	4002.01.08.01.01	2013/01/23 11:26
10	3333333	0501.01.08.01.01	2013/01/23 10:56
9	2222222	4002.01.08.01.01	2013/01/21 11:56
8	1111111	0501.01.08.01.01	2013/01/21 10:56
7	999999	4002.01.08.01.01	2013/01/21 11:52
6	[illegible]	[illegible]	[illegible]/01/20 11:36
5	[illegible]	[illegible]	[illegible]01/20 10:26
4	[illegible]	[illegible]	[illegible]01/13 14:16
3	[illegible]	[illegible]	[illegible]01/13 11:56
2	444444	[illegible]	[illegible]01/11 16:26
1	1	4002.01.08.01.01	2013/01/10 11:56

0501.01.08.01.01
(a) (b) (c) (d) (e)

(9) Service Call Log

#	Count.	Service Code	Date and Time
8	1111111	01.6000	2013/01/23 11:52
7	999999	01.2100	2013/01/23 11:46
6	888888	01.4000	2013/01/23 11:36
5	777777	01.6000	2013/01/23 11:26
4	666666	01.2100	2013/01/23 10:56
3	555555	01.4000	2013/01/21 11:56
2	444444	01.6000	2013/01/21 10:56
1	1	01.2100	2013/01/21 11:52

(10) Maintenance Log

#	Count.	Item.	Date and Time

Log Data Nothing...

(11) Unknown toner Log

#	Count.	Item.	Date and Time
5	1111111	01.00	2013/01/20 10:26
4	999999	01.00	2013/01/13 14:16
3	888888	01.00	2013/01/13 11:56
2	777777	01.00	2013/01/11 16:26
1	666666	01.00	2013/01/10 11:56

(12) Counter Log

(f)

J0000:	0	J0041:	1
J0001:	1	J0042:	1
J0002:	11	J0043:	1
J0003:	2	J0044:	1
J0004:	1	J0045:	1
J0005:	1	J0046:	1
J0006:	1	J0047:	1
J0007:	1	J0048:	1
J0008:	1	J0049:	1
J0009:	1	J0050:	1
J0010:	1		
J0012:	9		
J0013:	1		
J0014:	1		
J0015:	1		
J0016:	1		
J0017:	1		
J0018:	1		
J0019:	1		
J0020:	1		
J0021:	1		
J0022:	1		
J0023:	1		
J0024:	1		
J0025:	1		
J0026:	1		
J0027:	1		
J0028:	1		
J0029:	1		
J0030:	1		
J0031:	1		
J0032:	1		
J0033:	1		
J0034:	1		
J0035:	1		
J0036:	1		
J0037:	1		
J0038:	1		
J0039:	1		
J0040:	1		

(g)

C0000:	0
C0001:	1
C0002:	2
C0003:	3
C0004:	4
C0005:	5
C0006:	6
C0007:	7
C0008:	8
C0009:	9
C0010:	10
C0011:	11
C0012:	12
C0013:	13
C0014:	14
C0015:	15
C0016:	16
C0017:	17
C0018:	18
C0019:	19
C0020:	20
C0021:	21
C0022:	22
C0023:	23

(h)

T00:	10
T01:	20
T02:	30
T03:	40
T04:	50
T05:	999

(7) [XXXXXXXXXXXXXXXX]

Figure 1-3-1

Detail of event log

No.	Items	Description
(1)	System version	
(2)	System date	
(3)	Engine soft version	
(4)	Engine boot version	

Item No.	Description
U000	**Detail of event log**

No.	Items	Description		
(5)	Controller BROM version			
(6)	Operation panel mask version			
(7)	Machine serial number			
(8)	Paper Jam Log	#	Count.	Event Descriptions
		Remembers 1 to 16 of occurrence. If the occurrence of the previous paper jam is less than 16, all of the paper jams are logged. When the occurrence excesseds 16, the oldest occurrence is removed.	The total page count at the time of the paper jam.	Log code (hexadecimal, 5 categories) (a) Cause of a paper jam (b) Paper source (c) Paper size (d) Paper type (e) Paper eject
		(a) Cause of paper jam (Hexadecimal)		
		For details on the case of paper jam, refer to Paper Misfeed Detection. (P.1-4-1)		
		(b) Detail of paper source (Hexadecimal)		
		00: MP tray 01: Cassette 1 02: Cassette 2 03: Cassette 3 (paper feeder/large capacity feeder) 04: Cassette 4 (paper feeder/large capacity feeder) 05: Cassette 5 (side multi tray/side deck) 06: Cassette 6 (side paper feeder/side large capacity feeder) 07: Cassette 7 (side paper feeder/side large capacity feeder) 08 to 09: Reserved		
		(c) Detail of paper size (Hexadecimal)		
		00: (Not specified) 01: Monarch 02: Business 03: International DL 04: International C5 05: Executive 06: Letter-R 86: Letter-E 07: Legal 08: A4R 88: A4E 09: B5R 89: B5E 0A: A3	0B: B4 0C: Ledger 0D: A5R 0E: A6 0F: B6 10: Commercial #9 11: Commercial #6 12: ISO B5 13: Custom size 1E: C4 1F: Postcard 20: Reply-paid post-card 21: Oficio II	22: Special 1 23: Special 2 24: A3 wide 25: Ledger wide 26: Full bleed paper (12 x 8) 27: 8K 28: 16K-R A8: 16K-E 32: Statement-R B2: Statement-E 33: Folio 34: Western type 2 35: Western type 4

Item No.	Description
U000	

No.	Items	Description		
(8) cont.	Paper Jam Log	(d) Detail of paper type (Hexadecimal)		
		01: Plain 02: Transparency 03: Preprinted 04: Labels 05: Bond 06: Recycled 07: Vellum 08: Rough 09: Letterhead	0A: Color 0B: Prepunched 0C: Envelope 0D: Cardstock 0E: Coated 0F: 2nd side 10: Media 16 11: High quality	15: Custom 1 16: Custom 2 17: Custom 3 18: Custom 4 19: Custom 5 1A: Custom 6 1B: Custom 7 1C: Custom 8
		(e) Detail of paper eject location (Hexadecimal)		
		01: Face down (FD) 02: Face up (FU)/1000-sheet finisher face up (FU)/ 4000-sheet finisher left sub tray (FU) 03: 1000-sheet finisher face down (FD) 4000-sheet finisher main tray (FD) 05: Job separator tray 06: 4000-sheet finisher right sub tray (FU) 07: 4000-sheet finisher left sub tray (FD) 09: 4000-sheet finisher right sub tray (FD) 0A: Center-folding unit tray 0B: Mailbox tray 1 (FD) 0C: Mailbox tray 1 (FU) 0F: 100-sheets Inner Job separator tray (FD) 15: Mailbox tray 2 (FD) 16: Mailbox tray 2 (FU) 1F: Mailbox tray 3 (FD) 20: Mailbox tray 3 (FU) 29: Mailbox tray 4 (FD) 2A: Mailbox tray 4 (FU) 33: Mailbox tray 5 (FD) 34: Mailbox tray 5 (FU) 3D: Mailbox tray 6 (FD) 3E: Mailbox tray 6 (FU) 47: Mailbox tray 7 (FD) 48: Mailbox tray 7 (FU) 04/0D/0E: Reserved		
		Date and Time		
		Date and time of the occurrence of paper jam.		

Item No.	Description
U000	

No.	Items	Description		
(9)	Service Call Log	#	Count.	Service Code
		Remembers 1 to 8 of occurrence of self diagnostics error. If the occurrence of the previous diagnostics error is less than 8, all of the diagnostics errors are logged.	The total page count at the time of the self diagnostics error.	Self diagnostic error code (See page 1-4-62) 0X:YYYY Where 0X is: 01: Service Call/ System error has occurred 02: after Service Call has occurred, power is turned on and off, and disconnection has been executed YYYY is a self-diagnostics error code Example: 01.6000
		Date and Time		
		Date and time of occurrence of self-diagnostic error.		
(10)	Maintenance Log	#	Count.	Item
		Remembers 1 to 8 of occurrence of replacement. If the occurrence of the previous replacement of toner container is less than 8, all of the occurrences of replacement are logged.	The total page count at the time of the replacement of the toner container. * :The toner replacement log is triggered by toner empty. This record may contain such a reference as the toner container is inserted twice or a used toner container is inserted.	Code of maintenance replacing item (1 byte, 2 categories) First byte (Replacing item) 01: Toner container Second byte (Type of replacing item) 00: Black 01: Cyan 02: Magenta 03: Yellow First byte (Replacing item) 02: Maintenance kit Second byte (Type of replacing item) 01: MK-XXXX 02: MK-YYYY 03: MK-ZZZZ
		Date and Time		
		Date and time of replacement of the maintenance items.		

Item No.	Description
U000	

No.	Items	Description		
(11)	Unknown Toner Log	#	Count.	Item
		Remembers 1 to 5 of occurrence of unknown toner detection. If the occurrence of the previous unknown toner detection is less than 5, all of the unknown toner detection are logged.	The total page count at the time of the toner empty error with using an unknown toner container.	Unknown toner log code (1 byte, 2 categories) First byte 01: Toner container (Fixed) Second byte 00: Black 01: Cyan 02: Magenta 03: Yellow
		Date and Time		
		Date and time of occurrence of toner container replacement request display.		
(12)	Counter Log Comprised of three log counters including paper jams, self diagnostics errors, and replacement of the toner container.	(f) Paper jam	(g) Self diagnostic error	(h) Maintenance item replacing
		Indicates the log counter of paper jams depending on location. Refer to Paper Jam Log. All instances including those are not occurred are displayed.	Indicates the log counter of self diagnostics errors depending on cause. Example: C6000: 4 Self diagnostics error 6000 has happened four times.	Indicates the log counter depending on the maintenance item for maintenance. T: Toner container 00: Black 01: Cyan 02: Magenta 03: Yellow M: Maintenance kit 00: MK-XXXX 01: MK-YYYY 02: MK-ZZZZ Example: T00: 1 The toner container has been replaced once. * :The toner replacement log is triggered by toner empty. This record may contain such a reference as the toner container is inserted twice or a used toner container is inserted.

Item No.	Description
U000	Service status page (1)

Service Status Page

MFP

(2) 2012/10/27 12:00

(1) Firmware version 2N4_2000.000.000 2012.10.27

(3) [XXXXXXXX] **(4)** [XXXXXXXX] **(5)** [XXXXXXXX]

Controller Information

Memory status

(7) Total Size 3.5 GB

Time

(8) Local Time Zone +01:00 Amsterdam
(9) Date and Time 27/10/2010 12:00
(10) Time Server 10.183.53.13

Installed Options

(11)	Document Processor	Installed
(12)	Paper feeder	Cassette (500 x 2)
(13)	Side Feeder	Cassette (3000)
(14)	Finisher	1000-Finisher
(15)	Job Separator	Installed
(16)	Document Guaed (A)	Installed
(17)	Card Authentication Kit (B)	Installed
(18)	Internet FAX Kit (A)	Installed
	Security Kit (E)	Installed
(19)	Data Security Kit (E) Software Type I	
(95)	UG-33	Installed
(20)	UG-34	Installed
(21)	USB Keyboard	Connected
(22)	USB Keyboard Type	US-English
(96)	Scan extention kit(A)	Installed

Print Coverage

(23) Average(%) / Usage Page(A4/Letter Conversion)
(24) Total
K: 1.10 / 1111111.11
C: 2.20 / 2222222.22
M: 3.30 / 3333333.33
Y: 4.40 / 4444444.44
(25) Copy
K: 1.10 / 1111111.11
C: 2.20 / 2222222.22
M: 3.30 / 3333333.33
Y: 4.40 / 4444444.44
(26) Printer
K: 1.10 / 1111111.11
C: 2.20 / 2222222.22
M: 3.30 / 3333333.33
Y: 4.40 / 4444444.44
(27) FAX
(28) K: 1.10 / 1111111.11
Period (27/10/2010 - 03/11/2010 08:40)
(29) Last Page K/C/M/Y(%) 1.00 / 2.22 / 3.33 / 4.44

(30) FAX Information Slot1/Slot2
(31) Rings (Normal) 3
(32) Rings (FAX/TEL) 3
(33) Rings (TAD) 3
(34) Option DIMM Size 16 MB

(35) FRPO Status

User Top Margin	A1+A2/100	0.00
User Left Margin	A3+A4/100	0.00
.		
.		
.		
e-MPS error control	Y6	0

RP Code
(36) <u>1234 5678 9012</u>
(37) 5678 9012 3456
(38) 9012 3456 7890
(39) 3456 7890 1234

1 **(6)** [XXXXXXXXXXXXXXXX]

Figure 1-3-2

Item No.	Description
U000	**Service status page (2)**

Service Status Page

MFP 2012/10/27 12:00

Firmware version 2N4_2000.000.000 2012.10.27 [XXXXXXXX] [XXXXXXXX] [XXXXXXXX]

Engine Information

(40)	NVRAM Version	_1F31225_1F31225
(41)	Scanner Version	2N4_1200.001.089
(42)	FAX Slot1	
	FAX BOOT Version	5JT_5000.001.001
	FAX APL Version	5JT_5100.001.001
	FAX IPL Version	5JT_5200.001.001
(43)	MAC Address	00:C0:EE:D0:01:0D

Send Information

(44)	Date and Time	10/10/27
(45)	Address	

1/2 **(46) (47)**
(48) 100/100
(49) 0/0/0/0
(50) 0000000/0000000/0000000/0000000/0000000/0000000/0000000/0000000/0000000/0000000/
0000000/0000000/0000000/0000000/0000000/0000000/0000000/0000000/0000000/0000000/0000000/0000000/
F00/U00/0/0/0/0/30/30/70/70/abcde/1/0/1/ **(51) (52) (53) (54) (55) (56) (57) (58) (59) (60) (61) (62) (63) (64)**
(65) 0000/0000/0000/0000/0000/0000/0000/0000/0000/0000/0000/0000/0000/0000/
0000/0000/0000/0000/0000/0000/0000/0000/0000/0000/
(66) 0000/0100/0500/1000/0000/0100/0500/1000/0000/0100/0500/1000/0000/0100/0500/1000/
0000/0100/0500/1000/0000/0100/0500/1000/0000/0100/0500/1000/0000/0100/0500/1000/
0000000000000000000000000000000/0000000000000000000000000000000000000000000000000/ **(67) (68) (69)**
(70) 0000000000000000/0000000000000000/0000000000000000/0000000000000000/0000000000000000/0000000000000000/0000000000000/
0000000000000000/0000000000000000/0000000000000000/0000000000000000/0000000000000000/0000000000000000/0000000000000/
0000000000000000/0000000000000000/0000000000000000/0000000000000000/0000000000000000/0000000000000000/0000000000000/
0000000000000000/0000000000000000/0000000000000000/0000000000000000/0000000000000000/0000000000000000/0000000000000/
(71) 0000000000000000/0000000000000000/0000000000000000/0000000000000000/0000000000000000/0000000000000000/0000000000000/
0000000000000000/0000000000000000/0000000000000000/0000000000000000/0000000000000000/0000000000000000/0000000000000/
0000000000000000/0000000000000000/0000000000000000/0000000000000000/0000000000000000/0000000000000000/0000000000000/
0000000000000000/0000000000000000/0000000000000000/0000000000000000/0000000000000000/0000000000000000/0000000000000/
(72) 0000000000000000/0000000000000000/0000000000000000/0000000000000000/0000000000000000/0000000000000000/0000000000000/
0000000000000000/0000000000000000/0000000000000000/0000000000000000/0000000000000000/0000000000000000/0000000000000/
(73) 0000000000000000/0000000000000000/0000000000000000/0000000000000000/0000000000000000/0000000000000000/0000000000000/
0000000000000000/0000000000000000/0000000000000000/0000000000000000/0000000000000000/0000000000000000/0000000000000/
0000000000000000/0000000000000000/0000000000000000/0000000000000000/0000000000000000/0000000000000000/0000000000000/
0000000000000000/0000000000000000/0000000000000000/0000000000000000/0000000000000000/0000000000000000/0000000000000/
(74) 0000000000000000/0000000000000000/0000000000000000/0000000000000000/0000000000000000/0000000000000000/0000000000000/
0000000000000000/0000000000000000/0000000000000000/0000000000000000/0000000000000000/0000000000000000/0000000000000/
0000000000000000/0000000000000000/0000000000000000/0000000000000000/0000000000000000/0000000000000000/0000000000000/
0000000000000000/0000000000000000/0000000000000000/0000000000000000/0000000000000000/0000000000000000/0000000000000/
(75) 0000000000000000/0000000000000000/0000000000000000/0000000000000000/0000000000000000/0000000000000000/0000000000000/
(76) 12345678/11223344/00001234abcd567800001234abcd5678/0123456789012345678901234567890 1/0008/00/07
12345678/11223344/00001234abcd567800001234abcd5678/0123456789012345678901234567890 1/0008/00/07
12345678/11223344/00001234abcd567800001234abcd5678/0123456789012345678901234567890 1/0008/00/07
12345678/11223344/00001234abcd567800001234abcd5678/0123456789012345678901234567890 1/0008/00/07
(77) XXXXXXXX
[ABCDEFGHIJ][ABCDEFGHIJ] **(78) (79)**
[ABCDEFGHIJ][ABCDEFGHIJ] **(80) (81)**
(82) 00070107FE/0700FE00FE/00FE000100/0000000000/0000000000/0000000000/00000A010A/0A0A0A3200/0000000000/0000000000/
0008000000/080000001D/0096009B00/9B009BFFFB/0082000000/000000001F/0000002C00/0000000000/0000000000/0000000000/
0000000000/0000000000/0000000000/0000000000/00
0/3/ **(83) (84)**
0/12.3/56.7/ **(85) (86) (87)**
1/1/1/0/1/0 2010/12/15 12:34:56 **(88)**
1/5/ **(89)(90)**
1/1/ **(91)(92)**
0/ **(93)**
ABCDEFGHIJKL/ABCDEFGHIJKL/ABCDEFGHIJKL/ABCDEFGHIJKL/ **(94)**

2 [XXXXXXXXXXXXXXXX]

Figure 1-3-3

Item No.	Description
U000	**Detail of service status page**

No.	Description	Supplement
(1)	Firmware version	-
(2)	System date	-
(3)	Engine soft version	-
(4)	Engine boot version	-
(5)	Operation panel mask version	-
(6)	Machine serial number	-
(7)	Total memory size	-
(8)	Local time zone	-
(9)	Report output date	Day/Month/Year hour:minute
(10)	NTP server name	-
(11)	Presence or absence of the document processor	Installed/Not installed
(12)	Presence or absence of the paper feeder	Paper feeder/Large capacity feeder/Not Installed
(13)	Presence or absence of the side feeder	Side deck/Side multi tray/Side paper feeder/ Side large capacity feeder/Not Installed
(14)	Presence or absence of the finisher	1000-sheet finisher/4000-sheet finisher/ Not Installed
(15)	Presence or absence of the job separator	Installed/Not Installed
(16)	Presence or absence of the printed document guard kit	Installed/Not Installed
(17)	Presence or absence of the IC card authentication kit	Installed/Not Installed/Trial
(18)	Presence or absence of the internet fax kit	Installed/Not Installed
(19)	Presence or absence of the data security kit	Installed/Not Installed
(20)	Presence or absence of the UG-34	Installed/Not Installed
(21)	Presence or absence of the USB keyboard	Connected/Not connected
(22)	USB keyboard setting display	US-English/US-English with Euro/German/French
(23)	Page of relation to the A4/Letter	* :Print Coverage provides a close-matching reference of toner consumption and will not match with the actual toner consumption.
(24)	Average coverage for total	Black/Cyan/Magenta/Yellow
(25)	Average coverage for copy	Black/Cyan/Magenta/Yellow

Item No.	Description
U000	

No.	Description	Supplement
(26)	Average coverage for printer	Black/Cyan/Magenta/Yellow
(27)	Average coverage for fax	Black/Cyan/Magenta/Yellow
(28)	Cleared date and output date	-
(29)	Coverage on the final output page	-
(30)	Fax kit information	This item is printed only when the fax kit is installed.
(31)	Number of rings	0 to 15
(32)	Number of rings before automatic switching	0 to 15
(33)	Number of rings before connecting to answering machine	0 to 15
(34)	Optional DIMM size	-
(35)	FRPO setting	-
(36)	RP code	Code the engine software version and the date of update.
(37)	RP code	Code the main software version and the date of update.
(38)	RP code	Code the engine software version and the date of the previous update.
(39)	RP code	Code the main software version and the date of the previous update.
(40)	NV RAM version	_ 1F3 1225 _ 1F3 1225 (a) (b) (c) (d) (e) (f) (a) Consistency of the present software version and the database _ (underscore): OK * (Asterisk): NG (b) Database version (c) The oldest time stamp of database version (d) Consistency of the present software version and the ME firmware version _ (underscore): OK * (Asterisk): NG (e) ME firmware version (f) The oldest time stamp of the ME database version Normal if (a) and (d) are underscored, and (b) and (e) are identical with (c) and (f).
(41)	Scanner firmware version	-

Item No.	Description
U000	

No.	Description	Supplement
(42)	Fax firmware version	This item is printed only when the fax kit is installed.
(43)	Mac address	-
(44)	The last sent date and time	-
(45)	Transmission address	-
(46)	Destination information	-
(47)	Area information	-
(48)	Margin settings	Top margin/Left margin
(49)	L settings	L Top margin integer part/ L Top margin decimal part/ L Left margin integer part/ L Left margin decimal part/
(50)	Life counter (The first line)	Machine life/MP tray/Cassette 1/Cassette 2/ Cassette 3/Cassette 4/Cassette 5/Cassette 6/ Cassette 7/Duplex
	Life counter (The second line)	Drum unit K/Drum unit C/Drum unit M/Drum unit Y/ Transfer belt unit/Developer unit K/ Developer unit C/Developer unit M/ Developer unit Y/Maintenance kit A/ Maintenance kit B/Maintenance kit C
(51)	Panel lock information	0: Off 1: Partial lock 2: Full lock
(52)	USB information	U00: Not installed/U01: Full speed/U02: Hi speed
(53)	Paper handling information	0: Paper source unit select/1: Paper source unit
(54)	Color printing double count mode	0: All single counts 1: A3, Single count, Less than 420 mm (length) 2: Legal, Single count, 356 mm or less (length) 3: Folio, Single count, Less than 330 mm (length)
(55)	Black and white printing double count mode	0: All single counts 1: A3, Single count, Less than 420 mm (length) 2: Legal, Single count, 356 mm or less (length) 3: Folio, Single count, Less than 330 mm (length)
(56)	Billing counting timing	-
(57)	Temperature (machine inside)	-
(58)	Temperature (machine outside)	-
(59)	Relative humidity (machine outside)	-
(60)	Humidity (machine inside)	-
(61)	Fixed assets number	-
(62)	Job end judgment time-out time	-

Item No.	Description
U000	

No.	Description	Supplement
(63)	Job end detection mode	-
(64)	Prescribe environment reset	0: Off 1: On
(65)	Media type attributes 1 to 28 (Not used: 18, 19, 20) * : For details on settings, refer to MDAT Command in “Prescribe Commands Reference Manual.	Weight settings 0: Light 1: Normal 1 2: Normal 2 3: Normal 3 4: Heavy 1 5: Heavy 2 6: Heavy 3 7: Extra Heavy Fuser settings 0: High 1: Middle 2: Low 3: Vellum Duplex settings 0: Disable 1: Enable
(66)	Calibration information	Black/Cyan/Magenta/Yellow
(67)	Calibration information	-
(68)	Calibration information	-
(69)	Calibration information	-
(70)	Calibration information	-
(71)	Calibration information	-
(72)	Calibration information	-
(73)	Calibration information	-
(74)	Calibration information	-
(75)	Calibration information	-
(76)	RFID information	-
(77)	RFID reader/writer version information	-
(78)	Color table version for printer	-
(79)	Color table 2 version for printer	-
(80)	Color table version for copy	-
(81)	Color table 2 version for copy	-
(82)	Maintenance information	-
(83)	Altitude	0: Standard 1: High altitude 1 2: High altitude 2
(84)	Charger roller correction	1 to 5
(85)	Configuring toner coverage counters	0: Full-color count display 1: Color coverage count display
(86)	Low coverage setting	0.1 to 100.0
(87)	Middle coverage setting	0.1 to 100.0

Item No.	Description
U000	

No.	Description	Supplement
(88)	Data Sanitization information	-
(89)	Toner low setting	0: Enabled 1: Disabled
(90)	Toner low detection level	0 to 100 (%)
(91)	Limiting shifting for one-page document	0: Invalid (No shift limit) 1: Valid (Shift limit)
(92)	Setting confirmation display for banner printing	0: Not shown 1: Shown on every page
(93)	Full-page print mode	0: Normal mode (Fixed)
(94)	Drum serial number	Black/Cyan/Magenta/Yellow
(95)	Presence or absence of the UG-33	Installed/Not Installed
(96)	Presence or absence of the Scan extension kit(A)	Installed/Not Installed

Code conversion

A	B	C	D	E	F	G	H	I	J
0	1	2	3	4	5	6	7	8	9

U001

Exiting the maintenance mode

Description
Exits the maintenance mode and return to the normal copy mode.
Purpose
To exit the maintenance mode.

Method
1. Press the start key. The normal copy mode is entered.

Item No.	Description
U002	**Setting the factory default data** **Description** Restores the machine conditions to the factory default settings. **Purpose** To move the mirror frame of the scanner to the position for transport. * : The parameter settings within the system menu will also be reset to the factory-set values. **Method** 1. Press the start key. 2. Select [Mode1(All)]. 3. Press the start key. The mirror frame of the scanner return to the home position. 4. Turn the main power switch off and on. Allow more than 5 seconds between Off and On. * : An error code is displayed in case of an initialization error. When errors occurred, turn main power switch off then on, and execute initialization using maintenance item U002. * : Reset the following setting by using the system menu. [FAX] - Transmission - Local FAX Name Entry **Error codes** Codes: 0001 — Entity error 0002 — Controller error 0003 — OS error 0020 — Engine error 0040 — Scanner error
U003	**Setting the service telephone number** **Description** Sets the telephone number to be displayed when a service call code is detected. **Purpose** To set the telephone number to call service when installing the machine. **Setting** 1. Press the start key. The keys to enter the number are displayed on the touch panel. 2. Enter a telephone number (up to 15 digits). 3. Press the start key. The setting is set. **Completion** Press the stop key. The screen for selecting a maintenance item No. is displayed.

Item No.	Description
U004	**Setting the machine number** **Description** Sets or displays the machine number. **Purpose** Performed to assign or confirm the machine ID when the EEPROM on the main PWB has been replaced. **Method** 1. Press the start key. If the machine serial number of engine PWB matches with that of main PWB **Display** / **Description** Machine No. / Displays the machine serial number If the machine serial number of engine PWB does not match with that of main PWB **Display** / **Description** Machine No.(Main) / Displays the machine serial number of main Machine No.(Eng) / Displays the machine serial number of engine **Setting** Carry out if the machine serial number does not match. 1. Select [Execute]. 2. Press the start key. Writing of serial No. starts. 3. Turn the main power switch off and on. Allow more than 5 seconds between Off and On. **Completion** Press the stop key. The screen for selecting a maintenance item No. is displayed.

<table>
<tr><th>Item No.</th><th>Description</th></tr>
<tr><td>U010</td><td>

Setting the maintenance mode ID

Description
Sets the maintenance mode ID.
Purpose
Modify maintenance mode ID for more security.

Method
1. Press the start key.

<table>
<tr><th>Display</th><th>Description</th></tr>
<tr><td>New ID</td><td>Enter a new 8-digit ID</td></tr>
<tr><td>New ID(Reconfirm)</td><td>Enter a new 8-digit ID (to confirm)</td></tr>
<tr><td>Initialize</td><td>Initialize the ID</td></tr>
</table>

Setting
1. Select [New ID].
2. Enter a new 8-digit ID on ten keys (0 – 9, *, #). * and # are mandatory to contain.
3. Select [New ID(Reconfirm)].
4. Enter a new 8-digit ID on ten keys (0 – 9, *, #).
5. Press the start key. The setting is set.

Method: [Initialize]
1. Select [Initialize].
2. Press the start key. ID is initialized.

Completion
Press the stop key. The screen for selecting a maintenance item No. is displayed.

</td></tr>
<tr><td>U018</td><td>

Check Firmware Checksum

Description
Investigate that the firmware has not been modified.
Purpose
Investigate that the firmware has not been modified by re-calculate the checksum.

Method
1. Press the start key.

<table>
<tr><th>Display</th><th>Description</th></tr>
<tr><td>EXpected</td><td>Displays the expected checksum.</td></tr>
<tr><td>Result</td><td>Displays the calculated checksum.</td></tr>
<tr><td>Execute</td><td>Perform the self-investigation.</td></tr>
</table>

2. Select [Execute].
3. Press the start key.
   Displays the checksum in [Expected] after execution.

</td></tr>
</table>

Item No.	Description
U018	**If the verified result was incorrect, the following are displayed.** **Completion** Press the stop key. The screen for selecting a maintenance item No. is displayed.

Display	Description
f001	An expected-value file does not exist.
f002	Reading the expected-value file failed.
f003	Illegal data in the expected-value file (not 64-byte data)
s001t	Failure to read the checksum
NG	The expected value and the checksum do not match.

U019

Firmware Version

Description
Displays the part number of the firmware version to each PWB.
Purpose
To check the part number or to decide, if the newest version of firmware is installed.

Method
1. Press the start key. The firmware version are displayed.
2. Change the screen using the cursor up/down keys.

Display	Description
Main	Main firmware
MMI	Main operation firmware
Panel Main	Operation firmware
Panel Boot	Operation booting
Browser	Browser firmware
Engine	Engine firmware
Engine Boot	Engine booting
Scanner	Scanner firmware
Scanner Boot	Scanner booting
RFID	RFID firmware
IH CPU	IH CPU firmware
IH CPU Boot	IH CPU booting
Motor CPU	Motor CPU firmware
Motor CPU Boot	Motor CPU booting
Dictionary	Dictionary software
Option Language	Optional language software
OCR	OCR software

Item No.	Description
U019	

Display	Description
Color Table1(Copy)*	Color table 1 (copy) software
Color Table2(Copy)*	Color table 2 (copy) software
Color Table1(Prn)*	Color table 1 (printer) software
Color Table2(Prn)*	Color table 2 (printer) software
DP	Document processor firmware
DP Boot	Document processor booting
DP SSW	DP multi feed sensor
PF1	Paper feeder / Large capacity feeder firmware
PF1 Boot	Paper feeder / Large capacity feeder booting
Side PF	Side multi tray /Side deck firmware
Side PF Boot	Side multi tray /Side deck booting
SMT SSW	Side multi tray multi feed sensor
PF2	Side paper feeder / Side large capacity feeder firmware
PF2 Boot	Side paper feeder / Side large capacity feeder booting
DF	1000-sheet finisher / 4000-sheet finisher firmware
DF Boot	1000-sheet finisher / 4000-sheet finisher booting
PH	Punch unit firmware
PH Boot	Punch unit booting
MT	Mailbox firmware
MT Boot	Mailbox booting
BF	Center-folding unit firmware
BF Boot	Center-folding unit booting
Fax APL1	Fax APL 1
Fax Boot1	Fax booting 1
Fax IPL1	Fax IPL 1
Fax APL2	Fax APL 2 (dual Fax)
Fax Boot2	Fax booting 2 (dual Fax)
Fax IPL2	Fax IPL 2 (dual Fax)
Application Name 01-16	Application software

***:** Selected by U485.

Completion
Press the stop key. The screen for selecting a maintenance item No. is displayed.

Item No.	Description
U021	**Memory initializing** **Description** Initializes all settings, except those pertinent to the type of machine, namely each counter setting, service call history and mode setting. Also initializes backup RAM according to region specification selected in maintenance item U252 Setting the destination. **Purpose** To return the machine settings to their factory default. **Method** 1. Press the start key. 2. Select [Execute]. 3. Press the start key. All data other than that for adjustments due to variations between machines is initialized based on the destination setting. 4. Turn the main power switch off and on. Allow more than 5 seconds between Off and On. * : An error code is displayed in case of an initialization error. When errors occurred, turn main power switch off then on, and execute initialization using maintenance item U021. **Error codes** 0001 Entity error 0002 Controller error 0020 Engine error 0040 Scanner error

Item No.	Description
U024	**HDD formatting** **Description** Initializes the hard disk. **Purpose** To initialize the hard disk when replacing the hard disk after shipping. **Caution** In addition, the following settings are also initialized by initializing the hard disk. System menu (user login administration, job accounting, address book, one-touch keys and document box etc.), shortcuts and panel programs When fully formatted, the following pre-installed software are removed. Option language, OCR dictionary software, HyPAS Application (FMU etc.), Color Table. **Method** 1. Press the start key. 2. Select the item. Display / Description: Format — Execution of HDD format Composition* — Change of HDD configuration *: 45 ppm/55 ppm model only. **Method: [Format]** 1. Select the item. Display / Description: Full — Full format Data — Data format (the application software are retained) 2. Press [Execute]. 3. Press the start key to initialize the hard disk. 4. Turn the main power switch off and on. Allow more than 5 seconds between Off and On. **Method: [Composition]** 1. Select the item. Display / Description: Single — 1-HDD mode Multi — 2-HDD mode * : If the wearing number of the HDD is different, C640 will be displayed. 2. Press the start key. 3. Turn the main power switch off and on. Allow more than 5 seconds between Off and On. * : Software removed must be manually re-installed. Option language, OCR dictionary software: Install using a USB flash device. Install HyPAS applications (such as FMU) on the application dialog. Color Table: Execute U485. * : If an OCT software does not exist, a warning dialog is displayed and OCR is deactivated.

Item No.	Description
U025	**Firmware Update(Security)** **Description** Used to execute FW-Update from the USB flash device while Very High is selected in the Security Level settings under the System Menu. **Purpose** Firmware upgrading is initiated by a service person to conduct U025 while a USB flash device is inserted. **Method** 1. Press the start key. 2. Press [Execute]. 3. Firmware upgrading will begin when power is toggled off and on after the message to urge power toggling is displayed. 4. After the firmware upgrade is completed normally, “FW-UPDATE Completed” will be displayed with the firmware version. * : This is not executable when a USB has not been installed.
U026	**Pulling Backup Data** **Description** Perform restoring of the backup data.. **Purpose** Restores the setting values that was backed up in the flash memory from the HDD. **Method** 1. Press the start key. 2. Press [Execute]. 3. Press the start key. 4. Turn the main power switch off and on. Allow more than 5 seconds between Off and On. * : NG will be displayed when an error was resulted at completion. Saved data: U278 Setting the delivery date U402 Adjusting margins of image printing U952 Maintenance mode workflow

Item No.	Description
U030	**Checking the operation of the motors** **Description** Drives each motor. **Purpose** To check the operation of each motor. **Method** 1. Press the start key. 2. Select the motor to be operated. 3. Press the start key. The operation starts. ***:** 45 ppm/55 ppm model only. 4. To stop operation, press the stop key. **Completion** Press the stop key. The screen for selecting a maintenance item No. is displayed.

Display	Description
Feed	Paper feed motor (PFM) is turned on
DLP(K)	Developer motor K (DEVM-K) is turned on
DLP(CMY)	Developer motor MCY (DEVM-MCY) is turned on
Fuser	Fuser motor (FUM) is turned on
SB(CW)	Eject motor (EM) is turned on clockwise
SB(CCW)	Eject motor (EM) is turned on counterclockwise
CMY Release	Color release motor (CRM) is turned on
Job Separator	JS eject motor (JSEM) is turned on
Regist*	Registration motor (RM) is turned on
Decal	Decal motor (BRDM) is turned on
Decal Guide	Decal Guide motor (BRGM) is turned on
Bridge1	BR conveying motor 1 (BRCM1) is turned on
Bridge2	BR conveying motor 2 (BRCM2) is turned on
Belt Meand	Transfer motor (TRM) is turned on
Press Release	Transfer release motor (TRRM) is turned on
Fuser Release	Fuser release motor (FURM) is turned on
DU1*	Duplex motor 1 (DUM1) is turned on
DU2*	Duplex motor 2 (DUM2) is turned on
Mid Roller*	Middle motor (RM) is turned on

Item No.	Description
U031	**Checking switches and sensors for paper conveying** **Description** Displays the on-off status of each paper detection switch or sensor on the paper path. **Purpose** To check if the switches and sensors for paper conveying operate correctly. **Method** 1. Press the start key. 2. Turn each switch or sensor on and off manually to check the status. When the on-status of a switch or sensor is detected, that switch or sensor is displayed in reverse. **Completion** Press the stop key. The screen for selecting a maintenance item No. is displayed.

Display	Description
MPT Jam	MP feed sensor (MPFS)
Cassette1 Feed	Feed sensor 1 (FS1)
Cassette2 Feed	Feed sensor 2 (FS2)
Feed2(Feed B)	Paper conveying sensor (PCS)
Regist	Registration sensor (RS)
Belt Jam	Loop sensor (LPS)
Exit Feed	Switchback sensor (SBS)
DU1	Duplex sensor 1 (DUS1)
DU2	Duplex sensor 2 (DUS2)
Bridge1 Feed	BR conveying sensor 1 (BRCS1)
Bridge2 Feed	BR conveying sensor 2 (BRCS2)
Bridge Exit	BR eject sensor (BRES)
Exit Paper	Eject full sensor (EFS)
Fuser Feed	Fuser eject sensor (FUES)
Feed1(Mid)	Middle sensor (MS)
Exit Job Separator	JS eject sensor (JSES)

Item No.	Description
U032	**Checking the operation of the clutches** **Description** Turn each clutch on. **Purpose** To check the operation of each clutch. **Method** 1. Press the start key. 2. Select the clutch to be operated. 3. Press the start key. The operation starts. **Display** / **Description** Feed1 — Paper feed clutch 1 (PFCL1) is turned on Feed2 — Paper feed clutch 2 (PFCL2) is turned on Mid Roller*1 — Middle clutch (MCL) is turned on MPT Feed — MP paper feed clutch (MPPFCL) is turned on Regist*1 — Registration clutch (RCL) is turned on Feed — Paper conveying clutch (PCCL) is turned on DU1*1 — Duplex clutch 1 (DUCL1) is turned on DU2*1 — Duplex clutch 2 (DUCL2) is turned on Assist1*2 — Assist clutch 1 (ASCL1) is turned on Assist2*2 — Assist clutch 2 (ASCL2) is turned on Motor — Motor is turned on *1: 30 ppm/35 ppm model only. *2: 45 ppm/55 ppm model only. 4. To stop operation, press the stop key. **Completion** Press the stop key. The screen for selecting a maintenance item No. is displayed.

Item No.	Description
U033	**Checking the operation of the solenoids** **Description** Turn each solenoid on. **Purpose** To check the operation of each solenoid. **Method** 1. Press the start key. 2. Select the solenoid to be operated.z 3. Press the start key. The operation starts. 4. To stop operation, press the stop key. **Completion** Press the stop key. The screen for selecting a maintenance item No. is displayed.

Display	Description
Branch Left	BR Feedshift solenoid (BRFSSOL) is turned on
Branch Exit	Feedshift solenoid (FSSOL) is turned on
Job Separator	JS feedshift solenoid (JSFSSOL) is turned on
ID Clean	Cleaning solenoid (CLSOL) is turned on
Motor	Motor is turned on

Item No.	Description
U034	**Adjusting the print start timing** **Description** Adjusts the leading edge registration or center line. **Purpose** Make the adjustment if there is a regular error between the leading edges of the copy image and original. Make the adjustment if there is a regular error between the center lines of the copy image and original. **Method** 1. Press the start key. 2. Select the item to be adjusted.

Display	Description
LSU Out Top	Leading edge registration adjustment
LSU Out Left	Center line adjustment
LSU Out Top B/W*	Leading edge registration adjustment in black/white mode
LSU Out Top 3/4	Leading edge registration adjustment at 3/4 times of line speed
Mode	Sets the conveying timing verification mode.
Reset	Resets the conveying timing verification data.
On Timing	Verify the conveying timing (sensor on).
Off Timing	Verify the conveying timing (sensor recovery).

*: 55 ppm model only.

Item No.	Description
U034	**Adjustment: Leading edge registration adjustment** 1. Press the system menu key. 2. Press the start key to output a test pattern. 3. Press the system menu key. 4. Select the item to be adjusted. **[LSU Out Top]**

Display	Description	Setting range	Initial setting	Change in value per step
MPT(L)	Paper feed from MP tray	-3.0 to 3.0	0	0.1 mm
MPT Half(L)	Paper feed from MP tray	-3.0 to 3.0	0	0.1 mm
Cassette(L)	Paper feed from cassette	-3.0 to 3.0	0	0.1 mm
Cassette Half(L)	Paper feed from cassette	-3.0 to 3.0	0	0.1 mm
Duplex(L)	Duplex mode (second)	-3.0 to 3.0	0	0.1 mm
Duplex Half(L)	Duplex mode (second)	-3.0 to 3.0	0	0.1 mm
MPT(S)	Paper feed from MP tray	-3.0 to 3.0	0	0.1 mm
MPT Half(S)	Paper feed from MP tray	-3.0 to 3.0	0	0.1 mm
Cassette(S)	Paper feed from cassette	-3.0 to 3.0	0	0.1 mm
Cassette Half(S)	Paper feed from cassette	-3.0 to 3.0	0	0.1 mm
Duplex(S)	Duplex mode (second)	-3.0 to 3.0	0	0.1 mm
Duplex Half(S)	Duplex mode (second)	-3.0 to 3.0	0	0.1 mm

(L): When large size paper is used (218 mm or more in width of paper).
(S): When small size paper is used.

[LSU Out Top B/W] [LSU Out Top 3/4]

Display	Description	Setting range	Initial setting	Change in value per step
MPT(L)	Paper feed from MP tray	-3.0 to 3.0	0	0.1 mm
Cassette(L)	Paper feed from cassette	-3.0 to 3.0	0	0.1 mm
Duplex(L)	Duplex mode (second)	-3.0 to 3.0	0	0.1 mm
MPT(S)	Paper feed from MP tray	-3.0 to 3.0	0	0.1 mm
Cassette(S)	Paper feed from cassette	-3.0 to 3.0	0	0.1 mm
Duplex(S)	Duplex mode (second)	-3.0 to 3.0	0	0.1 mm

(L): When large size paper is used (218 mm or more in width of paper).
(S): When small size paper is used.

Item No.	Description
U034	

5. Change the setting value using the cursor +/- or numeric keys.
   For output example 1, increase the value. For output example 2, decrease the value.

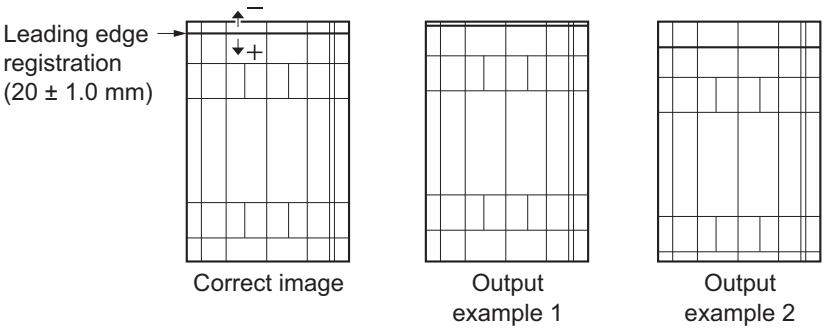

Figure 1-3-4

6. Press the start key. The value is set.

Remark
When changing the setting value of [Large] each item is modified, equal to amount of the value which is changed adds also the value of [Small] each item and is pulled.

Caution
Check the copy image after the adjustment. If the image is still incorrect, perform the following adjustments in maintenance mode for optimizing reading positions.

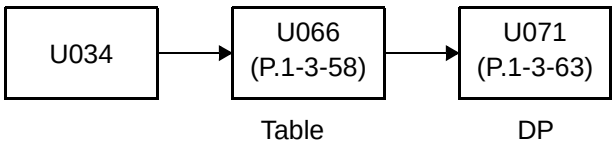

Adjustment: Center line adjustment
1. Press the system menu key.
2. Press the start key to output a test pattern.
3. Press the system menu key.
4. Select the item to be adjusted.
   [LSU Out Left]

Display	Description	Setting range	Initial setting	Change in value per step
MPT	Paper feed from MP tray	-3.0 to 3.0	0	0.1 mm
Cassette1	Paper feed from cassette 1	-3.0 to 3.0	0	0.1 mm
Cassette2	Paper feed from cassette 2	-3.0 to 3.0	0	0.1 mm
Cassette3	Paper feed from optional cassette 3	-3.0 to 3.0	0	0.1 mm
Cassette4	Paper feed from optional cassette 4	-3.0 to 3.0	0	0.1 mm
Cassette5	Paper feed from optional cassette 5	-3.0 to 3.0	0	0.1 mm
Cassette6	Paper feed from optional cassette 6*	-3.0 to 3.0	0	0.1 mm
Cassette7	Paper feed from optional cassette 7*	-3.0 to 3.0	0	0.1 mm
Duplex	Duplex mode (second)	-3.0 to 3.0	0	0.1 mm

*: 45 ppm/55 ppm model only.

Item No.	Description
U034	5. Change the setting value using the +/- keys or numeric keys. For output example 1, increase the value. For output example 2, decrease the value. 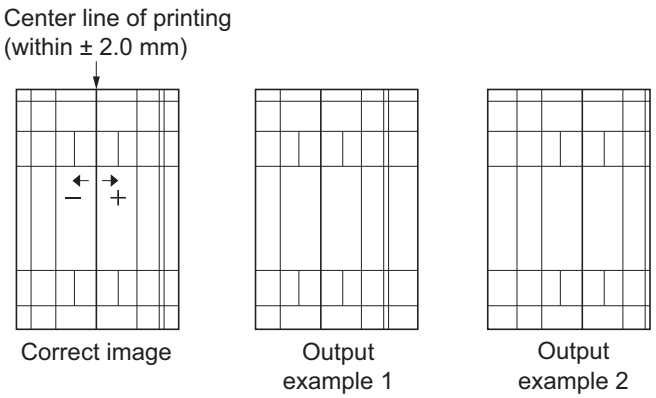 **Figure 1-3-5** 6. Press the start key. The value is set. **Caution** Check the copy image after the adjustment. If the image is still incorrect, perform the following adjustments in maintenance mode for optimizing reading positions. U034 → U067 (P.1-3-59) → U072 (P.1-3-65) Table DP **Setting: [Mode]** 1. Select On or Off. **Display** / **Description** On / Sets the conveying timing verification mode on. Off / Sets the conveying timing verification mode off. 2. Press the start key. **Setting: [Reset]** 1. Select [Execute]. 2. Press the start key. **Setting: [On Timing/ Off Timing]** 1. Select the item. **Display** / **Description** Value(Plain) / Confirms the measured values of Plain. Value(Thick) / Confirms the measured values of Thick. 2. Press the start key. The value is set. **Completion** Press the stop key. The screen for selecting a maintenance item No. is displayed.

Item No.	Description
U035	**Setting the printing area for folio paper** **Description** Changes the printing area for copying on folio paper. **Purpose** To prevent cropped images on the trailing edge or left/right side of copy paper by setting the actual printing area for folio paper. **Setting** 1. Press the start key. 2. Select the item to be set. 3. Change the setting value using the +/- keys. 4. Press the start key. The value is set. **Completion** Press the stop key. The screen for selecting a maintenance item No. is displayed.

Display	Description	Setting range	Initial setting
Length	Length	330 to 356 mm	330
Width	Width	200 to 220 mm	210

Item No.	Description
U037	**Checking the operation of the fan motors**

Description
Drives each fan motor.
Purpose
To check the operation of each fan motor.

Method
1. Press the start key.
2. Select the fan motor to be operated.
3. Press the start key. The operation starts.

Display	Description	Group
Fuser Cooling	Fuser rear fan motor (FURFM) is turned on	B
DLP Rear	Exhaust motor 1and 2 (EXFM1, 2)* is turned on	A
LSU Cooling	LSU fan motor (LSUFM) is turned on	B
Belt Cooling	Belt fan motor 1 (BLFM1) is turned on	A
Exit Cooling	Eject front fan motor (EFFM) is turned on	B
Toner	Toner fan motor 1and 2 (TFM1, 2)* is turned on	A
Low Volt	Power source fan motor (PSFM) is turned on	A
Exit Rear Cooling	Eject rear fan motor (EFRM) is turned on	B
IH PWB	IH fan motor (IHFM) is turned on	A
IH Coil	Fuser front fan motor (FUFFM) is turned on	A
DLP Front	Developer fan motor 1and 2 (DEVFM1, 2) is turned on	A
Conv Edge	Fuser fan motor 1and 2 (FUFM1, 2) is turned on	A
Fuser Edge	Fuser edge fan motor 1and 2 (FUEFM1, 2) is turned on	-
GroupA	Fan motors of group A are turned on	
GroupB	Fan motors of group B are turned on	

* : 45 ppm/55 ppm model only.

4. To stop operation, press the stop key.

Completion
Press the stop key. The screen for selecting a maintenance item No. is displayed.

Item No.	Description
U039	**Adjusting the magnification**

Description
Adjusts the magnification of the printing.
Purpose
Make the adjustment if the magnification in the auxiliary scanning direction is incorrect.

Caution
Adjust the magnification in the following order.

U039 → U065 (P.1-3-56) → U070 (P.1-3-61)

Method
1. Press the start key.
2. Press the system menu key.
3. Press the start key to output a test pattern.
4. Press the system menu key.
5. Select the item to be adjusted.

Display	Description	Setting range	Initial setting	Change in value per step
Sub Scan	Magnification in the auxiliary scanning direction	-1 to 1	0	0.1 %

Adjustment: [Sub Scan]
1. Change the setting value using the +/- keys or numeric keys.
   Increasing the value makes the image longer, while decreasing the value makes the image shorter.

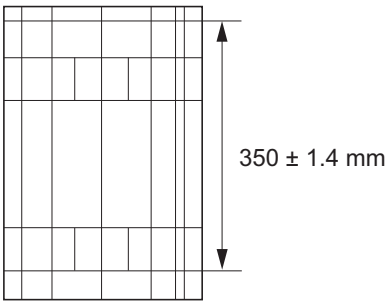

Figure 1-3-6

2. Press the start key. The value is set.

Completion
Press the stop key. The indication for selecting a maintenance item No. appears.

Item No.	Description
U051	**Adjusting the deflection in the paper**

Description
Adjusts the deflection in the paper at the registration roller.
Purpose
Make the adjustment if the leading edge of the copy image is missing or varies randomly, or if the copy paper is Z-folded.

Method
1. Press the start key.
2. Select the item to be adjusted.

Display	Description
Paper Loop Amount	Deflection adjustment
Paper Loop Amount B/W*	Deflection adjustment in black and white mode
Paper Loop Amount 3/4	Deflection adjustment at 3/4 times of line speed

*: 55 ppm model only.

Adjustment
1. Press the system menu key.
2. Place an original and press the start key to make a test copy.
3. Press the system menu key.
4. Select the item to be adjusted.
[Paper Loop Amount]

Display	Description	Setting range	Initial setting			
			30ppm	35ppm	45ppm	55ppm
MPT(L)	Paper feed from MP tray	-30 to 20	1	1	-5	-7
MPT Half(L)	Paper feed from MP tray	-30 to 20	1	1	0	-1
Cassette(L)	Paper feed from cassette	-30 to 20	1	1	-5	-7
Cassette Half(L)	Paper feed from cassette	-30 to 20	1	1	0	-1
Duplex(L)	Duplex mode (second)	-30 to 20	1	1	-5	-7
Duplex Half(L)	Duplex mode (second)	-30 to 20	1	1	0	-1
MPT(S)	Paper feed from MP tray	-30 to 20	1	1	-5	-7
MPT Half(S)	Paper feed from MP tray	-30 to 20	1	1	0	-1
Cassette(S)	Paper feed from cassette	-30 to 20	1	1	-6	-8
Cassette Half(S)	Paper feed from cassette	-30 to 20	1	1	-1	-2
Duplex(S)	Duplex mode (second)	-30 to 20	1	1	-5	-7
Duplex Half(S)	Duplex mode (second)	-30 to 20	1	1	0	-1

Change in value per step: 1.0 mm
(L): When large size paper is used (218 mm or more in width of paper).
(S): When small size paper is used.

Item No.	Description
U051	

[Paper Loop Amount B/W]

Display	Description	Setting range	Initial setting			
			30ppm	35ppm	45ppm	55ppm
MPT(L)	Paper feed from MP tray	-30 to 20	-	-	-	-8
Cassette(L)	Paper feed from cassette	-30 to 20	-	-	-	-8
Duplex(L)	Duplex mode (second)	-30 to 20	-	-	-	-8
MPT(S)	Paper feed from MP tray	-30 to 20	-	-	-	-8
Cassette(S)	Paper feed from cassette	-30 to 20	-	-	-	-8
Duplex(S)	Duplex mode (second)	-30 to 20	-	-	-	-8

Change in value per step: 1.0 mm
(L): When large size paper is used (218 mm or more in width of paper).
(S): When small size paper is used.

[Paper Loop Amount 3/4]

Display	Description	Setting range	Initial setting			
			30ppm	35ppm	45ppm	55ppm
MPT(L)	Paper feed from MP tray	-30 to 20	1	1	-2	-2
Cassette(L)	Paper feed from cassette	-30 to 20	1	1	-2	-2
Duplex(L)	Duplex mode (second)	-30 to 20	1	1	-2	-2
MPT(S)	Paper feed from MP tray	-30 to 20	1	1	-2	-2
Cassette(S)	Paper feed from cassette	-30 to 20	1	1	-3	-3
Duplex(S)	Duplex mode (second)	-30 to 20	1	1	-2	-2

Change in value per step: 1.0 mm
(L): When large size paper is used (218 mm or more in width of paper).
(S): When small size paper is used.

5. Change the setting value using the +/- keys or numeric keys.
   For output example 1, increase the value. For output example 2, decrease the value.
   The greater the value, the larger the deflection; the smaller the value, the smaller the deflection.

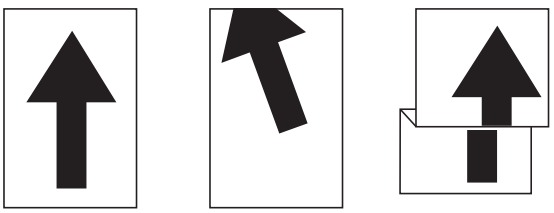

Figure 1-3-7

6. Press the start key. The value is set.

Completion
Press the stop key. The indication for selecting a maintenance item No. appears.

Item No.	Description
U052	**Setting the fuser motor control**

Description
Enters the sensor data values described on the supplied sheet provided when the loop sensor is replaced and Perform correction processing for the fuser motor.
Purpose
To perform when replacing the loop sensor or paper conveying unit.
Method
1. Press the start key.
2. Select the item.

Display	Description
Set Loop Sensor	Enter the data value for loop sensor
Loop Sensor Control	Set the loop sensor detection control
Set Loop Sensor Valid	Sets the presence or absence of the loop sensor
Chk Loop Sensor	Display the data value for loop sensor

Method: [Set Loop Sensor]
1. Select [Scanning Board1].
2. Enter the sensor data of DATA1 on the sheet supplied with the loop sensor by using the [+] and [–] keys.
3. Select [Scanning Board2].
4. Enter the sensor data of DATA2 on the sheet supplied with the loop sensor by using the [+] and [–] keys.
5. Press the start key. The value is set.
   * : When replacing the conveying unit, enter the data specified on the maintenance report.

How to read the sensor data value

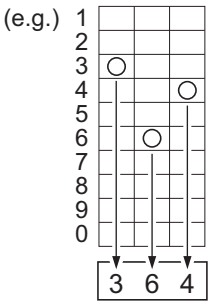

Setting: [Loop Sensor Control]
1. Select the item.
2. Select On or Off.

Display	Description	Initial setting
No.1	Sensor detection On/Off setting at 125 to 250 mm from the top of paper	On
No.2	Sensor detection On/Off setting at 250 to 290 mm from the top of paper	On
No.3	Sensor detection On/Off setting at 300 to 330 mm from the top of paper	On
No.4	Sensor detection On/Off setting at 350 to 370 mm from the top of paper	On

3. Press the start key. The setting is set.

Setting: [Set Loop Sensor Valid]
1. Select On or Off.
   Initial setting: On
2. Press the start key. The setting is set.

Completion
Press the stop key. The indication for selecting a maintenance item No. appears.

Item No.	Description
U053	**Setting the adjustment of the motor speed**

Description
Perform fine adjustment of the speeds of the motors.
Purpose
Basically, the setting need not be changed. Modify settings by interlock setting only if faulty images occur.

Method
1. Press the start key.
2. Select the item to be adjusted

Display	Description
Motor1	Adjustment of drum motor K speeds
Motor2	Adjustment of developer motor K, developer motor MCY, transfer motor, registration motor*1 and transfer cleaning motor speeds
Motor3	Adjustment of eject motor, fuser motor, BR conveying motor 1/2, paper feed motor, JS eject motor, middle motor and duplex motor 1/2*1 speeds
Motor4	Drum motor K speed adjustment in black/white mode
Motor5*2	Adjustment of developer motor K, transfer motor, registration motor and transfer cleaning motor speeds in black/white mode
Motor6*2	Adjustment of eject motor, fuser motor, BR conveying motor 1/2, paper feed motor, JS eject motor, middle motor and duplex motor 1/2 speeds in black/white mode
Motor1 Half	Adjustment of drum motor K speeds in half speed
Motor2 Half	Adjustment of developer motor K, developer motor MCY, transfer motor, registration motor*1 and transfer cleaning motor speeds in half speed
Motor3 Half	Adjustment of eject motor, fuser motor, BR conveying motor 1/2, paper feed motor, JS eject motor, middle motor and duplex motor 1/2*1 speeds in half speed
Motor1 3/4	Adjustment of drum motor K speeds at 3/4 times of line speed
Motor2 3/4	Adjustment of developer motor K, developer motor MCY, transfer motor, registration motor*1 and transfer cleaning motor speeds at 3/4 times of line speed
Motor3 3/4	Adjustment of eject motor, fuser motor, BR conveying motor 1/2, paper feed motor, JS eject motor, middle motor and duplex motor 1/2*1 speeds at 3/4 times of line speed

*1: 45/55 ppm model only. *2: 55 ppm model only.

Setting: [Motor1]
1. Select the item to be adjusted.

Display	Description	Setting range	Initial setting			
			30ppm	35ppm	45ppm	55ppm
Drum(K)	Drum motor K (DRM-K)	-5000 to 5000	19	16	12	11

Item No.	Description
U053	**Setting: [Motor2]** 1. Select the item to be adjusted.

Display	Description	Setting range	Initial setting			
			30ppm	35ppm	45ppm	55ppm
Dev(K)	Developer motor K (DEVM-K)	-5000 to 5000	0	0	0	0
Dev(CMY)	Developer motor MCY (DEVM-MCY)	-5000 to 5000	0	0	0	0
Trans Belt	Transfer motor (TRM)	-5000 to 5000	0	0	0	0
Regist*	Registration motor (RM)	-5000 to 5000	-	-	17	15
Belt Clean	Transfer cleaning motor (TRCM)	-5000 to 5000	0	0	0	0

*: 45 ppm/55 ppm model only

Setting: [Motor3]

1. Select the item to be adjusted.

Display	Description	Setting range	Initial setting			
			30ppm	35ppm	45ppm	55ppm
SB	Eject motor (EM)	-5000 to 5000	-31	-26	-20	-18
Fixing	Fuser motor (FUM)	-5000 to 5000	0	0	0	0
Bridge1	BR conveying motor 1 (BRCM1)	-5000 to 5000	-46	-39	-30	-27
Bridge2	BR conveying motor 2 (BRCM2)	-5000 to 5000	-46	-39	-30	-27
Feed	Paper feed motor (PFM)	-5000 to 5000	39	33	82	73
Job Separator	JS eject motor (JSEM)	-5000 to 5000	0	0	0	0
Mid Roller*	Middle motor (MM)	-5000 to 5000	-	-	18	16
DU1*	Duplex motor 1 (DUM1)	-5000 to 5000	-	-	-30	-27
DU2*	Duplex motor 2 (DUM2)	-5000 to 5000	-	-	-30	-27
Bridge1 DF High	BR conveying motor 1 (BRCM1)	-5000 to 5000	0	0	0	0
Bridge1 DF Low	BR conveying motor 1 (BRCM1)	-5000 to 5000	0	0	0	0
Bridge2 DF High	BR conveying motor 2 (BRCM2)	-5000 to 5000	0	0	0	0
Bridge2 DF Low	BR conveying motor 2 (BRCM2)	-5000 to 5000	0	0	0	0

*: 45 ppm/55 ppm model only.

Item No.	Description
U053	

Setting: [Motor4]

1. Select the item to be adjusted.

Display	Description	Setting range	Initial setting			
			30ppm	35ppm	45ppm	55ppm
Drum B/W(K)*	Drum motor K (DRM-K) in black/white mode	-5000 to 5000	-	-	-	25
Drum Mono(K)	Drum motor K (DRM-K) in monochrome mode	-5000 to 5000	42	36	28	22

*: 55 ppm model only.

Setting: [Motor5]

1. Select the item to be adjusted.

Display	Description	Setting range	Initial setting
Dev B/W(K)	Developer motor K (DEVM-K) in black/white mode	-5000 to 5000	0
Trans Belt B/W	Transfer motor (TRM) in black/white mode	-5000 to 5000	0
Regist B/W	Registration motor (RM) in black/white mode	-5000 to 5000	14
Belt Clean B/W	Transfer cleaning motor (TRCM) in black/white mode	-5000 to 5000	0

Setting: [Motor6]

1. Select the item to be adjusted.

Display	Description	Setting range	Initial setting
SB B/W	Eject motor (EM) in black/white mode	-5000 to 5000	-16
Fixing B/W	Fuser motor (FUM) in black/white mode	-5000 to 5000	0
Bridge1 B/W	BR conveying motor 1 (BRCM1) in black/white mode	-5000 to 5000	-25
Bridge2 B/W	BR conveying motor 2 (BRCM2) in black/white mode	-5000 to 5000	-25
Feed B/W	Paper feed motor (PFM) in black/white mode	-5000 to 5000	66
Job Separator B/W	JS eject motor (JSEM) in black/white mode	-5000 to 5000	0
Mid Roller B/W	Middle motor (MM) in black/white mode	-5000 to 5000	15
DU1 B/W	Duplex motor 1 (DUM1) in black/white mode	-5000 to 5000	-24
DU2 B/W	Duplex motor 2 (DUM2) in black/white mode	-5000 to 5000	-24

Item No.	Description
U053	

Setting: [Motor1 Half]

1. Select the item to be adjusted.

Display	Description	Setting range	Initial setting
Drum(K)	Drum motor K (DRM-K) in half speed	-5000 to 5000	0

Setting: [Motor2 Half]

1. Select the item to be adjusted.

Display	Description	Setting range	Initial setting			
			30ppm	35ppm	45ppm	55ppm
Dev(K)	Developer motor K (DEVM-K) in half speed	-5000 to 5000	0	0	0	0
Dev(CMY)	Developer motor MCY (DEVM-MCY) in half speed	-5000 to 5000	0	0	0	0
Trans Belt	Transfer motor (TRM) in half speed	-5000 to 5000	0	0	0	0
Regist*	Registration motor (RM) in half speed	-5000 to 5000	-	-	34	30
Belt Clean	Transfer cleaning motor (TRCM) in half speed	-5000 to 5000	0	0	0	0

*: 45 ppm/55 ppm model only.

Setting: [Motor3 Half]

Select the item to be adjusted.

Display	Description	Setting range	Initial setting			
			30ppm	35ppm	45ppm	55ppm
SB	Eject motor (EM) in half speed	-5000 to 5000	-61	-52	-41	-36
Fixing	Fuser motor (FUM) in half speed	-5000 to 5000	0	0	0	0
Bridge1	BR conveying motor 1 (BRCM1) in half speed	-5000 to 5000	-65	-55	-43	-38
Bridge2	BR conveying motor 2 (BRCM2) in half speed	-5000 to 5000	-65	-55	-43	-38
Feed	Paper feed motor (PFM) in half speed	-5000 to 5000	77	66	164	147
Job Separator	JS eject motor (JSEM) in half speed	-5000 to 5000	0	0	0	0
Mid Roller*	Middle motor (MM) in half speed	-5000 to 5000	-	-	36	32

Item No.	Description
U053	

Display	Description	Setting range	Initial setting			
			30ppm	35ppm	45ppm	55ppm
DU1*	Duplex motor 1 (DUM1) in half speed	-5000 to 5000	-	-	-60	-54
DU2*	Duplex motor 2 (DUM2) in half speed	-5000 to 5000	-	-	-60	-54

1. *: 45 ppm/55 ppm model only.

Setting: [Motor1 3/4]

1. Select the item to be adjusted.

Display	Description	Setting range	Initial setting
Drum(K)	Drum motor K (DRM-K) at 3/4 times of line speed	-5000 to 5000	0

Setting: [Motor2 3/4]

1. Select the item to be adjusted.

Display	Description	Setting range	Initial setting
Dev(K)	Developer motor K (DEVM-K) at 3/4 times of line speed	-5000 to 5000	0
Dev(CMY)	Developer motor MCY (DEVM-MCY) at 3/4 times of line speed	-5000 to 5000	0
Trans Belt	Transfer motor (TRM) at 3/4 times of line speed	-5000 to 5000	0
Regist*	Registration motor (RM) at 3/4 times of line speed	-5000 to 5000	22
Belt Clean	Transfer cleaning motor (TRCM) at 3/4 times of line speed	-5000 to 5000	0

*: 45 ppm/55 ppm model only.

Item No.	Description
U053	**Setting: [Motor3 3/4]** 1. Select the item to be adjusted.

Display	Description	Setting range	Initial setting			
			30ppm	35ppm	45ppm	55ppm
SB	Eject motor (EM) at 3/4 times of line speed	-5000 to 5000	-40	-36	-26	-26
Fixing	Fuser motor (FUM) at 3/4 times of line speed	-5000 to 5000	0	0	0	0
Bridge1	BR conveying motor 1 (BRCM1) at 3/4 times of line speed	-5000 to 5000	-61	-54	-39	-39
Bridge2	BR conveying motor 2 (BRCM2) at 3/4 times of line speed	-5000 to 5000	-61	-54	-39	-39
Feed	Paper feed motor (PFM) at 3/4 times of line speed	-5000 to 5000	50	45	106	106
Job Separator	JS eject motor (JSEM) at 3/4 times of line speed	-5000 to 5000	0	0	0	0
Mid Roller*	Middle motor (MM) at 3/4 times of line speed	-5000 to 5000	-	-	23	23
DU1*	Duplex motor 1 (DUM1) at 3/4 times of line speed	-5000 to 5000	-	-	-39	-39
DU2*	Duplex motor 2 (DUM2) at 3/4 times of line speed	-5000 to 5000	-	-	-39	-39

*: 45 ppm/55 ppm model only.

Completion

Press the stop key. The indication for selecting a maintenance item No. appears.

Item No.	Description
U059	**Setting fan mode** **Description** Specifies mode for developer fan motors. **Purpose** Handling the lowering density [to suppress thermal stresses owing to the heated toner] **Method** 1. Press the start key. 2. Select the mode.

Display	Description
Fan Mode	Sets threshold temperature at which developer fan motors operate.
Cooling Mode	Sets temperature at which the developer fan motors are switched for controlling.

Setting: [Fan Mode]

1. Select the mode.

Display	Description
Mode1	Setting temperature:Normal
Mode2	Setting temperature:Temperature threshold is raised from mode1 (WUP, temperature at READY : mode1 temperature -7(°C), Temperature at PRINT : mode1 temperature -3(°C).)
Mode3	Setting temperature:Temperature threshold is raised from mode2 (WUP, temperature at READY : mode1 temperature -22(°C), Temperature at PRINT : mode1 temperature -8(°C).)
Auto	Starting with Mode 2 at power up or recovery from sleep mode, and switches to Mode 3 when the termistor detects a developer temperature BK is equal to or higher than 38°C. The device never reverts from mode 2 from mode 3 while power is on.

Initial setting: Mode1

2. Press the start key. The setting is set.

Setting: [Cooling Mode]

1. Change the setting value using the +/- keys.

Display	Description	Setting range	Initial setting
Cooling Mode	Amount of shift from the initial standard temperature	-3 to 3 (°C)	0

A larger value advances the operating timing, and a smaller value slows it.

2. Press the start key. The value is set.

Completion

Press the stop key. The indication for selecting a maintenance item No. appears.

Item No.	Description
U061	**Checking the operation of the exposure lamp** **Description** Lights the exposure lamp. **Purpose** To check whether the exposure lamp are turned on. **Method** 1. Press the start key. 2. Select the item. Display / Description CCD: The exposure lamp lights CIS: The CIS lights (when dual scan DP is installed) 3. Press the start key. The lamp lights. 4. To turn the lamp off, press the stop key. **Completion** Press the stop key. The screen for selecting a maintenance item No. is displayed.
U063	**Adjusting the shading position** **Description** Changes the shading position of the scanner. **Purpose** Used when the white line continue to appear longitudinally on the image after the shading plate is cleaned. This is due to flaws or stains inside the shading plate. To prevent this problem, the shading position should be changed so that shading is possible without being affected by the flaws or stains. **Setting** 1. Press the start key. 2. Change the setting value using the +/- keys or numeric keys. Display / Description / Setting range / Initial setting / Change in value per step Position / Shading position / 0 to 18 / 0 / 0.158 mm Increasing the value moves the shading position toward the machine left, and decreasing it moves the position toward the machine right. 3. Press the start key. The value is set. **Supplement** While this maintenance item is being executed, copying from an original is available in interrupt copying mode (which is activated by pressing the system menu key). **Completion** Press the stop key. The screen for selecting a maintenance item No. is displayed.

Item No.	Description
U065	**Adjusting the scanner magnification**

Description
Adjusts the magnification of the original scanning.
Purpose
Make the adjustment if the magnification in the main scanning direction is incorrect.
Make the adjustment if the magnification in the auxiliary scanning direction is incorrect.

Caution
The magnification adjustment along the main scanning direction could cause black streaks depending on the content of the original document.
Adjust the magnification of the scanner in the following order.

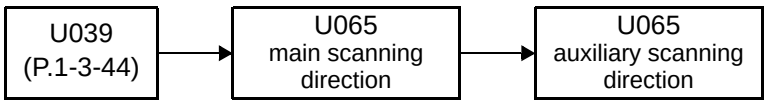

Method
1. Press the start key.
2. Press the system menu key.
3. Place an original and press the start key to make a test copy.
4. Press the system menu key.
5. Select the item to be adjusted.

Display	Description	Setting range	Initial setting	Change in value per step
Main Scan	Scanner magnification in the main scanning direction	-75 to 75	0	0.02 %
Sub Scan	Scanner magnification in the auxiliary scanning direction	-125 to 125	0	0.02 %

Adjustment: [Main Scan]
1. Change the setting value using the +/- keys or numeric keys.
   For copy example 1, increase the value. For copy example 2, decrease the value.
   Increasing the setting enlarges the image and decreasing it narrows the image.

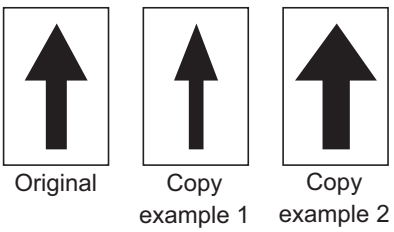

Figure 1-3-8

2. Press the start key. The value is set.

Item No.	Description
U065	**Adjustment: [Sub Scan]** 1. Change the setting value using the +/- keys or numeric keys. For copy example 1, increase the value. For copy example 2, decrease the value. Increasing the value makes the image longer, while decreasing the value makes the image shorter. 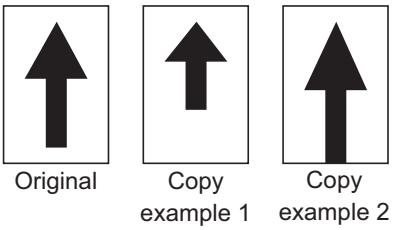 **Figure 1-3-9** 2. Press the start key. The value is set. **Completion** Press the stop key. The screen for selecting a maintenance item No. is displayed.

Item No.	Description
U066	**Adjusting the scanner leading edge registration**

Description
Adjusts the scanner leading edge registration of the original scanning.
Purpose
Make the adjustment if there is a regular error between the leading edges of the copy image and original.

Adjustment
1. Press the start key.
2. Press the system menu key.
3. Place an original and press the start key to make a test copy.
4. Press the system menu key.
5. Select the item to be adjusted.

Display	Description	Setting range	Initial setting	Change in value per step
Front	Scanner leading edge registration	-30 to 30	0	0.158 mm
Rotate	Scanner leading edge registration (rotate copying)	-30 to 30	0	0.158 mm

6. Change the setting value using the +/- keys or numeric keys.
   For copy example 1, increase the value. For copy example 2, decrease the value.
   Increasing the value moves the image forward and decreasing the value moves the image backward.

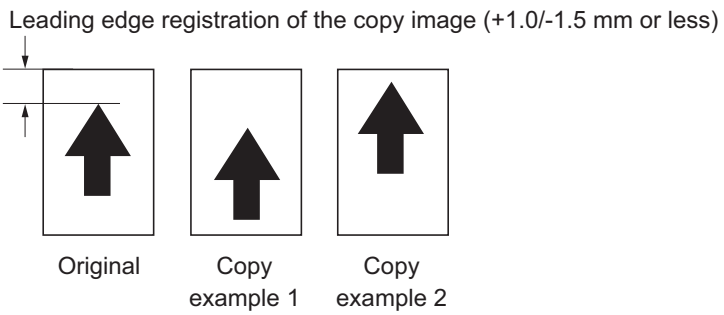

Figure 1-3-10

7. Press the start key. The value is set.

Caution
If the above adjustment does not optimize the leading edge registration, proceed with the following maintenance modes.

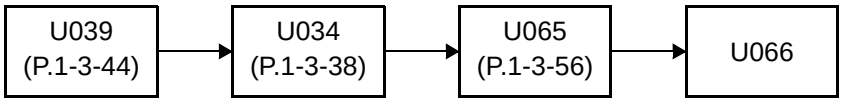

Completion
Press the stop key. The screen for selecting a maintenance item No. is displayed.

Item No.	Description
U067	**Adjusting the scanner center line**

Description
Adjusts the scanner center line of the original scanning.
Purpose
Make the adjustment if there is a regular error between the center lines of the copy image and original.

Adjustment
1. Press the start key.
2. Press the system menu key.
3. Place an original and press the start key to make a test copy.
4. Press the system menu key.
5. Select the item to be adjusted.l

Display	Description	Setting range	Initial setting	Change in value per step
Front	Scanner center line	-60 to 60	0	0.085 mm
Rotate	Scanner center line (rotate copying)	-40 to 40	0	0.085 mm

6. Change the setting value using the +/- keys or numeric keys.
   For copy example 1, decrease the value. For copy example 2, increase the value.
   Increasing the value moves the image leftward and decreasing it moves the image rightward.

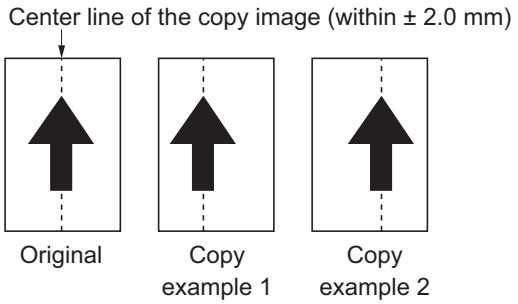

Figure 1-3-11

7. Press the start key. The value is set.

Caution
If the above adjustment does not optimize the center line, proceed with the following maintenance modes.

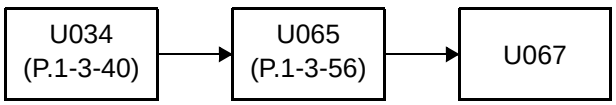

Completion
Press the stop key. The screen for selecting a maintenance item No. is displayed.

Item No.	Description
U068	**Adjusting the scanning position for originals from the DP** **Description** Adjusts the position for scanning originals from the DP. Perform the test copy at the four scanning positions after adjusting. **Purpose** Used when the image fogging occurs because the scanning position is not proper when the DP is used. Run U071 to adjust the timing of DP leading edge when the scanning position is changed. **Setting** 1. Press the start key.l

Display	Description	Setting range	Initial setting	Change in value per step
DP Read	Starting position adjustment for scanning originals	-38 to 38	0	0.158 mm
Black Line	Scanning position for the test copy originals	0 to 3	0	-

2. Select [DP Read].
3. Change the setting using the +/- keys or numeric keys.
   When the setting value is increased, the scanning position moves to the right and it moves to the left when the setting value is decreased.
4. Press the start key. The value is set.
5. Select [Black Line].
6. Change the setting using the +/- keys or numeric keys.
7. Press the start key. The value is set.
8. Set the original (the one which density is known) in the DP and press the system menu key.
9. Press the start key. Test copy is executed.
10. Perform the test copy at each scanning position with the setting value from 0 to 3 and check that no black line appears and the image is normally scanned.

Completion
Press the stop key. The screen for selecting a maintenance item No. is displayed.

Item No.	Description
U070	**Adjusting the DP magnification**

Description
Adjusts the DP original scanning speed.
Purpose
Make the adjustment if the magnification is incorrect in the auxiliary scanning direction when the DP is used.
Make the adjustment if the magnification is incorrect in the main scanning direction when the CIS is used.

Adjustment
1. Press the start key.
2. Press the system menu key.
3. Place an original on the DP and press the start key to make a test copy.
4. Press the system menu key.
5. Select the item to be adjusted.l

Display	Description	Setting range	Initial setting	Change in value per step
Sub Scan(F)	Magnification in the auxiliary scanning direction of CCD (first side)	-125 to 125	0	0.02 %
Sub Scan(B)*1	Magnification in the auxiliary scanning direction of CCD (second side)	-125 to 125	0	0.02 %
Main Scan(CIS)*2	Magnification in the main scan-ning direction of CIS	-100 to 100	0	0.02 %
Sub Scan(CIS)*2	Magnification in the auxiliary scanning direction of CIS	-125 to 125	0	0.02 %

*1: Reversed DP only. *2: Dual scan DP only.

Adjustment: [Sub Scan]
1. Change the setting value using the +/- keys or numeric keys.
   For copy example 1, increase the value. For copy example 2, decrease the value.
   Increasing the value makes the image longer, while decreasing the value makes the image shorter.

Original Copy example 1 Copy example 2

Figure 1-3-12

2. Press the start key. The value is set.

Item No.	Description
U070	**Adjustment: [Main Scan]** 1. Change the setting value using the +/- keys or numeric keys. For copy example 1, increase the value. For copy example 2, decrease the value. Increasing the setting enlarges the image and decreasing it narrows the image. 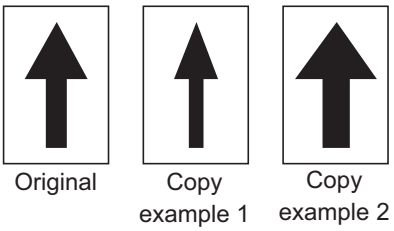 **Figure 1-3-13** 2. Press the start key. The value is set. **Caution** If the above adjustment does not optimize the magnification, perform the following maintenance modes. U039 (P.1-3-44) → U070 **Completion** Press the stop key. The screen for selecting a maintenance item No. is displayed.

Item No.	Description
U071	**Adjusting the DP scanning timing**

Description
Adjusts the DP original scanning timing.
Purpose
Make the adjustment if there is a regular error between the leading or trailing edges of the original and the copy image when the DP is used.

Method
1. Press the start key.
2. Press the system menu key.
3. Place an original on the DP and press the start key to make a test copy.
4. Press the system menu key.
5. Select the item to be adjusted.l
   Reversed DP

Display	Description	Setting range	Initial setting	Change in value per step
Front Head	Leading edge registration of CCD (first side)	-32 to 32	0	0.085 mm
Front Tail	Trailing edge registration of CCD (first side)	-32 to 32	0	0.085 mm
Back Head	Leading edge registration of CCD (second side)	-32 to 32	0	0.085 mm
Back Tail	Trailing edge registration of CCD (second side)	-32 to 32	0	0.085 mm

Dual scan DP

Display	Description	Setting range	Initial setting	Change in value per step
Front Head	Leading edge registration of CCD (first side)	-27 to 27	0	0.207 mm
Front Tail	Trailing edge registration of CCD (first side)	-27 to 27	0	0.207 mm
CIS Head	Leading edge registration of CIS	-27 to 27	0	0.207 mm
CIS Tail	Trailing edge registration of CIS	-27 to 27	0	0.207 mm

Item No.	Description
U071	**Adjustment: Leading edge registration** 1. Change the setting value using the +/- keys or numeric keys. For copy example 1, increase the value. For copy example 2, decrease the value. Increasing the value moves the image forward and decreasing the value moves the image backward. 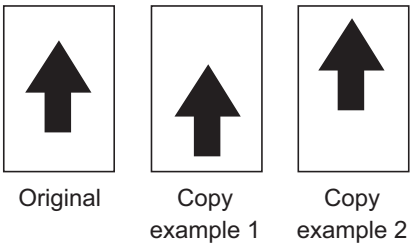 **Figure 1-3-14** 2. Press the start key. The value is set. **Caution** If the first side is adjusted, check the second side and if adjustment is required, carry out the adjustment. If the above adjustment does not optimize the leading edge registration, proceed with the following maintenance modes. U039 (P.1-3-44) → U034 (P.1-3-38) → U071 **Adjustment: Trailing edge registration** 1. Change the setting value using the +/- keys or numeric keys. For copy example 1, increase the value. For copy example 2, decrease the value. 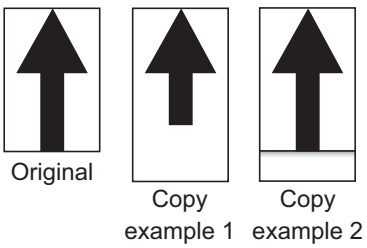 **Figure 1-3-15** 2. Press the start key. The value is set. **Caution** If the first side is adjusted, check the second side and if adjustment is required, carry out the adjustment. **Completion** Press the stop key. The screen for selecting a maintenance item No. is displayed.

Item No.	Description
U072	

Adjusting the DP center line

Description
Adjusts the scanning start position for the DP original.
Purpose
Make the adjustment if there is a regular error between the centers of the original and the copy image when the DP is used.

Adjustment
1. Press the start key.
2. Press the system menu key.
3. Place an original on the DP and press the start key to make a test copy.
4. Press the system menu key.
5. Select the item to be adjusted.l

Display	Description	Setting range	Initial setting	Change in value per step
Front	DP center line (first side)	-60 to 60	0	0.085 mm
Back	DP center line (second side)	-60 to 60	0	0.085 mm
CIS*	CIS center line	-39 to 39	0	0.085 mm

*: Dual scan DP only

6. Change the setting value using the +/- keys or numeric keys.
   For copy example 1, increase the value. For copy example 2, decrease the value.
   Increasing the value moves the image rightward and decreasing it moves the image leftward.

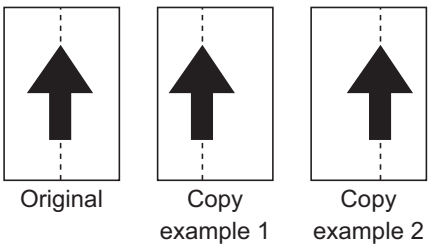

Figure 1-3-16

7. Press the start key. The value is set.

Caution
If the first side is adjusted, check the second side and if adjustment is required, carry out the adjustment.
If the above adjustment does not optimize the center line, proceed with the following maintenance modes.

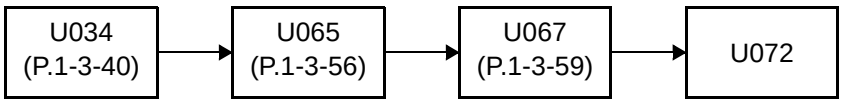

Completion
Press the stop key. The screen for selecting a maintenance item No. is displayed.

Item No.	Description
U073	**Checking the scanner operation**

Description
Simulates the scanner operation under the arbitrary conditions.
Purpose
To check the scanner operation. This is also done to check the accumulation of dust on the slit glass.

Method
1. Press the start key.
2. Select the item to be operated.

Display	Description
Scanner Motor	Scanner operation
Home Position	Home position operation
Dust Check	Dust adhesion check operation with lamp on
DP Reading	DP scanning position operation

Setting: [Scanner Motor]
1. Select [Scanner Motor].
2. Select the item.
3. Change the setting using the +/- keys.

Display	Operating conditions	Setting range	Initial setting
Zoom	Magnification	25 to 400 %	100
Size	Original size	See below.	10200
Lamp	On and off of the exposure lamp	0 (off) or 1 (on)	1

Original sizes for each setting in SIZE

Setting	Paper size	Setting	Paper size
5000	A4	5000	A5R
4300	B5	7800	Folio
5100	11" x 8 1/2"	10200	11" x 17"
10000	A3	9000	11" x 15"
8600	B4	8400	8 1/2" x 14"
7100	A4R	6600	8 1/2" x 11"
6100	B5R	5100	5 1/2" x 8 1/2"

4. Press the start key. The setting is set.
5. Select [Execute].
6. Press the start key. Scanning starts under the selected conditions.
7. To stop operation, press the stop key.

Item No.	Description
U073	**Method: [Home Position]** 1. Select [Home Position]. 2. Press the start key. The mirror frame of the scanner moves to the home position. **Method: [Dust Check]** 1. Select [Dust Check]. 2. Press the start key. The exposure lamp lights. 3. To turn the exposure lamp off, press the stop key. **Method: [DP Reading]** 1. Select [DP Reading]. 2. Press the start key. The mirror frame of the scanner moves to the reading position. **Completion** Press the stop key when scanning stops. The screen for selecting a maintenance item No. is displayed.

Item No.	Description
U074	**DP input response adjustment** **Description** Sets the density correction for scanning originals from the DP. **Purpose** Modify the setting only if a spotted background appears when a bluish original or a document with a background that is slightly colored is scanned from the DP. Perform adjustment if the page scanned using the table and the page scanned using DP do not match. **Setting** 1. Press the start key. 2. Change the setting using the +/- or numeric keys. Display: Coefficient Description: Compensating original document scanning density Setting range: 0 to 3 Initial setting: 1 Settings 0: No correction / 1: Slight correction / 2: Medium correction / 3: Strong correction 3. Press the start key. The value is set. **Supplement** While this maintenance item is being executed, copying from an original is available in interrupt copying mode (which is activated by pressing the system menu key). **Completion** Press the stop key. The screen for selecting a maintenance item No. is displayed.

Item No.	Description
U087	**Setting DP reading position modification operation**

Description
The presence or absence of dust is determined by comparing the scan data of the original trailing edge and that taken after the original is conveyed past the DP original scanning position. If dust is identified, the DP original scanning position is adjusted for the following originals.
Using image correction to reduce black streaks.

Purpose
When using DP, to solve the problem when black lines occurs due to the dust with respect to original reading position.

Caution
The coordinates of position where documents are scanned are modified when [System Menu] [Adjustment/Maintenance] [Correcting Black Line] is set to [Off].

Method
1. Press the start key.
2. Select the item to be set.

Display	Description
CCD	Setting of standard data when dust is detected.
Black Line	Initialization of original reading position.

Setting: [CCD]
1. Select the item to be set.
2. Change the value using the +/- or numeric keys.

Display	Description	Setting range	Initial setting
R	Lowest density of the R regard as the dust	0 to 255	125
G	Lowest density of the G regard as the dust	0 to 255	125
B	Lowest density of the B regard as the dust	0 to 255	125

* : Decreasing the setting makes the objects with less density recognized as dusts, less dusts becomes detectable.
Increasing the value allows more dusts to be detected and the cleaning prompts to be displayed more often.

3. Press the start key. The value is set.

Method: [Black Line]
1. Select [Clear].
2. Press the start key. The setting is cleared.

Completion
Press the stop key. The screen for selecting a maintenance item No. is displayed.

Item No.	Description
U089	**Outputting a MIP-PG pattern** **Description** Selects and outputs the MIP-PG pattern created in the machine. **Purpose** To check copier status other than scanner when adjusting image printing, using MIP-PG pattern output (with-out scanning). **Method** 1. Press the start key. 2. Select the MIP-PG pattern to be output and press the start key. **Display** / **Description** / **Purpose** 256Gradation / 256-gradation PG / To check the gradation reproducibility Color Belt / Four color belts PG / To check the developer state and the engine section ID Gray(C) / Cyan PG / To check the drum quality Gray(M) / Magenta PG / To check the drum quality Gray(Y) / Yellow PG / To check the drum quality Gray(K) / Black PG / To check the drum quality White / Blank paper PG / To check the drum quality Gradation Gray / 5-graduation gray PG / To check for vertical lines on the laser scanner unit Sample Set / Four color belts PG, Cyan PG, Magenta PG, Yellow PG and Black PG / Pattern output for LLU assurance application 3. Press the system menu key. 4. Press the start key. A MIP-PG pattern is output. **Completion** Press the stop key. The screen for selecting a maintenance item No. is displayed.

Item No.	Description
U091	**Setting the white line correction** **Description** Sets the error detection threshold value for white line correction and displays the count result of abnormal pixels. **Purpose** To perform when replacing the CIS, DP main PWB or CIS roller. **Method** 1. Press the start key. 2. Select the item.

Display	Description
Calculation(R)	Abnormal pixel count result for color R
Calculation(G)	Abnormal pixel count result for color G
Calculation(B)	Abnormal pixel count result for color B
Threshold(R)	Abnormal pixel detection threshold value for color R
Threshold(G)	Abnormal pixel detection threshold value for color G
Threshold(B)	Abnormal pixel detection threshold value for color B
Threshold (Abnormal)	Abnormal pixel threshold value setting
Mode	Switching between white line correction mode ON/OFF
Execute	Holding of white reference data

Method: white line correction

1. Press [Execute].
2. Press the start key. Holding of white reference data is started.
3. The count result of abnormal pixels is displayed.
4. Press the system menu key.
5. Place a gray original on the DP with the gray side down. Load paper in the cassette.
   The paper should be the same size as the original.
6. Press the start key.
   Two test pattern sheets will be printed.(1 st sheet: Approx. 60 mm black band, 2nd sheet: Blank or approx. 60 mm gray band)
7. If vertical black lines appear on the blank (or gray band) page and vertical white lines appear on the black band in the same position, clean the CIS roller and the CIS glass and then repeat white line correction.
   If vertical black lines or vertical white lines appear on both sheets, white line correction has been completed normally. However, the cause of the vertical lines lies in the engine, and thus the engine must be checked.
8. Press the system menu key.
   Mode is set to 1.

Item No.	Description
U091	**How to view test copies**

blank sheet	black band	Causes	Corrective measures
No lines	No lines	-	Complete
Black lines	White lines	Dirty CIS roller or CIS glass	Clean CIS roller or CIS glass and then perform U091 again
Black lines	No lines	Engine side	U091 ends, check engine
No lines	White lines	Engine side	U091 ends, check engine

Setting: Threshold value setting

1. Select the item to be set.
2. Change the value using the +/- or numeric keys.

Display	Description	Setting range	Initial setting
Threshold (R)(G)(B)	Displaying of abnormal pixel detection threshold value for color RGB	0 to 1023	112/112/112
Threshold (Abnormal)	Abnormal pixel threshold value setting	0 to 8191	75
Mode	Switching between white line correction mode ON/OFF	0: OFF/ 1: ON/ 2: Test mode	0

* : Normally the Threshold (Com) value should not be changed from 112, the initial setting.
If white lines appear even though the CIS roller and glass are not dirty, raise the set value.
If fine lines in some originals disappear, lower the set value.
Set within the range 50 to 200. (If set outside this range, the image may be affected.)

3. Press the start key. The value is set.

Completion

Press the stop key. The screen for selecting a maintenance item No. is displayed.

U099

Adjusting original size detection

Description

Checks the operation of the original size detection and sets the sensing threshold value.

Purpose

Modify the threshold of detection if documents are frequently mal-detected in size after scanning a wholly dark document or a document enclosed with dark objects on edges.

Method

1. Press the start key.
2. Select the item.

Display	Description
Data1	Displays the width of an Original Area colored original document
B/W Level1	Setting original size detection threshold value
Data2	Displays the width of an Original Area colored original document (when DP is installed)

Item No.	Description
U099	**Method: [Data1/Data2]** 1. Place the original and close the original cover or DP 2. The light source illuminates and the CCD sensor determines the width of the document. The original size sensor determines the document is vertical or horizontal. (The document is detected two times when the DP is installed.)

Display	Description
Original Area R	Detected original width size for color R
Original Area G	Detected original width size for color G
Original Area B	Detected original width size for color B
Original Area	Detected original width size
Size SW L	Displays the original size sensor (OSS) ON/OFF

Setting: [B/W Level1]

1. Select an item to be set.
2. Change the setting value using the +/- keys or numeric keys.l

Display	Description	Setting range	Initial setting*
Original R1	Original threshold value for color R (near side)	0 to 255	20/50
Original R2	Original threshold value for color R (center)	0 to 255	30/50
Original R3	Original threshold value for color R (far side)	0 to 255	40/50
Original G1	Original threshold value for color G (near side)	0 to 255	20/50
Original G2	Original threshold value for color G (center)	0 to 255	30/50
Original G3	Original threshold value for color G (far side)	0 to 255	40/50
Original B1	Original threshold value for color B (near side)	0 to 255	20/50
Original B2	Original threshold value for color B (center)	0 to 255	30/50
Original B3	Original threshold value for color B (far side)	0 to 255	40/50

*:DP is not installed/DP is installed

Reducing the value increases the sensitivity of the sensor allowing a document with more density to be detected, however, the document mat could be detected as an original document.

If the values vary excessively, mal-detection could occur depending on how a document is placed.

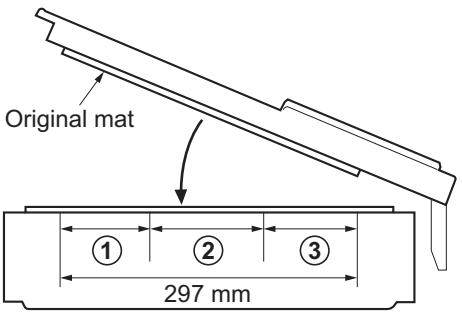

Fig.	Original R/G/B	Original width size range	
①	1	A4R to A3	8.5" to 11"
②	2	B6R to A4R	5.5" to 8.5"
③	3	to B6R	to 5.5"

Figure 1-3-17

3. Press the start key. The value is set.

Item No.	Description
U099	**Completion** Press the stop key. The screen for maintenance item No. is displayed.
U100	**Adjusting main high voltage** **Description** Controls the charger roller voltage to optimize the surface potential. **Purpose** To change the setting value to adjust the image if an image failure (background blur, etc.) occurs. **Method** 1. Press the start key. 1. Select an item and press the start key.

Display	Description
Adj AC Bias	Main charger AC bias for each color
Set AC Auto Adj	Setting the AC bias auto adjustment
Set DC Bias	Main charger DC bias for each color
Adj DC Bias	Additional surface potential
Set Low Temp	Pre-charge time at power supply ON
Set Charger Freq	Setting the main charger frequency
Chk Current	Rush current display
Set AC Gain	Setting the AC Gain

Setting: [Adj AC Bias]

1. Change the value using the +/- or numeric keys.
   Increasing the setting makes the image lighter; decreasing it makes the image darker.
   The values set vary depending on environments.

Display	Description	Setting range
AC Bias(C)	Main charger AC bias for cyan	0 to 255
AC Bias(M)	Main charger AC bias for magenta	0 to 255
AC Bias(Y)	Main charger AC bias for yellow	0 to 255
AC Bias(K)	Main charger AC bias for black	0 to 255
AC Bias B/W(K)*	Main charger AC bias for black in black/white mode	0 to 255

   *****: 55 ppm model only.
2. Press the start key. The value is set.

Setting: [Set AC Auto Adj]

1. Select On or Off.

Display	Description
On	Turn auto adjustment ON
Off	Turn auto adjustment OFF

   Initial setting: On
2. Press the start key. The setting is set.

Item No.	Description
U100	

Displaying: [Set DC Bias]

1. The current setting is displayed.

Display	Description
DC1 Bias(C)	Main charger DC bias for cyan (full speed)
DC1 Bias Half(C)	Main charger DC bias for cyan (half speed)
DC1 Bias(M)	Main charger DC bias for magenta (full speed)
DC1 Bias Half(M)	Main charger DC bias for magenta (half speed)
DC1 Bias(Y)	Main charger DC bias for yellow (full speed)
DC1 Bias Half(Y)	Main charger DC bias for yellow (half speed)
DC1 Bias(K)	Main charger DC bias for black (full speed)
DC1 Bias Half(K)	Main charger DC bias for black (half speed)
DC1 Bias B/W(K)*	Main charger DC bias for black in black/white mode

*: 55 ppm model only.

Setting: [Adj DC Bias]

1. Select the item to be set.
2. Change the value using the +/- or numeric keys.
   Increasing the setting makes the image lighter; decreasing it makes the image darker.l

Display	Description	Setting range	Initial setting
DC2 Bias(C)	Main charger DC bias for cyan (full speed)	128 to 127	0
DC2 Bias Half(C)	Main charger DC bias for cyan (half speed)	128 to 127	0
DC2 Bias(M)	Main charger DC bias for magenta (full speed)	128 to 127	0
DC2 Bias Half(M)	Main charger DC bias for magenta (half speed)	128 to 127	0
DC2 Bias(Y)	Main charger DC bias for yellow (full speed)	128 to 127	0
DC2 Bias Half(Y)	Main charger DC bias for yellow (half speed)	128 to 127	0
DC2 Bias(K)	Main charger DC bias for black (full speed)	128 to 127	0
DC2 Bias Half(K)	Main charger DC bias for black (half speed)	128 to 127	0
DC2 Bias B/W(K)*	Main charger DC bias for black in black/white mode		

*: 55 ppm model only.

3. Press the start key. The value is set.

Setting: [Set Low Temp]

1. Change the value using the +/- or numeric keys.l

Display	Description	Setting range	Initial setting
Set Low Temp	Pre-charge time at power supply ON	0 to 6	1

2. Press the start key. The value is set.

Item No.	Description
U100	

Setting: [Set Charger Freq]

1. Select the item to be set.
2. Change the value using the +/- or numeric keys.ll

Display	Description	Setting range	Initial setting			
			30ppm	35ppm	45ppm	55ppm
Generally	Main charger frequency	7500 to 11280	10442	8857	8807	11022
B/W*	Main charger frequency in black/white mode	7500 to 11280	-	-	-	10690
Half	Main charger frequency in half speed	7500 to 11280	10690	10690	10690	10690
3/4	Main charger frequency at 3/4 times of line speed	7500 to 11280	10690	10690	8857	8857

*: 55 ppm model only.

3. Press the start key. The value is set.

Displaying: [Chk Current]

1. The current setting is displayed.

Display	Description
C	Cyan rush current
M	Magenta rush current
Y	Yellow rush current
K	Black rush current

Setting: [Set AC Gain]

1. Select the item to be set.

Display	Description
Auto	Automatically adjusted in accordance with the environment (Default)
Mode1	Use this setting when C2203 occurs (Multiplier = 0.95)
Mode2	Use this setting when charging pitch streaks (horizontal) occur (Multiplier = 1.05)
Mode3	Use this setting if C2203 occurred and the charging pitch streaks (horizontal) has been observed despite mode1 has been selected.

Initial setting: Auto

2. Press the start key. The setting is set.

Completion

Press the stop key. The screen for maintenance item No. is displayed.

Item No.	Description
U101	**Setting the voltage for the primary transfer**

Description
Sets the control voltage for the primary transfer.
Purpose
To change the setting when any density problems, such as too dark or light, occur.

Setting
1. Press the start key.
2. Select the item to be set.

Display	Description
Normal	Setting the primary transfer positive voltage
Add Color	Setting the addition value (The addition value at the surface is referenced as standard)
Add Color 2nd	Setting the addition value for the second side
Surround Correct	Environmental correction ON/OFF setting

Setting: [Normal]
1. Select the item to be set.
1. Change the value using the +/- or numeric keys.ll

Display	Description	Setting range	Initial setting			
			30ppm	35ppm	45ppm	55ppm
Full	Primary transfer positive voltage for yellow (full speed)	0 to 255	114	118	126	131
Half	Primary transfer positive voltage for yellow (half speed)	0 to 255	101	103	108	110
3/4	Primary transfer positive voltage for yellow at 3/4 times of line speed	0 to 255	110	110	118	118
B/W*	Primary transfer positive voltage for yellow in black/white mode	0 to 255	-	-	-	135

*: 55 ppm model only.
2. Press the start key. The value is set.

Setting: [Add Color]
1. Select the item to be set.

Display	Description
Normal	Setting the addition value (Full speed)
Heavy 4/5	Setting the addition value (Heavy 4/5)

Item No.	Description
U101	2. Change the value using the +/- or numeric keys.

[Normal]l

Display	Description	Setting range	Initial setting
C	Addition value (cyan)	-127 to 127	2
M	Addition value (magenta)	-127 to 127	2
Y	Addition value (black)	-127 to 127	15

[Heavy 4/5]l

Display	Description	Setting range	Initial setting
C	Addition value (cyan)	-127 to 127	2
M	Addition value (magenta)	-127 to 127	2
Y	Addition value (black)	-127 to 127	15

3. Press the start key. The value is set.

Setting: [Add Color 2nd]

1. Select the item to be set.

Display	Description
Normal	Setting the addition value (Full speed)
Heavy 4/5	Setting the addition value (Heavy 4/5)

2. Change the value using the +/- or numeric keys.l

[Normal]

Display	Description	Setting range	Initial setting			
			30ppm	35ppm	45ppm	55ppm
C	Addition value for the second side (cyan)	-127 to 127	-4	-4	-5	-6
M	Addition value for the second side (magenta)	-127 to 127	-4	-4	-5	-6
Y	Addition value for the second side (yellow)	-127 to 127	-2	-2	-3	-4
K	Addition value for the second side (black)	-127 to 127	-17	-17	-18	-19

Item No.	Description
U101	[Heavy 4/5]

Display	Description	Setting range	Initial setting			
			30ppm	35ppm	45ppm	55ppm
C	Addition value for the second side (cyan)	-127 to 127	-2	-2	-3	-4
M	Addition value for the second side (magenta)	-127 to 127	-4	-4	-5	-6
Y	Addition value for the second side (yellow)	-127 to 127	-4	4	-5	-6
K	Addition value for the second side (black)	-127 to 127	-17	-17	-18	-19

3. Press the start key. The value is set.

Setting: [Surround Correct]

1. Select On or Off.

Display	Description
On	Environmental correction is not performed
Off	Environmental correction is performed

Initial setting: Off

2. Press the start key. The setting is set.

Supplement

While this maintenance item is being executed, copying from an original is available in interrupt copying mode (which is activated by pressing the system menu key).

Completion

Press the stop key. The screen for selecting a maintenance item No. is displayed.

Item No.	Description
U106	**Setting the voltage for the secondary transfer** **Description** Sets the control voltage for the secondary transfer depending on each paper type. **Purpose** To change the setting when any density problems, such as too dark or light, occur. **Method** 1. Press the start key. 2. Select the item to be set.

Display	Description
Light/Normal1	Control voltage for the transfer bias on paper with thickness 52 g/m^2 to 64 g/m^2 and 65 g/m^2 to 75 g/m^2
Normal2/3	Control voltage for the transfer bias on paper with thickness 76 g/m^2 to 105 g/m^2
Heavy1	Control voltage for the transfer bias on paper with thickness 106 g/m^2 to 135 g/m^2
Heavy2/3	Control voltage for the transfer bias on paper with thickness 136 g/m^2 to 220 g/m^2
Heavy4/5	Control voltage for the transfer bias on paper with thickness 221 g/m^2 to 300 g/m^2
OHP	Control voltage for the transfer bias for transparencies
Bias	Transfer bias value

Setting: [Light/Normal1]

1. Select the item to be set.

Display	Description
1st	Control voltage for the transfer bias for the first side (full speed)
2nd	Control voltage for the transfer bias for the second side (full speed)
1st 3/4(Gloss)	Control voltage for the transfer bias for the first side at 3/4 times of line speed
2nd 3/4(Gloss)	Control voltage for the transfer bias for the second side at 3/4 times of line speed
1st B/W*	Control voltage for the transfer bias for the first side in black/white mode
2nd B/W*	Control voltage for the transfer bias for the second side in black/white mode

*: 55 ppm model only.

2. Select the paper width to be set.
3. Change the value using the +/- or numeric keys.

Item No.	Description
U106	

[1st]

Display	Description	Setting range	Initial setting			
			30ppm	35ppm	45ppm	55ppm
Width=105	105 mm wide	0 to 255	125	131	143	150
Width=210	210 mm wide	0 to 255	118	123	134	139
Width=297	297 mm wide	0 to 255	110	115	120	128

[2nd]

Display	Description	Setting range	Initial setting			
			30ppm	35ppm	45ppm	55ppm
Width=105	105 mm wide	0 to 255	167	180	207	220
Width=210	210 mm wide	0 to 255	133	140	155	163
Width=297	297 mm wide	0 to 255	112	116	124	128

[1st 3/4(Gloss)]

Display	Description	Setting range	Initial setting			
			30ppm	35ppm	45ppm	55ppm
Width=105	105 mm wide	0 to 255	120	120	131	131
Width=210	210 mm wide	0 to 255	114	114	123	123
Width=297	297 mm wide	0 to 255	111	111	120	120

[2nd 3/4(Gloss)]

Display	Description	Setting range	Initial setting			
			30ppm	35ppm	45ppm	55ppm
Width=105	105 mm wide	0 to 255	155	155	180	180
Width=210	210 mm wide	0 to 255	126	126	140	140
Width=297	297 mm wide	0 to 255	111	111	120	120

[1st B/W]

Display	Description	Setting range	Initial setting
			55ppm
Width=105	105 mm wide	0 to 255	150
Width=210	210 mm wide	0 to 255	144
Width=297	297 mm wide	0 to 255	128

[2nd B/W]

Display	Description	Setting range	Initial setting
			55ppm
Width=105	105 mm wide	0 to 255	183
Width=210	210 mm wide	0 to 255	171
Width=297	297 mm wide	0 to 255	128

4. Press the start key. The value is set.

Item No.	Description
U106	**Setting: [Normal2/3]**

1. Select the item to be set.

Display	Description
1st	Control voltage for the transfer bias for the first side (full speed)
2nd	Control voltage for the transfer bias for the second side (full speed)
1st 3/4(Gloss)	Control voltage for the transfer bias for the first side at 3/4 times of line speed
2nd 3/4(Gloss)	Control voltage for the transfer bias for the second side at 3/4 times of line speed
1st B/W*	Control voltage for the transfer bias for the first side in black/white mode
2nd B/W*	Control voltage for the transfer bias for the second side in black/white mode

*: 55 ppm model only.

2. Select the paper width to be set.
3. Change the value using the +/- or numeric keys.

[1st]

Display	Description	Setting range	Initial setting			
			30ppm	35ppm	45ppm	55ppm
Width=105	105 mm wide	0 to 255	125	131	143	150
Width=210	210 mm wide	0 to 255	118	123	134	139
Width=297	297 mm wide	0 to 255	110	115	120	128

[2nd]

Display	Description	Setting range	Initial setting			
			30ppm	35ppm	45ppm	55ppm
Width=105	105 mm wide	0 to 255	167	180	207	220
Width=210	210 mm wide	0 to 255	133	140	155	163
Width=297	297 mm wide	0 to 255	112	116	124	128

[1st 3/4(Gloss)]

Display	Description	Setting range	Initial setting			
			30ppm	35ppm	45ppm	55ppm
Width=105	105 mm wide	0 to 255	120	120	131	131
Width=210	210 mm wide	0 to 255	114	114	123	123
Width=297	297 mm wide	0 to 255	111	111	120	120

Item No.	Description
U106	

[2nd 3/4(Gloss)]

Display	Description	Setting range	Initial setting			
			30ppm	35ppm	45ppm	55ppm
Width=105	105 mm wide	0 to 255	155	155	180	180
Width=210	210 mm wide	0 to 255	126	126	140	140
Width=297	297 mm wide	0 to 255	111	111	120	120

[1st B/W]

Display	Description	Setting range	Initial setting
			55ppm
Width=105	105 mm wide	0 to 255	150
Width=210	210 mm wide	0 to 255	144
Width=297	297 mm wide	0 to 255	128

[2nd B/W]

Display	Description	Setting range	Initial setting
			55ppm
Width=105	105 mm wide	0 to 255	183
Width=210	210 mm wide	0 to 255	171
Width=297	297 mm wide	0 to 255	128

4. Press the start key. The value is set.

Setting: [Heavy1]

1. Select the item to be set.

Display	Description
1st 3/4	Control voltage for the transfer bias for the first side at 3/4 times of line speed
2nd 3/4	Control voltage for the transfer bias for the second side at 3/4 times of line speed

2. Select the paper width to be set.
3. Change the value using the +/- or numeric keys.l

[1st 3/4]

Display	Description	Setting range	Initial setting			
			30ppm	35ppm	45ppm	55ppm
Width=105	105 mm wide	0 to 255	121	121	133	133
Width=210	210 mm wide	0 to 255	118	118	129	129
Width=297	297 mm wide	0 to 255	115	115	124	124

Item No.	Description
U106	

[2nd 3/4]

Display	Description	Setting range	Initial setting			
			30ppm	35ppm	45ppm	55ppm
Width=105	105 mm wide	0 to 255	137	137	155	155
Width=210	210 mm wide	0 to 255	133	133	150	150
Width=297	297 mm wide	0 to 255	115	115	124	124

4. Press the start key. The value is set.

Setting: [Heavy2/3]

1. Select the item to be set.

Display	Description
1st Half	Control voltage for the transfer bias for the first side (half speed)
2nd Half	Control voltage for the transfer bias for the second side (half speed)

2. Select the paper width to be set.
3. Change the value using the +/- or numeric keys.l

[1st Half]

Display	Description	Setting range	Initial setting			
			30ppm	35ppm	45ppm	55ppm
Width=105	105 mm wide	0 to 255	114	118	126	130
Width=210	210 mm wide	0 to 255	111	115	123	127
Width=297	297 mm wide	0 to 255	109	112	119	122

[2nd Half]

Display	Description	Setting range	Initial setting			
			30ppm	35ppm	45ppm	55ppm
Width=105	105 mm wide	0 to 255	126	132	144	151
Width=210	210 mm wide	0 to 255	123	128	140	146
Width=297	297 mm wide	0 to 255	109	112	119	122

4. Press the start key. The value is set.

Setting: [Heavy4/5]

1. Select the item to be set.

Display	Description
1st Half	Control voltage for the transfer bias for the first side (half speed)
2nd Half	Control voltage for the transfer bias for the second side (half speed)

2. Select the paper width to be set.
3. Change the value using the +/- or numeric keys.l

Item No.	Description
U106	[1st Half]

Display	Description	Setting range	Initial setting			
			30ppm	35ppm	45ppm	55ppm
Width=105	105 mm wide	0 to 255	114	118	126	130
Width=210	210 mm wide	0 to 255	111	115	123	127
Width=297	297 mm wide	0 to 255	104	107	113	116

[2nd Half]

Display	Description	Setting range	Initial setting			
			30ppm	35ppm	45ppm	55ppm
Width=105	105 mm wide	0 to 255	126	132	144	151
Width=210	210 mm wide	0 to 255	123	128	140	146
Width=297	297 mm wide	0 to 255	104	107	113	116

Press the start key. The value is set.

Setting: [OHP]

1. Select the item to be set.
2. Change the value using the +/- or numeric keys.

Display	Description	Setting range	Initial setting			
			30ppm	35ppm	45ppm	55ppm
Width=105	105 mm wide	0 to 255	118	123	134	139
Width=210	210 mm wide	0 to 255	115	120	129	133
Width=297	297 mm wide	0 to 255	112	116	124	128

Press the start key. The value is set.

Item No.	Description
U106	**Setting: [Bias]** 1. Select the item to be set. 2. Change the value using the +/- or numeric keys.

Display	Description	Setting range	Initial setting			
			30ppm	35ppm	45ppm	55ppm
Reverse	Transfer reverse bias (full speed)	0 to 255	1	1	1	1
Reverse Half	Transfer reverse bias (half speed)	0 to 255	1	1	1	1
Reverse 3/4	Transfer reverse bias at 3/4 times of line speed	0 to 255	1	1	1	1
Reverse B/W*	Transfer reverse bias in black/white mode	0 to 255	-	-	-	1
Cleaning	Cleaning control value (full speed)	0 to 255	122	127	138	143
Cleaning Half	Cleaning control value (half speed)	0 to 255	114	118	126	130
Cleaning 3/4	Cleaning control value at 3/4 times of line speed	0 to 255	121	121	133	133

*: 55 ppm model only.

3. Press the start key. The value is set.

Supplement

While this maintenance item is being executed, copying from an original is available in interrupt copying mode (which is activated by pressing the system menu key).

Completion

Press the stop key. The screen for selecting a maintenance item No. is displayed.

Item No.	Description
U107	**Setting the transfer cleaning voltage**

Description
Sets the cleaning control voltage for transfer belt unit.
Purpose
Change settings if an offset has occurred due to the failure of cleaning the transfer belt.

Method
1. Press the start key.
2. Select the item to be set.

Display	Description
Belt(A)	Transfer belt cleaning voltage (printing)
Belt(B)	Transfer belt cleaning voltage (paper interval)

3. Select the item to be set.
4. Change the value using the +/- or numeric keys.l
   [Belt(A)]

Display	Description	Setting range	Initial setting			
			30ppm	35ppm	45ppm	55ppm
Full	Full speed	0 to 255	187	192	202	207
Half	Half speed	0 to 255	172	175	180	182
3/4	3/4 times of line speed	0 to 255	182	182	192	192
B/W*	Black/white mode	0 to 255	-	-	-	212

   [Belt(B)]

Display	Description	Setting range	Initial setting			
			30ppm	35ppm	45ppm	55ppm
Full	Full speed	0 to 255	120	130	150	160
Half	Half speed	0 to 255	100	100	110	110
3/4	3/4 times of line speed	0 to 255	110	110	130	130
B/W*	Black/white mode	0 to 255	-	-	-	160

   *: 55 ppm model only.
5. Press the start key. The value is set.

Supplement
While this maintenance item is being executed, copying from an original is available in interrupt copying mode (which is activated by pressing the system menu key).

Completion
Press the stop key. The screen for selecting a maintenance item No. is displayed.

Item No.	Description
U108	**Setting separation shift bias** **Description** Adjusts output of separation shift bias and ON/OFF timing. **Purpose** To set when the separated malfunction of the paper occurs. **Method** 1. Press the start key. 2. Select the item to be set.

Display	Description
Output	Adjusting the separation shift bias output
Output 3/4	Adjusting the separation shift bias output
Output B/W*	Adjusting the separation shift bias output in black/white mode
Timing	Adjusting the ON/OFF timing with paper position
Subtraction Value	Separation bias reduction settings (correction by fuser counts)

***: 55 ppm model only.**

Setting: [Output]

1. Select the item to be set.
2. Change the setting value using the +/- or numeric key.

Display	Description	Setting range	Initial setting
Light 1st	Separation shift bias for the first side on paper with thickness 52 to 64 g/m^2	0 to 255	55
Light 2nd	Separation shift bias for the second side on paper with thickness 52 to 64 g/m^2	0 to 255	55
Normal 1st	Separation shift bias for the first side on paper with thickness 65 to 75 g/m^2	0 to 255	55
Normal 2nd	Separation shift bias for the second side on paper with thickness 65 to 75 g/m^2	0 to 255	55
Add Normal Lead	Addition value for leading edge on paper with thickness 76 to 105 g/m^2	-127 to 127	0
Heavy/OHP	Separation shift bias for transparencies or paper with thickness 106 to 300 g/m^2	0 to 255	0

3. Press the start key. The value is set.

Item No.	Description
U108	

Setting: [Output 3/4 / Output B/W]

1. Select the item to be set.
2. Change the setting value using the +/- or numeric key.

Display	Description	Setting range	Initial setting	
			Output 3/4	Output B/W*
Light 1st	Separation shift bias for the first side on paper with thickness 52 to 64 g/m^2	0 to 255	55	55
Light 2nd	Separation shift bias for the second side on paper with thickness 52 to 64 g/m^2	0 to 255	55	55
Normal 1st	Separation shift bias for the first side on paper with thickness 65 to 75 g/m^2	0 to 255	55	55
Normal 2nd	Separation shift bias for the second side on paper with thickness 65 to 75 g/m^2	0 to 255	55	55

* : 55 ppm model only.

3. Press the start key. The value is set.

Setting: [Timing]

1. Select the item to be set.
2. Change the setting value using the +/- or numeric key.

Display	Description	Setting range	Initial setting
On Timing Lead	Separation shift bias ON timing at leading edge of paper	-200 to 200	0
On Timing Center	Separation shift bias ON timing at center of paper	-200 to 200	0
Off Timing	Separation shift bias OFF timing	-200 to 200	0

3. Press the start key. The value is set.

Supplement

While this maintenance item is being executed, copying from an original is available in interrupt copying mode (which is activated by pressing the system menu key).

Setting: [Subtraction Value]

1. Change the setting value using the +/- keys.

Display	Description	Setting range	Initial setting
Value	Subtraction for the paper separation bias	-127 to 127	-35

2. Press the start key. The value is set.

Completion

Press the stop key. The screen for selecting a maintenance item No. is displayed.

Item No.	Description
U110	**Checking the drum count** **Description** Displays the drum counts for checking. **Purpose** To check the drum status. **Method** 1. Press the start key. The current drum counts is displayed. **Completion** Press the stop key. The screen for selecting a maintenance item No. is displayed.
U111	**Checking the drum drive time** **Description** Displays the drum drive time for checking a figure, which is used as a reference when correcting the high voltage based on time. **Purpose** To check the drum status. **Method** 1. Press the start key. The drum drive time is displayed. **Completion** Press the stop key. The screen for selecting a maintenance item No. is displayed.

Display	Description
C	Drum count value for cyan
M	Drum count value for magenta
Y	Drum count value for yellow
K	Drum count value for black

Display	Description
C	Drum drive time for cyan
M	Drum drive time for magenta
Y	Drum drive time for yellow
K	Drum drive time for black

<table>
<tr><th>Item No.</th><th>Description</th></tr>
<tr><td>U117</td><td>

Checking the drum number

Description
Displays the drum number.
Purpose
To check the drum number.

Method
1. Press the start key. The drum number is displayed.

<table>
<tr><th>Display</th><th>Description</th></tr>
<tr><td>C</td><td>Cyan drum number</td></tr>
<tr><td>M</td><td>Magenta drum number</td></tr>
<tr><td>Y</td><td>Yellow drum number</td></tr>
<tr><td>K</td><td>Black drum number</td></tr>
</table>

Completion
Press the stop key. The screen for selecting a maintenance item No. is displayed.

</td></tr>
<tr><td>U118</td><td>

Displaying the drum history

Description
Displays the past record of machine number and the drum counter.
Purpose
To check the count value of machine number and the drum counter.

Method
1. Press the start key.
2. Select the color to check.

<table>
<tr><th>Display</th><th>Description</th></tr>
<tr><td>C</td><td>Cyan drum past record</td></tr>
<tr><td>M</td><td>Magenta drum past record</td></tr>
<tr><td>Y</td><td>Yellow drum past record</td></tr>
<tr><td>K</td><td>Black drum past record</td></tr>
</table>

The history of a machine number and a drum counter for each color is displayed by three cases.

<table>
<tr><th>Display</th><th>Description</th></tr>
<tr><td>Machine History1 - 3</td><td>Historical records of the machine number</td></tr>
<tr><td>Cnt History1 - 3</td><td>Historical records of drum counter</td></tr>
</table>

Completion
Press the stop key. The screen for selecting a maintenance item No. is displayed.

</td></tr>
</table>

<table>
<tr><th>Item No.</th><th>Description</th></tr>
<tr><td>U119</td><td>

Setting the drum

Description
Sets drum sensitivity.
Purpose
To set the drum after replacing the drum unit or laser scanner unit.
When completed, perform maintenance mode U464, Calibration.

Method
1. Press the start key.
2. Select [Execute].
3. Press the start key. Drum setup is commenced.
4. Turn the main power switch off and on. Allow more than 5 seconds between Off and On.

</td></tr>
<tr><td>U122</td><td>

Checking the transfer belt unit number

Description
Displays the number of the transfer belt unit for checking.
Purpose
To check the number of the transfer belt.

Method
1. Press the start key.
   The current number of the transfer belt is displayed.

Completion
Press the stop key. The screen for selecting a maintenance item No. is displayed.

</td></tr>
<tr><td>U123</td><td>

Displaying the transfer belt unit history

Description
Displays the past record of machine number and the transfer belt unit counter.
Purpose
To check the count value of machine number and the transfer counter.

Method
1. Press the start key.
   The history of a machine number and a transfer belt unit counter for each color is displayed by three cases.

<table>
<tr><th>Display</th><th>Description</th></tr>
<tr><td>Machine History1 - 3</td><td>Historical records of the machine number</td></tr>
<tr><td>Cnt History1 - 3</td><td>Historical records of transfer belt unit counter</td></tr>
</table>

Completion
Press the stop key. The screen for selecting a maintenance item No. is displayed.

</td></tr>
</table>

Item No.	Description
U127	**Checking/clearing the transfer count** **Description** Displays and clears the counts of the transfer counter. **Purpose** To check the count or drive time after replacement of the transfer belt unit or transfer roller. Also to clear the counts after replacing transfer roller. **Method** 1. Press the start key. The current counts of the transfer counter is displayed. **Clearing** 1. Select [Clear]. 2. Press the start key. The counter value is cleared. Clears only the transfer roller. The transfer belt unit is not cleared. **Completion** Press the stop key. The screen for selecting a maintenance item No. is displayed.

Display	Description
Mid Trans(Cnt)	Transfer belt unit count value
2nd Trans(Cnt)	Transfer roller count value
Clear	All transfer count clear

Item No.	Description
U128	**Setting transfer high-voltage timing** **Description** Adjusts the ON/OFF timing of transfer high-voltage output. **Purpose** Basically, the setting need not be changed. If any problem such as faulty images or dirt on the back surface occurs, change the setting. **Method** 1. Press the start key. 2. Select the item to set. 3. Change the value using the +/- keys or numeric keys. 4. Press the start key. The value is set. **Completion** Press the stop key. The screen for selecting a maintenance item No. is displayed.

Display	Description	Setting range	Initial setting			
			30ppm	35ppm	45ppm	55ppm
On Timing 1st	Transfer ON timing adjustment value (first side)	-200 to 200	-5	-5	-5	-5
On Timing 2nd	Transfer ON timing adjustment value (second side)	-200 to 200	0	0	0	0
Off Timing	Transfer OFF timing adjustment value	-200 to 200	20	16	13	10

Item No.	Description
U130	**Initial setting for the developer** **Description** The toner sensor control bias is adjusted so that the sensor output is set as the target value with the initial developer. **Purpose** Automatically executed when the developer unit loaded with the initial developer is replaced. **Method** 1. Press the start key. 2. Select [Execute]. 3. Press the start key. Toner installation is started and the control value of the toner sensor is displayed. **Completion** Press the stop key. The screen for selecting a maintenance item No. is displayed.

Display	Description
C	Toner sensor C control voltage
M	Toner sensor M control voltage
Y	Toner sensor Y control voltage
K	Toner sensor K control voltage
Execute	Execute

Item No.	Description
U131	**Adjusting the toner sensor control voltage**

Description
Adjusts the toner sensor control voltage.
Purpose
If control values are not correctly retrievable due to the EEPROM of the developer unit failure, etc., use manual adjustment and obtain a temporary control value.

Method
1. Press the start key.
2. Select the item to be set or displayed.

Display	Description
Manual	Toner sensor control voltage manual adjustment
Auto	Toner sensor control voltage auto adjustment
Mode	Switching the manual adjustment and auto adjustment

Setting: [Manual]
1. Select the item to be set.
2. Change the value using the +/- or numeric keys.

Display	Description	Setting range	Initial setting
Control(C)	Toner sensor C control voltage	0 to 255	150
Control(M)	Toner sensor M control voltage	0 to 255	150
Control(Y)	Toner sensor Y control voltage	0 to 255	150
Control(K)	Toner sensor K control voltage	0 to 255	150

3. Press the start key. The value is set.

Displaying: [Auto]
1. The current setting is displayed.

Display	Description
Default(C)	Reference value for toner sensor C control voltage
Default(M)	Reference value for toner sensor M control voltage
Default(Y)	Reference value for toner sensor Y control voltage
Default(K)	Reference value for toner sensor K control voltage
Control(C)	Toner sensor C control voltage after correction
Control(M)	Toner sensor M control voltage after correction
Control(Y)	Toner sensor Y control voltage after correction
Control(K)	Toner sensor K control voltage after correction

<table>
<tr><th>Item No.</th><th>Description</th></tr>
<tr><td>U131</td><td>
Setting: [Mode]
1. Select the item to be set.
<table>
<tr><th>Display</th><th>Description</th></tr>
<tr><td>Manual</td><td>Toner sensor control voltage manual adjustment</td></tr>
<tr><td>Auto</td><td>Toner sensor control voltage auto adjustment</td></tr>
</table>
Initial setting: Auto
2. Press the start key. The value is set.

Completion
Press the stop key. The screen for selecting a maintenance item No. is displayed.
</td></tr>
<tr><td>U132</td><td>
Replenishing toner forcibly

Description
Replenishes toner forcibly until the toner sensor output value reaches the toner feed start level.
Purpose
Used when the toner empty is detected frequently.

Method
1. Press the start key.
2. Select [Execute].
3. Press the start key.
Toner is replenished until the toner sensor output value reaches the toner feed start level.
<table>
<tr><th>Display</th><th>Description</th></tr>
<tr><td>Supply(C)</td><td>Toner feed start level (cyan)</td></tr>
<tr><td>Supply(M)</td><td>Toner feed start level (magenta)</td></tr>
<tr><td>Supply(Y)</td><td>Toner feed start level (yellow)</td></tr>
<tr><td>Supply(K)</td><td>Toner feed start level (black)</td></tr>
<tr><td>Sensor(C)</td><td>Toner sensor output value (cyan)</td></tr>
<tr><td>Sensor(M)</td><td>Toner sensor output value (magenta)</td></tr>
<tr><td>Sensor(Y)</td><td>Toner sensor output value (yellow)</td></tr>
<tr><td>Sensor(K)</td><td>Toner sensor output value (black)</td></tr>
<tr><td>Execute</td><td>Execute</td></tr>
</table>
4. To stop operation, press the stop key.

Completion
Press the stop key. The screen for selecting a maintenance item No. is displayed.
</td></tr>
</table>

<table>
<tr><th>Item No.</th><th>Description</th></tr>
<tr><td>U135</td><td>

Checking toner motor operation

Description
Drives toner motors.
Purpose
To check the operation of toner motors.

Remarks
When driving the toner motors long time or several times, developer section becomes the toner full and is locked.

Method
1. Press the start key.
2. Select [Toner].
3. Press the start key. The operation starts.

<table>
<tr><th>Display</th><th>Description</th></tr>
<tr><td>Toner</td><td>Toner motor (TM) is turned on</td></tr>
</table>

4. To stop the operation, press the stop key.

Completion
Press the stop key after operation stops. The screen for selecting a maintenance item No. is displayed.

</td></tr>
<tr><td>U136</td><td>

Setting toner near end detection

Description
Sets the level that indicates the number of sheets that can be printed from occurrence of toner near end to toner empty.
Purpose
To change the setting to advance detection of near end if the interval from toner near end to toner empty seems too short.

Setting
1. Press the start key.
2. Select the item to be set.
3. Change the value using the +/- or numeric keys.

<table>
<tr><th>Display</th><th>Description</th><th>Setting range</th><th>Initial setting</th></tr>
<tr><td>CMY</td><td>Setting the level of cyan/magenta/yellow toner</td><td>0 to 9</td><td>3</td></tr>
<tr><td>K</td><td>Setting the level of black toner</td><td>0 to 9</td><td>3</td></tr>
</table>

Increasing the setting makes the interval from toner near end to toner empty longer.
Decreasing the setting makes the interval from toner near end to toner empty shorter.
If 0 is set, toner near end will not be detected.
* : Inch model (except for PH model) initial setting: 0

4. Press the start key. The value is set.

Completion
Press the stop key. The screen for selecting a maintenance item No. is displayed.

</td></tr>
</table>

Item No.	Description
U139	**Displaying the temperature and humidity outside the machine** **Description** Displays the detected temperature and humidity outside the machine. **Purpose** To check the temperature and humidity outside the machine. **Method** 1. Press the start key. 2. Select the item. **Method: [Ext/Int]** 1. The current temperature and humidity are displayed. **Method: [LSU]** 1. The current temperature is displayed. **Method: [Developing]** 1. The current temperature is displayed. **Completion** Press the stop key. The screen for selecting a maintenance item No. is displayed.

Display	Description
Ext/Int	Internal/External temperature (°C), External humidity (%)
LSU	Internal temperature around the laser scanner unit (°C)
Developing	Internal temperature around the developer section (°C)

Display	Description
External Temp	External temperature (°C)
External Humidity	External humidity (%)
Internal Temp	Internal temperature (°C)

Display	Description
C	Internal temperature around the laser scanner unit C (°C)
M	Internal temperature around the laser scanner unit M (°C)
Y	Internal temperature around the laser scanner unit Y (°C)
K	Internal temperature around the laser scanner unit K (°C)

Display	Description
C	Internal temperature around the developer unit C (°C)
M	Internal temperature around the developer unit M (°C)
Y	Internal temperature around the developer unit Y (°C)
K	Internal temperature around the developer unit K (°C)

Item No.	Description
U140	**Displaying developer bias**

Description
Displays and changes various developer bias value.
Purpose
To check or changes the developer bias value.

Method
1. Press the start key.
2. Select the item to be set.

Display	Description
Sleeve DC	Developer sleeve roller DC bias
Sleeve AC	Developer sleeve roller AC bias
Mag DC	Developer magnet roller DC bias
Mag AC	Developer magnet roller AC bias
Sleeve Freq	Developer sleeve roller frequency
Sleeve Duty	Developer sleeve roller duty
Mag Duty	Developer magnet roller duty
AC Calib	Executing or setting the AC calibration
Image Preference	Toner density setting

Setting: [Sleeve DC]
1. Select the item to be set.
2. Change the setting value using the +/- keys or numeric keys.

Display	Description	Setting range	Initial setting			
			30ppm	35ppm	45ppm	55ppm
C	Developer sleeve roller DC bias for cyan	0 to 255	72	72	84	84
M	Developer sleeve roller DC bias for magenta	0 to 255	72	72	84	84
Y	Developer sleeve roller DC bias for yellow	0 to 255	72	72	84	84
K	Developer sleeve roller DC bias for black	0 to 255	62	62	70	70
B/W*	Developer sleeve roller DC bias in black/white mode	0 to 255	-	-	-	70

*: 55 ppm model only.

3. Press the start key. The value is set.

Item No.	Description
U140	

Setting: [Sleeve AC]

1. Select the item to be set.
2. Change the setting value using the +/- keys or numeric keys.

Display	Description	Setting range	Initial setting			
			30ppm	35ppm	45ppm	55ppm
C	Developer sleeve roller AC bias for cyan	0 to 255	175	175	155	155
M	Developer sleeve roller AC bias for magenta	0 to 255	175	175	155	155
Y	Developer sleeve roller AC bias for yellow	0 to 255	175	175	155	155
K	Developer sleeve roller AC bias for black	0 to 255	175	175	155	155
B/W*	Developer sleeve roller AC bias in black/white mode	0 to 255	-	-	-	155

*: 55 ppm model only.

3. Press the start key. The value is set.

Setting: [Mag DC]

1. Select the item to be set.
2. Change the setting value using the +/- keys or numeric keys.

Display	Description	Setting range	Initial setting			
			30ppm	35ppm	45ppm	55ppm
C	Developer magnet roller DC bias for cyan	0 to 255	130	130	155	155
M	Developer magnet roller DC bias for magenta	0 to 255	130	130	155	155
Y	Developer magnet roller DC bias for yellow	0 to 255	130	130	155	155
K	Developer magnet roller DC bias for black	0 to 255	130	130	155	155
B/W*	Developer magnet roller DC bias in black/white mode	0 to 255	-	-	-	155

*: 55 ppm model only.

3. Press the start key. The value is set.

Item No.	Description
U140	

Setting: [Mag AC]

1. Select the item to be set.
2. Change the setting value using the +/- keys or numeric keys.

Display	Description	Setting range	Initial setting			
			30ppm	35ppm	45ppm	55ppm
C	Developer magnet roller AC bias for cyan	0 to 255	101	101	200	200
M	Developer magnet roller AC bias for magenta	0 to 255	101	101	200	200
Y	Developer magnet roller AC bias for yellow	0 to 255	101	101	200	200
K	Developer magnet roller AC bias for black	0 to 255	101	101	160	160
B/W*	Developer magnet roller AC bias in black/white mode	0 to 255	-	-	-	160

*: 55 ppm model only.

3. Press the start key. The value is set.

Setting: [Sleeve Freq]

1. Select the item to be set.
2. Change the setting value using the +/- keys or numeric keys.

Display	Description	Setting range	Initial setting			
			30ppm	35ppm	45ppm	55ppm
Normal	Developer sleeve roller frequency	0 to 6200	5221	5345	5345	5511
B/W*	Developer sleeve roller frequency in black/white mode	0 to 6200	-	-	-	5345
Half	Developer sleeve roller frequency (half speed)	0 to 6200	5345	5345	5345	5345
3/4*	Developer sleeve roller frequency at 3/4 times of line speed	0 to 6200	5345	5345	5345	5345

*: 55 ppm model only.

3. Press the start key. The value is set.

Setting: [Sleeve Duty]

1. Select the item to be set.
2. Change the setting value using the +/- keys or numeric keys.

Display	Description	Setting range	Initial setting			
			30ppm	35ppm	45ppm	55ppm
Normal	Developer sleeve roller duty	0 to 99	63	63	43	43
B/W*	Developer sleeve roller duty in black/white mode	0 to 99	-	-	-	43

*: 55 ppm model only.

3. Press the start key. The value is set.

Item No.	Description
U140	**Setting: [Mag Duty]** 1. Select the item to be set. 2. Change the setting value using the +/- keys or numeric keys.

Display	Description	Setting range	Initial setting			
			30ppm	35ppm	45ppm	55ppm
Normal	Developer magnet roller duty	0 to 99	37	37	68	68
B/W*	Developer magnet roller duty in black/white mode	0 to 99	-	-	-	68

*: 55 ppm model only.

3. Press the start key. The value is set.

Method: [AC Calib](45 ppm model/ 55 ppm model)

1. Select the item.

Display	Description
Calibration	Executing the AC calibration (Developer AC calibration setting) **Executing timing** 1. When the setup at high altitude place. 2. Execute when replacing the developer unit or drum unit 3. Execute at the time of developing leak outbreak 4. When the density of solid image is dropped after the AC calibration.
Magnification	AC calibration target bias value setting **Executing timing** 1. Developing bias setting when developing leak occurs after AC calibration practice
High Altitude	Mode setting for AC calibration bias control **Executing timing** 1. In case the density of solid image levels drop is not improved even if execute AC calibration (setting at high altitude)

Method: [Calibration](45 ppm model/ 55 ppm model)

1. Switch the developer On in order to execute AC calibration.

Display	Description
C	Change On/Off of Cyan developer
M	Change On/Off of Magenta developer
Y	Change On/Off of Yellow developer
K	Change On/Off of Black developer
Type	High altitude grain mode setting
Execute	Executing the Calibration

* : When the density of solid image is dropped, select "Type" and chose "+1". (High altitude grain mode)

2. Select [Execute].
3. Press the start key. AC calibration is executed.
4. Turn the main power switch off and on. Allow more than 5 seconds between Off and On.

* : When an error occurs, an error code is displayed.

Item No.	Description
U140	

Setting: [Type]

1. Change the setting value using the +/- keys or numeric keys.

Display	Description
0	Continue the present setting and execute AC calibration
+1	Set high altitude grain mode On and execute AC calibration
+2	Cancel high altitude grain mode setting and execute AC calibration

* : High altitude grain mode: Perform AC calibration in a high altitude installation and improve that image density becomes lighter.

The following are automatically changed if "+1" is set up in the Type.
If current setting is [Normal2] or [Normal3] which is changed to [Normal1]
The U161 [Grain Mode] is set to [Mode2]

2. Select [Execute].
3. Press the start key.

Setting: [Magnification]

1. Select the item to be set.
2. Change the setting value using the +/- keys or numeric keys.

Display	Description	Setting range	Initial setting
C	Set it at the time of Cyan developing leak outbreak	-10 to 15	15
M	Set it at the time of Magenta developing leak outbreak	-10 to 15	15
Y	Set it at the time of Yellow developing leak outbreak	-10 to 15	15
K	Set it at the time of Black developing leak outbreak	-10 to1 5	12

3. Press the start key. The value is set.

Method: [High Altitude](45 ppm model/ 55 ppm model)

1. Select Mode1 or Mode2.

Display	Description
Mode1	Execute AC calibration by normal bias control
Mode2	If print density is low in an installation at high altitude, execute calibration by fixing the bias potential.

Initial setting: Mode1

2. Press the start key. The value is set.
3. Turn the main power switch off and on. Allow more than 5 seconds between Off and On.

Item No.	Description
U140	

Method: [AC Calib] (30 ppm model/ 35 ppm model)

1. Select the item.

Display	Description
High Altitude	Mode setting for AC calibration bias control

Method: [High Altitude] (30 ppm model/ 35 ppm model)

1. Select mode.

Display	Description	Display	Description
Default	Initial setting	3000m	Settings equivalent to the altitude of 3000 m.
1000m	Settings equivalent to the altitude of 1000 m.	4000m	Settings equivalent to the altitude of 4000 m.
2000m	Settings equivalent to the altitude of 2000 m.		

2. Press the start key. The value is set.

Method: [Image Preference]

1. Select the Copy.
2. Change the value using the +/- or numeric keys.

Display	Description	Setting range	Initial setting
Copy	Setting toner density at copying	-1 to +1	0

1: Low 0: Normal +1: Deep

3. Press the start key. The value is set.

Completion

Press the stop key. The screen for selecting a maintenance item No. is displayed.

Item No.	Description
U147	**Setting for toner applying operation**

Description
Sets the mode for removing charged toner in the developing unit (T7 control: Toner applying operation). Defines the action that the toner accumulated on the developer blade is sent back in the developer unit (done by the vibration motor).

Purpose
The setting can be changed to reduce the toner applying quantity. Performed to change the occurrence of the control of the vibration motor.
If the charged toner stays inside the developing unit, density decreases.

Method
1. Press the start key.
2. Select the item to be set.

Display	Description
Mode	Settings for toner applying operation
Upper Limit	Upper limit printing ratio of toner applying quantity with each mode
Minimum	Toner layer width when cleaning mode is selected
Interval Number	Setting the vibration motor On timing

Setting: [Mode]
1. Select the mode.

Display	Description
Mode0	Less consumption of toner than a regular toner applying operation
Mode1	Executes toner applying with the regular amount of toner

Initial setting; Mode1
2. Press the start key. The setting is set.

Setting: [Upper Limit]
1. Change the setting value using the +/- keys or numeric keys.

Display	Description	Setting range	Initial setting
Value	Upper limit printing ratio of toner applying quantity with each mode (%)	0 to 2.0	2.0

2. Press the start key. The value is set.

Setting: [Minimum]
1. Change the setting value using the +/- keys or numeric keys.

Display	Description	Setting range	Initial setting
Value	Toner layer width when cleaning mode is selected (mm)	0 to 30	10

2. Press the start key. The value is set.

<table>
<tr><th>Item No.</th><th>Description</th></tr>
<tr><td>U147</td><td>

Setting: [Interval Number]

1. Select the item to be set.
2. Change the setting value using the +/- keys or numeric keys.

Display	Description	Setting range	Initial setting
Print(Normal)	During continuous printing (Normal environment)	10 to 500	250
Print(H/H)	During continuous printing (High humidity environment)	10 to 200	100
Print End	Print completed	10 to 100	50

3. Press the start key. The value is set.

Completion

Press the stop key. The screen for selecting a maintenance item No. is displayed.

</td></tr>
<tr><td>U148</td><td>

Setting drum refresh mode

Description

Selects the mode used in drum refreshing

Purpose

Change settings when drum refreshing is too frequently executed.

Setting

1. Press the start key.
2. Select the mode.

Display	Description	Setting range	Initial setting
Normal*1	Automatic drum refreshing setting	0 to 3	2
Dew Condensation*2	Dew condensation drum refreshing setting	0 to 3	0

* 1: 0: Off / 1: Short / 2: Standard / 3: Long

*2 : 0:Mode0/ 1:Mode1/ 2:Mode2/ 3:Mode3

Larger the number, more the times of the refresh.

3. Press the start key. The setting is set.

Completion

Press the stop key. The screen for selecting a maintenance item No. is displayed.

</td></tr>
</table>

Item No.	Description
U155	**Checking sensors for toner** **Description** Displays the toner sensor output value. **Purpose** To check the output value for each color when any image problems occur. **Method** 1. Press the start key. 2. Select the item to be display.

Display	Description
Waste Toner	Control voltage value of the waste toner sensor
Toner	Control voltage value and replenishment level of toner sensor each color

Method: [Waste Toner]

1. Check the status of sensor. The current value is displayed.

Display	Description
Full	Waste toner sensor 1 (WTS1)
Near Full	Waste toner sensor 2 (WTS2)

Method: [Toner]

1. Check the status of sensor. The current value is displayed.

Display	Description
Sensor(C)	Toner sensor C output value
Sensor(M)	Toner sensor M output value
Sensor(Y)	Toner sensor Y output value
Sensor(K)	Toner sensor K output value
Supply(C)	Toner replenishment level for cyan
Supply(M)	Toner replenishment level for magenta
Supply(Y)	Toner replenishment level for yellow
Supply(K)	Toner replenishment level for black

Completion

Press the stop key. The screen for selecting a maintenance item No. is displayed.

Item No.	Description
U156	**Setting the toner replenishment level**

Description
Sets the toner replenishment level for each color.
Purpose
To change settings according to the original image.

Method
1. Press the start key.
2. Select the item to be set.

Display	Description
Supply	Setting the toner replenishment level
Empty	Setting the toner empty level

Method: [Supply]
1. Select the item to be set.
2. Change the setting value using the +/- or numeric keys.
   Increasing the setting makes the image lighter; decreasing it makes the image darker.

Display	Description	Setting range	Initial setting
C	Toner replenishment level for cyan	0 to 900	512
M	Toner replenishment level for magenta	0 to 900	512
Y	Toner replenishment level for yellow	0 to 900	512
K	Toner replenishment level for black	0 to 900	512
B/W*	Toner replenishment level in black/white mode	0 to 900	512

*: 55 ppm model only.
3. Press the start key. The value is set.

Method: [Empty]
1. Select the item to be set.
2. Change the setting value using the +/- or numeric keys.
   Increasing the setting makes ‘toner empty’ appear later and decreasing it makes ‘toner empty’ appear earlier.

Display	Description	Setting range	Initial setting
C	Toner empty level for cyan	0 to 1023	100
M	Toner empty level for magenta	0 to 1023	100
Y	Toner empty level for yellow	0 to 1023	100
K	Toner empty level for black	0 to 1023	100
B/W*	Toner empty level in black/white mode	0 to 1023	100

*: 55 ppm model only.
3. Press the start key. The value is set.

Completion
Press the stop key. The screen for selecting a maintenance item No. is displayed.

Item No.	Description
U157	**Checking the developer drive time** **Description** Displays the developer drive time for checking a figure, which is used as a reference when correcting the toner control. **Purpose** To check the developer drive time after replacing the developer unit. **Method** 1. Press the start key. The developer drive time is displayed. **Completion** Press the stop key. The screen for selecting a maintenance item No. is displayed.
U158	**Checking the developer count** **Description** Displays the developer count for checking. **Purpose** To check the developer unit status. **Method** 1. Press the start key. The current developer counts is displayed. **Completion** Press the stop key. The screen for selecting a maintenance item No. is displayed.

Display	Description
C	Developer drive time for cyan
M	Developer drive time for magenta
Y	Developer drive time for yellow
K	Developer drive time for black

Display	Description
C	Developer count value for cyan
M	Developer count value for magenta
Y	Developer count value for yellow
K	Developer count value for black

Item No.	Description
U161	**Setting the fuser control temperature**

Description
Changes the fuser control temperature.
Purpose
Normally no change is necessary. However, can be used to prevent curling or creasing of paper, or solve a fuser problem on thick paper.

Method
1. Press the start key.
2. Select the item to be set.

Display	Description
Warm Up	Control temperature except at printing
Print	Control temperature during printing
Low Power Mode*	Heating power reduction control
Grain Mode	Control for the impalpable uneveness in glossiness
Ready Time Adjust	Setting the Temperature to Activate Aging

*: 45/55 ppm model only.

Setting: [Warm Up]
1. Select the item to be set.
2. Change the setting value using the +/- keys.

Display	Description	Setting range	Initial setting			
			30ppm	35ppm	45ppm	55ppm
Ready (Center)	Control temperature at displaying Ready (Center)	130 to 200 (°C)	155	160	165	170
Ready (Edge)	Control temperature at displaying Ready (Edge)	100 to 200 (°C)	110	110	140	145
Ready (Press)	Control temperature at displaying Ready (Press)	0 to 200 (°C)	40	40	80	80
Drive (Center)	Stable temperature during driving (Center)	130 to 200 (°C)	165	170	170	175
Wait (Center)	Stable temperature during halt (Center)	130 to 200 (°C)	155	165	165	175
Low Power (Press)	Control temperature at low power consumption (Press)	0 to 200 (°C)	150	150	150	150
Full Speed Shift(Center)	Full speed shift temperature (Center)	0 to 200 (°C)	50	50	50	50
Pressure (Press)	Pressurizing beginning temperature (Press)	0 to 200 (°C)	120	120	155	160

3. Press the start key. The value is set.

Item No.	Description
U161	

Setting: [Print]

1. Select the item to be set.
2. Change the setting value using the +/- keys.

Display	Description	Setting range	Initial setting			
			30ppm	35ppm	45ppm	55ppm
Full Speed Print(Center)	Temperature at maximum print speed (Center)	130 to 200 (°C)	165	170	170	175
Duplex Shift (Center)	Temperature at duplex printing (Center)	-20 to 20 (°C)	5	5	5	5

3. Press the start key. The value is set.

Setting: [Low Power Mode]

1. Select the item to be set.

Display	Description
Mode0	Present state control mode (Usually not used)
Mode1	Fuser control temperature reduction mode (For normal users)
Mode2	Large volume output mode (For users who repeatedly print approximately 1500 sheets at a time)

Initial setting: Mode0

2. Press the start key. The setting is set.

Setting: [Grain Mode]

1. Select the item to be set.

Display	Description
Mode0	Current level. Special control is not performed
Mode1	Improvement mode for the impalpable uneveness in glossiness
Mode2	More improvement

Initial setting: Mode0

2. Press the start key. The setting is set.

Setting: [Ready Time Adjust]

1. Change the setting value using the +/- or numeric keys.

Display	Description	Setting range	Initial setting
Value	Compensating Values for the Activating Temperature for Low-temperature Aging: (α)	0 to 5	5

2. Press the start key. The setting is set.

* : Reducing the alpha value lowers the temperature at which aging is activated following the quiet mode has been stable.

* : Lowering the alpha value could deteriorate the fuser performance due to aging would not be activated during quiet mode.

<table>
<tr><th>Item No.</th><th>Description</th></tr>
<tr><td>U161</td><td>
<table>
<tr><th>Temperature to Activate Aging</th><td>Less than 13+α°C</td><td>Less than 21°C</td><td>21°C or more</td></tr>
<tr><td>Time for Low-temperature Aging</td><td>30 sec</td><td>0 sec</td><td>0 sec</td></tr>
</table>

Completion
Press the stop key. The screen for selecting a maintenance item No. is displayed.
</td></tr>
<tr><td>U167</td><td>
Checking/clearing the fuser count

Description
Displays and clears the fuser count for checking.
Purpose
To check the fuser count or drive time after replacement of the fuser unit. Also to clear the counts after replacing unit.

Method
1. Press the start key. The fuser count is displayed.
<table>
<tr><th>Display</th><th>Description</th></tr>
<tr><td>Cnt</td><td>Fuser unit count value</td></tr>
<tr><td>Release(Time)</td><td>Fuser unit drive time (release)</td></tr>
<tr><td>Press(Time)</td><td>Fuser unit drive time (press)</td></tr>
<tr><td>Clear</td><td>Clearing the Fuser unit count</td></tr>
</table>

Clearing
1. Press [Clear].
2. Press the start key. The count is cleared.

Completion
Press the stop key. The screen for selecting a maintenance item No. is displayed.
</td></tr>
</table>

Item No.	Description
U169	**Checking/setting the fuser power source** **Description** Displays and settings the reference voltage of the fuser IH PWB. **Purpose** To check the reference voltage. * : When U021 is being executed, set the same voltage with the voltage of the IH control PWB. **Method** 1. Press the start key. 2. Select the item to be set. **Display** / **Description** Set Fuser / Destination setting for Fuser **Setting: [Set Fuser]** **Display** / **Description** / **Setting range** Mode / Reference voltage / 1 to 4 1: 100 V specifications 2: 200 V specifications 3: 120 V specifications 4: 110 V specifications 3. Press the start key. The setting is set. **Completion** Press the stop key. The screen for selecting a maintenance item No. is displayed.

<table>
<tr><th>Item No.</th><th>Description</th></tr>
<tr><td>U199</td><td>

Displaying fuser heater temperature

Description
Displays the detected fuser temperature.
Purpose
To check the fuser temperature.

Method
1. Press the start key. The fuser temperature is displayed.

<table>
<tr><th>Display</th><th>Description</th></tr>
<tr><td>Heat Roller Edge1</td><td>Heat roller edge temperature (°C)</td></tr>
<tr><td>Heat Roller Edge2</td><td>Heat roller edge temperature (°C)</td></tr>
<tr><td>Heat Roller Center</td><td>Heat roller center temperature (°C)</td></tr>
<tr><td>Press Roller Center</td><td>Press roller center temperature (°C)</td></tr>
</table>

Completion
Press the stop key. The screen for selecting a maintenance mode No. is displayed.

</td></tr>
<tr><td>U200</td><td>

Turning all LEDs on

Description
Turn all the LEDs on the operation panel on.
Purpose
To check if all the LEDs on the operation panel light.

Method
1. Press the start key.
2. Select [Execute].
3. Press the start key.All the LEDs on the operation panel light.
4. Press the stop key. The LEDs Turn off.

Completion
Press the stop key. The screen for selecting a maintenance item No. is displayed.

</td></tr>
</table>

Item No.	Description
U201	**Initializing the touch panel** **Description** Adjust touch panel detecting positions. **Purpose** When the panel PWB or the operation panel is replaced or if the detecting positions are not aligned, perform this simulation to correct and confirm. **Method** 1. Press the start key. 2. Select the [Initialize] or [Check].

Display	Description
Initialize	Execute the correction of the touch panel display position.
Check	Confirm the display position of touch panel.

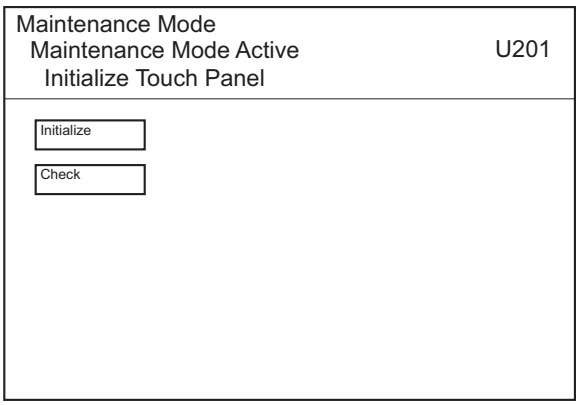

Figure 1-3-18

Method: [Initialize]
1. Press the start key.
2. Tap the center of the + sign.
3. Press the center of the [+] key displayed next.
   * : Press it using a tool with a fine tip.

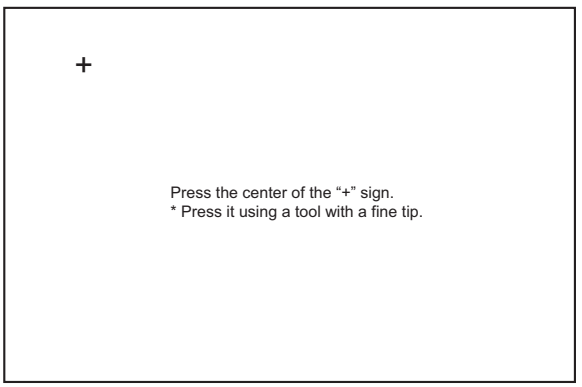

Figure 1-3-19

Item No.	Description
U201	]

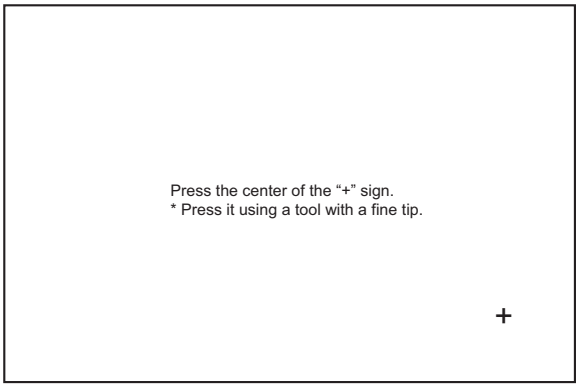

Figure 1-3-20

4. If two “ ◉ ” signs appear, press the both points at the same time.
   * : While pressing down one of " ◉ " sign, press the other " ◉ " sign. Setting values are obtained at the time when two " ◉ " signs are pressed at the same time.
   * : Press with the tip of your fingers (Not your fingernails).

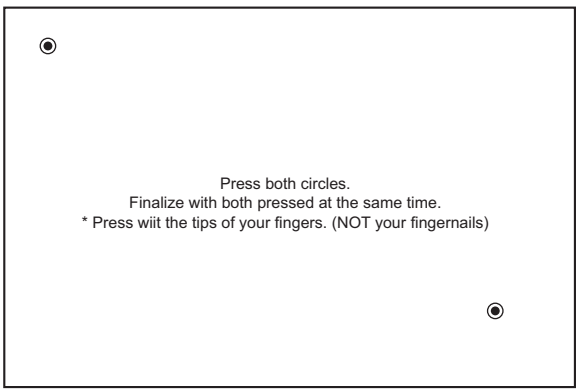

Figure 1-3-21

5. Press the center of two " ◉ " signs displayed next at the same time.

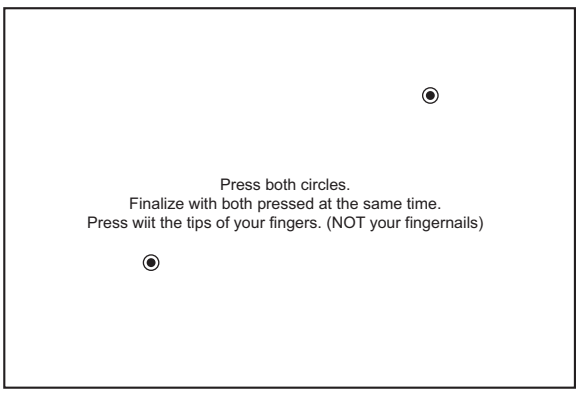

Figure 1-3-22

Item No.	Description
U201	6. Press the center of "+" sign displayed, as step 2 7. Repeat three times. 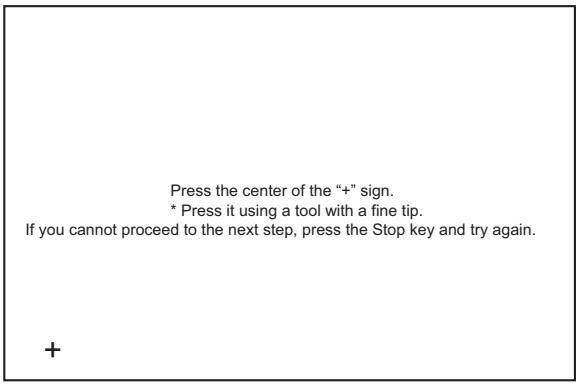 **Figure 1-3-23** 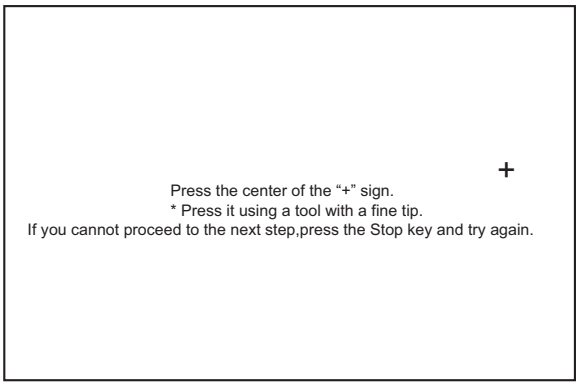 **Figure 1-3-24** 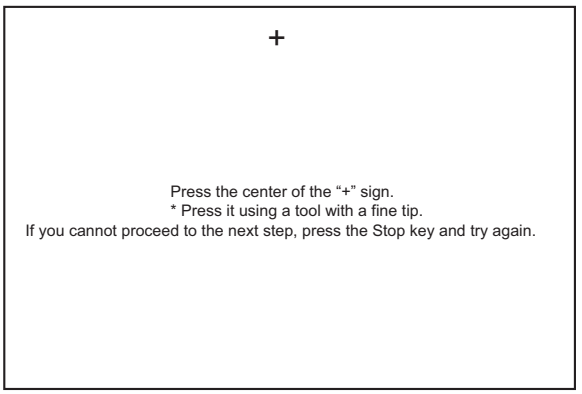 **Figure 1-3-25**

Item No.	Description
U201	

8. After completing the setting, “Initialize Completed.” is displayed and entering Check mode.

Figure 1-3-26

Method: [Check
Single Tap Check

1. Press the start key.
2. Press the center of three "+" signs and confirm the display positions.
   * : Press it using a tool with a fine tip (touch panel pen etc).

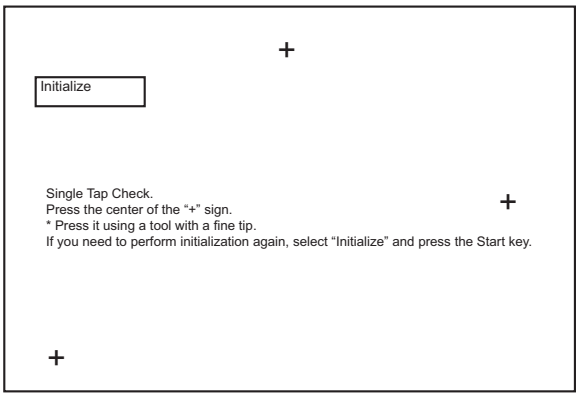

Figure 1-3-27

3. Make sure that the gap from coordinates X and Y is 6 or less, respectively.

   * : If the setting values are not aligned, select “Initialize” and press the Start key to revert to step 1.

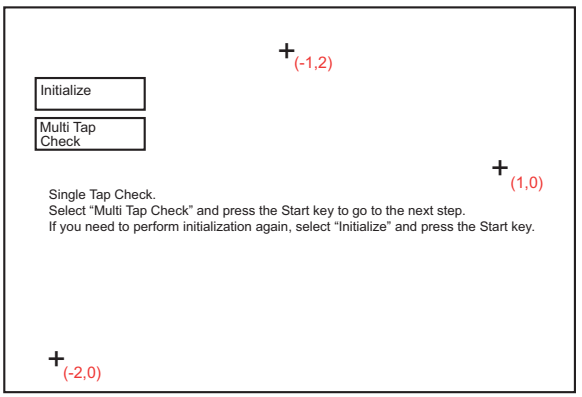

Figure 1-3-28

Item No.	Description
U201	**Multi Tap chek** 1. Select "Multi tap check", and press the start key. 2. Press two " ◉ " signs at the same time. (Step1) * : If the detecting values are not within the setting values, pressed detecting positions are displayed by red points. 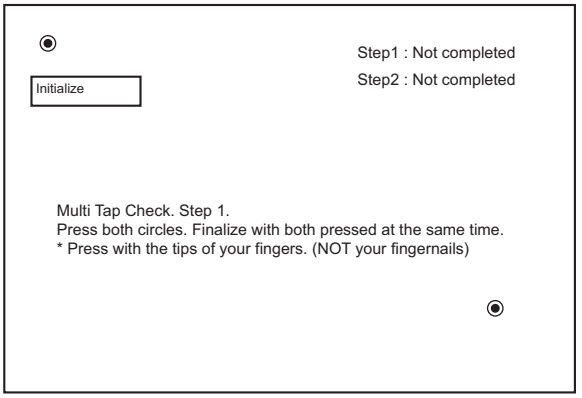 **Figure 1-3-29** 3. Press two " ◉ " signs displayed next at the same time. (Step2) 4. If the detecting values are within the setting values, Step1 and Step2 become "Completed". 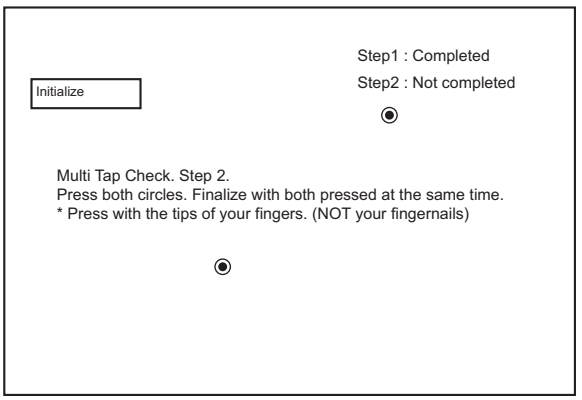 **Figure 1-3-30** 5. If "Multi tap check completed." is displayed, the checking process is completed successfully. 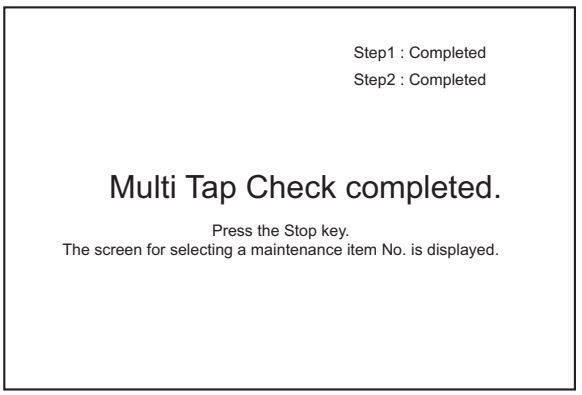 **Figure 1-3-31**

Item No.	Description
U201	* : If the detecting values are not within the setting values, pressed detecting positions are displayed by red points. And "Multi tap check Step 1" button is displayed. * : Select “Initialize” and press the Start key to revert to “Initialize”. * : Select “Multi tap check Step 1” and press the Start key to revert to “Multi tap check ”. 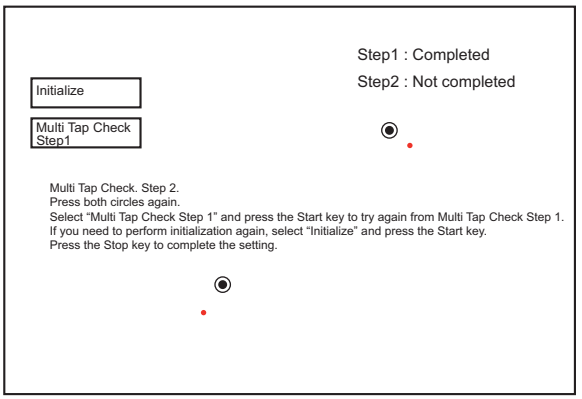 **Figure 1-3-32** **Completion** Press the stop key. The screen for selecting a maintenance item No. is displayed.

Item No.	Description
U202	**Setting the KMAS host monitoring system** **Description** Initializes or operates the KMAS host monitoring system. This is an optional device which is currently supported only by Japanese specification machines, so no setting is necessary. **Purpose** Performed at installation, periodic maintenance, and/or repair. **Method** 1. Press the start key. 2. Select the item. **Method: [Init/Set TEL No.]** 1. Select the item to be input. 2. Input the telephone number using the numeric keys. 3. Press the start key. The setting is set. 4. Select [Initialize]. 5. Select [Execute]. 6. Press the start key. Communication with the host initiated. 7. The result of communication will be displayed. (Refer to the result.) **Method: [Call Service End]** 1. Select [Execute]. 2. Press the start key. Communication with the host initiated. 3. The result of communication will be displayed. (Refer to the result.) **Completion** Press the stop key. The screen for selecting a maintenance item No. is displayed.

Display	Description
Init/Set TEL No.	Initialization/Phone Nbr. se
Call Service End	Outgoing at the end of service activities

Display	Description
TEL No. 1	Sales companies
TEL No. 2	Call center

Result table

Display	Description
OK	Communication properly terminated.
NG	Communication error (Nbr. of calls exceeded) Communication error (Communication timeout) Communication error (Communication trial timeout) Communication error (Other) KMAS unreachable

Item No.	Description
U203	**Checking DP operation** **Description** Simulates the original conveying operation separately in the DP. **Purpose** To check the DP operation. **Method** 1. Press the start key. 2. Place an original in the DP if running this simulation with paper. 3. Select the speed to be operated. **Display** / **Description** Normal Speed — Normal reading (600 dpi) High Speed — High-speed reading Mode — Sets the conveying timing verification mode Reset — Resets the conveying timing verification data Result — Resets the conveying timing verification data 4. Select the item to be operated. **Display** / **Description** CCD ADP — With paper, single-sided original of CCD CCD RADP — With paper, double-sided original of CCD CIS — With paper, double-sided original of CIS CCD ADP (Non-P) — Without paper, single-sided original of CCD (continuous operation) CCD RADP (Non-P) — Without paper, double-sided original of CCD (continuous operation) CIS (Non-P) — Without paper, double-sided original of CIS (continuous operation) 5. Press the start key. The operation starts. 6. To stop continuous operation, press the stop key. **Setting: [Mode]** 1. Select On or Off. **Display** / **Description** On — Sets the conveying timing verification mode on Off — Sets the conveying timing verification mode off 2. Press the start key. **Setting: [Reset]** 1. Select [Execute]. 2. Press the start key.

<table>
<tr><th>Item No.</th><th>Description</th></tr>
<tr><td>U203</td><td>

Setting: [Result]
Press the start key. The value is set.

Completion
Press the stop key. The screen for selecting a maintenance item No. is displayed.

</td></tr>
<tr><td>U204</td><td>

Setting the presence or absence of a key card or key counter

Description
Sets the presence or absence of the optional key card or key counter.
Purpose
To run this maintenance item if a key card or key counter is installed.

Method
1. Press the start key.
2. Select the item to be set.

Display	Description
Device	Sets the presence or absence of the key card or key counter
Message	Sets the message when optional equipment is not installed

Setting: [Device]
1. Select the optional counter to be installed.

Display	Description
Key-Card	The key card is installed
Key-Counter	The key counter is installed
Off	Not installed

Initial setting: Off
2. Press the start key. The setting is set.
3. Turn the main power switch off and on. Allow more than 5 seconds between Off and On.

Setting: [Message]
1. Select the [Key Device] or [Coin Vender].

Display	Description
Key Device	Select the prioritized display mode of the login dialog as the key device.
Coin Vender	Select the coin vender as the prioritized display of the login dialog.

* : Initial setting: Coin Vender
2. Press the start key. The setting is set.
3. Turn the main power switch off and on. Allow more than 5 seconds between Off and On.

</td></tr>
</table>

Item No.	Description
U206	**Setting the presence or absence of a coin vender** **Description** Sets the presence or absence of the optional coin vender. This is an optional device which is currently supported only by Japanese specification machines. **Purpose** To run this maintenance item if a coin vender is installed. **Method** 1. Press the start key. 2. Select the item to be set. **Display** / **Description** On/Off Config — Sets the presence or absence of the coin vender No Coin Action — Behavior when change runs out during copying Price — Charge per copy by size and color Boot Mode — Setting activation mode Apl Charge Mode — Extended charge unit **Setting: [On/Off Config]** 1. Select On or Off. **Display** / **Description** On — The coin vender is installed Off — The coin vender is not installed Initial setting: Off 2. Press the start key. The setting is set. 3. Turn the main power switch off and on. Allow more than 5 seconds between Off and On. **Setting: [No Coin Action]** 1. Select the item. **Display** / **Description** All Clear — All clear is performed Auto Clear — Auto clear is performed Off — Clear is not performed Initial setting: Off 2. Press the start key. The setting is set. 3. Turn the main power switch off and on. Allow more than 5 seconds between Off and On.

Item No.	Description
U206	

Setting: [Price]

1. Select the item to be set.

Display	Description
Normal	Charge setting: Normal
AD	Charge setting: Commercial
Print	Charge setting: Print
Apl	Charge setting: Extended

Setting: [Normal / AD]

1. Select the item to be set.

Display	Description
B/W	Black & White
CMY	Single color C, M, Y
RGB	Single color R, G, B
Full Color	Full color

2. Select the paper size to be set.
3. Change the setting value using the +/- keys.

Display	Description	Setting range	Initial setting	
			B/W	CMY/RGB Full Color
A3-Ledger	A3/Ledger size	0 to 300	10	100
B4	B4 size	0 to 300	10	50
Card	Post card	0 to 300	10	30
Other	Other	0 to 300	10	50

In 10-yen increments
Value of 0 allows non-restricted copying. (At a periodic maintenance, etc.)

4. Press the start key. The value is set.
5. Turn the main power switch off and on. Allow more than 5 seconds between Off and On.

Setting: [Print]

1. Select the item.

Display	Description
B/W	Black & White
Full Color	Full color

2. Select the paper size to be set.

Item No.	Description
U206	3. Change the setting value using the +/- keys.

Display	Description	Setting range	Initial setting	
			B/W	CMY/RGB Full Color
A3-Ledger	A3/Ledger size	0 to 300	10	100
B4	B4 size	0 to 300	10	50
Card	Post card	0 to 300	10	30
Other	Other	0 to 300	10	50

In 10-yen increments
Value of 0 allows non-restricted copying. (At a periodic maintenance, etc.)

Setting: [Apl]

1. Select the item to be set.
2. Change the setting value using the +/- keys.

Display	Description	Setting range	Initial setting
Apl1	Expanded charging unit 1	0 to 300	10
Apl2	Expanded charging unit 2	0 to 300	10
Apl3	Expanded charging unit 3	0 to 300	10
Apl4	Expanded charging unit 4	0 to 300	10
Apl5	Expanded charging unit 5	0 to 300	10

3. Press the start key. The value is set.
4. Turn the main power switch off and on. Allow more than 5 seconds between Off and On.

Setting: [Boot Mode]

1. Select the item.

Display	Description
Normal	Assign activation to normal mode.
Copy Service	Assign activation to copy service display.

Initial setting: Copy Service

2. Press the start key. The setting is set.

Setting: [Apl Charge Mode]

1. Select the item.

Display	Description
On	The extended charge unit is used.
Off	The extended charge unit is not used.

Initial setting: Off

2. Press the start key. The setting is set.

Completion

Press the stop key. The screen for selecting a maintenance item No. is displayed.

Item No.	Description
U207	**Checking the operation panel keys** **Description** Checks operation of the operation panel keys. **Purpose** To check operation of all the keys and LEDs on the operation panel. **Method** 1. Press the start key. The screen for executing is displayed. 2. [Count0] is displayed and the left most LED on the operation panel lights. 3. As the keys lined up in the same line as the lit indicator are pressed in the order from the top to the bottom, the figure shown on the touch panel increases in increments of 1. When all the keys in that line are pressed and if there are any LEDs corresponding to the keys in the line on the immediate right, the top LED in that line will light. 4. When all the keys on the operation panel have been pressed, all the LEDs light for up to 10 seconds. **Completion** Press the stop key. The screen for selecting a maintenance item No. is displayed.
U208	**Setting the paper size for the side deck** **Description** Sets the size of paper used in side deck. **Purpose** To change the setting when installing the side deck or the size of paper used in the side deck is changed. **Setting** 1. Press the start key. 2. Select the paper size (A4, B5 or Letter). Initial setting: Letter (Inch specifications) A4 (Metric specifications) 3. Press the start key. The setting is set. 4. Turn the main power switch off and on. Allow more than 5 seconds between Off and On.

Item No.	Description
U209	**Set RTC (Real Time Clock) Date** **Description** Assign a date and time to RTC. **Purpose** Used to assign a date and time to RTC when Maintenance T is displayed after C0840 is detected. **Setting** 1. Press the start key. 2. Select the item to be set. 3. Change the setting value using the +/- keys. Display: Year — Setting the year Month — Setting the month Day — Setting the day Hour — Setting the hour Minute — Setting the minute Second — Setting the second 4. Press the start key. The value is set. * : Perform U906 to clear "Time for Maintenance T" after making setting.
U211	**Setting the presence or absence of the job separator** **Description** Sets the presence or absence of the inner job separator. **Purpose** To run this maintenance item if the inner job separator is installed. **Method** 1. Press the start key. 2. Select [Inner Job Separator]. 3. Select On or Off. Display: On — The inner job separator is installed Off — The inner job separator is not installed Initial setting: Off 4. Press the start key. The setting is set. 5. Turn the main power switch off and on. Allow more than 5 seconds between Off and On.

Item No.	Description
U221	**Setting the USB host lock function** **Description** Specifies ON/OFF the USB host lock function. Setting this to ON causes the machine to be unable to recognize the device connected to the USB host. **Purpose** Set according to the preference of the user. **Method** 1. Press the start key. 2. Select [Host Lock]. 3. Select On or Off. Display: On — Description: USB host lock function ON Display: Off — Description: USB host lock function OFF Initial setting: Off 4. Press the start key. The setting is set. 5. Turn the main power switch off and on. Allow more than 5 seconds between Off and On.
U222	**Setting the IC card type** **Description** Sets the type of IC card. **Purpose** To change the type of IC card. **Setting** 1. Press the start key. 2. Select the item. Display: Other — Description: Sets the type of IC cards to other than SSFC Display: SSFC — Description: Sets the type of IC cards to SSFC Initial setting: Other 3. Press the start key. The setting is set. **Completion** Press the stop key. The screen for selecting a maintenance item No. is displayed.

Item No.	Description
U223	**Operation panel lock**

Description
Sets the operation panel lock function.
Purpose
This is performed to inhibit operating and canceling the system menu on the operation panel which may be done by others then an administrator.

Setting
1. Press the start key.
2. Select the item.

Display	Description
Unlock	Release the lock of the operation from the system menu
Partial Lock 1	The system menu entry and input/output related settings are locked
Partial Lock 2	The system menu entries, input/output related settings, and Job-execution-related settings are locked
Partial Lock 3	The system menu entries, input/output related settings, Job-execution-related settings, and paper related settings are locked
Lock	Lock the operation from the system menu and job cancel

Initial setting: Unlock

3. Press the start key. The setting is set.

Item	Partial Lock 1	Lock
Entering maintenance mode	Prohibited	Prohibited
Entering system menu	Prohibited	Prohibited
Transmission/transmission from document boxes	Prohibited	Prohibited
Entering addressbook add/edit	Prohibited	Prohibited
Entering document box add/edit	Prohibited	Prohibited
Pressing stop key	Permitted	Prohibited
Pressing status/job cancel	Permitted	Prohibited
Disconnecting FAX lines	Permitted	Prohibited

Completion
Press the stop key. The screen for selecting a maintenance item No. is displayed.

Item No.	Description
U224	**Panel sheet extension**

Description
Changes the image data and the message of the opening screen at the machine startup and the image data and the message of the service call screen to user specified data.
Purpose
Set according to the preference of the user.

Setting
1. Write the image data or the message data to the USB memory.
2. Insert USB memory in USB memory slot of the machine.
3. Turn the main power switch on.
4. Enter the maintenance item.
5. Press the start key.
6. Select the [Install] or [UnInstall].

Display	Description
Install	Installs the image data or the message data
UnInstall	Restores the original image data or message data

7. Select the item.

Display	Description	Display area
Opening Img	Startup screen	Entire start display
Call Img	Service call screen	Graphic display area
Home Menu Img	Home Menu screen	Home Menu display area
Call Msg Top	Service call message 1	Message display area (top)
Call Msg Detail	Service call message 2	Message display area (descriptive area)

8. Press the start key. Installation or uninstallation is started.
9. When normally completed, [OK] is displayed.

Supplement 1
File information

Description	File name	Image size (in pixels)	File format
Startup screen	opening_ext_image.png	Length: 480 Width : 800	PNG
Service call screen	callwin_ext_image.png	Length: 200 Width : 180	PNG
Home Menu screen	menu_background.png	Length: 480 Width : 800	PNG
Service call message 1	callwin_ext_mes_top.txt	-	TEXT (Unicode)
Service call message 2	callwin_ext_mes_detail.txt	-	TEXT (Unicode)

<table>
<tr><th>Item No.</th><th>Description</th></tr>
<tr><td>U224</td><td>
Supplement 2
Displaying start display
The pre-installed graphics file is displayed at power on or recovering from sleeping.
Graphics display on service call display
The pre-installed graphics file is displayed at a service call.
How to change the message
Entering #562 (4 letters) using the numeric keypad during a service call display will let service call messages 1 and 2.
How to reset the message display
Reverting the maintenance mode will automatically reset the message to the previous.

Caution
The graphics file for start display must be opaque. (To avoid the background from overlapping at recovering from sleeping.)
The total size of the files installable is approximately 4 MB.

Completion
Press the stop key. The screen for selecting a maintenance item No. is displayed.
</td></tr>
<tr><td>U234</td><td>
Setting punch destination

Description
Sets the destination of punch unit of 1000-sheet finisher or 4000-sheet finisher.
Purpose
To be set when installing a different punch unit from the destination of the machine.

Setting
1. Press the start key.
2. Select the destination.
<table>
<tr><th>Display</th><th>Description</th></tr>
<tr><td>Auto</td><td>Conforms to destination settings.</td></tr>
<tr><td>Japan Metric</td><td>Metric (Japan) specifications</td></tr>
<tr><td>Inch</td><td>Inch (North America) specifications</td></tr>
<tr><td>Europe Metric</td><td>Metric (Europe) specifications</td></tr>
</table>
Initial setting: Inch (Inch specifications)/Europe Metric (Metric specifications)
3. Press the start key. The setting is set.
4. Turn the main power switch off and on. Allow more than 5 seconds between Off and On.
</td></tr>
</table>

Item No.	Description
U237	**Setting finisher stack quantity**

Description
Sets the number of sheets of each stack on the main tray and on the middle tray in 1000-sheet finisher or 4000-sheet finisher.
Purpose
To change the setting when a stack malfunction has occurred.

Method
1. Press the start key.
2. Select the item to be set.

Display	Description
Main Tray	Number of sheets of stack on the main tray
Middle Tray	Number of sheets of stack on the middle tray for staple mode

Setting: [Main Tray]
1. Change the setting using the +/- keys or numeric keys.

Display	Description
0	When stapling paper less than B4 size, paper full is detected when 4,000 sheets are output. When stapling B4 size paper, or larger, paper full is detected when 1500 sheets are output.
1	When stapling 30 sheets or less, paper full is detected after 150 sets or 1500 sheets are output, whichever is faster.. When stapling 31 sheets or more, paper full is detected after 150 sets or 4,000 sheets are output, whichever is faster.

Initial setting: 0
2. Press the start key. The setting is set.
3. Turn the main power switch off and on. Allow more than 5 seconds between Off and On.

Setting: [Middle Tray]
1. Change the setting using the +/- keys or numeric keys.

Display	Description	
	Number of sheets of stack on the middle tray for staple mode	
	1000-sheet finisher	4000-sheet finisher
0	50 sheets	65 sheets
1	30 sheets	30 sheets

Initial setting: 0
Number of sheets of stack on the internal tray for non-staple copying: 10 sheets
2. Press the start key. The setting is set.
3. Turn the main power switch off and on. Allow more than 5 seconds between Off and On.

Item No.	Description
U240	**Checking the operation of the finisher** **Description** Turn each motor and solenoid of 1000-sheet finisher or 4000-sheet finisher ON. **Purpose** To check the operation of each motor and solenoid of the 1000-sheet finisher or 4000-sheet finisher. **Method** 1. Press the start key. 2. Select the item to be checked.

Display	Description
Motor	Checking the motor of the document finisher
Solenoid	Checking the solenoid of the document finisher
Mail Box	Checking the motor of the mailbox
Booklet	Checking the motor of the center-folding unit

Method: [Motor]
1. Select the item to be operated.
2. Press the start key. The operation starts.

Display	Description
Feed In(H)	DF paper entry motor (DFPEM) is turned on at high speed
Feed In(L)	DF paper entry motor (DFPEM) is turned on at low speed
Middle(H)	DF middle motor (DFMM) is turned on at high speed
Middle(L)	DF middle motor (DFMM) is turned on at low speed
Eject(H)	DF eject motor (DFEM) is turned on at high speed
Eject(L)	DF eject motor (DFEM) is turned on at low speed
Save(H)	DF drum motor (DFDRM) is turned on at high speed
Save(L)	DF drum motor (DFDRM) is turned on at low speed
Tray	DF tray motor (DFTM) is turned on Operating sequences: Ascends after descending to the bottom limit; descends again in one second after the intermediate sensor is detected to be off; ascends again after the intermediate sensor is detected to be on; then halts at the top limit
Staple Move	DF slide motor (DFSLM) is turned on
Staple	DF staple motor (DFSTM) is turned on
Width Test(A3)	DF side registration motor 1, 2 (DFSRM1, 2) is turned on
Width Test(LD)	DF side registration motor 1, 2 (DFSRM1, 2) is turned on
Beat	DF paddle motor (DFPDM) is turned on
Eject Unlock(HP)	DF eject release motor (DFERM) is turned on to home position

Item No.	Description
U240	

Display	Description
Sort Test	DF shift motor 1, 2 (DFSFM1, 2) is turned on
Eject Unlock(30)	DF eject release motor (DFERM) drive position 30-sheet stack
Eject Unlock(50)	DF eject release motor (DFERM) drive position 50-sheet stack
Eject Unlock(Fix)	DF eject release motor (DFERM) fixed drive position
Eject Unlock(Full)	DF eject release motor (DFERM) full-open drive position
Punch	Punch motor (PUM) is turned on
Punch Move	Punch slide motor (PUSLM) is turned on

Method: [Solenoid]

1. Select the item to be operated.
2. Press the start key. The operation starts.

Display	Description
Sub Tray	DF feedshift solenoid (DFFSSOL) is turned on
Save Drum	DF drum solenoid (DFDRSOL) is turned on
Booklet	DF center fold solenoid (DFCFSOL) is turned on
Punch	Punch solenoid (PUSOL) is turned on
Three Fold	CF feedshift solenoid (CFFSSOL) is turned on

Method: [Mail Box]

1. Select the item to be operated.
2. Press the start key. The operation starts.

Display	Description
Conv	MB drive motor (MBDM) is turned on at paper conveying
Branch	MB drive motor (MBDM) is turned on at feedshift operation

Method: [Booklet]

1. Select the item to be operated.
2. Press the start key. The operation starts.

Display	Description
Folding	CF main motor (CFMM) is turned on
Blade	CF blade motor (CFBM) is turned on
Bundle Up	CF adjustment motor 2 (CFADM2) is turned on
Bundle Down	CF adjustment motor 1 (CFADM1) is turned on
Staple	CF staple motor (CFSTM) is turned on
Width Test(A3)	CF side registration motor 1, 2 (CFSRM1, 2) is turned on
Width Test(LD)	CF side registration motor 1, 2 (CFSRM1, 2) is turned on
Feed In	CF paper entry motor (CFPEM) is turned on

Item No.	Description
U240	**Completion** Press the stop key. The screen for selecting a maintenance item No. is displayed.
U241	**Checking the operation of the switches of the finisher** **Description** Displays the status of each switches and sensors of 1000-sheet finisher or 4000-sheet finisher. **Purpose** To check the operation of each switches and sensors of the 1000-sheet finisher or 4000-sheet finisher. **Method** 1. Press the start key. 2. Select the item to be checked.

Display	Description
Finisher	Checking the switch and sensor of the document finisher
Mail Box	Checking the switch and sensor of the mailbox
Booklet	Checking the switch and sensor of the center-folding unit
Punch	Checking the switch and sensor of the punch unit

Method: [Finisher]

1. Turn each switch or sensor on and off manually to check the status.
   When the on-status of a switch or sensor is detected, that switch or sensor is displayed in reverse.

Display	Description
Front Cover	DF front cover switch (DFFCSW)
MPT*1	DF eject cover switch (DFECSW)
Top Cover*2	DF top cover switch (DFTCSW)
Tray U-Limit	DF tray sensor 1 (DFTS1)
Tray HP2*1	DF tray sensor 2 (DFTS2)
Tray Middle	DF tray sensor 3 (DFTS3)
Tray L-Limit	DF tray sensor 4 (DFTS4)
Tray L-Limit(BL)*1	DF tray sensor 5 (DFTS5)
Tray Top	DF tray upper surface sensor (DFTUSS)
HP	DF paper entry sensor (DFPES)
Sub Tray Eject*1	DF sub eject sensor (DFSES)
Middle Tray Eject	DF middle eject sensor (DFMES)
Drum*1	DF drum sensor (DFDRS)
Staple HP	DF slide sensor (DFSLS)
Middle Tray	DF middle tray sensor (DFMTS)

Item No.	Description
U241	

Display	Description
Width Front HP	DF side registration sensor 1 (DFSRS1)
Width Tail HP	DF side registration sensor 2 (DFSRS2)
Bundle Eject HP	DF bundle discharge sensor (DFBDS)
Match Paddle*1	DF adjustment sensor (DFADS)
Lead Paddle	DF paddle sensor (DFPDS)
Shift Front HP*1	DF shift sensor 1 (DFSFS1)
Shift Tail HP	DF shift sensor 2 (DFSFS2)
Shift Unlock HP	DF shift release sensor (DFSFRS)
Sub Tray Full	DF sub tray full sensor (DFSTFS)
Shift Set	DF shift set sensor (DFSFSS)

*1: 4000-sheet finisher only. *2: 1000-sheet finisher only.

Method: [Mail Box]

1. Turn each switch or sensor on and off manually to check the status.
   When the on-status of a switch or sensor is detected, that switch or sensor is displayed in reverse.

Display	Description
Eject	MB eject sensor (MBES)
Cover	MB cover open/close switch (MBCOCSW)
Over Flow1	MB overflow sensor 1 (MBOFS1)
Over Flow2	MB overflow sensor 2 (MBOFS2)
Over Flow3	MB overflow sensor 3 (MBOFS3)
Over Flow4	MB overflow sensor 4 (MBOFS4)
Over Flow5	MB overflow sensor 5 (MBOFS5)
Over Flow6	MB overflow sensor 6 (MBOFS6)
Over Flow7	MB overflow sensor 7 (MBOFS7)
Motor HP	MB paper entry sensor (MBPES)

Item No.	Description
U241	**Method: [Booklet]** 1. Turn each switch or sensor on and off manually to check the status. When the on-status of a switch or sensor is detected, that switch or sensor is displayed in reverse.

Display	Description
HP	CF paper entry sensor (CFPES)
Eject	CF eject sensor (CFES)
Paper	CF paper sensor (CFPS)
Tray Full	CF tray full sensor (CFTFS)
Bundle Up HP	CF adjustment sensor 1 (CFADS1)
Bundle Down HP	CF adjustment sensor 2 (CFADS2)
Width Up HP	CF side registration sensor 1 (CFSRS1)
Width Down HP	CF side registration sensor 2 (CFSRS2)
Blade HP	CF blade sensor (CFBLS)
Tray	CF tray switch (CFTSW)
Set	CF set switch (CFSSW)
Left Guide	CF left guide switch (CFLGSW)
Vertical Feed	CF paper conveying sensor (CFPCS)

Method: [Punch]

1. Turn each switch or sensor on and off manually to check the status.
When the on-status of a switch or sensor is detected, that switch or sensor is displayed in reverse.

Display	Description
Punch HP	Punch home position sensor (PUHPS)
Edge Face1	Punch paper edge sensor (PUPES)
Edge Face2	Punch paper edge sensor (PUPES)
Edge Face3	Punch paper edge sensor (PUPES)
Edge Face4	Punch paper edge sensor (PUPES)
Tank	Punch tank set switch (PUTSSW)
Tank Full	Punch tank full sensor (PUTFS)

Completion

Press the stop key. The screen for selecting a maintenance item No. is displayed.

Item No.	Description
U243	**Checking the operation of the DP motors** **Description** Turn the motors or solenoids in the DP on. **Purpose** To check the operation of the DP motors and solenoids. **Method** 1. Press the start key. 2. Select the item to be operated. 3. Press the start key. The operation starts. **Display** / **Description** Feed Motor — DP original feed motor (DPOFM) is turned on Conv Motor — DP original conveying motor (DPOCM) is turned on Rev Motor*1 — DP switchback motor (DPSBM) is turned on Lift Motor — DP lift motor (DPLM) is turned on Rev Press Sol*1 — DP pressure solenoid (DPPSOL) is turned on Rev Branch Sol*1 — DP feedshift solenoid (DPFSSOL) is turned on Eject Motor*2 — DP eject motor (DPEM) is turned on Regist Motor*2 — DP registration motor (DPRM) is turned on DP Fan*2 — DP fan motor 1 (DPFM1) is turned on CIS Fan*2 — DP fan motor 2 (DPFM2) is turned on *1: Reversed DP only. *2: Dual scan DP only. 4. To turn each motor off, press the stop key. **Completion** Press the stop key when operation stops. The screen for selecting a maintenance item No. is displayed.

Item No.	Description
U244	**Checking the DP switches** **Description** Displays the status of the respective switches and sensors in the DP. **Purpose** To check if respective switches and sensors in the DP operate correctly. **Method** 1. Press the start key. 2. Turn each switch or sensor on and off manually to check the status. When the on-status of a switch or sensor is detected, that switch or sensor is displayed in reverse. **Completion** Press the stop key. The screen for selecting a maintenance item No. is displayed.

Display	Description
Feed	DP feed sensor (DPFS)
Regist*1	DP registration sensor (DPRS)
Timing	DP timing sensor (DPTS)
CIS Head*2	DP CIS sensor (DPCS)
Tray*1	DP switchback sensor (DPSBS)
Set	DP original sensor (DPOS)
Longitudinal	DP original length switch (DPOLSW)
Lift U-Limit	DP lift sensor 1 (DPLS1)
Lift L-Limit	DP lift sensor 2 (DPLS2)
Cover Open	DP interlock switch (DPILSW)
Open	DP open/close switch (DPOCSW)
Eject	DP eject sensor (DPES)
Slant*2	DP slant sensor (DPSS)

*1: Reversed DP only. *2: Dual scan DP only.

Item No.	Description
U245	**Checking messages** **Description** Displays a list of messages on the touch panel of the operation panel. **Purpose** To check the messages to be displayed. **Method** 1. Press the start key. 2. Change the message using the cursor up/down keys. When a message number is entered with the numeric keys and then the start key is pressed, the message corresponding the specified number is displayed. 3. Change the language using the +/- keys. **Completion** Press the stop key. The screen for selecting a maintenance item No. is displayed.

Item No.	Description
U246	**Setting the finisher** **Description** Provides various settings for the 1000-sheet finisher or 4000-sheet finisher, if furnished. **Purpose** **Adjustment of registration stop timing in punch mode** Adjust if skewed paper conveying occurs or if the copy paper is Z-folded in punch mode. **Adjustment of paper stop timing in the punch mode** To adjust this item when the position of a punch hole is different from the specified one. **Adjustment of center position timing in the punch mode** Adjusts the center position of a punch hole in punch mode if the position is not proper. **Adjustment of front/rear side registration home position** Provides optimization when paper jam occurs due to an inferior fitting of the side registration guides to paper. **Adjustment of front/rear shift home position** Performed when adjustment is lost with the ejected paper **Adjusting of front/back stapling home position** Adjusts the stapling position in the staple mode if the position is not proper. **Adjustment of upper/lower side registration home position** Provides optimization when paper jam occurs due to an inferior fitting of the side registration guides to paper. **Adjustment of booklet stapling position** Adjusts the booklet stapling position in the stitching mode if the position is not proper. **Adjustment of center folding position** Adjusts the center folding position in the stitching mode if the position is not proper. **Adjustment of tri- folding position** Adjusts the tri-folding position in the stitching mode if the position is not proper. **Method** 1. Press the start key. 2. Select the item to set. **Method: [Finisher]** 1. Select the item to set.

Display	Description
Finisher	Adjustment of 1000-sheet finisher and 4000-sheet finisher
Booklet	Adjustment of center-folding unit

Display	Description
Punch Regist	Adjustment of registration stop timing in punch mode
Punch Feed	Adjustment of the paper stop timing in punch mode
Punch Width	Adjustment of the center position timing in punch mode
Width Front HP	Adjustment of front side registration home position
Width Tail HP	Adjustment of rear side registration home position
Shift Front HP	Adjustment of front shift home position
Shift Tail HP	Adjustment of rear shift home position
Staple HP	Adjustment of front and back stapling home position

Item No.	Description
U246	

Setting: [Punch Regist]

1. Select [Punch Regist].
2. Change the setting value using the +/- keys or numeric keys.

Description	Setting range	Initial setting	Change in value per step
Adjustment of registration stop timing	-20 to 20	0	0.25 mm

If skewed paper conveying occurs (sample 1), increase the setting value. If the copy paper is Z-folded (sample 2), decrease the setting value.

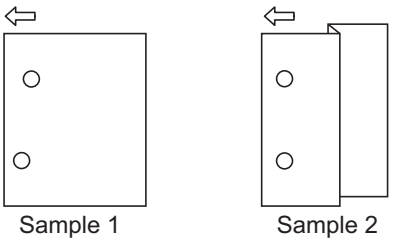

Figure 1-3-33

3. Press the start key. The value is set.

Setting: [Punch Feed]

1. Select [Punch Feed].
2. Change the setting value using the +/- keys or numeric keys.

Description	Setting range	Initial setting	Change in value per step
Adjustment of the paper stop timing	-10 to 10	0	0.52 mm

If the distance of the position of a punch hole is smaller than the specified value A, increase the setting value. If the distance is larger than the value A, decrease the setting value.

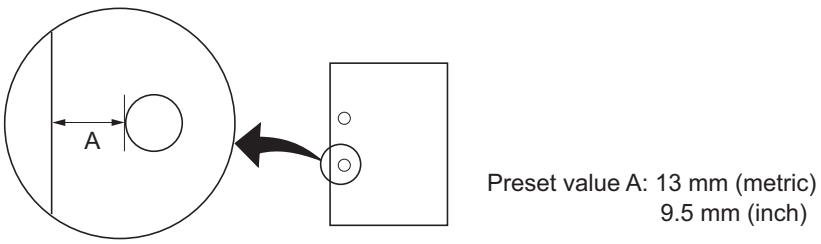

Figure 1-3-34

3. Press the start key. The value is set.

Item No.	Description
U246	

Setting: [Punch Width]

1. Select [Punch Width].
2. Change the setting value using the +/- keys or numeric keys.

Description	Setting range	Initial setting	Change in value per step
Adjustment of the punch center position timing	-4 to 4	0	0.52 mm

If the punch hole is too close to the front of the machine, increase the setting value. If the punch hole is too close to the rear of the machine, decrease the setting value.

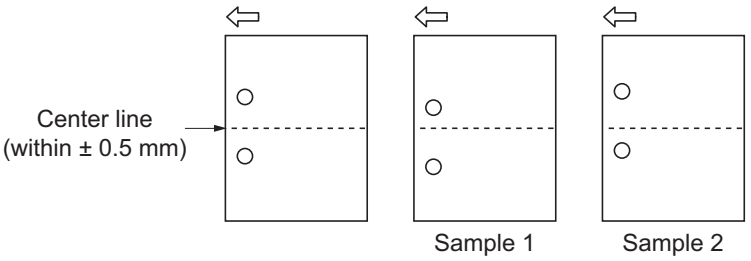

Figure 1-3-35

3. Press the start key. The value is set.

Setting: [Width Front HP/Width Tail HP]

1. Select [Width Front HP] or [Width Tail HP].
2. Change the setting value using the +/- keys or numeric keys.

Description	Setting range	Initial setting	Change in value per step
Adjustment of front side registration home position	-15 to 15	0	0.19 mm
Adjustment of rear side registration home position	-15 to 15	0	0.19 mm

3. Press the start key. The value is set.
4. Press the stop key. The screen for selecting a maintenance item No. is displayed.
5. Enter maintenance mode U240 and select [Motor], then [Width Test(A3)].
   The width guides of the middle tray will move to A3-size position.
6. Pull the middle tray, insert paper between the guides and check that paper is abut the guides.
7. Repeat the above adjustment until paper is properly in position.

Setting: [Shift Front HP/Shift Tail HP]

1. Select [Shift Front HP] or [Shift Tail HP].
2. Change the setting value using the +/- keys or numeric keys.

Description	Setting range	Initial setting	Change in value per step
Adjustment of front shift home position	-15 to 15	0	0.19 mm
Adjustment of rear shift home position	-15 to 15	0	0.19 mm

3. Press the start key. The value is set.
4. Press the stop key. The screen for selecting a maintenance item No. is displayed.
5. Enter maintenance mode U240 and select [Motor], then [Sort Test].
6. Repeat the above adjustment until eject paper is properly in position.

Item No.	Description
U246	

Setting: [Staple HP]

1. Select [Staple HP].
2. Change the setting value using the +/- keys or numeric keys.

Description	Setting range	Initial setting	Change in value per step
Adjustment of front and back stapling home position	-15 to 15	0	0.19 mm

When staple positions are off toward the front side of the machine (sample 1), increase the setting value. When staple positions are off toward the rear side of the machine (sample 2), decrease the setting value.

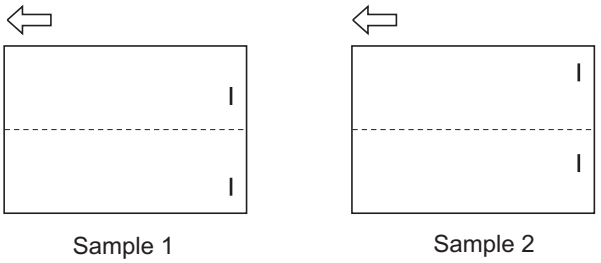

Figure 1-3-36

3. Press the start key. The value is set.

Method: [Booklet]

1. Select the item to set.

Display	Description
Width Up HP	Adjustment of upper side registration home position
Width Down HP	Adjustment of lower side registration home position
Staple Pos1	Adjustment of booklet stapling position for A4/Letter size
Staple Pos2	Adjustment of booklet stapling position for B4/Legal size
Staple Pos3	Adjustment of booklet stapling position for A3/Ledger/8K size
Booklet Pos1	Adjustment of center folding position for A4/Letter size
Booklet Pos2	Adjustment of center folding position for B4/Legal size
Booklet Pos3	Adjustment of center folding position for A3/Ledger/8K size
Three Fold	Adjustment of tri-folding position

Item No.	Description
U246	**Setting: [Width Up HP/Width Down HP]** 1. Select [Width Up HP] or [Width Down HP]. 2. Change the setting value using the +/- keys or numeric keys.

Description	Setting range	Initial setting	Change in value per step
Adjustment of upper side registration home position	-15 to 15	0	0.34 mm
Adjustment of lower side registration home position	-15 to 15	0	0.34 mm

3. Press the start key. The value is set.
4. Press the stop key. The screen for selecting a maintenance item No. is displayed.
5. Enter maintenance mode U240 and select [Booklet], then [Width Test(A3)].
   The width guides of the center-folding unit will move to A3-size position.
6. Pull the center-folding unit, insert paper between the guides and check that paper is abut the guides.
7. Repeat the above adjustment until paper is properly in position.

Setting: [Staple Pos]

1. Select [Staple Pos1], [Staple Pos2] or [Staple Pos3].
2. Change the setting value using the +/- keys or numeric keys.

Description	Setting range	Initial setting	Change in value per step
Adjustment of booklet stapling position for A4/Letter size	-15 to 15	0	0.32 mm
Adjustment of booklet stapling position for B4/Legal size	-15 to 15	0	0.32 mm
Adjustment of booklet stapling position for A3/Ledger/8K size	-15 to 15	0	0.32 mm

When staples are placed too far right (sample 1), decrease the preset value. When staples are placed too far left (sample 2), increase the preset value.
Reference value: within ± 2 mm

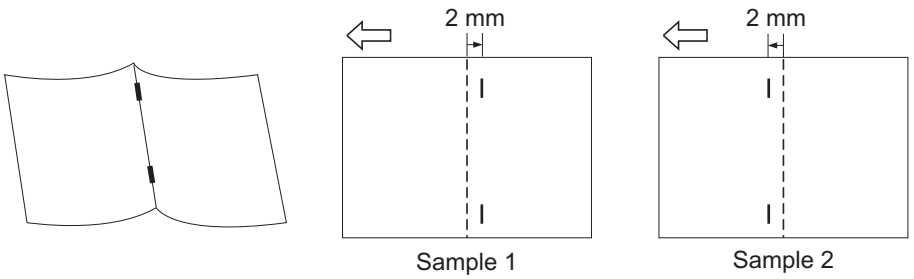

Figure 1-3-37

3. Press the start key. The value is set.

Item No.	Description
U246	

Setting: [Booklet Pos]

1. Select [Booklet Pos1], [Booklet Pos2] or [Booklet Pos3].
2. Change the setting value using the +/- keys or numeric keys.

Description	Setting range	Initial setting	Change in value per step
Adjustment of center folding position for A4/Letter size	-15 to 15	0	0.32 mm
Adjustment of center folding position for B4/Legal size	-15 to 15	0	0.32 mm
Adjustment of center folding position for A3/Ledger/ 8K size	-15 to 15	0	0.32 mm

When the centerfold position too far right (sample 1), increase the preset value. When the centerfold position too far left (sample 2), decrease the setting value.
Reference value A: A4, Letter: Length of paper × 1/2 ± 2 mm
A3, Ledger, B4: Length of paper × 1/2 ± 3 mm

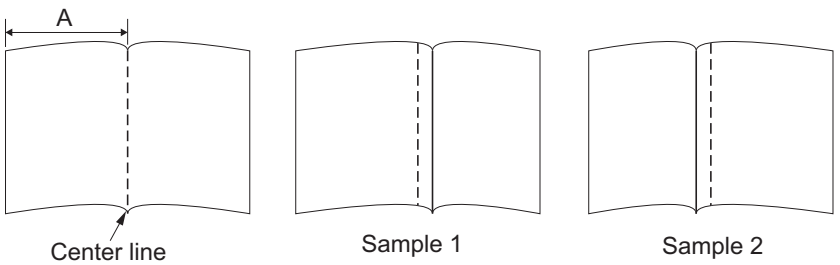

Figure 1-3-38

3. Press the start key. The value is set.

Setting: [Three Fold]

1. Select [Three Fold].
2. Change the setting value using the +/- keys or numeric keys.

Description	Setting range	Initial setting	Change in value per step
Adjustment of tri-folding position	-15 to 15	0	0.32 mm

When the tri-fold position too far right (sample 1), increase the preset value. When the tri-fold position too far left (sample 2), decrease the setting value.
Reference value A: 7.0 ± 2 mm

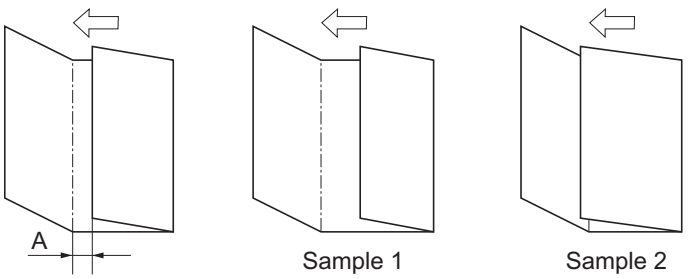

Figure 1-3-39

3. Press the start key. The value is set.

Completion

Press the stop key. The screen for selecting a maintenance item No. is displayed.

Item No.	Description
U247	**Setting the paper feed device** **Description** Turn on motor and clutches of paper feeder device. **Purpose** To check the operation of motor and clutches of paper feed device. **Method** 1. Press the start key. 2. Select the paper feed device. **Method: [2PF/Side 2PF]** 1. Press [Motor] or [Clutch] and select the item. 2. Select [Execute]. 3. Press the start key. The operation starts. 4. To stop operation, press the stop key.

Display	Description
2PF	Paper feeder
LCF	Large capacity feeder
Side Deck	Side deck
SMT	Side multi tray
Side 2PF	Side paper feeder
Side LCF	Side large capacity feeder

Display		Description
Motor	Off	PF paper feed motor (PFPFM) is turned off
	On	PF paper feed motor (PFPFM) is turned on
Clutch	C1 Clutch	PF paper feed clutch 1 (PFPFCL1) is turned on
	C2 Clutch	PF paper feed clutch 2 (PFPFCL2) is turned on
	V Feed(H) Clutch	PF paper conveying clutch 1 (PFPCCL1) is turned on
	V Feed(L) Clutch	PF paper conveying clutch 2 (PFPCCL2) is turned on
Execute		Executing the action

Item No.	Description
U247	

Method: [LCF/Side LCF]

1. Press [Motor] or [Clutch] and select the item.

Display		Description
Motor	Off	PF paper feed motor (PFPFM) is turned off
	On	PF paper feed motor (PFPFM) is turned on
Clutch	C1 Clutch	PF paper feed clutch 1 (PFPFCL1) is turned on
	C2 Clutch	PF paper feed clutch 2 (PFPFCL2) is turned on
	V Feed Clutch	PF paper conveying clutch 1 (PFPCCL1) is turned on
	H Feed1 Clutch	PF paper conveying clutch 2 (PFPCCL2) is turned on
	H Feed2 Clutch	PF paper conveying clutch 3 (PFPCCL3) is turned on
Execute		Executing the action

2. Select [Execute].
3. Press the start key. The operation starts.
4. To stop operation, press the stop key.

Method: [Side Deck]

1. Press [Motor] or [Clutch] and select the item.

Display		Description
Motor	Off	SD paper feed motor (SDPFM) is turned off
	On	SD paper feed motor (SDPFM) is turned on
Clutch	C1 Clutch	SD paper feed clutch (SDPFCL) is turned on
	Cassette1 Solenoid	SD paper feed solenoid (SDPFSOL) is turned on
Execute		Executing the action

2. Select [Execute].
3. Press the start key. The operation starts.
4. To stop operation, press the stop key.

Method: [SMT]

1. Press [Motor] or [Clutch] and select the item.

Display		Description
Motor	Off	SM paper feed motor (SMPFM) is turned off
	On	SM paper feed motor (SMPFM) is turned on
Clutch	C1 Clutch	SM paper feed clutch (SMPFCL) is turned on
	Feed1 Clutch	SMT paper conveying clutch 1 (SMPCCL1) is turned on
	Feed2 Clutch	SMT paper conveying clutch 2 (SMPCCL2) is turned on
	Feed3 Clutch	SMT paper conveying clutch 3 (SMPCCL3) is turned on
	Separator Solenoid	SM feedshift solenoid (SMFSSOL) is turned on
Execute		Executing the action

2. Select [Execute].
3. Press the start key. The operation starts.
4. To stop operation, press the stop key.

Item No.	Description
U247	**Completion** Press the stop key. The screen for selecting a maintenance item No. is displayed.
U249	**Finisher operation test** **Description** Perform operating tests on the 4000-sheet finisher. **Purpose** To check the operation of the 4000-sheet finisher. **Method** 1. Press the start key. 2. Select the item. **Display** / **Description** Punch Position — Check the stop position of punching Booklet Pass — Check the paper paths to the center-folding unit 3. Press the start key. 4. Press the system menu key to make a test copy. **Completion** Press the stop key. The screen for selecting a maintenance item No. is displayed.
U250	**Checking/clearing the maintenance cycle** **Description** Changes preset values for maintenance cycle and automatic grayscale adjustment. **Purpose** Provides changing the time when the message to acknowledge to conduct maintenance and automatic grayscale adjustment is periodically displayed. **Setting** 1. Press the start key. 2. Select the item to be set. 3. Change the setting using the +- keys or numeric keys.

Display	Description	Setting range	Initial setting
M.Cnt A	Preset values for maintenance cycle (kit A)	0 to 9999999	600000
M.Cnt B	Preset values for maintenance cycle (kit B)	0 to 9999999	600000
M.Cnt C	Preset values for maintenance cycle (kit C)	0 to 9999999	300000
M.Cnt HT	Preset values for automatic grayscale adjustment	0 to 9999999	0
Cassette 1	Maintenance counter cassette1	0 to 9999999	150000
Cassette 2	Maintenance counter cassette1	0 to 9999999	150000
Cassette 3	Maintenance counter cassette1	0 to 9999999	150000
Cassette 4	Maintenance counter cassette1	0 to 9999999	150000

Item No.	Description
U250	

Display	Description	Setting range	Initial setting
Cassette 5	Maintenance counter cassette5	0 to 9999999	150000
Cassette 6	Maintenance counter cassette6	0 to 9999999	150000
Cassette 7	Maintenance counter cassette7	0 to 9999999	150000
Clear	Maintenance counter all clear	0 to 9999999	-

4. Press the start key. The value is set.

Clearing

1. Select [Clear].
2. Press the start key. The setting value is cleared.

Completion

Press the stop key. The screen for selecting a maintenance item No. is displayed.

* : When the firmware is upgraded in the field, the standard counter value newly added should be set to 150000.

Item No.	Description
U251	**Checking/clearing the maintenance counter**

Description
Displays and clears or changes the maintenance count and automatic grayscale adjustment count.
Purpose
To verify the maintenance counter count and automatic grayscale count. Also to clear the count during maintenance service.

Setting
1. Press the start key.
2. Select the item to be changed.
3. Change the setting using the +/- keys or numeric keys.

Display	Description	Setting range	Initial setting
M.Cnt A	Count value for maintenance cycle (kit A)	0 to 9999999	0
M.Cnt B	Count value for maintenance cycle (kit B)	0 to 9999999	0
M.Cnt C	Count value for maintenance cycle (kit C)	0 to 9999999	0
M.Cnt HT	Automatic grayscale adjustment count	0 to 9999999	0
Cassette 1	Maintenance counter cassette1	0 to 9999999	0
Cassette 2	Maintenance counter cassette2	0 to 9999999	0
Cassette 3	Maintenance counter cassette3	0 to 9999999	0
Cassette 4	Maintenance counter cassette4	0 to 9999999	0
Cassette 5	Maintenance counter cassette5	0 to 9999999	0
Cassette 6	Maintenance counter cassette6	0 to 9999999	0
Cassette 7	Maintenance counter cassette7	0 to 9999999	0
Clear	Maintenance counter all clear	0 to 9999999	-

4. Press the start key. The value is set.

Clearing
1. Select [Clear].
2. Press the start key. The setting value is cleared.

Completion
Press the stop key. The screen for selecting a maintenance item No. is displayed.

* : When the firmware is upgraded in the field, input the counter value of U901 into the primary feed counter.
If the counter value is larger than 150000, replace the primary feed roller and input "0".

Item No.	Description
U252	**Setting the destination** **Description** Switches the operations and screens of the machine according to the destination. **Purpose** To be executed after initializing the backup RAM, in order to return the setting to the value before replacement or initialization. **Method** 1. Press the start key. 2. Select the destination. **Display** / **Description** Inch — Inch (North America) specifications Europe Metric — Metric (Europe) specifications Asia Pacific — Metric (Asia Pacific) specifications Australia — Australia specifications China — China specifications Korea — Korea specifications 3. Press the start key. 4. Turn the main power switch off and on. Allow more than 5 seconds between Off and On. * : An error code is displayed in case of an initialization error. When errors occurred, turn main power switch off then on, and execute initialization using maintenance item U252. **Error codes** **Codes** / **Description** 0001 — Entity error 0002 — Controller error 0020 — Engine error 0040 — Scanner error

Item No.	Description
U253	**Switching between double and single counts** **Description** Switches the count system for the total counter and other counters for every color mode. **Purpose** Used to select, according to the preference of the user (copy service provider), if A3/Ledger paper is to be counted as one sheet (single count) or two sheets (double count). **Setting** 1. Press the start key. 2. Select the item to set. Displayed only if the setting of U276 (Setting the copy count mode) is Mode1. 3. Select the count system. Initial setting: DBL(A3/Ledger) 4. Press the start key. The setting is set. **Completion** Press the stop key. The screen for selecting a maintenance item No. is displayed.

Display	Description
Full Color	Count system of full color mode
Mono Color*	Count system of single color mode
B/W	Count system of black/white mode

Display	Description
SGL(All)	Single count for all size paper
DBL(A3/Ledger)	Double count for A3/Ledger size or larger
DBL(B4)	Double count for B4 size or larger
DBL(Folio)	Double count for Folio size or larger

<table>
<tr><th>Item No.</th><th>Description</th></tr>
<tr><td>U260</td><td>

Selecting the timing for copy counting

Description
Changes the copy count timing for the total counter and other counters.
Purpose
To be set according to user request.

Setting
1. Press the start key.
2. Select the copy count timing.

<table>
<tr><th>Display</th><th>Description</th></tr>
<tr><td>Feed</td><td>When secondary paper feed starts</td></tr>
<tr><td>Eject</td><td>When the paper is ejected</td></tr>
</table>

Initial setting: Eject
3. Press the start key. The setting is set.

Completion
Press the stop key. The screen for selecting a maintenance item No. is displayed.

</td></tr>
<tr><td>U265</td><td>

Setting OEM purchaser code

Description
Sets the OEM purchaser code.
Purpose
Sets the code when replacing the main PWB and the like.

Setting
1. Press the start key.
2. Change the setting value using the numeric keys.
3. Press the start key. The setting is set.
4. Turn the main power switch off and on. Allow more than 5 seconds between Off and On.

</td></tr>
</table>

Item No.	Description
U271	**Setting the page count** **Description** Banner counting **Purpose** To change when modifying counting Banner * : If U253 is adjusted to double-counting, the value which is multiplied with this value will be the count value. **Setting** 1. Press the start key. 2. Select the item. 3. Change the setting value using the +/- keys or numeric keys. **Display** / **Description** / **Setting range** / **Initial setting** Banner A / Counting for Banner A (470.1mm to 915mm/18.51” to 36”) / 2 to 30 / 2 Banner B / Counting for Banner B (915.1mm to 1,220mm/36.01” to 48”) / 2 to 30 / 3 4. Press the start key. The value is set. **Completion** Press the stop key. The screen for selecting a maintenance item No. is displayed.
U276	**Setting the copy count mode** **Description** Sets the count mode of single color mode. **Purpose** To change the charging counter which counts up in single color printing. **Setting** 1. Press the start key. 2. Select the mode. **Display** / **Description** Mode0 / This lets the full color counter count up in single color Mode1 / This lets the single color counter count up in single color Initial setting: Mode 0 3. Press the start key. The setting is set. **Completion** Press the stop key. The screen for selecting a maintenance item No. is displayed.

<table>
<tr><th>Item No.</th><th>Description</th></tr>
<tr><td>U278</td><td>

Setting the delivery date

Description
Enter delivery date in month, day, and year.
Purpose
To operate when installing the machine. Perform this to confirm the delivery date.

Method
1. Press the start key.
2. Select [Today].
3. Press the start key. The delivery date is set.

Clearing
1. Select [Clear].
2. Press the start key. The delivery date is cleared.

Completion
Press the stop key. The screen for selecting a maintenance item No. is displayed.

</td></tr>
<tr><td>U284</td><td>

Setting 2 color copy mode

Description
Sets whether to use 2 color copy mode.
Purpose
According to user request, changes the setting.

Setting
1. Press the start key.
2. Select On or Off.

<table>
<tr><th>Display</th><th>Description</th></tr>
<tr><td>On</td><td>2 color copy mode is enabled</td></tr>
<tr><td>Off</td><td>2 color copy mode is disabled</td></tr>
</table>

Initial setting: On
If On is selected, 2-color copy will be displayed on the color function screen.
3. Press the start key. The setting is set.

Completion
Press the stop key. The screen for selecting a maintenance item No. is displayed.

</td></tr>
</table>

<table>
<tr><th>Item No.</th><th>Description</th></tr>
<tr><td>U285</td><td>

Setting service status page

Description
Determines displaying the print coverage report on reporting.
Purpose
According to user request, changes the setting.

Setting
1. Press the start key.
2. Select On or Off.

<table>
<tr><th>Display</th><th>Description</th></tr>
<tr><td>On</td><td>Displays the print coverage</td></tr>
<tr><td>Off</td><td>Not to display the print coverage</td></tr>
</table>

Initial setting: On
3. Press the start key. The setting is set.

Completion
Press the stop key. The screen for selecting a maintenance item No. is displayed.

</td></tr>
<tr><td>U323</td><td>

Setting abnormal temperature and humidity warning

Description
Specify whether or not a notice is displayed on the operation panel when abnormal temperature and humidity is detected.
Purpose
According to user request, changes the setting.

Setting
1. Press the start key.
2. Select On or Off.

<table>
<tr><th>Display</th><th>Description</th></tr>
<tr><td>On</td><td>Displays the abnormal temperature and humidity warning</td></tr>
<tr><td>Off</td><td>Not to display the abnormal temperature and humidity warning</td></tr>
</table>

Initial setting: On
3. Press the start key. The setting is set.

Completion
Press the stop key. The screen for selecting a maintenance item No. is displayed.

</td></tr>
</table>

Item No.	Description
U325	**Setting the paper interval** **Description** Due to the fact that, if toner consumption per driving time drastically lowers, the variation in coloring and low density and gray background become prominent, the print coverage that executes toner ejection according to the low density at a continued vertical printing with the low coverage data must be changed. **Purpose** The settings must be changed when printing an extensive volume with the vertical A4/Letter of low coverage contents or the toner consumption per driving time is extremely low. **Method** 1. Press the start key. 2. Select the item to set.

Display	Description
Interval	On-Off control of Inter-paper toner ejection
Mode	Setting mode of Inter-paper toner ejection

Setting: [Interval]

1. Select On or Off.

Display	Description
On	Inter-paper toner ejection is performed
Off	Inter-paper toner ejection is not performed

Initial setting: Off

2. Press the start key. The setting is set.

Setting: [Mode]

1. Change the setting value using the +/- keys or numeric keys.

Display	Description	Setting range	Initial setting
Mode	Inter-paper toner ejection mode	1 to 2	1

* : Mode 1 or Mode 2 is effective when Interval is on.
Mode 1: For usages where the original date includes a low toner coverage or gray background is observed (T7 threshold is 3%).
Mode 2: For environments where printing is seldom made but the machine toggles in warm-up mode. (Mostly scanning is used such as in a show room.)
(T7 threshold 3% + simplified refreshing is implemented after the warm-up calibration)

2. Press the start key. The setting is set.

Completion

Press the stop key. The screen for selecting a maintenance item No. is displayed.

Item No.	Description
U326	**Setting the black line cleaning indication**

Description
Sets whether to display the cleaning guidance when detecting the black line.
Purpose
Displays the cleaning guidance in order to make the call for service with the black line decrease by the rubbish on the contact glass when scanning from the DP.

Method
1. Press the start key.
2. Select the item to set.

Display	Description
Black Line Mode	Black line cleaning guidance ON/OFF setting
Black Line Cnt	Setting counts of the cleaning guidance indication

Setting: [Black Line Mode]
1. Select On or Off.

Display	Description
On	Displays the cleaning guidance
Off	Not to display the cleaning guidance

Initial setting: On
2. Press the start key. The setting is set.

Setting: [Black Line Cnt]
1. Change the setting value using the +/- keys or numeric keys.

Display	Description	Setting range	Initial setting
Cnt	Setting counts of the cleaning guidance indication (x 1000 sheets)	0 to 255	8

When setting is 0, the black line cleaning indication is displayed only if the black line is detected.
2. Press the start key. The value is set.

Completion
Press the stop key. The screen for selecting a maintenance item No. is displayed.

Item No.	Description
U327	**Setting the cassette heater control** **Description** Sets the cassette heater control. **Purpose** To change the setting according to the machine installation environment. **Setting** 1. Press the start key. 2. Select the item to set.. Initial setting: Off 3. Press the start key. The setting is set. **Completion** Press the stop key. The screen for selecting a maintenance item No. is displayed.

Display	Description
Mode1	Setting On when the humidity is 65%. (when sleep mode and waiting mode)
Mode2	Setting On in full-time. (when sleep mode and waiting mode)
Off	Cassette heater OFF

Item No.	Description
U332	**Setting the size conversion factor** **Description** Sets the coefficient of nonstandard sizes in relation to the A4/Letter size. The coefficient set here is used to convert the black ratio in relation to the A4/Letter size and to display the result in user simulation.Make settings on the color copy and color print coverage counter displays, as well as the coverage threshold. **Method** 1. Press the start key. 2. Select the item to set. **Display** / **Description** Rate — Size coefficient Mode — Toggling full-color count and color coverage count display Level 1 — Low coverage threshold value Level 2 — Middle coverage threshold value **Setting: [Rate]** **Purpose:** To set the coefficient for converting the black ratio for nonstandard sizes in relation to the A4/Letter size. 1. Change the setting using the +/-keys or numeric keys. **Display** / **Description** / **Setting range** / **Initial setting** Rate / Size coefficient / 0.1 to 3.0 / 1.0 2. Press the start key. The value is set. **Setting: [Mode]** **Purpose:** Make settings on the color copy and color print color/coverage (average of CMY) counter displays. 1. Select the mode. **Display** / **Description** 0 — Full-color count display 1 — Color coverage count display Initial setting: 0 * : If ‘0’ has been changed to ‘1’, revert the U260 feed/eject counter switch to its initial state (Eject). 2. Press the start key. The setting is set. **Setting: [Level 1/2]** **Purpose:**Setting the coverage (average of CMY) thresholds to segment the color count depending on the density level of 1, 2, and 3, for the counters of color copying and color printing. * : The coverage threshold will be used to categorize the following counters when using U920. Color Copy(H), Color Copy(M), Color Copy(L) Color Prn(H), Color Prn(M), Color Prn(L)

<table>
<tr><th>Item No.</th><th>Description</th></tr>
<tr><td>U332</td><td>
1. Select the item.
2. Change the setting using the +/-keys or numeric keys.
<table>
<tr><th>Display</th><th>Description</th><th>Setting range</th><th>Initial setting</th></tr>
<tr><td>Level 1</td><td>Low coverage threshold value</td><td>0.1 to 99.8</td><td>1.0</td></tr>
<tr><td>Level 2</td><td>Middle coverage threshold value</td><td>0.1 to 99.9</td><td>2.5</td></tr>
</table>
Press the start key. The value is set.
Completion
Press the stop key. The screen for selecting a maintenance item No. is displayed.
</td></tr>
<tr><td>U340</td><td>
Setting the applied mode

Description
Allocates memory to ensure that there is sufficient memory available for the printer to use as a working area.
Purpose
Modify the memory allocation if insufficient memory for transparency support or XPS direct printing occurs.

Method
1. Press the start key.
2. Select the item to set.
<table>
<tr><th>Display</th><th>Description</th></tr>
<tr><td>Adj Memory</td><td>Setting the memory allocation</td></tr>
<tr><td>Adj Max Job</td><td>Setting the maximum of multiple jobs</td></tr>
</table>
Setting: [Adj Memory]
1. Change the setting using the +/- keys or numeric keys.
<table>
<tr><th>Display</th><th>Description</th><th>Setting range</th><th>Initial setting</th></tr>
<tr><td>Image</td><td>Area temporarily used to create output image.</td><td>-100 to 100 (MB)</td><td>0</td></tr>
</table>
Set the values below in case print failure occurs with the memory shortage.
(recommended value)
Image : +100
1. Press the start key. The value is set.
2. Turn the main power switch off and on. Allow more than 5 seconds between Off and On.

Supplement
The work area for copy is small and it may cause output failure if the values are large.
</td></tr>
</table>

<table>
<tr><th>Item No.</th><th>Description</th></tr>
<tr><td>U340</td><td>
Setting: [Adj Max Job]
1. Change the setting using the +/-keys or numeric keys.
<table>
<tr><th>Display</th><th>Description</th><th>Setting range</th><th>Initial setting</th></tr>
<tr><td>Copy</td><td>Maximum copy (Scan To Print) Jobs</td><td>10 to 50</td><td>10</td></tr>
<tr><td>Printer</td><td>Maximum printer (Host To Print) Jobs</td><td>-</td><td>50</td></tr>
</table>
The maximum Printer jobs should be (maximum jobs) – (maximum copy jobs).
Press the start key. The value is set.
Completion
Press the stop key. The screen for selecting a maintenance item No. is displayed.
</td></tr>
<tr><td>U341</td><td>
Specific paper feed location setting for printing function

Description
Sets a paper feed location specified for printer output (only if a printer kit is installed).
Purpose
To use a paper feed location only for printer output.
A paper feed location specified for printer output cannot be used for copy output.

Method
1. Press the start key.
2. Select the paper feed location for the printer.
* : Two or more cassette can be selected.
<table>
<tr><th>Display</th><th>Description</th></tr>
<tr><td>Cassette1</td><td>Cassette 1</td></tr>
<tr><td>Cassette2</td><td>Cassette 2</td></tr>
<tr><td>Cassette3</td><td>Cassette 3 (paper feeder/large capacity feeder)</td></tr>
<tr><td>Cassette4</td><td>Cassette 4 (paper feeder/large capacity feeder)</td></tr>
<tr><td>Cassette5</td><td>Cassette 5 (side multi tray/side deck)</td></tr>
<tr><td>Cassette6</td><td>Cassette 6 (side paper feeder/side large capacity feeder)</td></tr>
<tr><td>Cassette7</td><td>Cassette 7 (side paper feeder/side large capacity feeder)</td></tr>
</table>
Initial setting: Off (Cassette1 to 7)
* : When an optional paper feed device is not installed, the corresponding count is not displayed.
3. Press the start key. The setting is set.

Completion
Press the stop key. The screen for selecting a maintenance item No. is displayed.
</td></tr>
</table>

Item No.	Description
U343	**Switching between duplex/simplex copy mode** **Description** Switches the initial setting between duplex and simplex copy. **Purpose** To be set according to frequency of use: set to the more frequently used mode. **Setting** 1. Press the start key. 2. Select On or Off. Display: On — Description: Duplex copy Display: Off — Description: Simplex copy Initial setting: Off 3. Press the start key. The setting is set. **Completion** Press the stop key. The screen for selecting a maintenance item No. is displayed.
U345	**Setting the value for maintenance due indication** **Description** Sets when to display a message notifying that the time for maintenance is about to be reached, by setting the number of copies that can be made before the current maintenance cycle ends. When the difference between the number of copies of the maintenance cycle and that of the maintenance count reaches the set value, the message is displayed. **Purpose** To change the time for maintenance due indication. **Setting** 1. Press the start key. 2. Change the setting using the +/- keys or numeric keys. Display: Cnt — Description: Time for maintenance due indication (Remaining number of copies that can be made before the current maintenance cycle ends) — Setting range: 0 to 9999 — Initial setting: 0 3. Press the start key. The value is set. **Completion** Press the stop key. The screen for selecting a maintenance item No. is displayed.

Item No.	Description
U346	**Selecting Sleep Mode** **Description** Switches configurations for sleep modes. **Purpose** Use this to switch configurations for sleep modes. **Method** 1. Press the start key. 2. Select the item to set. **Setting** 1. Press the start key. 2. Select On or Off. Initial setting: On 3. Press the start key. The setting is set. **Completion** Press the stop key. The screen for selecting a maintenance item No. is displayed.

Display	Description
BAM	Settings for BAM applicable countries

Display	Description
On	Transition to sleep mode is deactivated from the system menu.
Off	Transition to sleep mode is activated from the system menu.

Item No.	Description
U402	**Adjusting margins of image printing**

Description
Adjusts margins for image printing.
Purpose
Make the adjustment if margins are incorrect.

Adjustment
1. Press the start key.
2. Press the system menu key.
3. Press the start key to output a test pattern.
4. Press the system menu key.
5. Select the item to be adjusted.

Display	Description	Setting range	Initial setting	Change in value per step
Lead	Printer leading edge margin	0.0 to 10.0	4.0	0.1 mm
A Margin	Printer left margin	0.0 to 10.0	3.0	0.1 mm
C Margin	Printer right margin	0.0 to 10.0	3.0	0.1 mm
Trail	Printer trailing edge margin	0.0 to 10.0	3.9	0.1 mm

6. Change the setting value using the +/- keys or numeric keys.
   Increasing the value makes the margin wider, and decreasing it makes the margin narrower.

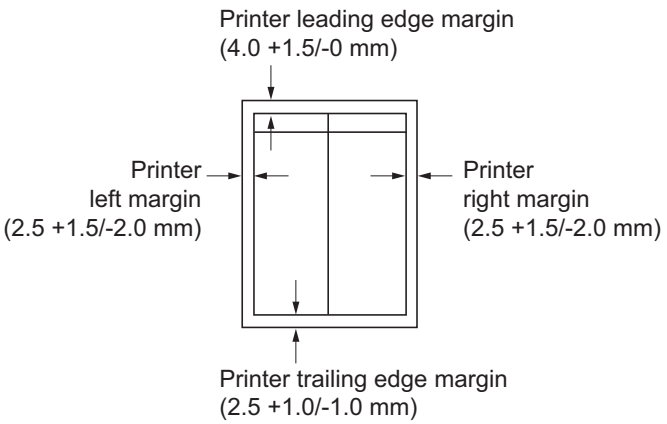

Figure 1-3-40

7. Press the start key. The value is set.

Caution
If the above adjustment does not optimize the margins, perform the following maintenance modes.

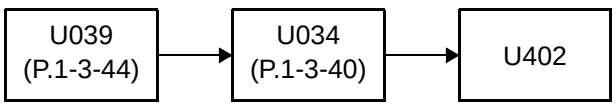

Completion
Press the stop key. The screen for selecting a maintenance item No. is displayed.

Item No.	Description
U403	**Adjusting margins for scanning an original on the contact glass**

Description
Adjusts margins for scanning the original on the contact glass.
Purpose
Make the adjustment if margins are incorrect.

Adjustment
1. Press the start key.
2. Press the system menu key.
3. Place an original and press the start key to make a test copy.
4. Press the system menu key.
5. Select the item to be adjusted.

Display	Description	Setting range	Initial setting	Change in value per step
A Margin	Scanner left margin	0.0 to 10.0	2.0	0.5 mm
B Margin	Scanner leading edge margin	0.0 to 10.0	2.0	0.5 mm
C Margin	Scanner right margin	0.0 to 10.0	2.0	0.5 mm
D Margin	Scanner trailing edge margin	0.0 to 10.0	2.0	0.5 mm

6. Change the setting value using the +/- keys or numeric keys.
   Increasing the value makes the margin wider, and decreasing it makes the margin narrower.

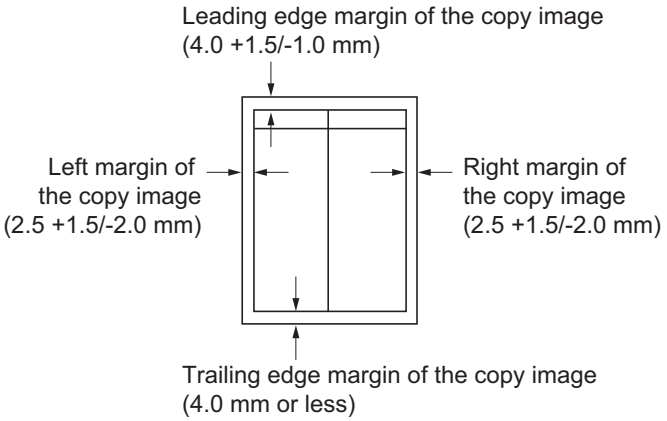

Figure 1-3-41

7. Press the start key. The value is set.

Caution
If the above adjustment does not optimize the margins, perform the following maintenance modes.

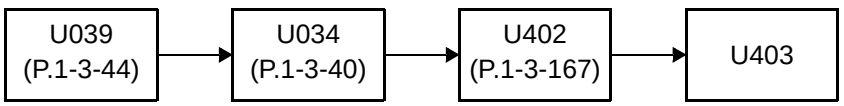

Completion
Press the stop key. The indication for selecting a maintenance item No. appears.

Item No.	Description
U404	**Adjusting margins for scanning an original from the DP**

Description
Adjusts margins for scanning the original from the DP.
Purpose
Make the adjustment if margins are incorrect.

Adjustment
1. Press the start key.
2. Press the system menu key.
3. Place an original on the DP and press the start key to make a test copy.
4. Press the system menu key.
5. Select the item to be adjusted.

Display	Description	Setting range	Initial setting	Change in value per step
A Margin	DP left margin	0.0 to 10.0	3.0	0.5 mm
B Margin	DP leading edge margin	0.0 to 10.0	2.5	0.5 mm
C Margin	DP right margin	0.0 to 10.0	3.0	0.5 mm
D Margin	DP trailing edge margin	0.0 to 10.0	4.0	0.5 mm
A Margin (Back)*	DP left margin (second side)	0.0 to 10.0	3.0	0.5 mm
B Margin (Back)*	DP leading edge margin (second side)	0.0 to 10.0	2.5	0.5 mm
C Margin (Back)*	DP right margin (second side)	0.0 to 10.0	3.0	0.5 mm
D Margin (Back)*	DP trailing edge margin (second side)	0.0 to 10.0	4.0	0.5 mm

* : Dual scan DP only

6. Change the setting value using the cursor left/right keys or numeric keys.
   Increasing the value makes the margin wider, and decreasing it makes the margin narrower.

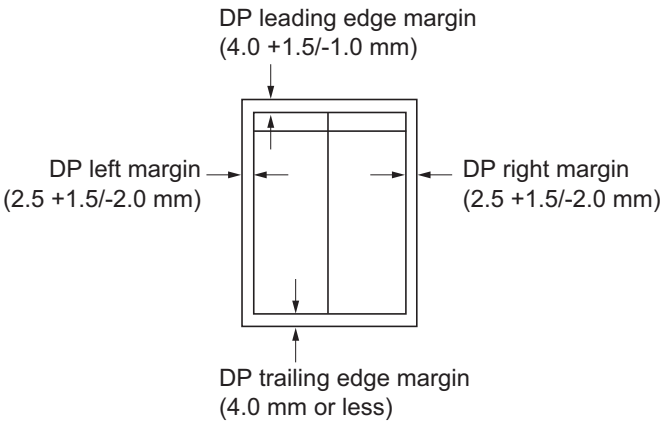

Figure 1-3-42

7. Press the start key. The value is set.

Item No.	Description
U404	**Caution** If the above adjustment does not optimize the margins, perform the following maintenance modes. U039 (P.1-3-44) → U034 (P.1-3-40) → U402 (P.1-3-167) → U403 (P.1-3-168) → U404 **Completion** Press the stop key. The screen for selecting a maintenance item No. is displayed.

Item No.	Description
U407	**Adjusting the leading edge registration for memory image printing**

Description
Adjusts the leading edge registration during memory copying.
Purpose
Make the following adjustment if there is a regular error between the leading edge of the copy image on the front face and that on the reverse face during duplex switchback copying.

Caution
Before making this adjustment, ensure that the following adjustments have been made in maintenance mode

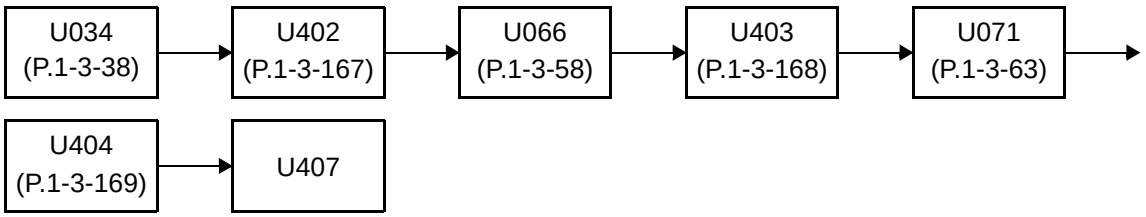

Adjustment
1. Press the start key.
2. Press the system menu key.
3. Place an original and press the start key to make a test copy.
4. Press the system menu key.

Display	Description	Setting range	Initial setting	Change in value per step
Adj Data	Leading edge registration for memory image printing	-47 to 47	0	0.1 mm

5. Change the setting value using the +/- keys or numeric keys.
   For copy example 1, decrease the value. For copy example 2, increase the value.

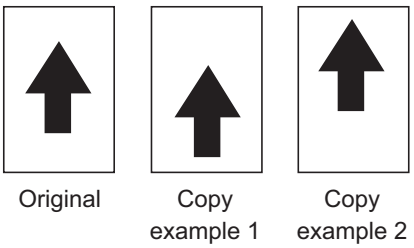

Figure 1-3-43

6. Press the start key. The value is set.

Completion
Press the stop key. The screen for selecting a maintenance item No. is displayed.

Item No.	Description
U410	**Adjusting the halftone automatically**

Description
Carries out processing for the data acquisition that is required in order to perform either automatic adjustment of the halftone or the ID correction operation.
Purpose
Performed when the quality of reproduced halftones has dropped.

Method
1. Press the start key.
2. Select the item.

Display	Description
Normal Mode	Executing the automatic adjustment of the halftone (continuous adjustment)

Method: [Normal Mode]
1. Select [Normal Mode].
2. Press the start key. A test patterns 1, 2 and 3 are outputted.
3. Place the output test pattern 1 as the original.
   Place approximately 20 sheets of white paper on the test pattern 1 and set them.
4. Press the start key.
   Adjustment is made (first time).
5. Place the output test pattern 2 as the original.
   Place approximately 20 sheets of white paper on the test pattern 2 and set them.
6. Press the start key.
   Adjustment is made (second time).
7. Place the output test pattern 3 as the original.
   Place approximately 20 sheets of white paper on the test pattern 3 and set them.
8. Press the start key.
   Adjustment is made (third time).
9. When normally completed, [Finish] is displayed.
   If a problem occurs during auto adjustment, error code is displayed.

Error codes

Codes	Description	Codes	Description
S001	Patch not detected	E001	Engine status error
S002	Original deviation in the main scanning direction	E002	Engine sensor error
		EFFF	Engine other error
S003	Original deviation in the auxiliary scanning direction	C001	Controller error
		C100	Adjustment value error
S004	Original inclination error	C200	Adjustment value error
S005	Original type error	CFFF	Controller other error
SFFF	Scanner other error		

Completion
Press the stop key. The screen for selecting a maintenance item No. is displayed.

Item No.	Description
U411	**Adjusting the scanner automatically** **Description** Uses a specified original and automatically adjusts the following items in the scanner and the DP scanning sections. **Purpose** To perform automatic adjustment of various items in the scanner and the DP scanning sections. Perform adjustments using a new test chart (chart 1) when replacing ISC PWB, LED lamp PWB, ISU, CIS and/or DP main PWB. * : To automatically adjust the DP, to avoid damaging original documents, using a Chart 2-2 test chart is recommended.Method **Method** 1. Press the start key. 2. Select the item.

Display	Description	Original to be used for adjustment	
		P/N	Chart image
Table (Chart1)	Adjusting the scanner color and centering and timing for the leading edge	7505000005	Chart 1 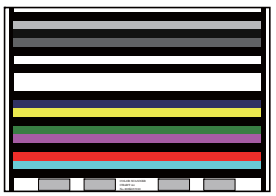
DP FaceUp (Chart1)	Adjusting color, centering, and timing for the leading edge of the reading unit (fore side) of the DP		
DP FaceDown (Chart1)	Adjusting color and retrieval of the target data of the reading unit (back side) of the DP (CIS)		
Table (Chart2)	Adjusting the scanner color and centering and timing for the leading edge	302FZ56990	Chart 2-1 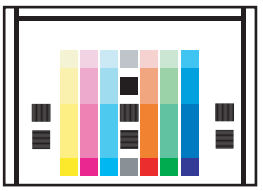
DP FaceUp (Chart2)	Adjusting the scanner centering and timing for the leading edge	302AC68243	Chart 2-2 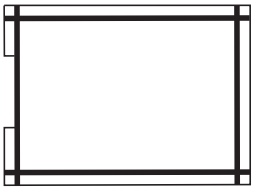
DP FaceDown (Chart2)	Adjusting retrieval of the target data of the reading unit (back side) of the DP (CIS)		
	Adjusting color and retrieval of the target data of the reading unit (back side) of the DP (CIS)	303JX57010	GAMMMA 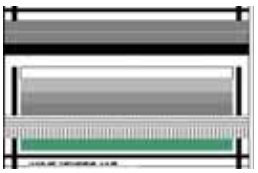
		303JX57020	MATRIX 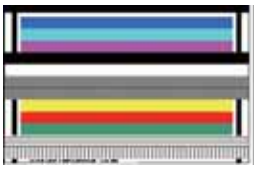

Item No.	Description
U411	

Display	Description	Note
Target	Set-up for obtaining the target value	Select Auto to automatically read and enter the target values using the Chart 1 test chart Initial setting: U425
DP Auto Adj	Automatic adjustment of automatic document processor using the chart printed from the machine	Execute this mode when the Chart 2-2 (302AC68243) is not available

Method: [Table (Chart1)
To perform table adjustment using Chart1.

To automatically enter the target value
* : Select this option for normal use.

1. Set a Chart1 original (P/N: 7505000005) on the platen.
2. Enter maintenance item U411.
3. Select [Target].
4. Select [Auto] and press the start key.
5. Select [Table (Chart1)].
6. Select the item.
   * : Select All for normal use.

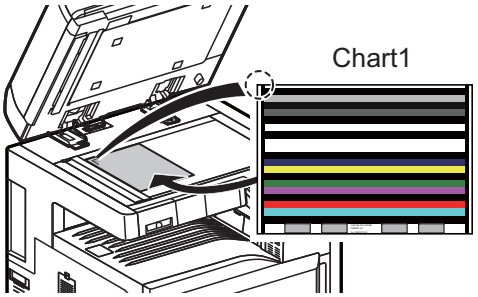

Figure 1-3-44

Display	Description
All	Executing the all scanner adjustment
LED/AGC	Executing the adjustment for LED light quantity/AGC
White	Executing the white reference compensation coefficient
Input	Executing the adjustment for magnification, leading edge timing and center line
C.A.	Executing the adjustment for chromatic aberration filter
MTF	Executing the adjustment for MTF filter
Gamma	Executing the adjustment for input gamma
Matrix	Executing the adjustment for matrix

Item No.	Description
U411	7. Press the start key. Auto adjustment starts. * : When automatic adjustment has normally completed, [OK] is displayed. If a problem occurs during auto adjustment, error code is displayed and operation stops. Should this happen, determine the details of the problem and repeat the procedure from the beginning (P.1-3-217). * : If the target values are not obtainable automatically, manually enter the following target values in the following manner and perform adjustment. 1. Enter the target values which are shown at the bottom of the chart1 original (P/N: 7505000005) executing maintenance item U425. 2. Set a chart1 original on the platen. 3. Enter maintenance item U411. 4. Select [Target]. 5. Select [U425] and press the start key. 6. Select [Table (Chart1)]. 7. Select the item. * : Select All for normal use. 8. Press the start key. Auto adjustment starts. **Method: [DP FaceUp (Chart1)]** **To perform adjustment on the first side of the DP using Chart 1.** To automatically enter the target value. 1. Set a chart1 original (P/N: 7505000005) on the DP face up. 2. Enter maintenance item U411. 3. Select [Target]. 4. Select [Auto] and press the start key. 5. Select [DP FaceUp (Chart1)]. 6. Select [Input]. **Display** / **Description** Input / Executing the adjustment for input gamma and matrix 7. Press the start key. Auto adjustment starts. * : When automatic adjustment has normally completed, [OK] is displayed. If a problem occurs during auto adjustment, error code is displayed and operation stops. Should this happen, determine the details of the problem and repeat the procedure from the beginning (P.1-3-217).

<table>
<tr><th>Item No.</th><th>Description</th></tr>
<tr><td>U411</td><td>
* : If the target values are not obtainable automatically, manually enter the following target values in the following manner and perform adjustment.
1. Enter the target values which are shown at the bottom of the chart1original (P/N: 7505000005) executing maintenance item U425.
2. Set a specified original on the DP face up.
3. Enter maintenance item U411.
4. Select [Target].
5. Select [U425] and press the start key.
6. Select [DP FaceUp (Chart1)].
7. Select [Input].
8. Press the start key. Auto adjustment starts.

Method: [DP FaceDown (Chart1)]
To perform adjustment on the second side of the DP using Chart 1.
To automatically enter the target value

1. Set a specified original (P/N: 7505000005) on the DP face down.
2. Enter maintenance item U411.
3. Select [Target].
4. Select [Auto] and press the start key.
5. Select [DP FaceDown (Chart1)].
6. Select [All].
<table>
<tr><th>Display</th><th>Description</th></tr>
<tr><td>All</td><td>Executing the adjustment in the DP scanning section (second side) for magnification, leading edge timing, center line, MTF filter, input gamma and matrix</td></tr>
</table>
7. Press the start key. Auto adjustment starts.
* : When automatic adjustment has normally completed, [OK] is displayed. If a problem occurs during auto adjustment, error code is displayed and operation stops. Should this happen, determine the details of the problem and repeat the procedure from the beginning (P.1-3-217).

* : If the target values are not obtainable automatically, manually enter the following target values in the following manner and perform adjustment.
1. Enter the target values which are shown at the bottom of the specified original (P/N: 7505000005) executing maintenance item U425.
2. Set a specified original on the DP face down.
3. Enter maintenance item U411.
4. Select [Target].
5. Select [U425] and press the start key.
6. Select [DP FaceDown (Chart1)].
7. Select [All].
8. Press the start key. Auto adjustment starts.
</td></tr>
</table>

Item No.	Description
U411	**Method: [Table (Chart2)]**

1. Enter the target values which are shown on the back of the Chart 2-1 original (P/N: 302FZ56990) executing maintenance item U425.
2. Set a Chart 2-1original on the platen.
3. Enter maintenance item U411.
4. Select [Target].
5. Select [U425] and press the start key.
6. Select [Table (Chart2)].
7. Select the item.

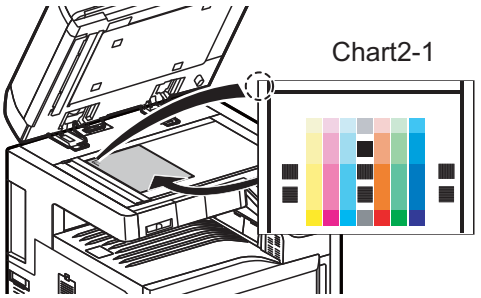

Figure 1-3-45

Display	Description
All	Executing the all scanner adjustment
Input	Executing the adjustment for magnification, leading edge timing and center line
C.A.	Executing the adjustment for chromatic aberration filter
MTF	Executing the adjustment for MTF filter
Gamma	Executing the adjustment for input gamma
Matrix	Executing the adjustment for matrix

8. Press the start key. Auto adjustment starts.
   * : When automatic adjustment has normally completed, [OK] is displayed. If a problem occurs during auto adjustment, error code is displayed and operation stops. Should this happen, determine the details of the problem and repeat the procedure from the beginning (P.1-3-217).

Item No.	Description
U411	**Method: [DP FaceUp (Chart2)]**

1. Set a specified original (P/N: 302AC68243) on the DP.
   Cut the trailing edge of the original.

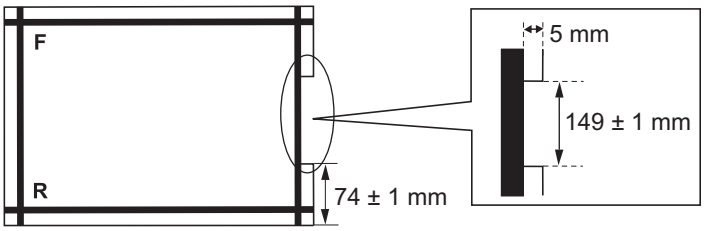

Figure 1-3-46

2. Enter maintenance item U411.
3. Select [Target].
4. Select [U425] and press the start key.
5. Select [DP FaceUp (Chart2)].
6. Select [INPUT].

Display	Description
Input	Executing the adjustment in the DP scanning section (first side) for magnification, leading edge timing and center line

7. Press the start key. Auto adjustment starts.
   * : When automatic adjustment has normally completed, [OK] is displayed. If a problem occurs during auto adjustment, error code is displayed and operation stops. Should this happen, determine the details of the problem and repeat the procedure from the beginning (P.1-3-217).

Method: [DP FaceDown (Chart2)]

1. Place the specified original for acquiring gamma target data (P/N: 303JX57010) on the platen, and press the start key.
2. Place the specified original for acquiring matrix target data (P/N: 303JX57020) on the platen, and press the start key.
   When normally completed, [OK] is displayed.
3. Select the item.

Item No.	Description
U411	

Display	Description	Original to be used for adjustment (P/N)
All	Executing the adjustment in the DP scanning section (second side) for magnification, leading edge timing, center line, MTF filter, input gamma and matrix	302AC68243/ 303JX57010/ 303JX57020
Input	Executing the adjustment in the DP scanning section (second side) for magnification, leading edge timing and center line	302AC68243
MTF/Gamma	Executing the adjustment in the DP scanning section (second side) for MTF filter and input gamma	303JX57010
Matrix	Executing the adjustment in the DP scanning section (second side) for matrix	303JX57020

[Input]
1. Select [Input].
2. Set a Chart 2-2 original (P/N: 302AC6824) on the DP face down.
3. Press the start key. Auto adjustment starts.

[MTF/Gamma]
1. Select [MTF/Gamma].
2. Set a Gamma original (P/N: 303JX57010) on the DP face down.
3. Press the start key. Auto adjustment starts.

[Matrix]
1. Select [Matrix].
2. Set a Matrix original (P/N: 303JX57020) on the DP face down.
3. Press the start key. Auto adjustment starts.

When [ALL] is selected, the adjustment of [Input], [MTF/Gamma] and [Matrix] can be executed at once. When adjusting, place the three specified originals on the DP face down, and then press the start key.
Set the original 303JX57020, and then place 303JX57010 and 302AC68243 in order on the top of the original.

* : When automatic adjustment has normally completed, [OK] is displayed. If a problem occurs during auto adjustment, error code is displayed and operation stops. Should this happen, determine the details of the problem and repeat the procedure from the beginning (P.1-3-217).

Item No.	Description
U411	**Method: [DP Auto Adj]** 1. Load A4/ letter paper. 2. Press the start key to output the original for adjustment. 3. Set the output the original for adjustment and press the start key. 4. Set the output the original for adjustment on the DP face up. 5. Press the start key to scan documents. 6. Press the start key. Auto adjustment of first side starts. 7. Set the output the original for adjustment on the DP face down. 8. Press the start key to scan documents. 9. Press the start key. Auto adjustment of second side starts. * : When automatic adjustment has normally completed, [OK] is displayed. If a problem occurs during auto adjustment, error code is displayed and operation stops. Should this happen, determine the details of the problem and repeat the procedure from the beginning. **Error Codes**

Codes	Description
01	Black band detection error (scanner auxiliary scanning direction leading edge skew)
02	Black band detection error (scanner main scanning direction far end skew)
03	Black band detection error (scanner main scanning direction near end skew)
03	Black band detection error (scanner auxiliary scanning direction trailing edge skew)
04	Black band is not detected (scanner auxiliary scanning direction leading edge)
05	Black band is not detected (scanner main scanning direction far end)
06	Black band is not detected (scanner main scanning direction near end)
07	Black band is not detected (scanner auxiliary scanning direction trailing edge)
08	Black band is not detected (DP main scanning direction far end)
09	Black band is not detected (DP main scanning direction near end)
0a	Black band is not detected (DP auxiliary scanning direction leading edge)
0b	Black band is not detected (DP auxiliary scanning direction leading edge original check)
0c	Black band is not detected (DP auxiliary scanning direction trailing edge)
0d	White band is not detected (DP auxiliary scanning direction trailing edge)
0e	DMA time out
0f	Auxiliary scanning direction magnification error
10	Auxiliary scanning direction leading edge error
11	Auxiliary scanning direction trailing edge error
12	DP uxiliary scanning direction skew error
13	Maintenance request error
14	Main scanning direction center line error

Item No.	Description
U411	**Error Codes**

Codes	Description
15	DP main scanning direction skew error
16	Main scanning direction magnification error
17	Service call error
18	DP paper misfeed error
19	PWB replacement error
1a	Original error
1b	Input gamma adjustment original error
1c	Matrix adjustment original error
1d	Original for the white reference compensation coefficient error
1e	Lab value searching error
1f	Lab value comparing error
63	Completed to obtain a test RAW

Completion

Press the stop key. The screen for selecting a maintenance item No. is displayed.

Item No.	Description
U412	**Adjusting the uneven density** **Description** Adjusts the uneven developer/transfer density in the drum axis direction by scanning directly the density distribution of test pattern with the scanner and adjusting LSU light quantity. **Purpose** To perform when replacing the drum unit or laser scanner unit. When completed, perform maintenance mode U464, Calibration. **Method** 1. Press the start key. 2. Select the item. **Method: [Normal Mode]** 1. Select [Default Value]. A test pattern is outputted with the initial light quantity setting. (1st sheet) 2. Place approximately 20 sheets of white paper on the output test pattern and place as the original. 3. Press the start key. the correction starts. 4. After the correction is completed, and press the start key. A test pattern is outputted. (2nd sheet) A test pattern is outputted with light quantity setting lower than the 1st test pattern by 20%. 5. Place approximately 20 sheets of white paper on the output test pattern and place as the original. 6. Press the start key. the correction starts. 7. After the correction is completed, and press the start key. A test pattern is outputted. (3rd sheet) 8. Place approximately 20 sheets of white paper on the output test pattern and place as the original. 9. Press the start key. The correction result is checked. When normally completed, [OK] is displayed. **Retry (1st time)** 10. If the correction is not completed normally, [Retry] is displayed. 11. Repeat steps 4 and 9. **Retry (2nd time)** 12. If the correction is not completed normally, [Retry] is displayed. 13. Repeat steps 4 and 9. If a problem occurs during auto correction, error code is displayed.

Display	Description
Normal Mode	Executing the uneven density correction
On/Off Config	Uneven density correction ON/OFF setting

Item No.	Description
U412	

Error codes

Codes	Description	Codes	Description
S001	Patch not detected	E001	Engine status error
S002	Original deviation in the main scanning direction	E002	Spotted background error
		E003	Density error
S003	Original deviation in the auxiliary scanning direction	E004	Uneven density error
		EFFF	Engine other error
S004	Original inclination error	C001	Controller error
S005	Original type error	CFFF	Controller other error
SFFF	Scanner other error		

Setting: [On/Off Config]

1. Select On or Off.

Display	Description
On	Uneven density correction is enabled
Off	Uneven density correction is disabled

* : Initial setting: Off

* : ON is automatically set after the correction is complete.

2. Press the start key. The setting is set.

Completion

Press the stop key. The screen for selecting a maintenance item No. is displayed.

Item No.	Description
U415	**Adjusting the print position automatically** **Description** Automatically adjusts timings at the print engine. Adjustment for leading edge timing, center line and margin. **Purpose** Used to make respective auto adjustments for the print engine. * : Execute this mode when the Chart 2-2 (302AC68243) is not available. **Method** 1. Load A3/ledger paper. Load A4/Letter when the large capacity feeder is used. 2. Press the start key. 3. Select [Execute]. 4. Press the start key. A test pattern is outputted 5. Set the output test pattern as the original. 6. Press the start key. Automatically Perform adjustment from the top to bottom cassettes. 7. When normally completed, [OK] is displayed. If a problem occurs during auto adjustment, error code is displayed. **Error Codes** **Completion** Press the stop key. The screen for selecting a maintenance item No. is displayed.

Codes	Description
S001	Black band is not detected (main scanning direction far end)
S002	Black band is not detected (main scanning direction near end)
S003	Black band is not detected (auxiliary scanning direction leading edge)
S004	Black band is not detected (auxiliary scanning direction trailing edge)
S005	Auxiliary scanning direction skew error (1.5 mm or more)
S006	Main scanning direction skew error (1.5 mm or more)
S007	Original error (detection of reverse original paper)
S008	Original error (page mismatch)
SFFF	Scanner other error
C101	Adjustment value error (main scanning direction magnification)
C102	Adjustment value error (auxiliary scanning direction magnification)
C103	Adjustment value error (leading edge timing)
C104	Adjustment value error (center line)
C105	Adjustment value error (B margin)
C106	Adjustment value error (A margin)
C107	Adjustment value error (C margin)
C108	Adjustment value error (D margin)
CFFF	Controller other error

Item No.	Description
U425	**Setting the target** **Description** Enters the lab values that is indicated of the chart 1 (P/N: 7505000005) or chart 2 (P/N: 302FZ56990) used for adjustment. **Purpose** Perform data input in order to correct for differences in originals during automatic adjustment. **Method** 1. Press the start key. 2. Select the chart to be used. 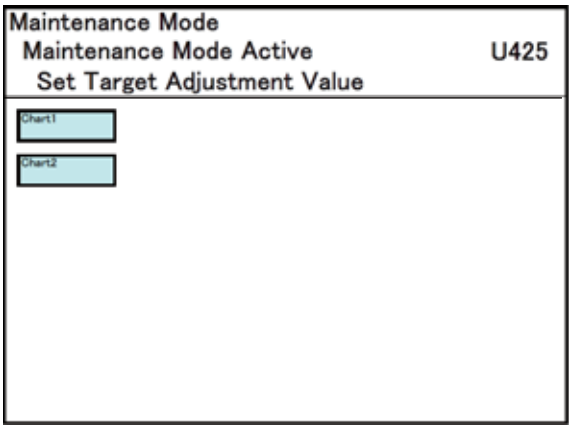 **Figure 1-3-47**

Display	Description	Chart image
Chart1	Chart 1 (P/N: 7505000005)	Chart1 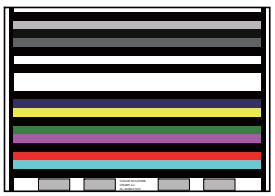
Chart2	Chart 2 (P/N: 302FZ56990)	Chart2-1 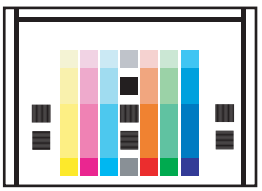

Method: [Chart1]
1. Press the start key.
2. Select the item to be set.

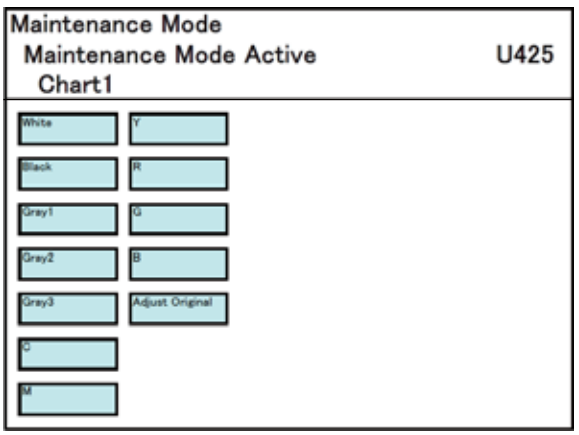

Figure 1-3-48

Item No.	Description
U425	

Display	Description
White	Setting the white patch for the original for adjustment
Black	Setting the black patch for the original for adjustment
Gray1	Setting the Gray1 patch for the original for adjustment
Gray2	Setting the Gray2 patch for the original for adjustment
Gray3	Setting the Gray3 patch for the original for adjustment
C	Setting the cyan patch for the original for adjustment
M	Setting the magenta patch for the original for adjustment
Y	Setting the yellow patch for the original for adjustment
R	Setting the red patch for the original for adjustment
G	Setting the green patch for the original for adjustment
B	Setting the blue patch for the original for adjustment
Adjust Original	Setting the main and auxiliary scanning directions

Setting: [White, Black, Gray1, Gray2, Gray3, C, M, Y, R, G, B]

1. Read the Lab values for the items selected on Chart 1.

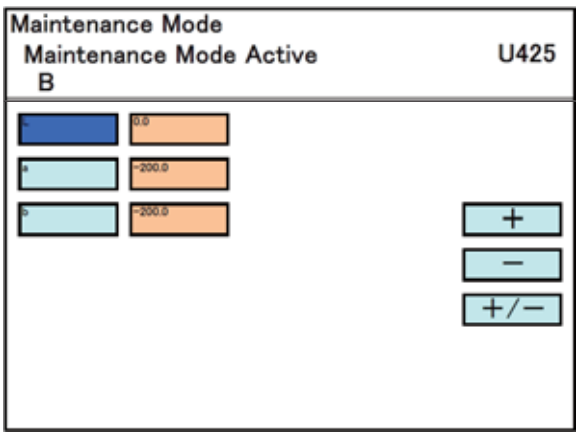

Figure 1-3-49

3. Enters the value that is indicated on the face of the chart using the +/- keys or numeric keys.
4. Press the start key. The value is set.

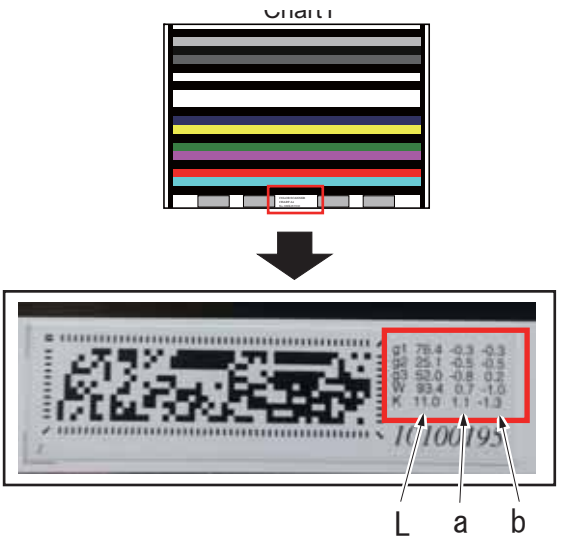

Figure 1-3-50

Item No.	Description
U425	

Display	Description	Setting range
L	Setting the L value	0.0 to 100.0
a	Setting the a value	-200.0 to 200.0
b	Setting the b value	-200.0 to 200.0

Setting: [Adjust Original]

* : This setting is usually unnecessary.

1. Press the start key.

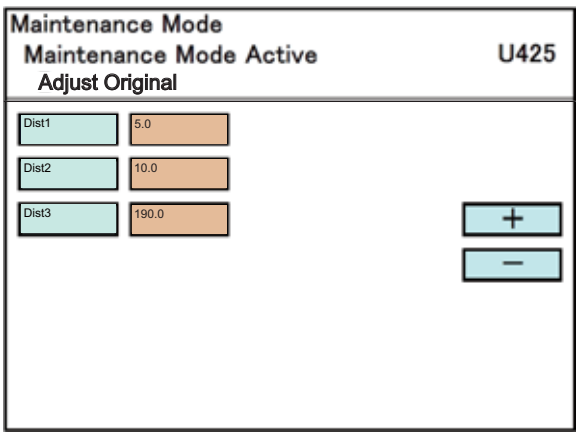

Figure 1-3-51

Display	Description	Setting range	Initial setting	Change in value per step
Dist1	Measure the distance from the leading edge to the top of black belt 1 of the original	4.0 to 6.0	5.0	0.1mm
Dist2	Measure the distance from the left edge to the right edge black belt 2 of the original	9.0 to 11.0	10.0	
Dist3	Measure the distance from the top edge of black belt 1 to the bottom of black belt 3 of the original	189.0 to 191.0	190.0	

Item No.	Description
U425	2. Measure the distance from the leading edge to the top of black belt 1 of the original at A, B and C. Measurement procedure 1) Measure the distance from the leading edge to the top of black belt 1 of the original at A (30 mm from the left edge), B (148.5 mm from the left edge) and C (267 mm from the left edge), respectively. 2) Apply the following formula for the values obtained: ((A + B + C) / 3) 3. Enter the values solved using the cursor left/right keys or numeric keys in [Dist1]. 4. Press the start key. The value is set. 5. Measure the distance from the left edge to the right edge black belt 2 of the original at F. Measurement procedure 1) Measure the distance from the left edge to the right edge black belt 2 of the original at F (15 mm from the top edge of black belt 1). 6. Enter the values using the cursor left/right keys or numeric keys in [Dist2]. 7. Press the start key. The value is set. 8. Measure the distance from the top edge of black belt 1 to the bottom of black belt 3 of the original at D and E. 1) Measure the distance from the top edge of black belt 1 to the bottom of black belt 3 of the original at D (30 mm from the left edge) and E (267 mm from the left edge), respectively. 2) Apply the following formula for the values obtained: (D/2 + E/2) 9. Enter the measured value using the cursor left/right keys or numeric keys in [Dist3]. 10. Press the start key. The value is set. 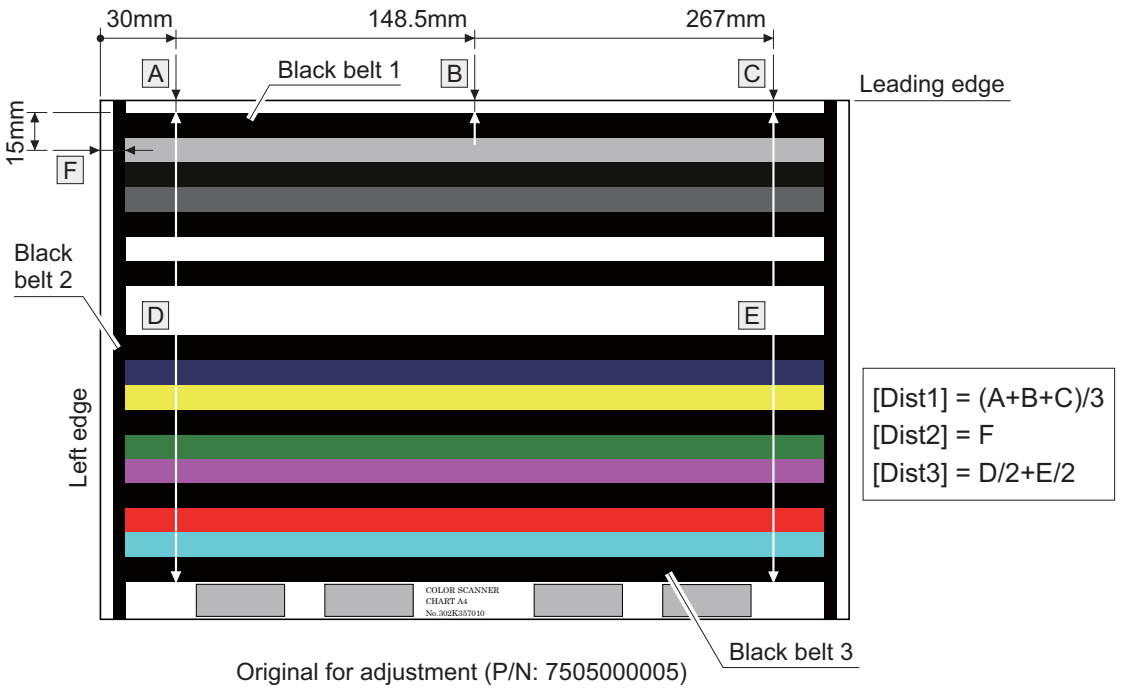 **Figure 1-3-52**

Item No.	Description
U425	**Method: [Chart2]** 1. Press the start key. 2. Select the item. 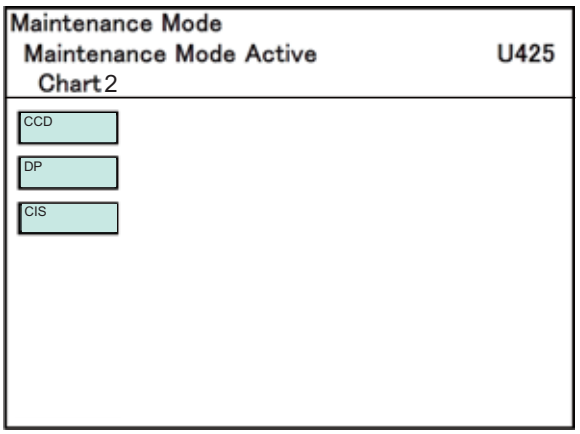 **Figure 1-3-53** **Method: [CCD]** 1. Press the start key. 2. Select the item to be set. 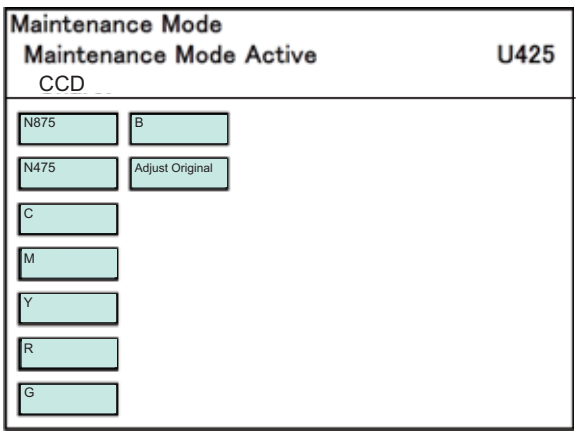 **Figure 1-3-54**

Display	Description
CCD	Entering the target values of the chart 2-1 (P/N: 302FZ56990) used for adjustment
DP	Entering the measurement value of the chart 2-2 (P/N: 302AC68243) used for adjustment
CIS	Execution is not required

Item No.	Description
U425	

Display	Description
N875	Setting the N875 patch for the original for adjustment
N475	Setting the N475 patch for the original for adjustment
N125	Setting the N125 patch for the original for adjustment
C	Setting the cyan patch for the original for adjustment
M	Setting the magenta patch for the original for adjustment
Y	Setting the yellow patch for the original for adjustment
R	Setting the red patch for the original for adjustment
G	Setting the green patch for the original for adjustment
B	Setting the blue patch for the original for adjustment
Adjust Original	Setting the main and auxiliary scanning directions

Setting: [N875, N475, N125, C, M, Y, R, G, B]

1. Read the Lab values for the items selected on the back of the Chart 2-1 test chart.

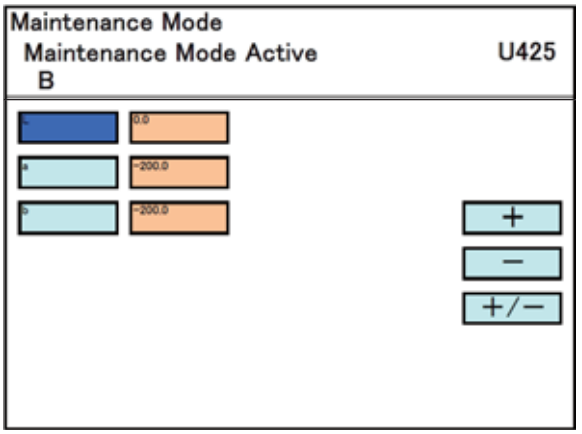

Figure 1-3-55

2. Enters the value that is indicated on the back of the chart using the +/- keys or numeric keys.
3. Press the start key. The value is set.

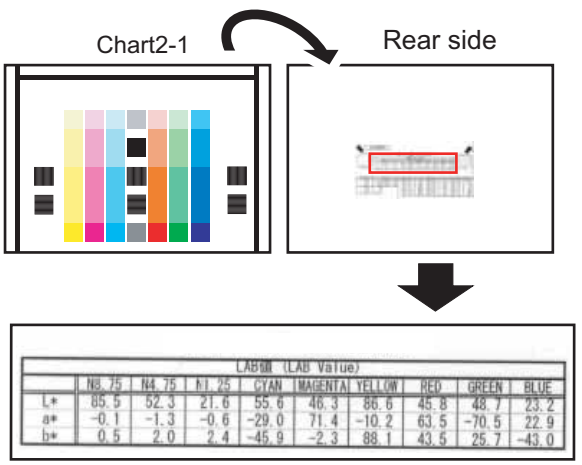

	N8.75	N4.75	N1.25	CYAN	MAGENTA	YELLOW	RED	GREEN	BLUE
L*	85.5	52.3	21.6	55.6	46.3	86.6	45.8	48.7	23.2
a*	-0.1	-1.3	-0.6	-29.0	71.4	-10.2	63.5	-70.5	22.9
b*	0.5	2.0	2.4	-45.9	-2.3	88.1	43.5	25.7	-43.0

Figure 1-3-56

Item No.	Description
U425	

Display	Description	Setting range
L	Setting the L value	0.0 to 100.0
a	Setting the a value	-200.0 to 200.0
b	Setting the b value	-200.0 to 200.0

Setting: [Adjust Original]

* : This setting is usually unnecessary.

1. Press the start key.

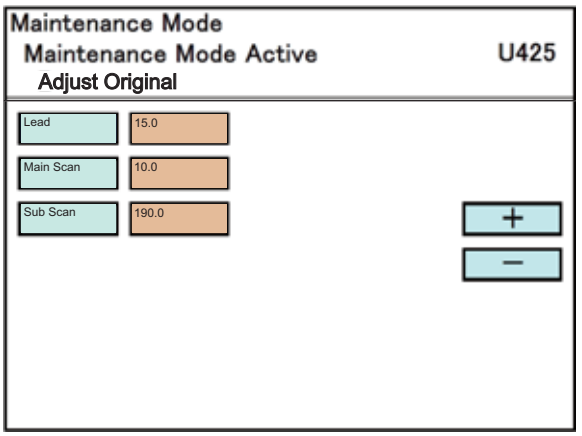

Figure 1-3-57

Display	Description	Setting range	Initial setting	Change in value per step
Lead	Measure the distance from the left edge to the black belt (a) of the original	14.0 to 16.0	15.0	0.1mm
Main Scan	Measure the distance from the leading edge to the black belt (b) of the original	9.0 to 11.0	10.0	
Sub Scan	Measure the length from the edge of the black belt (a) to edge of N475 of the original	189.0 to 191.0	190.0	

Item No.	Description
U425	2. Measure the distance from the leading edge to the top of black belt 1 of the original at A, B and C. Measurement procedure 1) Measure the distance from the leading edge to the top of black belt 1 of the original at A (30 mm from the left edge), B (148.5 mm from the left edge) and C (267 mm from the left edge), respectively. 2) Apply the following formula for the values obtained: ((A + B + C) / 3) 3. Enter the values solved using the cursor left/right keys or numeric keys in [Dist1]. 4. Press the start key. The value is set. 5. Measure the distance from the left edge to the right edge black belt 2 of the original at F. Measurement procedure 1) Measure the distance from the left edge to the right edge black belt 2 of the original at F (15 mm from the top edge of black belt 1). 6. Enter the values using the cursor left/right keys or numeric keys in [Dist2]. 7. Press the start key. The value is set. 8. Measure the distance from the top edge of black belt 1 to the bottom of black belt 3 of the original at D and E. 1) Measure the distance from the top edge of black belt 1 to the bottom of black belt 3 of the original at D (30 mm from the left edge) and E (267 mm from the left edge), respectively. 2) Apply the following formula for the values obtained: (D/2 + E/2) 9. Enter the measured value using the cursor left/right keys or numeric keys in [Dist3]. 10. Press the start key. The value is set. 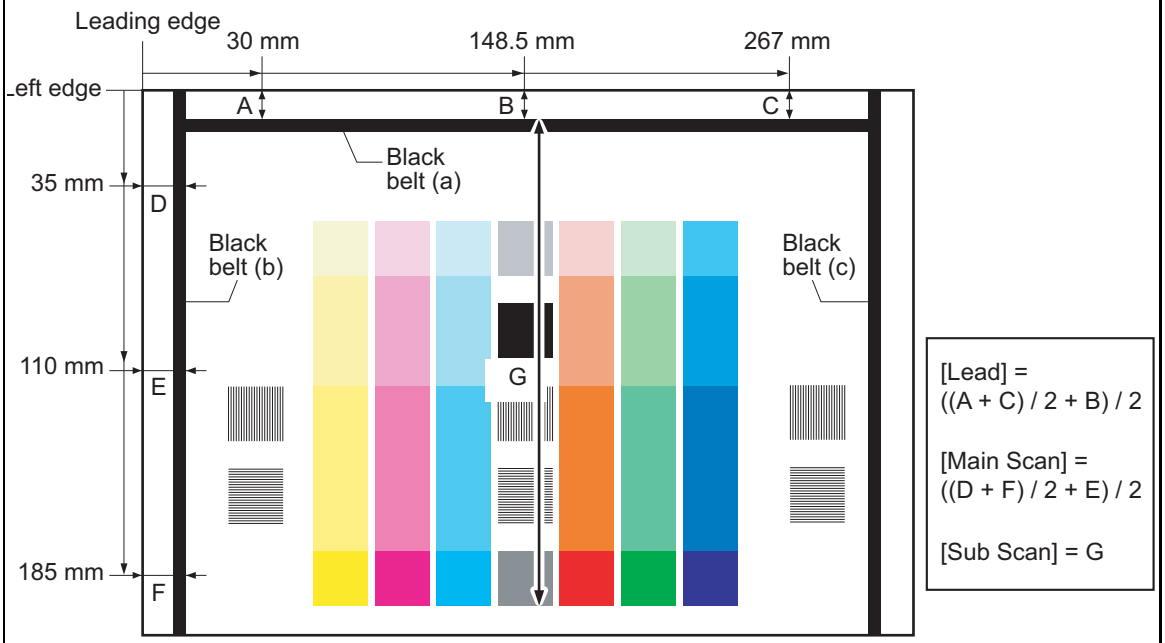 Original for adjustment (P/N: 302FZ56990) **Figure 1-3-58**

Item No.	Description
U425	

Setting: [DP]

* : This setting is usually unnecessary.

1. Press the start key.
2. Enters the value that is indicated on the face of the chart using the +/- keys or numeric keys.

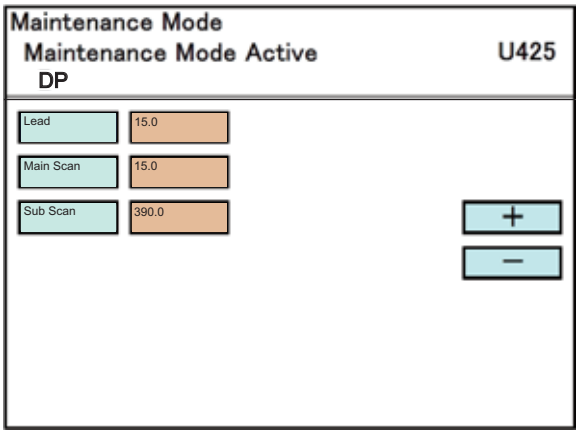

Figure 1-3-59

Display	Description	Setting range	Initial setting	Change in value per step
Lead	Measure the distance from the leading edge to the black belt (inside) of the original	14.0 to 16.0	15.0	0.1mm
Main Scan	Measure the distance from the left edge to the black belt (inside) of the original	14.0 to 16.0	15.0	
Sub Scan	Measure the distance from the black belt of leading edge (inside) to the black belt of trailing edge (inside) of the original	388.0 to 392.0	390.0	

3. Press the start key. The value is set.

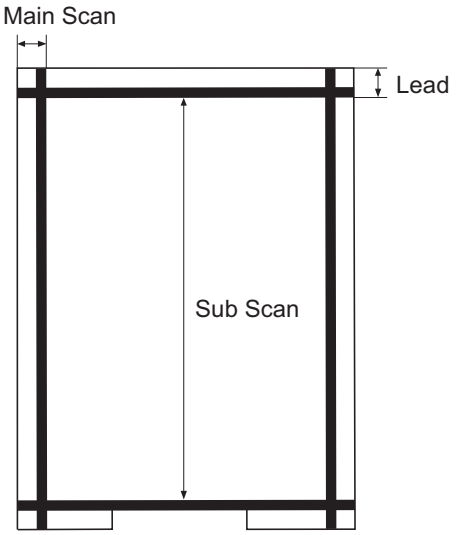

Original for adjustment Chart 2-2 (P/N: 302AC68243)

Figure 1-3-60

Completion

Press the stop key. The screen for selecting a maintenance item No. is displayed.

Item No.	Description
U429	**Setting the offset for the color balance** **Description** Displays and changes the density for each color during copying in the various image quality modes. **Purpose** To change the balance for each color. **Method** 1. Press the start key. 2. Select the image quality mode. **Setting** 1. Select the item to be set. 2. Change the setting value using the +/- keys or numeric keys. *: When selecting [Copy/Printout] Increasing the value darkens the density and decreasing it lightens the density. 3. Press the start key. The value is set. **Supplement** While this maintenance item is being executed, copying from an original is available in interrupt copying mode (which is activated by pressing the system menu key). **Completion** Press the stop key. The screen for selecting a maintenance item No. is displayed.

Display	Description
Text+Photo	Density of each color in the text & photo mode
Photo	Density of each color in the photo mode
Photo/Printout	Density of each color in the printed photo mode
Text	Density of each color in the text mode
Graphics/Map	Density of each color in the map mode
Copy/Printout	Density of each color in the printed document mode

Display	Description	Setting range	Initial setting
C	Value of the cyan setting	-5 to 5 (0 to 10*)	0
M	Value of the magenta setting	-5 to 5 (0 to 10*)	0
Y	Value of the yellow setting	-5 to 5 (0 to 10*)	0
K	Value of the black setting	-5 to 5 (0 to 10*)	0

Item No.	Description
U460	**Adjusting the conveying sensor** **Description** Compensates the threshold value of the side multi tray's multi feed sensor. **Purpose** If more than one sheet is fed at a time, modify the threshold depending on the environment. **Method** 1. Press the start key. 2. Select the item. **Display** / **Description** SMT* / Settings of multiple feed sensor on the side multi tray ***:** 45 ppm/55 ppm model only. **Method: [SMT]** 1. Select the item. **Display** / **Description** Conveying Sensor / Multi feed sensor settings/Calibration On/Off Config / Multi feed sensor On/Off settings **Setting: [Conveying Sensor]** 1. Select the item. **Display** / **Description** Sensor(Non-P) / Empty paper sensor display Sensor / Displaying sensor value when paper is present Threshold(Single) / Paper feeding threshold settings Threshold(Multi) / Multi feed threshold settings Execute / Executing the calibration

Item No.	Description
U460	**Setting: [Threshold(Single)/(Multi)]** 1. Select the item. 2. Change the setting value using the +/- keys or numeric keys. **Display** / **Description** / **Setting range** / **Initial setting** Threshold(Single) / Paper feeding threshold settings / 0 to 254 / 0 Threshold(Multi) / Multi feed threshold settings / 0 to 254 / 0 3. Press the start key. The value is set. **Method: [Execute]** 1. Select [Execute]. Press the start key. Calibration is executed. **Setting: [On/Off Config]** 1. Select On or Off. **Display** / **Description** On / Multi feed sensor is enabled Off / Multi feed sensor is disabled Initial setting: Off 2. Press the start key. The setting is set. **Completion** Press the stop key. The screen for selecting a maintenance item No. is displayed.

Item No.	Description
U464	**Setting the ID correction operation** **Description** Turn ID correction (calibration) on or off. Also, this allows individual settings for calibration operation. **Purpose** Implements various settings of calibration when poor image quality is caused or to allow various settings of calibration depending on the user preference. To perform the calibration when replacing the maintenance kit. **Method** 1. Press the start key. 2. Select the item to be set.

Display	Description
Permission	Setting to turn calibration on/off
Time Interval	Setting the interval time of calibration after printing
Mode	Setting the color print execution mode
On/Sleep Out*	Setting execution parameters for calibration when powered up or reverted from auto-sleep
AP/NE*	Paper interval calibration ON/OFF setting at the time of calibration/near end after toner feed
Leaving Time*	Setting the standard time for judging whether or not to carry out calibration based on the sleep time when the machine recovers from the sleep mode
Driving Time*	Setting the standard time for judging whether or not to carry out paper interval calibration based on the driving time during printing
Timing*	Setting the standard time for judging whether or not to carry out calibration based on the continuous print driving time during printing
Target Value	Setting the sensor target values for toner thick layer calibration and light amount calibration
Print Rate(B/W)*	Setting the proportion of black/white printing at which black/white calibration is executed during color printing.
Calib	Executing the calibration
Solid Image	Reduces toner retention at trailing edges when printing high-density half and solid images. (automatic calibration is implemented after settings are completed)

*: Enabled when Mode is set to Custom.

Setting: [Permission]

1. Select On or Off.

Display	Description
On	Turn calibration ON
Off	Turn calibration OFF

Initial setting: On

Item No.	Description
U464	2. Press the start key. The setting is set. **Setting: [Time Interval]** 1. Change the setting value using the +/- keys or numeric keys. **Display** / **Description** / **Setting range** / **Initial setting** Time(sec) / Setting the interval time of calibration / 0 to 9999 (s) / 480 2. Press the start key. The value is set. **Setting: [Mode]** 1. Select the item. **Display** / **Description** Short / Setting the color print execution mode: short Normal / Setting the color print execution mode: normal Long / Setting the color print execution mode: long Custom / Setting the color print execution mode: custom Auto / Setting the color print execution mode: auto Initial setting: Normal 2. Press the start key. The setting is set. **Setting: [On/Sleep Out]** 1. Select On or Off. **Display** / **Description** On / At power-up: Perform calibration if the fusing temperature is less than 50°C/122°F. Recovering from Auto Sleep: Calibration is performed when 8 hours have passed since the machine has been in sleep Off / Not to execute calibration regardless of fuser temperature at power-up or recovery from auto sleep mode Initial setting: On 2. Press the start key. The setting is set. **Setting: [AP/NE]** 1. Select On or Off. **Display** / **Description** On / Paper interval calibration at the time of calibration/near end after toner feed is carried out Off / Paper interval calibration at the time of calibration/near end after toner feed is not carried out Initial setting: On 2. Press the start key. The setting is set.

Item No.	Description
U464	

Setting: [Leaving Time]

1. Change the setting value using the +/- keys or numeric keys.

Display	Description	Setting range	Initial setting
Time(min)	Setting the standard time of sleep mode	0 to 480 (min)	480

2. Press the start key. The value is set.

Setting: [Driving Time]

1. Change the setting value using the +/- keys.

Display	Description	Setting range	Initial setting
Time(sec)	Setting the drive standard time	300 to 3000 (s)	300

2. Press the start key. The value is set.

Setting: [Timing]

1. Change the setting value using the +/- keys.

Display	Description	Setting range	Initial setting
Time(sec)	Setting the drive standard time of continuous print	0 to 3600 (s)	3600

2. Press the start key. The value is set.

Setting: [Target Value]

1. Select the item.
2. Change the setting value using the +/- keys or numeric keys.

Display	Description	Setting range	Initial setting			
			30ppm	35ppm	45ppm	55ppm
Thickness(C)	Toner thick layer calibration (cyan)	0 to 1000	910	910	910	910
Thickness(M)	Toner thick layer calibration (magenta)	0 to 1000	890	890	890	890
Thickness(Y)	Toner thick layer calibration (yellow)	0 to 1000	910	910	910	910
Thickness(K)	Toner thick layer calibration (black)	0 to 1000	130	130	130	130
Gamma(C)	Light amount calibration (cyan)	0 to 500	320	320	320	320
Gamma(M)	Light amount calibration (magenta)	0 to 500	320	320	320	320
Gamma(Y)	Light amount calibration (yellow)	0 to 500	300	300	300	300
Gamma(K)	Light amount calibration (black)	0 to 500	350	350	350	350

3. Press the start key. The value is set.

<table>
<tr><th>Item No.</th><th>Description</th></tr>
<tr><td>U464</td><td>

Setting: [Print Rate(B/W)]

1. Change the setting value using the +/- keys or numeric keys.

Display	Description	Setting range	Initial setting
Threshold	Proportion of black/white printing	0 to 100 (%)	50

2. Press the start key. The value is set.

Method: [Calib]

1. Select [Execute].
2. Press the start key. Calibration is executed.

   * : Duplicates selecting [System Menu] - [Adjustment/Maintenance] - [Calibration].
   The same operation as System menu.

Setting: [Solid Image]

1. Select On or Off.

Display	Description
On	Enable smoothing edges
Off	Disable smoothing edges

Initial setting: Off

Press the start key. The setting is set.

Completion

Press the stop key. The screen for selecting a maintenance item No. is displayed.

</td></tr>
<tr><td>U465</td><td>

Data reference for ID correction

Description

References the data related to ID correction.

Purpose

To check the corresponding data.

Method

1. Press the start key.
2. Select the item to be reference.

Display	Description
TCONT	Developer bias control value after ID correction
Laser Power	Scaling factor to the value determined in light amount calibration
Bias Calib	Sensor value for toner thick layer calibration
T7 CTD	T7 control value
Stress	Intermediate transfer belt durability

</td></tr>
</table>

Item No.	Description
U465	**Displaying: [TCOUNT]** Select [TCOUNT]. The current value is displayed.

Display	Description
Before(C)	Developer bias control value for cyan before ID correction
Before(M)	Developer bias control value for magenta before ID correction
Before(Y)	Developer bias control value for yellow before ID correction
Before(K)	Developer bias control value for black before ID correction
After(C)	Developer bias control value for cyan after ID correction
After(M)	Developer bias control value for magenta after ID correction
After(Y)	Developer bias control value for yellow after ID correction
After(K)	Developer bias control value for black after ID correction

Displaying: [Laser Power]

1. Select [Laser Power]. The current value is displayed.

Display	Description
C	Scaling factor to the value determined in light amount calibration (cyan)
M	Scaling factor to the value determined in light amount calibration (magenta)
Y	Scaling factor to the value determined in light amount calibration (yellow)
K	Scaling factor to the value determined in light amount calibration (black)

Displaying: [Bias Calib]

1. Select [Bias Calib]. The current value is displayed.

Display	Description
C	Sensor value for toner thick layer calibration (cyan)
M	Sensor value for toner thick layer calibration (magenta)
Y	Sensor value for toner thick layer calibration (yellow)
K	Sensor value for toner thick layer calibration (black)

Displaying: [T7 CTD]

1. Select [T7 CTD]. The current value is displayed.

Display	Description
C	T7 control value (cyan)
M	T7 control value (magenta)
Y	T7 control value (yellow)
K	T7 control value (black)

<table>
<tr><th>Item No.</th><th>Description</th></tr>
<tr><td>U465</td><td>

Displaying: [Stress]

1. Select [Stress]. The current value is displayed.

Display	Description
Front	Intermediate transfer belt durability (Front)
Rear	Intermediate transfer belt durability (Rear)

Completion

Press the stop key. The screen for selecting a maintenance item No. is displayed.

</td></tr>
<tr><td>U467</td><td>

Setting the color registration adjustment

Description

Sets the color registration adjustment and transfer belt speed correction. Also, determines the conditions by which color registration correction is executed depending on the LSU temperature.

Purpose

If color variance is uneven due to a sensor failure, etc., turn this off and temporarily make a manual adjustment.

Method

1. Press the start key.
2. Select the item to be set.

Display	Description
Color Regist	Setting the color registration correction operation
Timing	After the previous correction is executed, color registration is compensated as the LSU temperature varies by the value determined.

Setting: [Color Regist]

1. Select On or Off.

Display	Description
On	Enables the color registration correction operation.
Off	Disables the color registration correction operation.

Initial setting: On

* : Reset all values of [Auto] and [Manual] in U468 to zero in the following procedure.
Select On(default) >[Off] and press [OK] key. Select > [On] and press [OK] key.

2. Press the start key. The setting is set.

Setting: [Timing]

1. Change the setting value using the +/- keys or numeric keys.

Display	Description	Setting range	Initial setting
Timing	Conditions for execution depending on the LSU temperature variation	2 to 10	10

2. Press the start key. The value is set.

Completion

Press the stop key. The screen for selecting a maintenance item No. is displayed.

</td></tr>
</table>

Item No.	Description
U468	**Checking the color registration data** **Description** Displays the color registration correction data and transfer belt speed correction data. **Purpose** To check the corresponding data. **Method** 1. Press the start key. 2. Select the item to be reference.

Display	Description
V Correction	Display the transfer speed adjustment value
Auto(C)	Display the auto color registration adjustment value for cyan
Auto(M)	Display the auto color registration adjustment value for magenta
Auto(Y)	Display the auto color registration adjustment value for yellow
Manual(C)	Display the manual color registration adjustment value for cyan
Manual(M)	Display the manual color registration adjustment value for magenta
Manual(Y)	Display the manual color registration adjustment value for yellow

Displaying: [V Correction]

1. Select [V Correction]. The current value is displayed.

Display	Description
Status	transfer speed adjustment value

Displaying: [Auto(C)/Auto(M)/Auto(Y)]

1. Select [Auto(C)], [Auto(M)] or [Auto(Y)]. The current value is displayed.

Display	Description
Main Scan	Auto color registration adjustment value of the main scanning direction
Sub Scan	Auto color registration adjustment value of the auxiliary scanning direction
Magnification	Auto color registration adjustment value of the magnification

Displaying: [Manual(C)/Manual(M)/Manual(Y)]

1. Select [Manual(C)], [Manual((M)] or [Manual((Y)]. The current value is displayed.

Display	Description
Main Scan	Manual color registration adjustment value of the main scanning direction
Sub Scan	Manual color registration adjustment value of the auxiliary scanning direction
Magnification 1-6	Manual color registration adjustment value of the magnification 1-6

Item No.	Description
U468	**Completion** Press the stop key. The screen for selecting a maintenance item No. is displayed.
U469	**Adjusting the color registration** **Description** Perform the color registration correction and transfer belt speed correction. **Purpose** To perform when replacing the maintenance kit or laser scanner unit. **Method** 1. Press the start key. 2. Select the item. **Method: [Auto]** 1. Select [Print]. 2. Press the start key. A chart for adjustment is outputted. 3. Set the output chart for adjustment as the original. 4. Select [Execute]. 5. Press the start key. Color registration correction starts. 6. When normally completed, [OK] is displayed. If a problem occurs during auto adjustment, error code is displayed.

Display	Description
Auto	Executing the auto color registration correction
Manual	Executing the manual color registration correction
Belt Initialize	Executing the transfer belt speed correction
Belt Check	Confirmation of transfer belt position

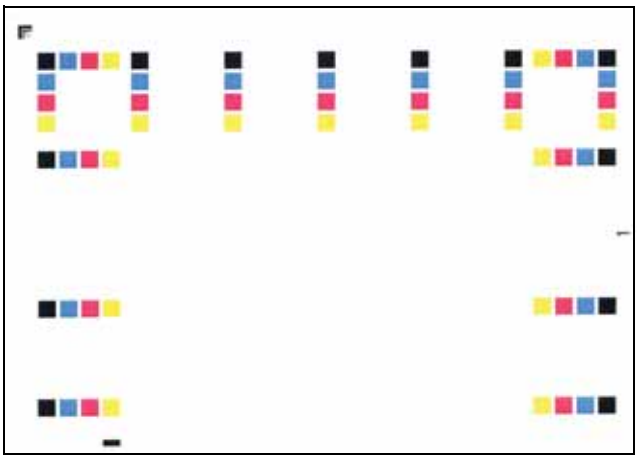

Chart for adjustment

Figure 1-3-61

Item No.	Description
U469	

Error codes

Codes	Description	Codes	Description
S001	Patch not detected	S004	Original inclination error
S002	Original deviation in the main scanning direction	S005	Original type error
		SFFF	Scanner other error
S003	Original deviation in the auxiliary scanning direction	E001	Engine state error
		CFFF	Controller other error

Method: [Manual]

1. Select [Print].
2. Press the start key. A chart for adjustment is outputted.
3. Select [Regist].
4. Read figures at MH-1 to 7/CH-1 to 7/YH-1 to 7 and MV-3/CV-3/YV-3 of the reference chart and enter the figure marked at the scale which the BK fine line is in line with the M/C/Y fine lines, using the # key or * key.

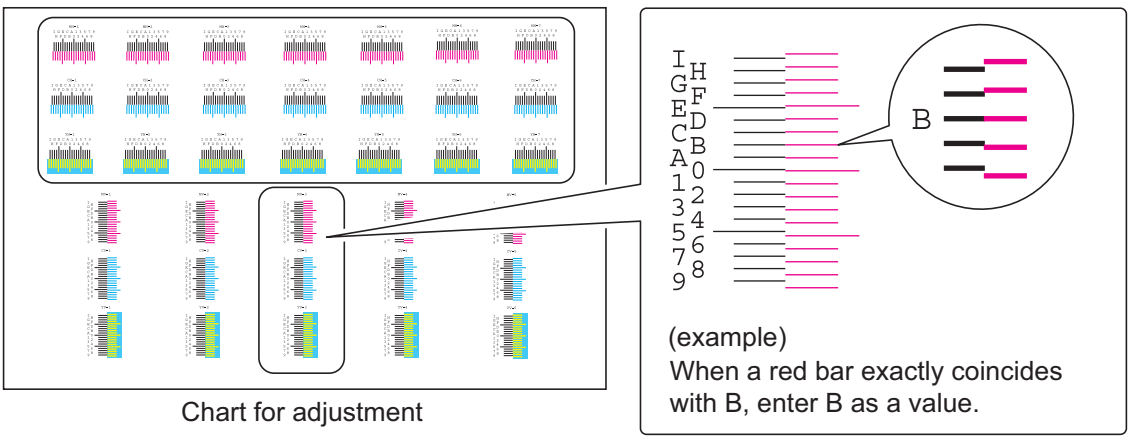

Chart for adjustment

Figure 1-3-62

5. Press the start key. The value is set.
6. Press the start key after all values have been entered. Color registration correction starts.
7. Print a chart for adjustment.
8. Verify that each scale is within the range of 1to A.

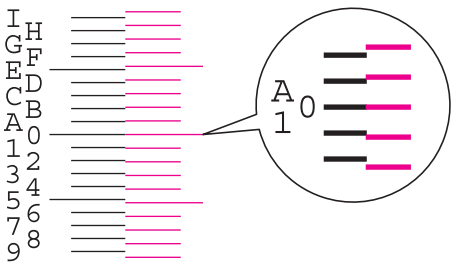

The scale must be corresponding within the range of "A" from "1".

Figure 1-3-63

Item No.	Description
U469	**Method: [Belt Initialize]** 1. Select [Execute]. 2. Press the start key. Transfer belt speed correction starts. **Method:[Belt Check]** 1. Select [Mode].. 2. Select [Execute]. 3. Press the start key. Transfer belt position confirmation starts, and the value is displayed. **Completion** Press the stop key. The screen for selecting a maintenance item No. is displayed. **Precheck before replacing the intermediate transfer belt** Upon the occurrence of C2770, check the angle of belt meandering and replace the intermediate transfer belt unit. **[How to check]** 1. Select [Mode]. 2. Setting the [B/W]. 3. Select [Execute]. 4. Press the start key. 5. Check the value of [Angle].

Display	Description
Angle	Display of cam position
Belt Position	Display of belt position
Mode	Operational mode
Execute	Execution of belt position confirmation

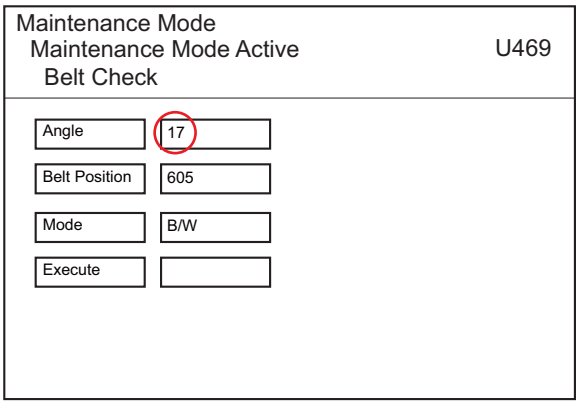

[Criteria]
Angle is from 6 to 26: Replacement is not necessary.
Angle is 5 or less or 27 or more: Replace the belt.

If [Angle] is 5 or less or 27 or more, before replacing the belt, confirm that the waste shutter is not mispositioned on the intermediate transfer belt, draw out the intermediate transfer belt unit, slowly insert the unit again, and retry checking [Angle].

Item No.	Description
U470	**Setting the JPEG compression ratio**

Description
Sets the compression ratio for JPEG images in each image quality mode.
Purpose
To change the setting in accordance with the image that the user is copying. For example, in order to soften the coarseness of the image when making copies at over 200% magnification, change the level of compression by raising the value. Lowering the value will increase the compression and thereby lower the image quality; Raising the value will increase image quality but lower the image processing speed.

Method
1. Press the start key.
2. Select the item to be set.

Display	Description
Copy	Compression ratio for copying
Send	Compression ratio for sending
System	Compression ratio for temporary storage in system

Setting: [Copy]
1. Select the item to be set.

Display	Description
Photo	Compression ratio in the photo mode
Text	Compression ratio in the text mode

2. Select the item to be set.
3. Change the setting value using the +/- keys or numeric keys.

Display	Description	Setting range	Initial setting
Y	Compression ratio of brightness	1 to 100	90
CbCr	Compression ratio of color differential	1 to 100	90

4. Press the start key. The value is set.

Item No.	Description
U470	**Setting: [Send]**

1. Select the item to be set.

Display	Description
Photo	Compression ratio in the photo mode
Text	Compression ratio in the text mode
HC-PDF(BG)	Compression ratio of high compression PDF
HC-PDF(Char)	Setting the compression rate of the high-compression PDF (text color)
HC-PDF(File Size)	Setting the compression rate of the high-compression PDF (reduced file size priority)

2. Select the item to be set.
3. Change the setting value using the +/- keys or numeric keys.
   [Photo] or [Text]

Display	Description	Setting range	Initial setting
Y1 to Y5	Compression ratio of brightness	1 to 100	30/40/51/70/90
CbCr1 to CbCr5	Compression ratio of color differential	1 to 100	30/40/51/70/90

[HC-PDF(BG)]

Display	Description	Setting range	Initial setting
Y3 to Y3	Compression ratio of brightness	1 to 100	15/25/90
CbCr3 to CbCr3	Compression ratio of color differential	1 to 100	15/25/90

[HC-PDF(Char)]

Display	Description	Setting range	Initial setting
Y3 to Y3	Compression ratio of brightness	1 to 100	15/75/90
CbCr3 to CbCr3	Compression ratio of color differential	1 to 100	15/75/90

4. [HC-PDF(File Size)]

Display	Description	Setting range	Initial setting
Y3 to Y3	Compression ratio of brightness	1 to 100	15/25/75
CbCr3 to CbCr3	Compression ratio of color differential	1 to 100	15/25/75

5. Press the start key. The value is set.

<table>
<tr><th>Item No.</th><th>Description</th></tr>
<tr><td>U470</td><td>

Setting: [System]

1. Select the item to be set.
2. Change the setting value using the +/- keys or numeric keys.

Display	Description	Setting range	Initial setting
Y	Compression ratio of brightness	1 to 100	90
CbCr	Compression ratio of color differential	1 to 100	90

3. Press the start key. The value is set.

Supplement

While this maintenance item is being executed, copying from an original is available in interrupt copying mode (which is activated by pressing the system menu key).

Completion

Press the stop key. The screen for selecting a maintenance item No. is displayed.

</td></tr>
<tr><td>U474</td><td>

Checking LSU cleaning operation

Description

Provides cleaning LSU by means of the LSU cleaning motor. Also, the cleaning cycle can be adjusted.

Method

1. Press the start key.
2. Select the item.

Display	Description
Execute	Executing the cleaning operation
Cycle	Setting the cleaning cycle

Method: [Execute]

1. Press the start key. Cleaning the LSU slit glass.

Setting: [Cycle]

1. Select the item.

Display	Description	Setting range	Initial setting
Cnt	Cleaning cycle	0 to 5000	1000
Timing	Setting the timing	-	Print End

Setting: [Cnt]

1. Change the setting value using +/- keys.
   * : The setting can be changed by 1000 per step.
2. Press the start key. The value is set.

</td></tr>
</table>

<table>
<tr><th>Item No.</th><th>Description</th></tr>
<tr><td>U474</td><td>
Setting: [Timing]
1. Select the item.
<table>
<tr><th>Display</th><th>Description</th></tr>
<tr><td>Print</td><td>Execute during a Job</td></tr>
<tr><td>Print End</td><td>Execute after a Job has been completed</td></tr>
</table>
Initial setting: Print End
2. Press the start key. The value is set.

Completion
Press the stop key.
The screen for selecting a maintenance item No. is displayed.
</td></tr>
<tr><td>U485</td><td>
Setting the image processing mode

Description
Sets the detection level for scanning printed matter outputted with the confidential document guard function. Also, sets the process PDF images are rotated.
Purpose
To change the detection level when the confidential document guard is not printed well for detection in scanning. Also, changes the process of how PDF images are rotated.

Method
1. Press the start key.
2. Select the item.
<table>
<tr><th>Display</th><th>Description</th></tr>
<tr><td>Mode</td><td>Setting the image processing mode</td></tr>
<tr><td>Color Table</td><td>Setting the Color Table</td></tr>
</table>
Setting: [Mode]
1. Select the item.
<table>
<tr><th>Display</th><th>Description</th></tr>
<tr><td>Conf. Doc. Detection</td><td>Confidential document guard detection level</td></tr>
<tr><td>PDF Rotation</td><td>Processing the rotation of PDF images</td></tr>
</table>
Setting: [Conf. Doc. Detection]
1. Change the setting value using +/- keys or numeric keys.
<table>
<tr><th>Display</th><th>Description</th><th>Setting range</th><th>Initial setting</th></tr>
<tr><td>Conf. Doc. Detection</td><td>Confidential document guard detection level</td><td>1 to 5</td><td>1</td></tr>
</table>
A smaller value raises the detection sensitivity but increases the possibility of false detection.
A larger value lowers the detection sensitivity but decreases the possibility of false detection.
2. Press the start key. The value is set.
</td></tr>
</table>

Item No.	Description
U485	**Setting: [PDF Rotation]** 1. Change the setting value using +/- keys or numeric keys. Initial setting: 0 2. Press the start key. The value is set. **Setting: [Color Table]** 1. Select the item. **Setting: [Color Table 1(Prn)],[Color Table 2(Prn)]** 1. Default/Custom printer color tables are shown. 2. Press the appropriate button. 3. Press the target button for switching *1: Use TYPE_KY to enable the factory-set color table. *2: sRGB (PC monitor like) 4. Press the Start key and [Complete] is displayed. 5. Press the reset key. 6. Once the screen changes to blue, turn the power switch off and on.

Display	Description
0	Assigns the image rotation with the internal parameter
1	Assigns the image rotation with the actual image
2	Assigns the image rotation with the internal parameter (CTM rotation)

Display	Description
Color Table 1(Prn)	Setting the printer color table (Default)
Color Table 2(Prn)	Setting the printer color table (Custom)
Color Table 1(Copy)	Setting the copy color table (Default)
Color Table 2(Copy)	Setting the copy color table (Custom)
Install	Install the printer color table
Uninstall (Prn)	Uninstall the printer color table
Uninstall (Copy)	Uninstall the copy color table

Display
TYPE_CA
TYPE_FJ
TYPE_HE
TYPE_KO
TYPE_KY*1
TYPE_RH
TYPE_ST*2
TYPE_TO

Item No.	Description
U485	**Setting: [Color Table 1(Copy)],[Color Table 2(Copy)]** 1. Default/Custom printer color tables are shown. 2. Press the appropriate button. 3. Press the target button for switching **Display** CTYPE_A1*1 CTYPE_CA CTYPE_FJ CTYPE_KO CTYPE_KY*2 CTYPE_RH CTYPE_SH CTYPE_TO *1: Similar to existing products. *2: Use CTYPE_KY to enable the factory-set color table. 4. Press the Start key and [Complete] is displayed. 5. Press the reset key. 6. Once the screen changes to blue, turn the power switch off and on. * : If either of Color Table 1(Copy) or Color Table 2(Copy) is set, its name is displayed in the Custom mode under Original Quality for copying. **Setting: [Install]** * : Before proceeding, make sure that the USB flash device that contains the color table files is inserted. The color table files must be placed in the root of the USB flash device. 1. Press the Execute button once it is activated. 2. Press the [Start] key. 3. Installation is completed when [OK] is displayed. **Setting: [Uninstall]** 1. The color table currently being installed is displayed. 2. Select the color table you want to uninstall, then press the Start key. * : You can select more than one file to simultaneously uninstall them. **Completion** Press the stop key. The screen for selecting a maintenance item No. is displayed.

Item No.	Description
U486	**Setting color/black and white operation mode** **Description** When color and B/W documents are mixed, sets operation mode after a color document is detected. **Purpose** To ensure productivity when copying color and B/W documents in ACS mode, select Mode3. However, selecting Mode3 will increase the maintenance count for cyan, magenta, and yellow color developer units even when there is a B/W original after a color original. **Method** 1. Press the start key. 2. Select the item. **Display** / **Description** Mode — Setting color/black and white operation Permission — Permission for Half-speed monochrome printing **[Setting:Mode]** 1. Press the start key. 2. Select the mode. **Display** / **Description** Mode1 — A mode suited for the user with high black-and-white usage in which the occurrence of color printing during continuous printing is minimum. Once diverted to color printing mode, the subsequent black and white printing is executed in the same linear velocity as in color printing with other processings switched on the fly. Mode2 — A mode suited for the user with high black-and-white usage in which the occurrence of color printing during continuous printing is maximum. Printing in color mode resumes up to 9 pages in a row even an interrupt is made to switch to black and white mode, until printing is diverted to black and white mode from color mode at the 10th page (color processing is terminated). Mode3 — A mode suited for the user with high black-and-white usage in which the occurrence of color printing during continuous printing is maximum. Mode suited for high color printing volume Once diverted to color mode, the black and white printings are executed in color processing mode (including the linear velocity). Auto — Mode that allows to select from modes 1 through 3 depending on the usage. Mode is selected from three modes depending on the percentage of color and black and white printings in the total number of print pages during a predetermined period. Initial setting: Mode2 3. Press the start key. The setting is set.

Item No.	Description
U486	**[Setting:Permission]** 1. Press the start key. 2. Select On or Off

Display	Description
On	Permission : monochrome printing * 1 (3 colors release)
Off	Prohibition : color printing (4-color press)

Initial setting: Off

* : When the background of printing on envelope is colored , set On.
If perform it , there is a possibility that the jitter occurs.

Completion

Press the stop key. The screen for selecting a maintenance item No. is displayed.

Details on the modes

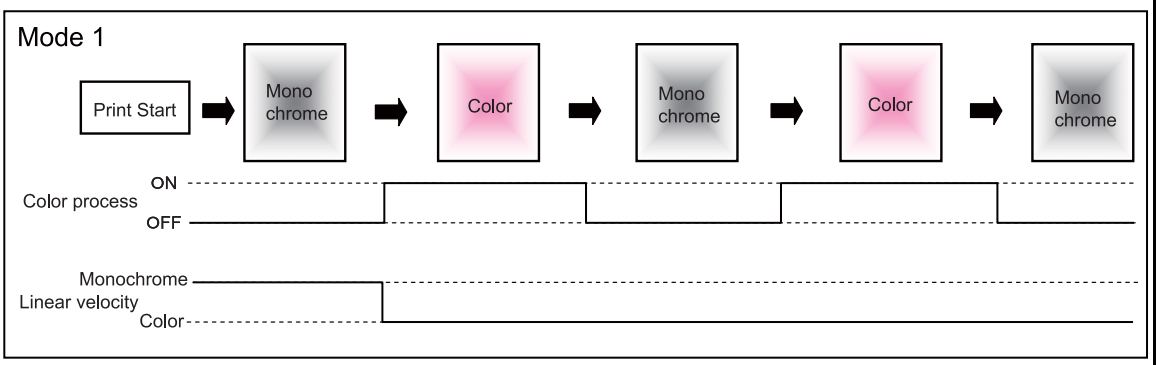

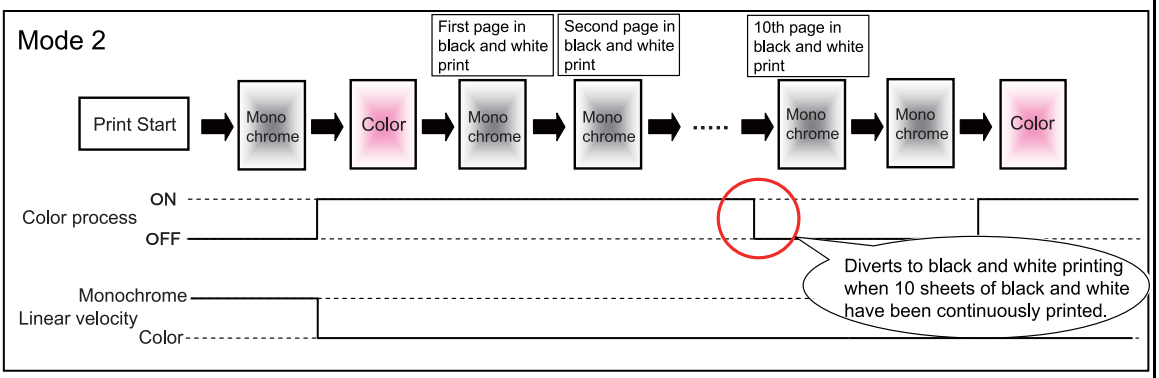

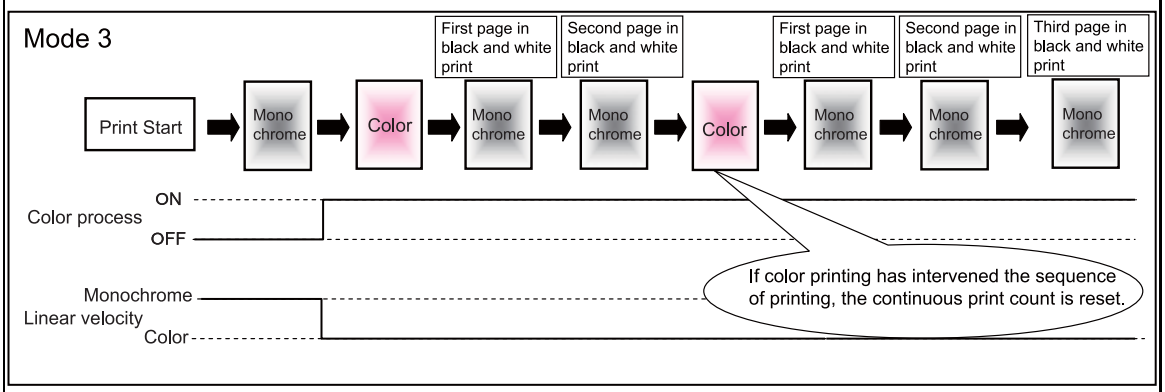

Figure 1-3-64

Item No.	Description
U520	**Set TDRS** **Description** Perform TDRS settings and information views. **Purpose** Perform TDRS settings and information views. **Method** 1. Press the start key. 2. Select the item.

Display	Description
Registration	Transition to the TDRS Manager registering dialog
Information	Transition to the Device Agent description dialog
On/Off Config	Transition to the TDRS features dialog

Setting: [Registration]

1. Select the item.

Display	Description
TDRS User	Registering process using user and password
Access Code	Registering process using an Access Code

Setting: [Access Code]

1. Select the item.

Display	Description
Regist	Performing registration to TDRS Manager
TDRS Server	TDRS Server URL
TDRS User	TDRS Username
Access Code	TDRS Access Code
Proxy Server	TDRS Proxy Server URL
Proxy Port	TDRS Proxy Port Number
Proxy User	TDRS Proxy Username
Text	TDRS Description

* : The status of Online or Offline will be indicated at the right bottom depending on connection with TDRS Manager.
The Regist button is inoperative if the USB is not installed.
A normal completion will be indicated by Complete in the status of the item that was performed.
An occurrence of an error is indicated by an error number in the status of the item that was performed.
If [User/Processing Registration using a Password] is selected in the previous dialog, the TDRS User will be indicated.
If [Processing Registration using an Access Code] is selected, the Access Code will be indicated.

Item No.	Description
U520	**Error Codes**

Codes	Description	Codes	Description
e0001	HDD is unavailable.	t0001	Fatal error.
e0002	USB memory is unavailable.	t0002	Error in processing the network.
e0003	The file to import does not exist in the USB.	t0003	An illegal parameter error.
e0004	Reading from the USB has failed.	t0004	Insufficient resource.
e0005	Unmounting USB has failed.	t0005	Communication error.
e0006	Moving or renaming the file has failed.	t0006	Error in processing communication.
e0007	Opening the file has failed.	t0007	Login error.
e0008	Closing the file has failed.	t0008	External error.
e0009	Error in reading the file.	t0009	Authentication error.
e000A	Copying the file has failed.	t000A	Request error.
e000B	Opening the directory has failed.	t000B	Error due to the server.
e00C	Creating a working directory has failed.	t00C	Error due to the client.
e00D	Deleting a working file has failed.		

Setting: [Information]

1. Select the item.

Display	Description
Agent ID	Agent ID
Agent Type	Agent Type
Model	model name
Serial No	Serial number

Setting: [On/Off Config]

1. Select the item.

Display	Description
On	Enable TDRS
Off	Disable TDRS

Completion

Press the stop key. The screen for selecting a maintenance item No. is displayed.

Item No.	Description
U901	**Checking copy counts by paper feed locations** **Description** Displays or clears paper feed counts by paper feed locations. Perform backup when the counters on the engine PWB and PF main PWB do not match. **Purpose** To check the time to replace consumable parts. Also to clear the counts after replacing the consumable parts. Backup the counter values after completing changing the PF main PWB and the paper feed unit. **Method** 1. Press the start key. The counts by paper feed locations are displayed.

Display	Description
MPT	MP tray
Cassette1	Cassette 1
Cassette2	Cassette 2
Cassette3	Cassette 3 (paper feeder/large capacity feeder)
Cassette4	Cassette 4 (paper feeder/large capacity feeder)
Cassette5	Cassette 5 (side multi tray/side deck)
Cassette6	Cassette 6 (side paper feeder/side large capacity feeder)
Cassette7	Cassette 7 (side paper feeder/side large capacity feeder)
Duplex	Duplex unit

* : When an optional paper feed unit is not installed, the corresponding count is not displayed.

Clearing

1. Select the counts to be cleared.
   [Cassette3], [Cassette4], [Cassette5], [Cassette6] and [Cassette7] cannot be cleared.
2. Select the counts for all and press [Clear].
3. Press the start key. The counts is cleared.

Back up

1. Select the paper feed location.
2. Select [Engine] when changing the PF main PWB.
   Backup the [Engine] counter values to [Enhancement].
   Select [Enhancement] when changing the paper feed unit.
   Backup the [Enhancement] counter values to [Engine].
3. Select [Execute].
4. Press the start key. Back up the counter values.
5. Turn the main power switch off and on. Allow more than 5 seconds between Off and On.

* : The values of cassette 4 counter vary in accordance with the cassette 3 counter.
The values of cassette 7 counter vary in accordance with the cassette 6 counter.
Select [None] if the counter values are not backed up.

Completion

Press the stop key. The screen for selecting a maintenance item No. is displayed.

Item No.	Description
U903	**Checking/clearing the paper jam counts** **Description** Displays or clears the jam counts by jam locations. **Purpose** To check the paper jam status. Also to clear the jam counts after replacing consumable parts. **Method** 1. Press the start key. 2. Select the item. **Method: [Cnt]** 1. Select [Cnt]. The count of jam code by type is displayed. Codes for which the count value is 0 are not displayed. 2. Change the screen using the cursor up/down keys. 3. Select the count value for jam code and press [Clear]. The individual counter cannot be cleared. 4. Press the start key. The counter value is cleared. **Method: [Total Cnt]** 1. Select [Total Cnt]. The total number of jam code by type is displayed. 2. Change the screen using the cursor up/down keys. The total number of jam count cannot be cleared. **How to display the history of paper jams** **[Function]** To check the variation in the occurrences of paper jams as a consequence of firmware upgrade. **[Procedure]** 1. Retrives versions of system and engine software at the timing of clearing. 2. Displays comparison of the occurrences of paper jams before and after firmware upgrades. 3. Displays the date of clearing. **[Method]** **At firmware upgrade** 1. Perform clearance of the counter following the above before performing firmware upgrade. 2. Clearing the counter records the date of clearing. 3. Perform firmware upgrade. **At performing service** 1. Print a maintenance report using mode U000 and check the variance of occurrence of paper jams after firmware upgrade was done.

Display	Description
Cnt	Displays/clears the jam counts
Total Cnt	Displays the total jam counts

Item No.	Description
U903	**Detail of history of paper jams**

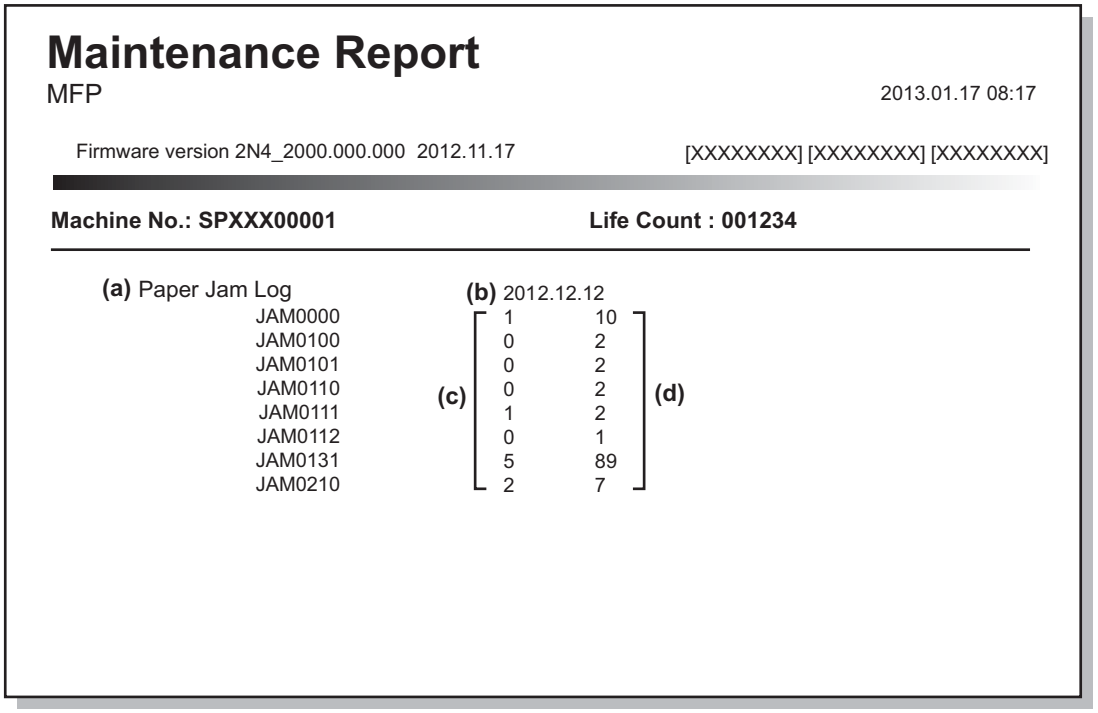

Figure 1-3-65

No.	Description
a	Paper jam numbers
b	Date of clearing counter records
c	Occurrences of paper jams after clearing the paper jam counts
d	Total number of paper jams

Method: [Total Cnt]

1. Select [Total Cnt]. The total number of jam code by type is displayed.
2. Change the screen using the cursor up/down keys.
   The total number of jam count cannot be cleared.

Completion

Press the stop key. The screen for selecting a maintenance item No. is displayed.

Item No.	Description
U904	**Checking/clearing the call for service counts** **Description** Displays or clears the service call code counts by types. **Purpose** To check the service call code status by types. Also to clear the service call code counts after replacing consumable parts. **Method** 1. Press the start key. 2. Select the item. **Method: [Cnt]** 1. Select [Cnt]. The count for service call detection by type is displayed. Codes for which the count value is 0 are not displayed. 2. Change the screen using the cursor up/down keys. 3. Select the count value for service call code and press [Clear]. The individual counter cannot be cleared. 4. Press the start key. The counter value is cleared. **Method: [Total Cnt]** 1. Select [Total Cnt]. The total number of service call counts by type is displayed. 2. Change the screen using the cursor up/down keys. The total number of service call count cannot be cleared. **How to display the history of service counts** **[Function]** To check the variation in the occurrences of service calls as a consequence of firmware upgrade. **[Procedure]** 1. Retrives versions of system and engine software at the timing of clearing. 2. Displays comparison of the occurrences of service calls before and after firmware upgrades. 3. Displays the date of clearing. **[Method]** **At firmware upgrade** 1. Perform clearance of the counter following the above before performing firmware upgrade. 2. Clearing the counter records the date of clearing. 3. Perform firmware upgrade. **At performing service** 1. Print a maintenance report using mode U000 and check the variance of occurrence of service calls after firmware upgrade was done.

Display	Description
Cnt	Displays/clears the call for service counts
Total Cnt	Displays the total call for service counts

Item No.	Description
U904	**Detail of history of service counts**

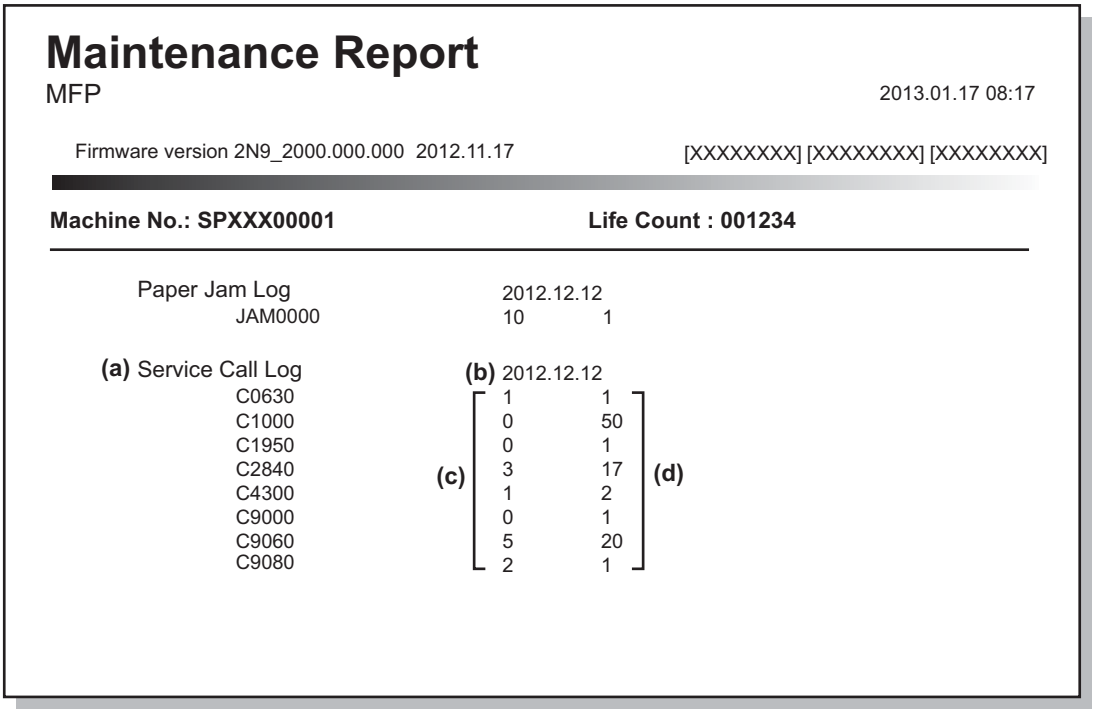

Figure 1-3-66

No	Description
a	Service call numbers
b	Date of clearing counter records
c	Occurrences of service calls after clearing the service call counts
d	Total number of service calls

Method: [Total Cnt]

1. Select [Total Cnt]. The total number of service call counts by type is displayed.
2. Change the screen using the cursor up/down keys.
   The total number of service call count cannot be cleared.

Completion

Press the stop key. The screen for selecting a maintenance item No. is displayed.

Item No.	Description
U905	**Checking counts by optional devices**

Description
Displays the counts of DP, 1000-sheet or 4000-sheet finisher.
Purpose
To check the use of DP, 1000-sheet or 4000-sheet finisher.

Method
1. Press the start key.
2. Select the device, the count of which is to be checked.
   The count of the selected device is displayed.

Display	Description
DP	Counts of DP
DF	Counts of 1000-sheet or 4000-sheet finisher

Method: [DP]

Display	Description
ADP	No. of single-sided originals that has passed through the DP
RADP	No. of double-sided originals that has passed through the DP
CIS	No. of dual scan originals that has passed through the DP

Method: [DF]

Display	Description
Sorter	No. of copies that has passed
Staple	Frequency the stapler has been activated
Punch	Frequency the punch has been activated
Stack*	Frequency the main tray eject has been activated
Saddle*	Frequency the saddle eject has been activated
Fold*	Frequency the center folding has been activated
Three Fold*	Frequency the tri-folding has been activated

* : 4000-sheet finisher only

Completion
Press the stop key. The screen for selecting a maintenance item No. is displayed.

Item No.	Description
U906	**Resetting partial operation control** **Description** Resets the service call code for partial operation control. **Purpose** To be reset after partial operation is performed due to problems in the cassettes or other sections, and the related parts are serviced. **Method** 1. Press the start key. 2. Press [Execute]. 3. Press the start key to reset partial operation control. 4. Turn the main power switch off and on. Allow more than 5 seconds between Off and On.
U908	**Checking the total counter value** **Description** Displays the total counter value. **Purpose** To check the total counter value. **Method** 1. Press the start key. The total count value is displayed. **Completion** Press the stop key. The screen for selecting a maintenance item No. is displayed.
U910	**Clearing the print coverage data** **Description** Clears the accumulated data for the print coverage per A4 size paper and its period of time (as shown on the service status report). **Purpose** To clear data as required at times such as during maintenance service. **Method** 1. Press the start key. 2. Select [Execute]. 3. Press the start key. The print coverage data is cleared. **Completion** Press the stop key. The screen for selecting a maintenance item No. is displayed.

Item No.	Description
U911	**Checking copy counts by paper sizes** **Description** Displays the paper feed counts by paper sizes. **Purpose** To check the counts after replacing consumable parts. **Method** 1. Press the start key. The screen for the paper feed counts by paper size is displayed. **Clearing** 1. Select the paper size of counts to be cleared. 2. Press the start key. The counts is cleared. **Completion** Press the stop key. The screen for selecting a maintenance item No. is displayed.

Display (metric)	Description	Display (inch)	Description
A3	Paper feed counts for A3	Ledger	Paper feed counts for Ledger
B4	Paper feed counts for B4	Legal	Paper feed counts for Legal
A4	Paper feed counts for A4	Letter	Paper feed counts for Letter
B5	Paper feed counts for B5	Statement	Paper feed counts for Statement
A5	Paper feed counts for A5		
Folio	Paper feed counts for Folio	ETC	Paper feed counts for other size
ETC	Paper feed counts for other size		

Item No.	Description
U917	**Setting backup data reading/writing**

Description
Retrieves the backup data to a USB memory from the machine; or writes the data from the USB memory to the machine.
Purpose
To store and write data when replacing the HDD or main PWB.
Method

1. Press the power key on the operation panel, and after verifying the power indicator has gone off, switch off the main power switch.
2. Insert USB memory in USB memory slot.
3. Turn the main power switch on.
   Wait for 10 seconds to allow the machine to recognize the USB memory.
4. Enter maintenance item U917.
5. Select [Import] or [Export].

Display	Description
Import	Writing data from the USB memory to the machine
Export	Retrieving from the machine to a USB memory

6. Select the item.

Display	Description	Depending data
Address Book	Address book	-
Job Account	Job accounting	-
One Touch	Information on one-touch key	Address Book
User	User managements	Job Account
Document Box	Document box information	Job Account, User
Shortcut	Shortcut information	Job Account, User, Document Box
Fax Forward	FAX transfer information	Job Account, User, Document Box
System	System information	-
Network	Network information	-
Job Setting	Job Setting information	-
Printer	Printer information	-
Fax Setting	Fax Setting information	-
Program	Program information	Address Book, Job Account, User, Document Box, Fax Forward, Fax Setting
Panel Setting	Panel Setting information	Address Book, Job Account, User, Document Box, Fax Forward, Fax Setting, Program

* : Since data are dependent with each other, data other than those assigned are also retrieved or written in.

Item No.	Description
U917	7. Press the start key. Starts reading or writing. The progress of selected item is displayed in %. When an error occurs, the operation is canceled and an error code is displayed. 8. When normally completed, [Finish] is displayed. * : Turn the main power switch off and on after completing writing when selecting [Import]. **Error Codes** **Completion** Press the stop key. The screen for selecting a maintenance item No. is displayed.

Codes	Description
e000	Unspecified error
e0001	Parameter error
e0002	Failed to generate a Dummy file
e0003	The target XML file to import does not exist
e0004	The exported file does not exist
e0100 to e01ff	Error in handling the addressbook
e0200 to e02ff	Error in handling One-touch
e0300 to e03ff	Error in handling user management
e0400 to e04ff	Error in handling panel-program data
e0500 to e05ff	Error in handling forwarding Fax data
e0600 to e06ff	Error in handling system configurations
e0700 to e07ff	Error in handling network parameters
e0800 to e08ff	Error in handling job accounting
e0900 to e09ff	Error in handling short-cuts
e0a00 to e0aff	Error in handling job information
e0b00 to e0bff	Error in handling Fax data
e0c00 toe0cff	Error in handling printer data
e0d00 to e0dff	Error in handling panel data
e0e00 to e0eff	Error in handling document boxes
e1000 to e1fff	Error in handling device-related information
e2000 to e2fff	Error in handling SOAP IF
e3000 to e3fff	Error in handling KM-WSDL IF
e4000 to e4fff	A file mandatory for importing is missing (e4002)/Invalid file header (e4008)
e5000 to e5fff	Error in handling rewriting SOAP data

Item No.	Description
U920	**Checking the copy counts** **Description** Checks the copy counts. **Purpose** To check the copy counts. **Method** 1. Press the start key. 2. Select the item.

Display	Description
Main Function	Counts of main function
Sub Function	Counts of sub function

[Setting: Main Function]

1. Select the item.
   * : The current counts are displayed.

Display	Description
Color Copy(H)	Count value of full color copy (coverage: high)
Color Copy(M)	Count value of full color copy (coverage: middle)
Color Copy(L)	Count value of full color copy (coverage: low)
Mono Color Copy	Count value of single color copy
B/W Copy	Count value of black/white copy
Color Prn(H)	Count value of full color print (coverage: high)
Color Prn(M)	Count value of full color print (coverage: middle)
Color Prn(L)	Count value of full color print (coverage: low)
B/W Prn	Count value of black/white print
B/W Fax	Count value of black/white FAX

[Setting: Sub Function]

1. Select the item.
   * : The current counts are displayed.

Display	Description
Simplex	Count value of Simplex copy
Duplex	Count value of Duplex copy
Combine(Off)	Count value of Combine copy (Off)
Combine(2in1)	Count value of Combine copy (2in1)
Combine(4in1)	Count value of Combine copy (4in1)

<table>
<tr><th>Item No.</th><th>Description</th></tr>
<tr><td>U920</td><td>Completion
Press the stop key. The screen for selecting a maintenance item No. is displayed.</td></tr>
<tr><td>U927</td><td>Clearing the all copy counts and machine life counts (one time only)

Description
Resets all of the counts back to zero.

Supplement
The total account counter and the machine life counter can be cleared only once if all count values are 1000 or less.

Method
1. Press the start key.
2. Select [Execute].
3. Press the start key. All copy counts and machine life counts are cleared.

Completion
Press the stop key. The screen for selecting a maintenance item No. is displayed.</td></tr>
<tr><td>U928</td><td>Checking machine life counts

Description
Displays the machine life counts.
Purpose
To check the machine life counts.

Method
1. Press the start key. The current machine life counts is displayed.
<table>
<tr><th>Display</th><th>Description</th></tr>
<tr><td>Cnt</td><td>Machine life counts</td></tr>
</table>

Completion
Press the stop key. The screen for selecting a maintenance item No. is displayed.</td></tr>
</table>

Item No.	Description
U930	**Checking/clearing the charger roller count** **Description** Displays the counts of the charger roller counter for checking or clearing. **Purpose** To check the count after replacement of the charger roller unit. To clear the counter value when replacing the charger roller unit. **Method** 1. Press the start key. The current counts of the charger roller count for each color is displayed. **Display** / **Description** C — Count value of cyan charger roller M — Count value of magenta charger roller Y — Count value of yellow charger roller K — Count value of black charger roller **Clearing** 1. Select the counts to be cleared. 2. Select the counts for all and press [Clear]. 3. Press the start key. The counts is cleared. **Completion** Press the stop key. The screen for selecting a maintenance item No. is displayed.

Item No.	Description
U933	**Set Maintenance Mode Execute Log** **Description** Perform individual configuration or log file printing for the date when maintenance mode is entered and exited or for the feature which records the dates when maintenance mode numbers are executed. **Purpose** Logs a history of execution of maintenance modes for an analysis of causes against the problems. **Method** 1. Press the start key. 2. Select the item. **Method: [Export]** 1. Press the start key. 2. Select [Execute]. 3. Press the start key. Exports a maintenance log to a USB flash device. * : [Execute] is grayed out is a USB memory is not installed. * : Displays a OK or NG after execution. **Setting: [Setting]** 1. Select the item. * : Select the key that includes the number you want to configure as the logs are displayed block by block. ([U000-U019],[U020-U029], ... ,[U900-U999]) 2. Enable or disable the number to configure. **Completion** Press the stop key. The screen for selecting a maintenance item No. is displayed.

Display	Description
Export	Exports a maintenance log
Setting	Configures maintenance logs to output

Item No.	Description
U942	**Setting of deflection for feeding from DP** **Description** Adjusts the deflection generated when the document processor is used. **Purpose** Use this mode if an original non-feed jam, oblique feed or wrinkling of original occurs when the document processor is used. **Setting** 1. Press the start key. 2. Press the system menu key. 3. Place an original on the DP and press the start key to make a test copy. 4. Press the system menu key. 5. Select the item to be adjusted. 6. Change the setting value using the +/- keys or numeric keys.l

Display	Description	Setting range	Initial setting	Change in value per step
Front	Deflection of single-sided original	-31 to 31	0	0.17 mm
Back*	Deflection of double-sided original	-31 to 31	0	0.17 mm
Mix	Deflection of mixed original	-31 to 31	0	0.17 mm

*1: Reversed DP only.

* : The greater the value, the larger the deflection; the smaller the value, the smaller the deflection.
If an original non-feed jam or oblique feed occurs, increase the setting value. If wrinkling of original occurs, decrease the value.

7. Press the start key. The value is set.

Completion

Press the stop key. The screen for selecting a maintenance item No. is displayed.

Item No.	Description
U952	**Maintenance mode workflow** **Description** The maintenance modes configured in the machine or a USB flash device as a workflow must be executed in succession. **Purpose** This allows maintenance mode to be preset as a template. **Setting** 1. Press the start key. 2. Select the item.

Display	Description
Continue	Restarting an abandoned workflow
Execute(USB)	Executes a workflow housed in a USB flash device
Execute	Executes a workflow stored in the machine
Entry(USB)	Exports a workflow housed in a USB flash device to the machine
Entry	Assigns a workflow in the machine manually
Log	Displays a list of workflows recently executed

Method: [Execute]

1. Select [Execute].
2. Select the workflow.
   * : The machine is preset with the following workflow at shipment.

Display	Description
SETUP	U464/ U469/ U410/ U000/ U927/ U278
WARRANTY	U089/ U000
MK-A	U119/ U930/ U140*/ U469/ U127/ U464/ U469/ U412/ U464/ U410/ U251
MK-B	U119/ U930/ U140*/ U464/ U469/ U412/ U464/ U410/ U251
MK-C	U167/ U464/ U469/ U410/ U251
EH SETUP	U411/ U034/ U246/ U211
Data7	-
Data8	-

   * : 45 ppm/55 ppm model only.
3. Press the start key.
   * : Executes maintenance modes defined in a workflow in succession.

Item No.	Description
U952	**Method: [Entry]** 1. Select [Entry]. 2. Select the area to store workflow. **Display** / **Description**: Data1 - 8 / The area to store workflows in the machine 3. Press the +/- keys or numeric keys to assign a maintenance Nbr. into a workflow. **Display** / **Description**: Flow1 - 14 / Assign a maintenance Nbr. 4. Press the start key. The setting is set. 5. Press the start key. Executes maintenance modes defined in a workflow in succession. **Method: [Execute(USB)]** 1. Press the power key on the operation panel, and after verifying the main power indicator has gone off, switch off the main power switch. 2. Insert USB memory in USB memory slot. 3. Turn the main power switch on. 4. Enter maintenance item U952. 5. Select [Execute(USB)]. 6. Select the workflow. **Display** / **Description**: WorkFlowData01 - 07 / Workflow data in the USB flash device 7. Press the start key. Executes maintenance modes defined in a workflow in succession. **Method: [Entry(USB)]** 1. Press the power key on the operation panel, and after verifying the main power indicator has gone off, switch off the main power switch. 2. Insert USB memory in USB memory slot. 3. Turn the main power switch on. 4. Enter maintenance item U952. 5. Select [Entry(USB)]. 6. Select the workflow. **Display** / **Description**: WorkFlowData01 - 07 / Workflow data in the USB flash device 7. Select the work flow save area. **Display** / **Description**: Data1 - 8 / The area to store workflows in the machine 8. Select [Execute]. Exports a workflow housed in a USB flash device to the machine.

<table>
<tr><th>Item No.</th><th>Description</th></tr>
<tr><td>U952</td><td>
Example
Registration is feasible when a USB flash device that stores the commands and text/maintenance ID (editable) is inserted.
File Format: xxx.mwf

1, SET UP, 464, 469, 410, 000, 927, 278
2, WARRANTY, 089, 000
3, MK-A, 119, 930, 140, 469, 127, 464, 469, 412, 464, 410, 251
4, MK-B, 119, 930, 140, 464, 469, 412, 464, 410, 251
5, MK-C, 167, 464, 469, 410, 251

Completion
Press the stop key. The screen for selecting a maintenance item No. is displayed.
</td></tr>
<tr><td>U964</td><td>
Checking of log

Description
Sends a log file saved on the HDD to a USB memory.
Purpose
To transfer a log file saved on the HDD to a USB memory as a means of investigating malfunctions.

Method
1. Press the power key on the operation panel, and after verifying the main power indicator has gone off, switch off the main power switch.
2. Insert USB memory in USB memory slot.
3. Turn the main power switch on.
4. Enter maintenance item U964.
<table>
<tr><th>Display</th><th>Description</th></tr>
<tr><td>Execute</td><td>Executes transferring a log file.</td></tr>
<tr><td>Jam Log</td><td>Switches functions for obtaining logs at a paper jam.</td></tr>
</table>
5. Select [Execute].
6. Press the start key.
Starts sending the log file saved on the HDD to the USB memory.
Processing is displayed for approximately 3 to 5 minutes.
7. When normally completed, [Completed] is displayed.
8. Turn the main power switch off and on. Allow more than 5 seconds between Off and On.
If a problem occurs during auto correction, error code is displayed.

Setting: [Jam Log]
1. It is unnecessary to choose the Jam Log "On" / "Off" setting.
* : Regardless of the setting, the Jam Log is acquired.
</td></tr>
</table>

<table>
<tr><th>Item No.</th><th>Description</th></tr>
<tr><td>U964</td><td>
Supplement
Instructions on how to obtain a log when the operation panel has frozen
Simultaneously press and hold the *, 8, 6, and Clear keys for 3 to 6 seconds to start logging.
The memory indicator keeps lighting during a log is generated and goes off when completed.
* : The logs obtained in this manner can be retrieved in the USB flash device using the maintenance mode.
Error codes
<table>
<tr><th>Display</th><th>Description</th></tr>
<tr><td>No Usb Storage</td><td>USB memory is not inserted</td></tr>
<tr><td>No File</td><td>File is not found</td></tr>
<tr><td>Mount Error</td><td>Failure to delete the existing files in the USB flash device</td></tr>
<tr><td>File Delete Error</td><td>Failure to copy from the HDD to the USB flash device</td></tr>
</table>
</td></tr>
<tr><td>U969</td><td>
Checking of toner area code

Description
Displays the toner area code.
Purpose
To check the toner area code.

Method
1. Press the start key. The toner area code is displayed.

Completion
Press the stop/clear key. The screen for selecting a maintenance item No. is displayed.
</td></tr>
</table>

Item No.	Description
U977	**Data capture mode** **Description** Store the print data sent to the machine into USB memory. **Purpose** In case to occur the error at printing, check the print data sent to the machine. **Method** 1. Press the power key on the operation panel, and after verifying the main power indicator has gone off, switch off the main power switch. 2. Insert USB memory in USB memory slot. 3. Turn the main power switch on. 4. Enter maintenance item U977. 5. Select [Execute]. 6. Press the start key. 7. Send the print data to the machine. Once the print data is stored into USB memory, [Finish] will be displayed. **Completion** Press the stop key. The screen for selecting a maintenance item No. is displayed. **Error codes** Error codes: 1 — A removable memory has been crushed. A removable memory was removed during processing or is write-protected. 2 — The removable memory is full. 50 — Other error
U978	**Clear Optional Function** **Description** Clear the optional function error. **Purpose** Clear the optional function error. **Method** 1. Press the start key. 2. Select [Execute]. * : A message that prompts you to turn power off and on will be displayed after completion of the normal operation, deactivating the keys. Object error : C9940 Confidential document guard uninstalled error

Item No.	Description
U984	**Checking the developer unit number** **Description** Displays the developer unit number. **Purpose** To check the developer unit number. **Method** 1. Press the start key. The developer unit number for each color is displayed. **Completion** Press the stop key. The screen for selecting a maintenance item No. is displayed.

Display	Description
C	Cyan developer unit number
M	Magenta developer unit number
Y	Yellow developer unit number
K	Black developer unit number

<table>
<tr><th>Item No.</th><th>Description</th></tr>
<tr><td>U985</td><td>

Displaying the developer unit history

Description
Displays the past record of machine number and the developer counter.
Purpose
To check the count value of machine number and the developer counter.

Method
1. Press the start key.
2. Select the color to check.

<table>
<tr><th>Display</th><th>Description</th></tr>
<tr><td>C</td><td>Cyan developer unit past record</td></tr>
<tr><td>M</td><td>Magenta developer unit past record</td></tr>
<tr><td>Y</td><td>Yellow developer unit past record</td></tr>
<tr><td>K</td><td>Black developer unit past record</td></tr>
</table>

The history of a machine number and a developer counter for each color is displayed by three cases.

<table>
<tr><th>Display</th><th>Description</th></tr>
<tr><td>Machine History1 - 3</td><td>Historical records of the machine number</td></tr>
<tr><td>Cnt History1 - 3</td><td>Historical records of developer counter</td></tr>
</table>

Completion
Press the stop key. The screen for selecting a maintenance item No. is displayed.

</td></tr>
<tr><td>U989</td><td>

HDD Scan disk

Description
Restores data in the hard disk by scanning the disk.
Purpose
If power is turned off while accessing to the hard disk is performed, the control information in the hard disk drive may be damaged. Use this mode to restore the data.

Method
1. Press the start key.
2. Select [Execute].
3. Press the start key.
4. Turn the main power switch off and on. Allow more than 5 seconds between Off and On.

</td></tr>
</table>

Item No.	Description
U990	**Checking the time for the exposure lamp to light** **Description** Displays the accumulated time for the CIS to light. **Purpose** To check duration of use of the CIS. **Method** 1. Press the start key. The accumulated time for the CIS to light is displayed in minutes. **Completion** Press the stop key. The screen for selecting a maintenance item No. is displayed.
U991	**Checking the scanner operation count** **Description** Displays the scanner operation count. **Purpose** To check the status of use of the scanner. **Method** 1. Press the start key. The current operation counts is displayed. **Completion** Press the stop key. The screen for selecting a maintenance No. item is displayed.

Display	Description
CIS	The accumulated time for the CIS to light

Display	Description
Copy Scan	Scanner operation counts for copying
Fax Scan	Scanner operation counts for fax
Other Scan	Scanner operation counts except for copying

This page is intentionally left blank.

1-4-1 Paper misfeed detection

(1) Paper misfeed indication

When a paper misfeed occurs, the machine immediately stops printing and displays the paper misfeed message on the operation panel. To remove paper misfed in the machine, pull out the cassette, open the paper conveying unit or paper conveying cover.
The positions and the corrective actions are displayed on the touch panel when a paper jam has occurred.

Jam code: Jam code suggesting the cause of jam
Position code: Code suggesting the place of jam

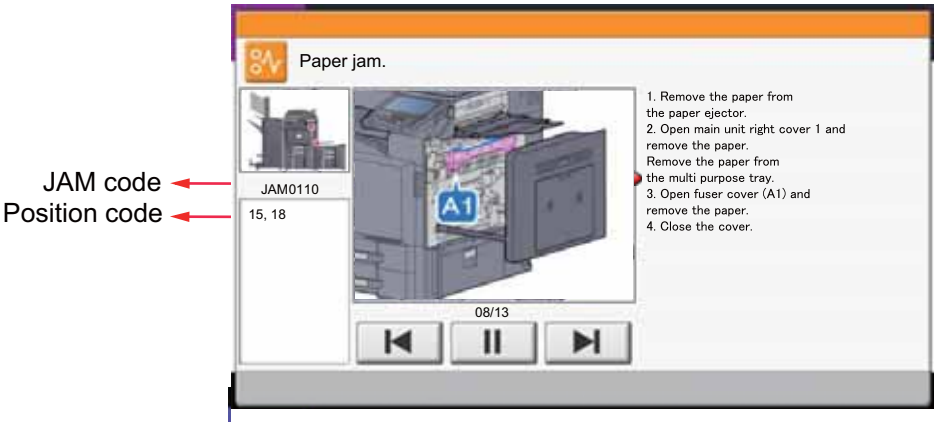

Figure 1-4-1

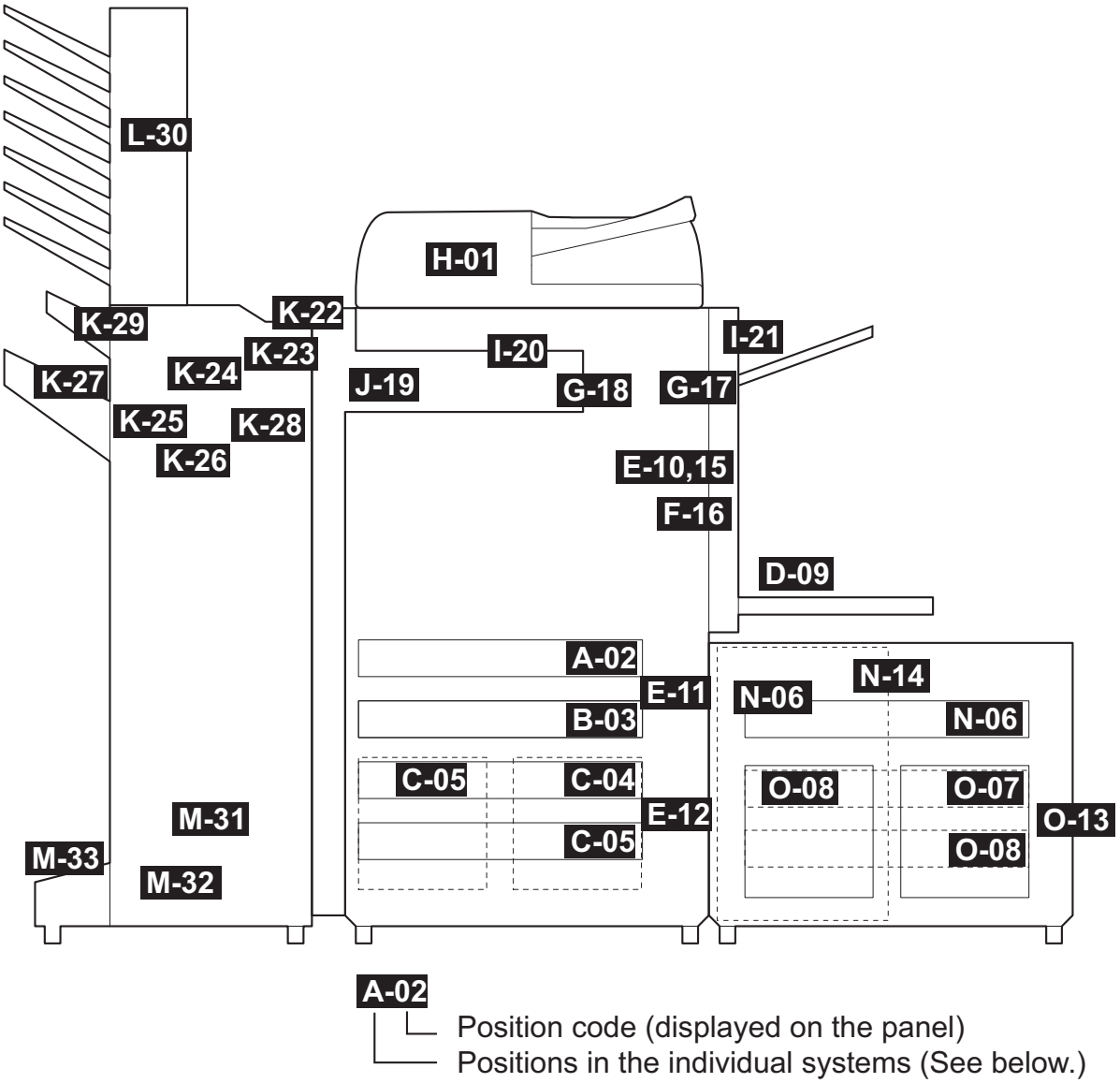

Figure 1-4-2 Paper misfeed indication

A. Misfeed in cassette 1
B. Misfeed in cassette 2
C. Misfeed in cassette 3 or 4 (option)
D. Misfeed in the MP tray
E. Misfeed in paper conveying unit, paper conveying cover or PF paper conveying cover
F. Misfeed in the duplex section
G. Misfeed in the fuser section
H. Misfeed in document processor (option)
I. Misfeed in job separator (option)
J. Misfeed in bridge unit (option)
K. Misfeed in document finisher (option)
L. Misfeed in Mail box (option)
M. Misfeed Center-folding unit (option)
N. Misfeed in cassette 5 (option)
O. Misfeed in cassette 6 or 7 (option)

(2) Paper misfeed detection condition

Machine + Option1

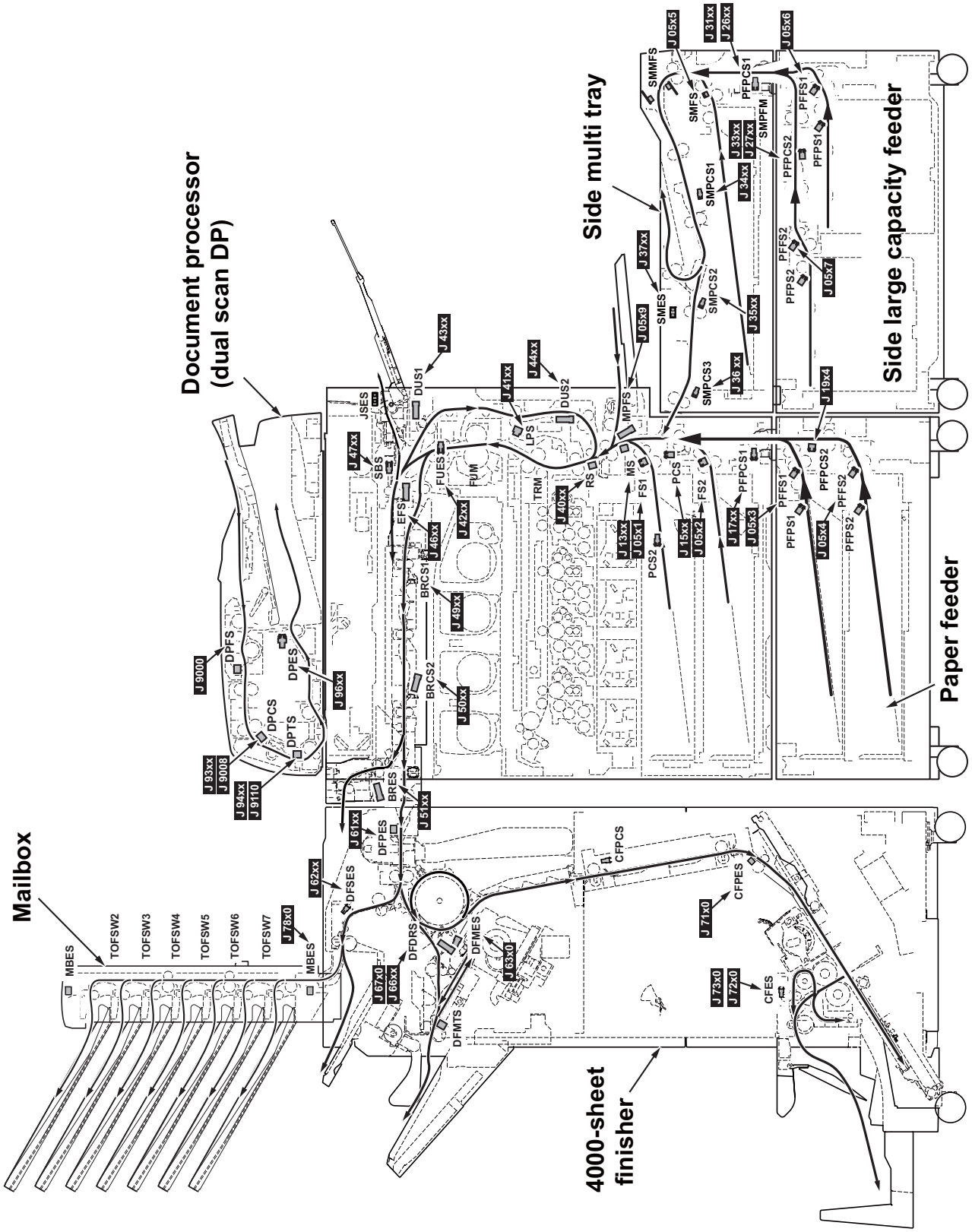

Figure 1-4-3 Paper jam location (Machine + Option1)

Machine + Option2

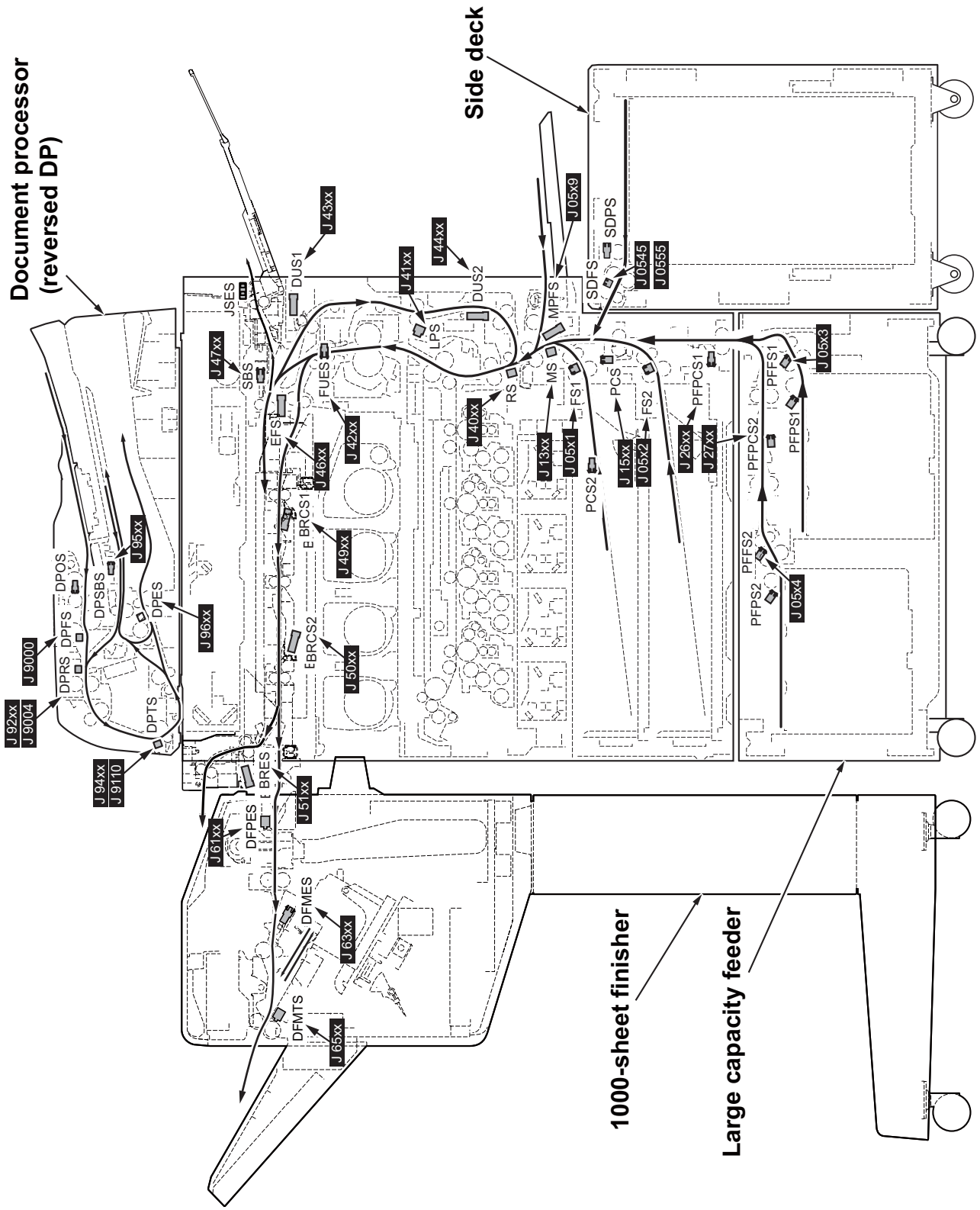

Figure 1-4-4 Paper jam location (Matchine + Option2)

* : This model does not support the following codes: 0132 /0505 /0515 /9030

List of JAM Code

Code	Contents	Conditions	Jam location*
0000	Initial jam	The power is turned on when a sensor in the conveying system is on.	-
0100	Secondary paper feed request time out	Secondary paper feed request given by the controller is unreachable.	-
0101	Waiting for process package to become ready	Process package won't become ready.	-
0102	Waiting for toner package to become ready	Toner package won't become ready.	-
0103	Waiting for the image-sustaining package to become ready	The image-sustaining package won't become ready.	-
0104	Waiting for conveying package to become ready	Conveying package won't become ready.	-
0106	Paper feeding request for duplex printing time out	Paper feeding request for duplex printing given by the controller is unreachable.	-
0107	Waiting for fuser package to become ready	Fuser package won't become ready.	-
0108	Waiting for option package to become ready	Option package won't become ready.	-
0110	Paper conveying unit open	The paper conveying unit is opened during printing.	E
0111	Front cover open	The front cover is opened during printing.	-
0112	Duplex cover open	The duplex cover is opened during printing.	F
0113	Paper conveying cover open	The paper conveying cover is opened during printing.	E
0114	BR conveying unit open	The BR conveying unit is opened during printing.	J
0115	BR eject cover open	The BR eject cover is opened during printing.	J
0131	MP lift sensor upper limit detection	MP lift sensor 1 (MPLS1) does not turn on within specified time of the MP lift plate rising.	D
0132	Rotary guide detection	Rotary sensor (RTS) does not turn on.	J
0200	Machine sequence error	A sequence error has occurred.	-
0210	PF paper conveying cover open	The PF paper conveying cover is opened during printing.	E
0211	SM paper conveying cover open	The SM paper conveying cover is opened during printing.	N
0212	SM top cover open	The SM top cover is opened during printing.	N

*: Refer to figure 1-4-1 for paper misfeed indication (see page 1-4-1).

Code	Contents	Conditions	Jam location*
0213	SD cover open	The SD cover is opened during printing.	N
0214	PF paper conveying cover (side) open	The PF paper conveying cover (side) is opened during printing.	O
0215	Side multi tray release	The side multi tray is released during printing.	N
0300	Ejection uncompleted	An ejection-completed error has occurred.	-
0501	No paper feed from cassette 1	Feed sensor 1 (FS1) does not turn on during paper feed from cassette 1.	A
0502	No paper feed from cassette 2	Feed sensor 2 (FS2) does not turn on during paper feed from cassette 2.	B
0503	No paper feed from cassette 3	PF feed sensor 1 (PFFS1) does not turn on during paper feed from cassette 3 (paper feeder).	C
0504	No paper feed from cassette 4	PF feed sensor 2 (PFFS2) does not turn on during paper feed from cassette 4 (paper feeder).	C
0506	No paper feed from cassette 6	PF feed sensor 1 (PFFS1) does not turn on during paper feed from cassette 6 (side paper feeder).	O
0507	No paper feed from cassette 7	PF feed sensor 2 (PFFS2) does not turn on during paper feed from cassette 7 (side paper feeder).	O
0508	No paper feed from duplex section	Registration sensor (RS) does not turn on during paper feed from duplex section.	F
0509	No paper feed from MP tray	MP feed sensor (MPFS) does not turn on during paper feed from MP tray.	D
0511	Multiple sheets in cassette 1	Feed sensor 1 (FS1) does not turn off during paper feed from cassette 1.	A
0512	Multiple sheets in cassette 2	Feed sensor 2 (FS2) does not turn off during paper feed from cassette 2.	B
0513	Multiple sheets in cassette 3	PF feed sensor 1 (PFFS1) does not turn off during paper feed from cassette 3 (paper feeder).	C
0514	Multiple sheets in cassette 4	PF feed sensor 2 (PFFS2) does not turn off during paper feed from cassette 4 (paper feeder).	C
0516	Multiple sheets in cassette 6	PF feed sensor 1 (PFFS1) does not turn off during paper feed from cassette 6 (side paper feeder).	O
0517	Multiple sheets in cassette 7	PF feed sensor 2 (PFFS2) does not turn off during paper feed from cassette 7 (side paper feeder).	O
0518	Multiple sheets in duplex section	Registration sensor (RS) does not turn off during paper feed from duplex section.	F
0519	Multiple sheets in MP tray	MP feed sensor (MPFS) does not turn off during paper feed from MP tray.	D
0523	No paper feed from cassette 3	PF feed sensor 1 (PFFS1) does not turn on during paper feed from cassette 3 (large capacity feeder).	C
0524	No paper feed from cassette 4	PF feed sensor 2 (PFFS2) does not turn on during paper feed from cassette 4 (large capacity feeder).	C

*: Refer to figure 1-4-1 for paper misfeed indication (see page 1-4-1).

Code	Contents	Conditions	Jam location*
0525	No paper feed from cassette 5	SM feed sensor (SMFS) does not turn on during paper feed from cassette 5 (side multi tray).	N
0526	No paper feed from cassette 6	PF feed sensor 1 (PFFS1) does not turn on during paper feed from cassette 6 (side large capacity feeder).	O
0527	No paper feed from cassette 7	PF feed sensor 2 (PFFS2) does not turn on during paper feed from cassette 7 (side large capacity feeder).	O
0533	Multiple sheets in cassette 3	PF feed sensor 1 (PFFS1) does not turn off during paper feed from cassette 3 (large capacity feeder).	C
0534	Multiple sheets in cassette 4	PF feed sensor 2 (PFFS2) does not turn off during paper feed from cassette 4 (large capacity feeder).	C
0535	Multiple sheets in cassette 5	SM feed sensor (SMFS) does not turn off during paper feed from cassette 5 (side multi tray).	N
0536	Multiple sheets in cassette 6	PF feed sensor 1 (PFFS1) does not turn off during paper feed from cassette 6 (side large capacity feeder).	O
0537	Multiple sheets in cassette 7	PF feed sensor 2 (PFFS2) does not turn off during paper feed from cassette 7 (side large capacity feeder).	O
0545	No paper feed from side deck	SD feed sensor (SDFS) does not turn on during paper feed from side deck.	N
0555	Multiple sheets in side deck	SD feed sensor (SDFS) does not turn off during paper feed from side deck.	N
1301	Middle sensor non arrival jam	Middle sensor (MS) does not turn on during paper feed from cassette 1.	A
1302		Middle sensor (MS) does not turn on during paper feed from cassette 2.	B
1303		Middle sensor (MS) does not turn on during paper feed from cassette 3 (paper feeder/large capacity feeder).	C
1304		Middle sensor (MS) does not turn on during paper feed from cassette 4 (paper feeder/large capacity feeder).	C
1305		Middle sensor (MS) does not turn on during paper feed from cassette 5 (side multi tray/side deck).	N
1306		Middle sensor (MS) does not turn on during paper feed from cassette 6 (side paper feeder/side large capacity feeder).	O
1307		Middle sensor (MS) does not turn on during paper feed from cassette 7 (side paper feeder/side large capacity feeder).	O

*: Refer to figure 1-4-1 for paper misfeed indication (see page 1-4-1).

Code	Contents	Conditions	Jam location*
1311	Middle sensor stay jam	Middle sensor (MS) does not turn off during paper feed from cassette 1.	E
1312		Middle sensor (MS) does not turn off during paper feed from cassette 2.	E
1313		Middle sensor (MS) does not turn off during paper feed from cassette 3 (paper feeder/large capacity feeder).	E
1314		Middle sensor (MS) does not turn off during paper feed from cassette 4 (paper feeder/large capacity feeder).	E
1315		Middle sensor (MS) does not turn off during paper feed from cassette 5 (side multi tray/side deck).	E
1316		Middle sensor (MS) does not turn off during paper feed from cassette 6 (side paper feeder/side large capacity feeder).	E
1317		Middle sensor (MS) does not turn off during paper feed from cassette 7 (side paper feeder/side large capacity feeder).	E
1502	Paper conveying sensor non arrival jam	Paper conveying sensor (PCS) does not turn on during paper feed from cassette 2.	B
1503		Paper conveying sensor (PCS) does not turn on during paper feed from cassette 3 (paper feeder/large capacity feeder).	C
1504		Paper conveying sensor (PCS) does not turn on during paper feed from cassette 4 (paper feeder/large capacity feeder).	C
1512	Paper conveying sensor stay jam	Paper conveying sensor (PCS) does not turn off during paper feed from cassette 2.	E
1513		Paper conveying sensor (PCS) does not turn off during paper feed from cassette 3 (paper feeder/large capacity feeder).	E
1514		Paper conveying sensor (PCS) does not turn off during paper feed from cassette 4 (paper feeder/large capacity feeder).	E
1703	PF paper conveying sensor 1 non arrival jam	PF paper conveying sensor 1 (PFPCS1) does not turn on during paper feed from cassette 3 (paper feeder).	C
1704		PF paper conveying sensor 1 (PFPCS1) does not turn on during paper feed from cassette 4 (paper feeder).	C
1713	PF paper conveying sensor 1 stay jam	PF paper conveying sensor 1 (PFPCS1) does not turn off during paper feed from cassette 3 (paper feeder).	E
1714		PF paper conveying sensor 1 (PFPCS1) does not turn off during paper feed from cassette 4 (paper feeder).	E
1904	PF paper conveying sensor 2 non arrival jam	PF paper conveying sensor 2 (PFPCS2) does not turn on during paper feed from cassette 4 (paper feeder).	C

*: Refer to figure 1-4-1 for paper misfeed indication (see page 1-4-1).

Code	Contents	Conditions	Jam location*
1914	PF paper conveying sensor 2 stay jam	PF paper conveying sensor 2 (PFPCS2) does not turn off during paper feed from cassette 4 (paper feeder).	C
2106	PF paper conveying sensor 1 non arrival jam	PF paper conveying sensor 1 (PFPCS1) does not turn on during paper feed from cassette 6 (side paper feeder).	O
2107		PF paper conveying sensor 1 (PFPCS1) does not turn on during paper feed from cassette 7 (side paper feeder).	O
2116	PF paper conveying sensor 1 stay jam	PF paper conveying sensor 1 (PFPCS1) does not turn off during paper feed from cassette 6 (side paper feeder).	N
2117		PF paper conveying sensor 1 (PFPCS1) does not turn off during paper feed from cassette 7 (side paper feeder).	N
2307	PF paper conveying sensor 2 non arrival jam	PF paper conveying sensor 2 (PFPCS2) does not turn on during paper feed from cassette 7 (side paper feeder).	O
2317	PF paper conveying sensor 2 stay jam	PF paper conveying sensor 2 (PFPCS2) does not turn off during paper feed from cassette 7 (side paper feeder).	O
2603	PF paper conveying sensor 1 non arrival jam	PF paper conveying sensor 1 (PFPCS1) does not turn on during paper feed from cassette 3 (large capacity feeder).	C
2604		PF paper conveying sensor 1 (PFPCS1) does not turn on during paper feed from cassette 4 (large capacity feeder).	C
2606		PF paper conveying sensor 1 (PFPCS1) does not turn on during paper feed from cassette 6 (side large capacity feeder).	O
2607		PF paper conveying sensor 1 (PFPCS1) does not turn on during paper feed from cassette 7 (side large capacity feeder).	O
2613	PF paper conveying sensor 1 stay jam	PF paper conveying sensor 1 (PFPCS1) does not turn off during paper feed from cassette 3 (large capacity feeder).	E
2614		PF paper conveying sensor 1 (PFPCS1) does not turn off during paper feed from cassette 4 (large capacity feeder).	E
2616		PF paper conveying sensor 1 (PFPCS1) does not turn off during paper feed from cassette 6 (side large capacity feeder).	O
2617		PF paper conveying sensor 1 (PFPCS1) does not turn off during paper feed from cassette 7 (side large capacity feeder).	O

*: Refer to figure 1-4-1 for paper misfeed indication (see page 1-4-1).

Code	Contents	Conditions	Jam location*
2704	PF paper conveying sensor 2 non arrival jam	PF paper conveying sensor 2 (PFPCS2) does not turn on during paper feed from cassette 4 (large capacity feeder).	C
2707		PF paper conveying sensor 2 (PFPCS2) does not turn on during paper feed from cassette 7 (side large capacity feeder).	O
2714	PF paper conveying sensor 2 stay jam	PF paper conveying sensor 2 (PFPCS2) does not turn off during paper feed from cassette 4 (large capacity feeder).	C
2717		PF paper conveying sensor 2 (PFPCS2) does not turn off during paper feed from cassette 7 (side large capacity feeder).	O
3405	SM paper conveying sensor 1 non arrival jam	SM paper conveying sensor 1 (SMPCS1) does not turn on during paper feed from cassette 5 (side multi tray).	N
3406		SM paper conveying sensor 1 (SMPCS1) does not turn on during paper feed from cassette 6 (side multi tray).	O
3407		SM paper conveying sensor 1 (SMPCS1) does not turn on during paper feed from cassette 7 (side multi tray).	O

*: Refer to figure 1-4-1 for paper misfeed indication (see page 1-4-1).

Code	Contents	Conditions	Jam location*
3415	SM paper conveying sensor 1 stay jam	SM paper conveying sensor 1 (SMPCS1) does not turn off during paper feed from cassette 5 (side multi tray).	N
3416		SM paper conveying sensor 1 (SMPCS1) does not turn off during paper feed from cassette 6 (side multi tray).	N
3417		SM paper conveying sensor 1 (SMPCS1) does not turn off during paper feed from cassette 7 (side multi tray).	N
3505	SM paper conveying sensor 2 non arrival jam	SM paper conveying sensor 2 (SMPCS2) does not turn on during paper feed from cassette 5 (side multi tray).	N
3506		SM paper conveying sensor 2 (SMPCS2) does not turn on during paper feed from cassette 6 (side multi tray).	O
3507		SM paper conveying sensor 2 (SMPCS2) does not turn on during paper feed from cassette 7 (side multi tray).	O
3515	SM paper conveying sensor 2 stay jam	SM paper conveying sensor 2 (SMPCS2) does not turn off during paper feed from cassette 5 (side multi tray).	N
3516		SM paper conveying sensor 2 (SMPCS2) does not turn off during paper feed from cassette 6 (side multi tray).	N
3517		SM paper conveying sensor 2 (SMPCS2) does not turn off during paper feed from cassette 7 (side multi tray).	N
3605	SM paper conveying sensor 3 non arrival jam	SM paper conveying sensor 3 (SMPCS3) does not turn on during paper feed from cassette 5 (side multi tray).	N
3606		SM paper conveying sensor 3 (SMPCS3) does not turn on during paper feed from cassette 6 (side multi tray).	N
3607		SM paper conveying sensor 3 (SMPCS3) does not turn on during paper feed from cassette 7 (side multi tray).	N

*: Refer to figure 1-4-1 for paper misfeed indication (see page 1-4-1).

Code	Contents	Conditions	Jam location*
3615	SM paper conveying sensor 3 stay jam	SM paper conveying sensor 3 (SMPCS3) does not turn off during paper feed from cassette 5 (side multi tray).	N
3616		SM paper conveying sensor 3 (SMPCS3) does not turn off during paper feed from cassette 6 (side multi tray).	N
3617		SM paper conveying sensor 3 (SMPCS3) does not turn off during paper feed from cassette 7 (side multi tray).	N
3705	SM eject sensor non arrival jam	SM eject sensor (SMES) does not turn on during paper feed from cassette 5 (side multi tray).	N
3706		SM eject sensor (SMES) does not turn on during paper feed from cassette 6 (side multi tray).	O
3707		SM eject sensor (SMES) does not turn on during paper feed from cassette 7 (side multi tray).	O
3715	SM eject sensor stay jam	SM eject sensor (SMES) does not turn off during paper feed from cassette 5 (side multi tray).	N
3716		SM eject sensor (SMES) does not turn off during paper feed from cassette 6 (side multi tray).	N
3717		SM eject sensor (SMES) does not turn off during paper feed from cassette 7 (side multi tray).	N
4001	Registration sensor non arrival jam	Registration sensor (RS) does not turn on during paper feed from cassette 1.	E
4002		Registration sensor (RS) does not turn on during paper feed from cassette 2.	E
4003		Registration sensor (RS) does not turn on during paper feed from cassette 3 (paper feeder/large capacity feeder).	E
4004		Registration sensor (RS) does not turn on during paper feed from cassette 4 (paper feeder/large capacity feeder).	E
4005		Registration sensor (RS) does not turn on during paper feed from cassette 5 (side multi tray/side deck).	E
4006		Registration sensor (RS) does not turn on during paper feed from cassette 6 (side paper feeder/side large capacity feeder).	E
4007		Registration sensor (RS) does not turn on during paper feed from cassette 7 (side paper feeder/side large capacity feeder).	E
4009		Registration sensor (RS) does not turn on during paper feed from MP tray.	E

*: Refer to figure 1-4-1 for paper misfeed indication (see page 1-4-1).

Code	Contents	Conditions	Jam location*
4011	Registration sensor stay jam	Registration sensor (RS) does not turn off during paper feed from cassette 1.	E
4012		Registration sensor (RS) does not turn off during paper feed from cassette 2.	E
4013		Registration sensor (RS) does not turn off during paper feed from cassette 3 (paper feeder/large capacity feeder).	E
4014		Registration sensor (RS) does not turn off during paper feed from cassette 4 (paper feeder/large capacity feeder).	E
4015		Registration sensor (RS) does not turn off during paper feed from cassette 5 (side multi tray/side deck).	E
4016		Registration sensor (RS) does not turn off during paper feed from cassette 6 (side paper feeder/side large capacity feeder).	E
4017		Registration sensor (RS) does not turn off during paper feed from cassette 7 (side paper feeder/side large capacity feeder).	E
4019		Registration sensor (RS) does not turn off during paper feed from MP tray.	E
4101	Loop sensor non arrival jam	Loop sensor (LPS) does not turn on during paper feed from cassette 1.	E
4102		Loop sensor (LPS) does not turn on during paper feed from cassette 2.	E
4103		Loop sensor (LPS) does not turn on during paper feed from cassette 3 (paper feeder/large capacity feeder).	E
4104		Loop sensor (LPS) does not turn on during paper feed from cassette 4 (paper feeder/large capacity feeder).	E
4105		Loop sensor (LPS) does not turn on during paper feed from cassette 5 (side multi tray/side deck).	E
4106		Loop sensor (LPS) does not turn on during paper feed from cassette 6 (side paper feeder/side large capacity feeder).	E
4107		Loop sensor (LPS) does not turn on during paper feed from cassette 7 (side paper feeder/side large capacity feeder).	E
4108		Loop sensor (LPS) does not turn on during paper feed from duplex section.	E
4109		Loop sensor (LPS) does not turn on during paper feed from MP tray.	E

*: Refer to figure 1-4-1 for paper misfeed indication (see page 1-4-1).

Code	Contents	Conditions	Jam location*
4111	Loop sensor stay jam	Loop sensor (LPS) does not turn off during paper feed from cassette 1.	E
4112		Loop sensor (LPS) does not turn off during paper feed from cassette 2.	E
4113		Loop sensor (LPS) does not turn off during paper feed from cassette 3 (paper feeder/large capacity feeder).	E
4114		Loop sensor (LPS) does not turn off during paper feed from cassette 4 (paper feeder/large capacity feeder).	E
4115		Loop sensor (LPS) does not turn off during paper feed from cassette 5 (side multi tray/side deck).	E
4116		Loop sensor (LPS) does not turn off during paper feed from cassette 6 (side paper feeder/side large capacity feeder).	E
4117		Loop sensor (LPS) does not turn off during paper feed from cassette 7 (side paper feeder/side large capacity feeder).	E
4118		Loop sensor (LPS) does not turn off during paper feed from duplex section.	E
4119		Loop sensor (LPS) does not turn off during paper feed from MP tray.	E
4201	Fuser eject sensor non arrival jam	Fuser eject sensor (FUES) does not turn on during paper feed from cassette 1.	E
4202		Fuser eject sensor (FUES) does not turn on during paper feed from cassette 2.	E
4203		Fuser eject sensor (FUES) does not turn on during paper feed from cassette 3 (paper feeder/large capacity feeder).	E
4204		Fuser eject sensor (FUES) does not turn on during paper feed from cassette 4 (paper feeder/large capacity feeder).	E
4205		Fuser eject sensor (FUES) does not turn on during paper feed from cassette 5 (side multi tray/side deck).	E
4206		Fuser eject sensor (FUES) does not turn on during paper feed from cassette 6 (side paper feeder/side large capacity feeder).	E
4207		Fuser eject sensor (FUES) does not turn on during paper feed from cassette 7 (side paper feeder/side large capacity feeder).	E
4208		Fuser eject sensor (FUES) does not turn on during paper feed from duplex section.	E
4209		Fuser eject sensor (FUES) does not turn on during paper feed from MP tray.	E

*: Refer to figure 1-4-1 for paper misfeed indication (see page 1-4-1).

Code	Contents	Conditions	Jam location*
4211	Fuser eject sensor stay jam	Fuser eject sensor (FUES) does not turn off during paper feed from cassette 1.	G
4212		Fuser eject sensor (FUES) does not turn off during paper feed from cassette 2.	G
4213		Fuser eject sensor (FUES) does not turn off during paper feed from cassette 3 (paper feeder/large capacity feeder).	G
4214		Fuser eject sensor (FUES) does not turn off during paper feed from cassette 4 (paper feeder/large capacity feeder).	G
4215		Fuser eject sensor (FUES) does not turn off during paper feed from cassette 5 (side multi tray/side deck).	G
4216		Fuser eject sensor (FUES) does not turn off during paper feed from cassette 6 (side paper feeder/side large capacity feeder).	G
4217		Fuser eject sensor (FUES) does not turn off during paper feed from cassette 7 (side paper feeder/side large capacity feeder).	G
4218		Fuser eject sensor (FUES) does not turn off during paper feed from duplex section.	G
4219		Fuser eject sensor (FUES) does not turn off during paper feed from MP tray.	G
4301	Duplex sensor 1 non arrival jam	Duplex sensor 1 (DUS1) does not turn on during paper feed from cassette 1.	G
4302		Duplex sensor 1 (DUS1) does not turn on during paper feed from cassette 2.	G
4303		Duplex sensor 1 (DUS1) does not turn on during paper feed from cassette 3 (paper feeder/large capacity feeder).	G
4304		Duplex sensor 1 (DUS1) does not turn on during paper feed from cassette 4 (paper feeder/large capacity feeder).	G
4305		Duplex sensor 1 (DUS1) does not turn on during paper feed from cassette 5 (side multi tray/side deck).	G
4306		Duplex sensor 1 (DUS1) does not turn on during paper feed from cassette 6 (side paper feeder/side large capacity feeder).	G
4307		Duplex sensor 1 (DUS1) does not turn on during paper feed from cassette 7 (side paper feeder/side large capacity feeder).	G
4309		Duplex sensor 1 (DUS1) does not turn on during paper feed from MP tray.	G

*: Refer to figure 1-4-1 for paper misfeed indication (see page 1-4-1).

Code	Contents	Conditions	Jam location*
4311	Duplex sensor 1 stay jam	Duplex sensor 1 (DUS1) does not turn off during paper feed from cassette 1.	F
4312		Duplex sensor 1 (DUS1) does not turn off during paper feed from cassette 2.	F
4313		Duplex sensor 1 (DUS1) does not turn off during paper feed from cassette 3 (paper feeder/large capacity feeder).	F
4314		Duplex sensor 1 (DUS1) does not turn off during paper feed from cassette 4 (paper feeder/large capacity feeder).	F
4315		Duplex sensor 1 (DUS1) does not turn off during paper feed from cassette 5 (side multi tray/side deck).	F
4316		Duplex sensor 1 (DUS1) does not turn off during paper feed from cassette 6 (side paper feeder/side large capacity feeder).	F
4317		Duplex sensor 1 (DUS1) does not turn off during paper feed from cassette 7 (side paper feeder/side large capacity feeder).	F
4319		Duplex sensor 1 (DUS1) does not turn off during paper feed from MP tray.	F
4401	Duplex sensor 2 non arrival jam	Duplex sensor 2 (DUS2) does not turn on during paper feed from cassette 1.	F
4402		Duplex sensor 2 (DUS2) does not turn on during paper feed from cassette 2.	F
4403		Duplex sensor 2 (DUS2) does not turn on during paper feed from cassette 3 (paper feeder/large capacity feeder).	F
4404		Duplex sensor 2 (DUS2) does not turn on during paper feed from cassette 4 (paper feeder/large capacity feeder).	F
4405		Duplex sensor 2 (DUS2) does not turn on during paper feed from cassette 5 (side multi tray/side deck).	F
4406		Duplex sensor 2 (DUS2) does not turn on during paper feed from cassette 6 (side paper feeder/side large capacity feeder).	F
4407		Duplex sensor 2 (DUS2) does not turn on during paper feed from cassette 7 (side paper feeder/side large capacity feeder).	F
4409		Duplex sensor 2 (DUS2) does not turn on during paper feed from MP tray.	F

*: Refer to figure 1-4-1 for paper misfeed indication (see page 1-4-1).

Code	Contents	Conditions	Jam location*
4411	Duplex sensor 2 stay jam	Duplex sensor 2 (DUS2) does not turn off during paper feed from cassette 1.	F
4412		Duplex sensor 2 (DUS2) does not turn off during paper feed from cassette 2.	F
4413		Duplex sensor 2 (DUS2) does not turn off during paper feed from cassette 3 (paper feeder/large capacity feeder).	F
4414		Duplex sensor 2 (DUS2) does not turn off during paper feed from cassette 4 (paper feeder/large capacity feeder).	F
4415		Duplex sensor 2 (DUS2) does not turn off during paper feed from cassette 5 (side multi tray/side deck).	F
4416		Duplex sensor 2 (DUS2) does not turn off during paper feed from cassette 6 (side paper feeder/side large capacity feeder).	F
4417		Duplex sensor 2 (DUS2) does not turn off during paper feed from cassette 7 (side paper feeder/side large capacity feeder).	F
4418		Duplex sensor 2 (DUS2) does not turn off during paper feed from duplex section.	F
4419		Duplex sensor 2 (DUS2) does not turn off during paper feed from MP tray.	F

*: Refer to figure 1-4-1 for paper misfeed indication (see page 1-4-1).

Code	Contents	Conditions	Jam location*
4601	Eject full sensor non arrival jam	Eject full sensor (EFS) does not turn on during paper feed from cassette 1.	G
4602		Eject full sensor (EFS) does not turn on during paper feed from cassette 2.	G
4603		Eject full sensor (EFS) does not turn on during paper feed from cassette 3 (paper feeder/large capacity feeder).	G
4604		Eject full sensor (EFS) does not turn on during paper feed from cassette 4 (paper feeder/large capacity feeder).	G
4605		Eject full sensor (EFS) does not turn on during paper feed from cassette 5 (side multi tray/side deck).	G
4606		Eject full sensor (EFS) does not turn on during paper feed from cassette 6 (side paper feeder/side large capacity feeder).	G
4607		Eject full sensor (EFS) does not turn on during paper feed from cassette 7 (side paper feeder/side large capacity feeder).	G
4608		Eject full sensor (EFS) does not turn on during paper feed from duplex section.	G
4609		Eject full sensor (EFS) does not turn on during paper feed from MP tray.	G
4611	Eject full sensor stay jam	Eject full sensor (EFS) does not turn off during paper feed from cassette 1.	G
4612		Eject full sensor (EFS) does not turn off during paper feed from cassette 2.	G
4613		Eject full sensor (EFS) does not turn off during paper feed from cassette 3 (paper feeder/large capacity feeder).	G
4614		Eject full sensor (EFS) does not turn off during paper feed from cassette 4 (paper feeder/large capacity feeder).	G
4615		Eject full sensor (EFS) does not turn off during paper feed from cassette 5 (side multi tray/side deck).	G
4616		Eject full sensor (EFS) does not turn off during paper feed from cassette 6 (side paper feeder/side large capacity feeder).	G
4617		Eject full sensor (EFS) does not turn off during paper feed from cassette 7 (side paper feeder/side large capacity feeder).	G
4618		Eject full sensor (EFS) does not turn off during paper feed from duplex section.	G
4619		Eject full sensor (EFS) does not turn off during paper feed from MP tray.	G

*: Refer to figure 1-4-1 for paper misfeed indication (see page 1-4-1).

Code	Contents	Conditions	Jam location*
4701	Switchback sensor non arrival jam	Switchback sensor (SBS) does not turn on during paper feed from cassette 1.	G
4702		Switchback sensor (SBS) does not turn on during paper feed from cassette 2.	G
4703		Switchback sensor (SBS) does not turn on during paper feed from cassette 3 (paper feeder/large capacity feeder).	G
4704		Switchback sensor (SBS) does not turn on during paper feed from cassette 4 (paper feeder/large capacity feeder).	G
4705		Switchback sensor (SBS) does not turn on during paper feed from cassette 5 (side multi tray/side deck).	G
4706		Switchback sensor (SBS) does not turn on during paper feed from cassette 6 (side paper feeder/side large capacity feeder).	G
4707		Switchback sensor (SBS) does not turn on during paper feed from cassette 7 (side paper feeder/side large capacity feeder).	G
4708		Switchback sensor (SBS) does not turn on during paper feed from duplex section.	G
4709		Switchback sensor (SBS) does not turn on during paper feed from MP tray.	G
4711	Switchback sensor stay jam	Switchback sensor (SBS) does not turn off during paper feed from cassette 1.	I
4712		Switchback sensor (SBS) does not turn off during paper feed from cassette 2.	I
4713		Switchback sensor (SBS) does not turn off during paper feed from cassette 3 (paper feeder/large capacity feeder).	I
4714		Switchback sensor (SBS) does not turn off during paper feed from cassette 4 (paper feeder/large capacity feeder).	I
4715		Switchback sensor (SBS) does not turn off during paper feed from cassette 5 (side multi tray/side deck).	I
4716		Switchback sensor (SBS) does not turn off during paper feed from cassette 6 (side paper feeder/side large capacity feeder).	I
4717		Switchback sensor (SBS) does not turn off during paper feed from cassette 7 (side paper feeder/side large capacity feeder).	I
4718		Switchback sensor (SBS) does not turn off during paper feed from duplex section.	I
4719		Switchback sensor (SBS) does not turn off during paper feed from MP tray.	I

*: Refer to figure 1-4-1 for paper misfeed indication (see page 1-4-1).

Code	Contents	Conditions	Jam location*
4901	BR conveying sensor 1 non arrival jam	BR conveying sensor 1 (BRCS1) does not turn on during paper feed from cassette 1.	G
4902		BR conveying sensor 1 (BRCS1) does not turn on during paper feed from cassette 2.	G
4903		BR conveying sensor 1 (BRCS1) does not turn on during paper feed from cassette 3 (paper feeder/large capacity feeder).	G
4904		BR conveying sensor 1 (BRCS1) does not turn on during paper feed from cassette 4 (paper feeder/large capacity feeder).	G
4905		BR conveying sensor 1 (BRCS1) does not turn on during paper feed from cassette 5 (side multi tray/side deck).	G
4906		BR conveying sensor 1 (BRCS1) does not turn on during paper feed from cassette 6 (side paper feeder/side large capacity feeder).	G
4907		BR conveying sensor 1 (BRCS1) does not turn on during paper feed from cassette 7 (side paper feeder/side large capacity feeder).	G
4908		BR conveying sensor 1 (BRCS1) does not turn on during paper feed from duplex section.	G
4909		BR conveying sensor 1 (BRCS1) does not turn on during paper feed from MP tray.	G
4911	BR conveying sensor 1 stay jam	BR conveying sensor 1 (BRCS1) does not turn off during paper feed from cassette 1.	J
4912		BR conveying sensor 1 (BRCS1) does not turn off during paper feed from cassette 2.	J
4913		BR conveying sensor 1 (BRCS1) does not turn off during paper feed from cassette 3 (paper feeder/large capacity feeder).	J
4914		BR conveying sensor 1 (BRCS1) does not turn off during paper feed from cassette 4 (paper feeder/large capacity feeder).	J
4915		BR conveying sensor 1 (BRCS1) does not turn off during paper feed from cassette 5 (side multi tray/side deck).	J
4916		BR conveying sensor 1 (BRCS1) does not turn off during paper feed from cassette 6 (side paper feeder/side large capacity feeder).	J
4917		BR conveying sensor 1 (BRCS1) does not turn off during paper feed from cassette 7 (side paper feeder/side large capacity feeder).	J

*: Refer to figure 1-4-1 for paper misfeed indication (see page 1-4-1).

Code	Contents	Conditions	Jam location*
4918	BR conveying sensor 1 stay jam	BR conveying sensor 1 (BRCS1) does not turn off during paper feed from duplex section.	J
4919		BR conveying sensor 1 (BRCS1) does not turn off during paper feed from MP tray.	J
5001	BR conveying sensor 2 non arrival jam	BR conveying sensor 2 (BRCS2) does not turn on during paper feed from cassette 1.	J
5002		BR conveying sensor 2 (BRCS2) does not turn on during paper feed from cassette 2.	J
5003		BR conveying sensor 2 (BRCS2) does not turn on during paper feed from cassette 3 (paper feeder/large capacity feeder).	J
5004		BR conveying sensor 2 (BRCS2) does not turn on during paper feed from cassette 4 (paper feeder/large capacity feeder).	J
5005		BR conveying sensor 2 (BRCS2) does not turn on during paper feed from cassette 5 (side multi tray/side deck).	J
5006		BR conveying sensor 2 (BRCS2) does not turn on during paper feed from cassette 6 (side paper feeder/side large capacity feeder).	J
5007		BR conveying sensor 2 (BRCS2) does not turn on during paper feed from cassette 7 (side paper feeder/side large capacity feeder).	J
5008		BR conveying sensor 2 (BRCS2) does not turn on during paper feed from duplex section.	J
5009		BR conveying sensor 2 (BRCS2) does not turn on during paper feed from MP tray.	J
5011	BR conveying sensor 2 stay jam	BR conveying sensor 2 (BRCS2) does not turn off during paper feed from cassette 1.	J
5012		BR conveying sensor 2 (BRCS2) does not turn off during paper feed from cassette 2.	J
5013		BR conveying sensor 2 (BRCS2) does not turn off during paper feed from cassette 3 (paper feeder/large capacity feeder).	J
5014		BR conveying sensor 2 (BRCS2) does not turn off during paper feed from cassette 4 (paper feeder/large capacity feeder).	J
5015		BR conveying sensor 2 (BRCS2) does not turn off during paper feed from cassette 5 (side multi tray/side deck).	J

*: Refer to figure 1-4-1 for paper misfeed indication (see page 1-4-1).

Code	Contents	Conditions	Jam location*
5016	BR conveying sensor 2 stay jam	BR conveying sensor 2 (BRCS2) does not turn off during paper feed from cassette 6 (side paper feeder/side large capacity feeder).	J
5017		BR conveying sensor 2 (BRCS2) does not turn off during paper feed from cassette 7 (side paper feeder/side large capacity feeder).	J
5018		BR conveying sensor 2 (BRCS2) does not turn off during paper feed from duplex section.	J
5019		BR conveying sensor 2 (BRCS2) does not turn off during paper feed from MP tray.	J
5101	BR eject sensor non arrival jam	BR eject sensor (BRES) does not turn on during paper feed from cassette 1.	J
5102		BR eject sensor (BRES) does not turn on during paper feed from cassette 2.	J
5103		BR eject sensor (BRES) does not turn on during paper feed from cassette 3 (paper feeder/large capacity feeder).	J
5104		BR eject sensor (BRES) does not turn on during paper feed from cassette 4 (paper feeder/large capacity feeder).	J
5105		BR eject sensor (BRES) does not turn on during paper feed from cassette 5 (side multi tray/side deck).	J
5106		BR eject sensor (BRES) does not turn on during paper feed from cassette 6 (side paper feeder/side large capacity feeder).	J
5107		BR eject sensor (BRES) does not turn on during paper feed from cassette 7 (side paper feeder/side large capacity feeder).	J
5108		BR eject sensor (BRES) does not turn on during paper feed from duplex section.	J
5109		BR eject sensor (BRES) does not turn on during paper feed from MP tray.	J

*: Refer to figure 1-4-1 for paper misfeed indication (see page 1-4-1).

Code	Contents	Conditions	Jam location*
5111	BR eject sensor stay jam	BR eject sensor (BRES) does not turn off during paper feed from cassette 1.	J
5112		BR eject sensor (BRES) does not turn off during paper feed from cassette 2.	J
5113		BR eject sensor (BRES) does not turn off during paper feed from cassette 3 (paper feeder/large capacity feeder).	J
5114		BR eject sensor (BRES) does not turn off during paper feed from cassette 4 (paper feeder/large capacity feeder).	J
5115		BR eject sensor (BRES) does not turn off during paper feed from cassette 5 (side multi tray/side deck).	J
5116		BR eject sensor (BRES) does not turn off during paper feed from cassette 6 (side paper feeder/side large capacity feeder).	J
5117		BR eject sensor (BRES) does not turn off during paper feed from cassette 7 (side paper feeder/side large capacity feeder).	J
5118		BR eject sensor (BRES) does not turn off during paper feed from duplex section.	J
5119		BR eject sensor (BRES) does not turn off during paper feed from MP tray.	J
6000	DF paper entry error	DF paper entry sensor (DFPES) turn on before the eject signal is output from the machine (4000-sheet finisher).	K
6001		DF paper entry sensor (DFPES) turn on before the eject signal is output from the machine (1000-sheet finisher).	K
6020	DF front cover open	DF front upper cover is opened during operation (4000-sheet finisher).	K
6021		DF front cover is opened during operation (1000-sheet finisher).	K
6041	DF top cover open	DF top cover is opened during operation (1000-sheet finisher).	K
6050	CF eject cover open	CF eject cover is opened during operation (4000-sheet finisher).	M
6060	MB cover open	MB cover is opened during operation (4000-sheet finisher).	L
6070	Center folding unit open	Center folding unit is opened during operation (4000-sheet finisher).	M
6080	CF left guide open	CF left guide is opened during operation (4000-sheet finisher).	M

*: Refer to figure 1-4-1 for paper misfeed indication (see page 1-4-1).

Code	Contents	Conditions	Jam location*
6100	DF paper entry sensor non arrival jam	DF paper entry sensor (DFPES) does not turned on even if a specified time has elapsed after the machine eject signal was received (4000-sheet finisher).	K
6101		DF paper entry sensor (DFPES) does not turned on even if a specified time has elapsed after the machine eject signal was received (1000-sheet finisher).	K
6110	DF paper entry sensor stay jam	DF paper entry sensor (DFPES) does not turned off within specified time of its turning on (4000-sheet finisher).	K
6111		DF paper entry sensor (DFPES) does not turned off within specified time of its turning on (1000-sheet finisher).	K
6200	DF sub eject sensor non arrival jam	DF sub eject sensor (DFSES) does not turn on within specified time of DF paper entry sensor (DFPES) turning on.	K
6210	DF sub eject sensor stay jam	DF sub eject sensor (DFSES) does not turned off within specified time of its turning on.	K
6300	DF middle eject sensor non arrival jam	DF middle eject sensor (DFMES) does not turn on within specified time of DF paper entry sensor (DFPES) turning on (4000-sheet finisher).	K
6301		DF middle eject sensor (DFMES) does not turn on within specified time of DF paper entry sensor (DFPES) turning on (1000-sheet finisher).	K
6310	DF middle eject sensor stay jam	DF middle eject sensor (DFMES) is not turned off within specified time of its turning on (4000-sheet finisher).	K
6311		DF middle eject sensor (DFMES) is not turned off within specified time of its turning on (1000-sheet finisher).	K
6400	DF tray upper surface sensor non arrival jam	DF tray upper surface sensor (DFTUSS) does not turn on within specified time of DF middle eject sensor (DFMES) turning on (4000-sheet finisher).	K
6401		DF tray upper surface sensor (DFTUSS) does not turn on within specified time of DF middle eject sensor (DFMES) turning on (1000-sheet finisher).	K
6410	DF tray upper surface sensor stay jam	DF tray upper surface sensor (DFTUSS) is not turned off within specified time of its turning on (4000-sheet finisher).	K
6411		DF tray upper surface sensor (DFTUSS) is not turned off within specified time of its turning on (1000-sheet finisher).	K

*: Refer to figure 1-4-1 for paper misfeed indication (see page 1-4-1).

Code	Contents	Conditions	Jam location*
6500	DF eject paper sensor non arrival jam	DF eject paper sensor (DFMTS) does not turn on within specified time of DF middle eject sensor (DFMES) turning on.	K
6510	DF eject paper sensor stay jam	DF eject paper sensor (DFMTS) is not turned off since the bundle discharge starts (4000-sheet finisher).	K
6511		DF eject paper sensor (DFMTS) is not turned off since the bundle discharge starts (1000-sheet finisher).	K
6600	DF drum sensor non arrival jam	DF drum sensor (DFDRS) does not turn on within specified time of DF paper entry sensor (DFPES) turning on.	K
6610	DF drum sensor stay jam	DF drum sensor (DFDRS) is not turned off within specified time of its turning on.	K
6710	Center folding unit stay jam	During paper conveying to center folding unit, DF drum sensor (DFDRS) is not turned off within specified time of its turning on.	K
6810	DF side registration sensor 1 stay jam	DF side registration sensor 1 (DFSRS1) is not turned off within specified time after driving the DF side registration motor 1 (DFSRM1) (4000-sheet finisher).	K
6811		DF side registration sensor 1 (DFSRS1) is not turned off within specified time after driving the DF side registration motor 1 (DFSRM1) (1000-sheet finisher).	K
6910	DF side registration sensor 2 stay jam	DF side registration sensor 2 (DFSRS2) is not turned off within specified time after driving the DF side registration motor 2 (DFSRM2) (4000-sheet finisher).	K
6911		DF side registration sensor 2 (DFSRS2) is not turned off within specified time after driving the DF side registration motor 2 (DFSRM2) (1000-sheet finisher).	K
7000	DF staple operation error	DF staple sensor (DFSTS) is not turned on within specified time after driving the DF staple motor (DFSTM) (4000-sheet finisher).	K
7001		DF staple sensor (DFSTS) is not turned on within specified time after driving the DF staple motor (DFSTM) (1000-sheet finisher).	K
7100	CF paper entry sensor non arrival jam	CF paper entry sensor (CFPES) is not turned on even if a specified time has elapsed after the machine eject signal was received.	M
7110	CF paper entry sensor stay jam	CF paper entry sensor (CFPES) is not turned off within specified time of its turning on.	M
7200	CF eject sensor non arrival jam	CF eject sensor (CFES) is not turned on within specified time since centerfold operation starts.	M
7210	CF eject sensor stay jam	During centerfold operation, CF eject sensor (CFES) is not turned off within specified time of its turning on.	M

*: Refer to figure 1-4-1 for paper misfeed indication (see page 1-4-1).

Code	Contents	Conditions	Jam location*
7300	CF eject sensor non arrival jam	CF eject sensor (CFES) is not turned on within specified time since three fold operation starts.	M
7310	CF eject sensor stay jam	During three fold operation, CF eject sensor (CFES) is not turned off within specified time of its turning on.	M
7400	CF side registration sensor 2 non arrival jam	CF side registration sensor 2 (CFSRS2) is not turned on within specified time after driving the CF side registration motor 2 (CFSRM2).	M
7500	CF side registration sensor 1 non arrival jam	CF side registration sensor 1 (CFSRS1) is not turned on within specified time after driving the CF side registration motor 1 (CFSRM1).	M
7600	CF staple operation error	CF staple sensor (CFSTS) is not turned on within specified time after driving the CF staple motor (CFSTM).	M
7700	CF paper conveying sensor non arrival jam	CF paper conveying sensor (CFPCS) is not turned on even if a specified time has elapsed after the machine eject signal was received.	M
7710	CF paper conveying sensor stay jam	CF paper conveying sensor (CFPCS) is not turned off within specified time of its turning on.	M
7800	MB eject sensor non arrival jam	MB eject sensor (MBES) is not turned on even if a specified time has elapsed after the machine eject signal was received.	L
7810	MB eject sensor stay jam	MB eject sensor (MBES) is not turned off within specified time of its turning on.	L
7900	Middle paddle error jam	DF paddle sensor (DFPDS) is not turned on within specified time after driving the DF middle motor (DFMM) (4000-sheet finisher).	K
7901		DF paddle sensor (DFPDS) is not turned on within specified time after driving the DF middle motor (DFMM) (1000-sheet finisher).	K
7950	Paper interval error jam	An illegal inter-page or inter-copy interval has occurred (4000-sheet finisher).	K
7951		An illegal inter-page or inter-copy interval has occurred (1000-sheet finisher).	K
9000	No original feed jam	DP feed sensor (DPFS) does not turn on within specified time during the first sheet feeding (Retry 5 times).	H
9001	DP original conveying jam	DP timing sensor (DPTS) turn off within the specified time since the sensor turn on.	H
9002	DP sensor stay jam	Sensor in the conveying system is on since original feeding starts.	H
9004	DP switchback jam 2	DP registration sensor (DPRS) is not turned on within specified time since original switchback operation starts.	H

*: Refer to figure 1-4-1 for paper misfeed indication (see page 1-4-1).

Code	Contents	Conditions	Jam location*
9005	No original feed jam 2	DP lift sensor 1 (DPLS1) does not turn on within specified time of the lift plate rising.	H
9006	DP switchback jam 3	DP eject sensor (DPES) is not turned on within specified time since original switchback operation starts.	H
9007	DP switchback jam 4	DP eject sensor (DPES) is not turned off within specified time since original switchback operation starts.	H
9008	No original feed jam 3	DP CIS sensor (DPCS) does not turn on within specified time of the paper feed starting.	H
9009	DP original conveying jam 2	Next feed original became the stand-by states of paper feed while reading the image.	H
9010	Document processor open	Document processor is opened during original feeding.	H
9011	DP top cover open	The DP top cover is opened during original feeding.	H
9020	Original skew feed jam	DP skew sensor (DPSS) does not turn on within specified time of DP registration sensor (DPRS) turning on.	H
9110	DP feed sensor stay jam	DP feed sensor (DPFS) does not turn off within specified time of DP timing sensor (DPTS) turning on.	H
9200	DP registration sensor non arrival jam	DP registration sensor (DPRS) does not turn on within specified time of DP feed sensor (DPFS) turning on.	H
9210	DP registration sensor stay jam	DP registration sensor (DPRS) does not turn off within specified time of DP timing sensor (DPTS) turning on.	H
9300	DP CIS sensor non arrival jam	DP CIS sensor (DPCS) does not turn on within specified time of DP registration sensor (DPFS) turning on.	H
9310	DP CIS sensor stay jam	DP CIS sensor (DPCS) does not turn off within specified time of DP registration sensor (DPFS) turning off.	H
9400	DP timing sensor non arrival jam	DP timing sensor (DPTS) does not turn on within specified time of DP feed sensor (DPFS) turning on.	H
9410	DP timing sensor stay jam	DP timing sensor (DPTS) does not turn off within specified time of DP feed sensor (DPFS) turning off.	H
9500	DP switchback sensor non arrival jam	DP switchback sensor (DPSBS) does not turn on within specified time of DP timing sensor (DPTS) turning on.	H
9600	DP eject sensor non arrival jam	DP eject sensor (DPES) does not turn on within specified time of DP timing sensor (DPTS) turning on.	H

*: Refer to figure 1-4-1 for paper misfeed indication (see page 1-4-1).

Code	Contents	Conditions	Jam location*
9610	DP eject sensor stay jam	DP eject sensor (DPES) does not turn off within specified time of DP timing sensor (DPTS) turning off.	H

*: Refer to figure 1-4-1 for paper misfeed indication (see page 1-4-1).

1-4-2 Troubleshooting

(1) First check items

If the paper is fed askew, jammed, curled, or leading-edge dog-eared, first perform to check the following items.

Check items	Check description	Corrective measures
Paper	1. Check the paper delivered is dog-eared, skewed, rumpled, loosely fused, or curled.	If a dog-ear has happened, check there are no objects existing in the conveying paths and, if any, fix. If the paper is fed askew or crumpled, perform the following No.2.If an inferior fusing or curling is observed and the fuser temperature is set to a abnormal value, when measured by performing maintenance mode U161, reset to the default. (see page 1-3-110)
	2. Check how paper is loaded in the cassette (deck). Check that the paper has been properly aligned with width adjuster cursor and the rear guide; it has been loaded without skewing; or it is not damaged. (Crumpled paper, main unit/DF jam)	Adjust the cursors to the size of the paper. (If paper is fed askew, perform a skew cancellation adjustment of the width adjuster cursor.) (see page 1-5-123) 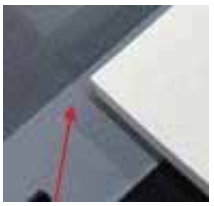
	3. Check how paper is loaded. Check if the cutting edge of the paper bundle inside is cumpled or bent.	If the cutting edge of the paper bundle is crumpled, fan the paper before loading. If the paper is folded, stretch before loading in the cassette
	4. If a large-capacity deck is being used, check how paper is loaded in the deck. Check if the paper inside the deck is placed above the guide.	Reload the paper so that its edges won't be situated above the platform.
	5. Check the paper is damp, wavy, or curled.	1. Load the paper bundle in the cassette upside down. 2. Load the paper bundle after rotating it 180°and reload. 3. Change the paper.
	6. Check if the paper loaded was stored in a continuously humid place.	Instruct the user to store paper in a dry, less humid place. Install a cassette heater and configure using U327. (see page 1-3-161)
	7. Check if the paper conforms to the requirements.	Isolate the cause of the problem by replacing the paper with the recommended paper. (see page 1-1-1)

Check items	Check description	Corrective measures
Paper	8. Check the paper ejected is dog-eared, skewed, rumpled, loosely fused, or curled.	If the maintenance mode U161 shows that the fuser temperature is set to an abnormal value, reset it to the default. (see page 1-3-110)
Settings/ Detection	1. Check if the margin is 4.0+1.5/-1.0mm from the leading edge of paper. 2. Perform U034 to check the reference mark is situated at 20mm±1mm from the edge. (Fuser jam) (see page 1-3-38)	If the check line is not situated at 20mm±1mm from the leading edge, adjust the leading margin by U402. (see page 1-3-167)
	3. Check the panel if the paper size is correctly detected and the cassette size is not fixed.(Paper jam caused by continously fed paper, DF Jam J611X) Perform U000 to obtain a Event Log to check if the paper size and the size of the paper loaded are met when jam has occurred and if the size of the original document and the paper size are met. see page 1-3-12)	If the paper size is incorrectly displayed, adjust the positions of the paper set guide cursors in accordance with the paper size, making sure that the paper is not askew to activate the size detector switch.
	4. Check that paper settings are made in accordance with the paper being used. (Jam caused by faulty separation)	Select Original/ Paper settings under common settings in the system menu to set media type and weight of paper.
Coveying unit	Check the main unit vertical conveying unit or the front and back parts and right and left parts of the deck's horizontal conveying unit are slightly strained and closed.	To open, first open the right-side conveying unit and close firmly. (Check the position of the safery switch)

Check items	Check description	Corrective measures
Conveying guide, approaching guide, feed-shift guide	1. Check that the foreign objects including scrips, paper clips, etc., do not exist in the paper conveying paths.	If foreign objects such as scrips, etc., remain in the paper conveying path, remove.
	2. Check that the paper conveying guide and the separation needles are not contaminated with toner, paper dusts, etc.	If dirty, clean the guide, ribs (by a cloth), and the separation needles (by a cleaning brush).If the ribs of the conveying guides were broken or deposited with toner, replace.
	3. Check that the paper conveying guide has no barrs, deformations, or abrasions; and it is properly mounted without being floated.	Clean the conveying guide or the paper approaching guide.Remove any protrusions including barrs.If floated, fix it properly.If deformation or abrasion is observed, replace.
	4. Check that the guide. Check that the guide is smoothly operative when manipulated.	If the guide is inoperative or won't operate smoothly, replace the guide or the unit.
	5. Check that the guide. Perform U033 to check the operation of the solenoid to sight-check or audio-check its action. (see page 1-3-37)	If the guide is inoperative or won't operate smoothly, re-assemble the guide or replace the solenoid or the unit.

Check items	Check description	Corrective measures
Conveying roller, feed roller	1. Check the conveying rollers have no paper dusts, toner, or foreign objects stucked.Check a variation of the external diameter of the roller or abrasion is not observed with the coveying roller.	Clean the conveying rollers or the pollyes. If variation in the external diameter or abrasion is observed, replace.
	2. Turn the cover safety switch on and perform U030 - Motor, U032 - Clutch, and U240 - Finished, check they operate normally. * : At checking the clutch by U032, confirm that the roller won't turn when the motor is turned on. (see page 1-3-34,1-3-36,1-3-134)	If the conveying motor or the clutch is inoperative, replace. If stained, replace the clutch. If the clutch is kept turned on due to a tensioned wire, reroute wires.
	3. Check the conveying roller rotates without overloading. Check the axle holder or the roller shaft are not contaminated. Check that the spring has not fallen off and is mounted so that it is properly applying pressure against the rollers or pulleys.	Clean the roller axle or the axle holder.Re-assemble it while checking the pressure of the spring.
Sensor	1. Check if it does not operate with smoothness due to an abnormal move or dropping off of the actuator of the coveying switch.	Re-assemble the actuator or the return spring.
	2. Check that the surface of the sensor and the recveptor black felt pieces are not contaminated with toner, paper dusts, etc.	If dirty, clean the sensor or the black felt piece.
	3. Perform U031 - Conveying switch and U241 - Finisher switch to check the sensors are normal without flickering, etc. (see page1-3-35, 1-3-136)	If U031has revealed that the sensor is inoperative, replace the switch.

Check items	Check description	Corrective measures
Static	Check if the location is susceptible to build static discharge at the conveying guide during printing.	Re-assemble and re-wire the static discharge sheet at the ejection unit or the metal guide at the tranfer unit so that they are properly grounded.

(2) Items and corrective actions relating to the device that will cause paper jam

Jam types	Check description	Corrective measures
No-paper-feed jam or the leading edge of paper is curled back at the position of the roller (J0501,J0502, J0503,J0504, J0505, J0506, J0507, J0509, J0523, J0524, J0525, J0526, J0527, J0545)	1. Check if the jammed paper or the printed paper has a tear caused by the roller at its leading edge.	Replace the primary feed roller.(Service life of rubber roller is 150k.) Increase the spring pressure to pinch the separation rollers if the component is undue to its expected life.Replace the spring.
	2. Check abrasion and paper dusts on the feed roller and forward rollers.	Clean the feed roller and the forward roller.Or, if not amended, replace.
	3. Perform U032 to check the forward roller and feed roller are rotating.	If disconnected or or stained, replace the primary feed clutch.
	4. Check if a primary feed roller of a wrong material of rubber is installed.	Distinguished by color: White x 2, black x 1 Check that the feed rollers are installed at (1) Feed Roller (Collar is white.), (2) Retard roller (black), and (3) Pickup Roller (white). 45-ppm/55-ppm devices * : If not, install then at the correct positions.
	5. Check that the conveying force of the pickup roller is sufficient.	Increase the conveying force during paper pickup by increasing the spring load of the pickup roller.
	6. Check the film is sufficiently protruded in front of approching the feed roller and the nip.(Too wide a gap against the feed roller.)	Amount of protrusion of film in approaching (Gap: 0.2 - 0.5 mm) must be maintained after adjustment.

Jam types	Check description	Corrective measures
No-paper-feed jam or the leading edge of paper is curled back at the position of the roller (J0501,J0502, J0503,J0504, J0505, J0506, J0507J0509, J0523, J0524, J0525, J0526, J0527, J0545)	7. Check the separation roller is not disturbed as a driving component is in contact with the frame during the separation roller is in motion.	If it gets in contact, replace the primary feed unit.
	8. Depress the release lever to release the pressure of the primary feed rollers to check that the retard holder falls.(The pressure by the retard roller to the feed roller is decreased.)	Modify mounting the retard holder fixing plate.
Multiple-feed Jam (J0511, J0512, J0513, J0514, J0516, J0517, J0519)	1. Check if the cutting edge of the paper bundle is crumpled or the cassette is loaded with multiple times of replenishing paper.	If the cutting edge of the paper bundle is crumpled or the cassette is loaded with multiple times of replenishing paper, load new paper.
	2. Checking paper size. Check that the size of the loaded paper and the paper size chosen on the operator panel are met.	If the paper size does not agree. 1. If the cassette cursors are open against the paper, set it properly. 2. Insert the cassette until the paper size detector switch is turned on. If the size is not detectable while automatic sizing is enabled, replace the size detection switch.
		If the paper size agrees 1. If paper other than complying the requirements such as coated paper, inkjet paper, etc., is used, replace the paper. 2. RE-assemble the pulley retard in the primary feed unit if it is mounted to the oppisite direction. 3. Check if the spring retard has not been fallen off of the mounting position. If the spring retard is not dropped off of the mount position, decrease the spring pressure that is applied to the separation rollers. 4. Replace the primary feed unit.
	3. Check if paper dusts and abrasion are observed on the paper fanning roller and retard roller.	If the paper fanning roller is dirty, clean. If abrasion is observed, replace.

Jam types	Check description	Corrective measures
Multiple-feed Jam (J0511, J0512, J0513, J0514, J0516, J0517, J0519)	4. Select the motor by U032 and check the clutch rotates following the other component when the motor is turned on. (see page 1-3-36)	If the clutch rotates following the other component and its stain is observed, replace the clutch.
Duplex No-original-feed Jam (J0508) Duplex Multiple-feed Jam (J0518)	Perform U031 to check if the duplex sensor 2 is detected. (see page 1-3-34)	If the duplex sensor 2 is not working, replace the duplex sensor 2.
Intermediate/ conveying sensor stay jam (J1313, J1314, J1513, J1514)	1. Check to see if the actuator is operative without hinderance.	If it won't operate without hinderance, re-assemble or replace the actuator's return spring.
	2. Perform U031 to check the operation of the sensor.	If the sensor is inoperative, replace.
	3. Select the motor by U032 and check if the coveying clutch rotates following the other component. (see page 1-3-36)	If stained, replace the clutch.Re-assmeble the clutch so that it is not continuously energized. (Change of wirings, etc.)
	4. Check if the conveying guide is twisted to be mounted.(If the mounting parts of the guide is floated, the actuator won't protrude sufficiently.)	If the bracket is twisted to be mounted, remove the screw fixing the conveying guide and properly mount the bracket in the right position and fix again.
	5. Check no wrinkles are observed at the sluck of paper during paper feeding.	Adjust the cursors to the size of the paper. (If paper is fed askew, perform a skew cancellation adjustment of the width adjuster cursor.) (see page 1-5-123)

Jam types	Check description	Corrective measures
Conveying sensor non arrival jam (J1503/ J1504) SM conveying sensor 2 stay jam (J3415, J3416, J3417)	1. Check to see if the actuator is operative without hinderance.	Re-assemble or replace the actuator's return spring.
	2. Perform U030 to check the operation of the motor. Check the transmission of the gear drive using U032. * : Check the conveying roller rotates and is movable in the direction of thrust without hinderance. (see page 1-3-36)	If the roller won't rotate without hinderance, loosen the screws for adjusting the position (at the gear train bracket) to mount the driving gears, and tighten so that a gap between the gears and frame is eliminated.
Loop sensor non arrival jam (J4101, J4102, J4103, J4104, J4105, J4106, J4107)	1. Check no wrinkles are observed at the sluck of paper during paper feeding.	Adjust the cursors to the size of the paper. (If paper is fed askew, perform a skew cancellation adjustment of the width adjuster cursor.) (see page 1-5-123)
	2. Check that the paper is entirely loaded inside the cassette without being skewed.	Reload paper.
Fuser eject sensor stay jam (J421X) Ejection-full sensor non arrival jam (J460X) Inversion sensor non arrival jam (J470X)	1. If paper jam occurrs at the feedshift guide in the eject unit, check if the guide is operative without hinderance.	If the distance between the housing and the feedshift guide is too small for the guide to move without hinderance, replace the eject unit.
	2. Perform U031 to check if the eject sensor does not show a false detection. (see page 1-3-35)	Replace the defective eject sensor or the eject unit.

Jam types	Check description	Corrective measures
Duplex sensors 1 and 2, stuck/ non arrival Jam (J43XX, J44XX)	1. Check that the duplex rollers cause slipage in feeding paper.	Clean or replace the duplex roller in the coveying unit.
	2. Perform U031 to check if the duplex sensors 1 and 2 do not show false detections.	Replace the defective duplex sensors 1 and 2 or the coveying unit.
	3. Check if the second side of plain paper is curled at its tail and slacked in the middle making the switch disguised as no existance of paper.	Replace the paper with new paper.Try feeding paper lengthwise.
BR conveying sensor 1/2 non arrival/stay jam (J49XX) Eject sensor non arrival jam (J50XX) Eject sensor stay jam (J51XX) DF paper entry error JAM (J600X)	1. Check contamination of the rollers of the bridge eject unit.	Clean or replace the rollers.
	2. Check contamination or abrasion of the axle holders of the bridge eject unit.	Clean the axle holder or replace with a new axle holder.
	3. Check the location the bridge relay conveying unit is mounted.	Re-mount.
DF conveying sensor non arrival jam (J610X) DF conveying sensor stay jam (J611X)	1. Check it the main unit and the DF are vertically flush with each other.	Perform the height adjustment by referring to the installation instructions. 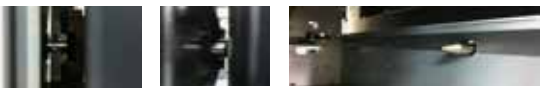 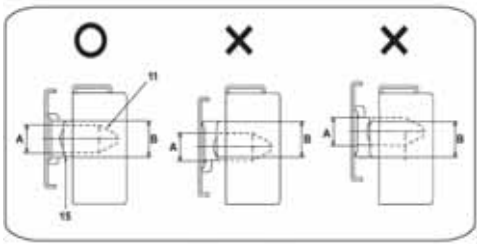

Jam types	Check description	Corrective measures
DF conveying sensor non arrival jam (J610X) DF conveying sensor stay jam (J611X)	2. Check if the jammed paper has a dog-ear.	2.If a down-curled sheet is jammed at the DF conveying guide ribs by being dog-eared, replace the DF conveying lower guide. 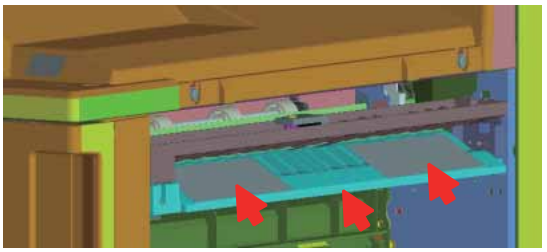
	3. Check if dog-ears are caused within the punch unit.	If a welding protrusion on the coveying side causes paper to be trapped, try replacing the punch unit. 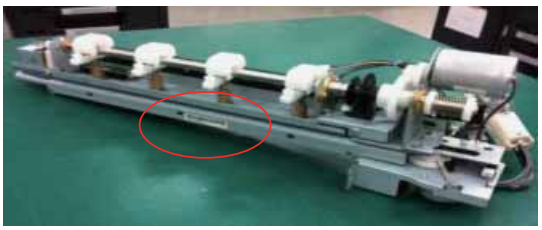
DF intermediate sensor stay jam (J631X) DF main tray ejection stay JAM (J641X) DF eject sensor non arrival jam (J6500) DF eject sensor stay jam (J651X)	1. If there is not the jammed paper which is causing J631, at the paper processing area, check to see if the actuator (DF middle sensor) is operative. 	Re-mount the actuator.

Jam types	Check description	Corrective measures

DF intermediate sensor stay jam (J631X)
DF main tray ejection stay JAM (J641X)
DF eject sensor non arrival jam (J6500)
DF eject sensor stay jam (J651X)
	2. Check the range of the up and down movement of the ejection guide.
	Check if the operating position after feeding in the first sheet is normal.
	(1)If it moves askew (due to the forward and backward shift of phase on the eject guide)
	(2)If the range of motion is too small
	Check if the gap between the ejection roller and the ejection pulleys is approximately 3.5 - 5.5 mm.
	(Check gaps while making paper still in the intermediate process tray.)
		If the gap is not correct, fix balance of the bundle eject unit.
		If (1): Correct the phase shifting with meshing of the front and back gears.
		(Turn on U240 - Motor-EjectUnlock (30) to check the balance of the front and back rollers with the bundle eject unit opened.see page 1-3-134)
		 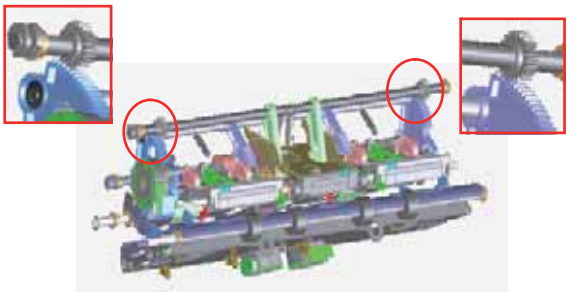
		If (2): Adjust the positioning of or replace the Mount PI upper guide.

	3. Execute U240 Motor - Width Test A3/LD to adjust the position of the width adjuster cursor of the process tray. Check if the cursor is located at 0 - +0.5 from the paper edge. Or check if the cursor is abnormally shifted. (The DF and the main unit paper sources) (see page 1-3-134)	If the width adjuster cursor is wrongly positioned, perform U246 Finisher - Width Front HP/Width Tail HP. (see page 1-3-142) 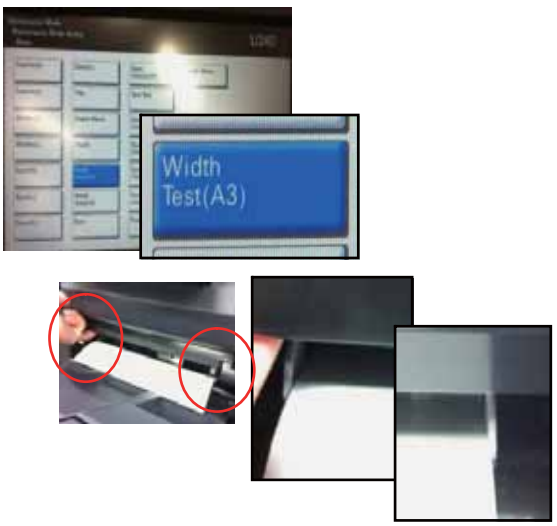

Jam types	Check description	Corrective measures
DF intermediate sensor stay jam (J631X) DF main tray ejection stay JAM (J641X) DF eject sensor non arrival jam (J6500) DF eject sensor stay jam (J651X)	4.With stapling at one point with about 65 sheets, check for the failure on the bundle when it is delivered in the shape of an arc. 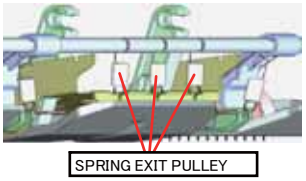 	1. If a wire from the ejection motor is pinched by other component or a connector is loosely connected, correct. If a loss of synchronism is observed with the ejection motor due to lack of torque, replace the motor. 2. If paper slippage occurs due to the lack of pressure by the ejection rollers, check if the pressure sufficient (3 springs, at the center). If a malfunction to encumber the ejection rollers to generate pressure is observed, correct.
	5. With stapling set at 2 points and about 50 sheets, run a test print and check the print bundle delivered for the failure on the direction of ejection and the front and back side, abrupt alignment, and overall alignment.	If the paper is curled, change the direction of loading paper or replace the paper.
	6. Check if a floated staple, buckling, or stapling at a wrong position is occurred.	Configure each of the cassettes for the weight of the paper loaded.replace the paper. Adjust the stapling home position by U246 - Staple HP. (see page 1-3-142)
	7. Check stapling has been properly done if the paper bundle cannot be ejected causing J-6510. * : 4000-sheets finisher	Provide instructions with the following points emphasized. 1. Tap the paper to align its ends and load all the way into the cassette. 2. After settings, let go off of the paper. (Allows automatic ehection after stapling.) 3. Do not remove paper before the paper bundle is ejected once it is stapled.
DF drum sensor non arrival jam (J6600)	Paper is jammed with its leading edge caught by the diversion solenoid 1 in the middle of coveying paths.	Check it the axle of the diverting solenoid 1 is inserted all the way into the lever of the DF diverting solenoid 1, and insert the lever firmly if it is not.

Jam types	Check description	Corrective measures
DF drum sensor stay jam (J6610)	1. Check if the size and orientation of the original document and the paper used match.	If not matched, load the paper in the size and orientation configured for the cassette or the manual feed tray.
	2. Check to see if the actuator (DF drum sensor) is operative without hinderance.	If the return spring has been fallen off of the fixing position, fix it properly.If the actuator won't operate smoothly, replace.
Center-folding unit conveying stay JAM (J6710) Center-folding unit conveying sensor stay JAM (J7710)	If paper is jammed before reaching the center-folding unit, check that the drive train gears are in mesh.	If the drive transmission gears are not in mesh, replace the pivot pin of the CF lock lever and the DF fixing pin.

(3) Paper jam at feeding from cassette 1
Electrical parts that could cause paper jam during paper travelling at the primary feeding (to regist roller)

Timing of detection

Jam code
J0501,J0511,J1301,J1311,J4001,J4011

Measures

Related parts	
Paper feed motor(PFM)	Registration sensor (RS)
Paper feed clutch 1(PFCL1)	Engine PWB (EPWB)
Assist clutch 1 (ACSL1)*2	Feed PWB 2 (FPWB2)
Middle clutch (MCL)*1 Middle motor (MM) *2	Feed PWB 1 (FPWB1)
Registration clutch (RCL)*1 Registration motor (RM)*2	
Feed sensor 1 (FS1)	
Middle sensor (MS)	

*1: 30 ppm model /35 ppm model only. *2: 45 ppm model /55 ppm model only.

Checking procedure at the occurrence of J0501	Corrective action at the occurrence of J0501	On/Off control signal output connector (terminal), point of checking connection
1	Items for Initial Checks	see page 1-4-29
2	Feed sensor 1 (FS1): Conduct connectivity check, mounting location check, operation check (U031)	Feed PWB 2 YC8-11
3	Paper feed clutch (PFCL1): Operation check (U032)	Feed PWB 2 YC4-1
4	Paper feed motor : Operation check (U030)	Feed PWB 2 YC2-3(RDY),1(REM)
5	Feed PWB 2: Replace	
6	Engine PWB : Replace	

Checking procedure at the occurrence of J13X	Corrective action at the occurrence of J13X1	On/Off control signal output connector (terminal), point of checking connection
1	Items for Initial Checks	see page 1-4-29
2	Middle sensor (MS) : Conduct connectivity check, mounting location check, operation check (U031)	Feed PWB 2 YC8-9
3	Assist clutch 1 (ACSL1)*2 :Operation check (U032)	Feed PWB 2 YC10-1
4	Middle clutch (MCL)*1 : Middle motor (MM)*2:Operation check (U032/30)	Feed PWB 2 YC7-14 / YC7-1 to 4
5	Feed PWB 2: Replace	
6	Engine PWB : Replace	

*1: 30 ppm model /35 ppm model only. *2: 45 ppm model /55 ppm model only.

Checking procedure at the occurrence of J40X1	Corrective action at the occurrence of J40X1	On/Off control signal output connector (terminal), point of checking connection
1	Items for Initial Checks	see page 1-4-29
2	Registration sensor (RS): Conduct connectivity check, mounting location check, operation check (U031) and U051 - Slack Margin Settings.	Feed PWB 2 YC7-12
3	Registration clutch (RCL)*1 Registration motor (RM)*2: Operation check (U032/30)	Feed PWB 1 YC22-2 / YC25-1 to 4
4	Feed PWB 1 : Replace	
5	Engine PWB : Replace	

*1: 30 ppm model /35 ppm model only. *2: 45 ppm model /55 ppm model only.

(4) Paper jam at feeding from cassette 2
Electrical parts that could cause paper jam during paper travelling at the primary feeding (to regist roller)

Timing of detection

Jam code
J0502,J0512,J1302,J1312,J1502,J1512,J4002,J4012

Corrective Action

Related parts	
Paper feed motor(PFM)	Engine PWB (EPWB)
Paper feed clutch 2 (PFCL2)	Feed PWB 2 (FPWB2)
Assist clutch 2 (ACSL2)*2	Feed PWB 1 (FPWB1)
Middle clutch (MCL)*1 Middle motor (MM)*2	
Registration clutch (RCL)*1 Registration motor (RM)*2	
Vertical conveying clutch (PCCL)	
Feed sensor 2 (FS2)	
Paper conveying sensor (PCS)	
Middle sensor (MS)	
Registration sensor (RS)	

*1: 30 ppm model /35 ppm model only. *2: 45 ppm model /55 ppm model only.

Checking procedure at the occurrence of J05X2	Corrective action at the occurrence of J05X2	On/Off control signal output connector (terminal), point of checking connection
1	Items for Initial Checks	see page 1-4-29
2	Feed sensor 1 (FS1): Conduct connectivity check, mounting location check, operation check (U031)	Feed PWB 2 YC8-23
3	Paper feed clutch 2 (PFCL2): Operation check (U032)	Feed PWB 2 YC4-1
4	Paper feed motor : Operation check (U030)	Feed PWB 2 YC2-3(RDY), 5(REM)
5	Feed PWB 2: Replace	
6	Engine PWB : Replace	

Checking procedure at the occurrence of J13X2	Corrective action at the occurrence of J13X2	On/Off control signal output connector (terminal), point of checking connection
1	Items for Initial Checks	see page 1-4-29
2	Middle sensor (MS) : Conduct connectivity check, mounting location, check operation check (U031)	Feed PWB 2 YC8-9
3	Vertical conveying clutch (PCCL): Operation check (U032)	Feed PWB 2 YC5-3
4	Middle clutch (MCL)*1 Middle motor (MM)*2: Operation check (U032/30)	Feed PWB 2 YC7-14 / YC7-1 to 4
5	Feed PWB 2: Replace	
6	Engine PWB : Replace	

*1: 30 ppm model /35 ppm model only. *2: 45 ppm model /55 ppm model only

.

Checking procedure at the occurrence of J15X2	Corrective action at the occurrence of J15X2	On/Off control signal output connector (terminal), point of checking connection
1	Items for Initial Checks	see page 1-4-29
2	Conveying sensor (PCS) I/O check and sensor check (U031)	Feed PWB 2 YC6-3
3	Vertical conveying clutch (PCCL): Operation check (U032)	Feed PWB 2 YC5-3
4	Assist clutch 2 (ACSL2) *2:Operation check (U032)	Feed PWB 2 YC12-1
5	Feed PWB 2: Replace	
6	Engine PWB : Replace	

*2: 45 ppm model /55 ppm model only.

Checking procedure at the occurrence of J40X2	Corrective action at the occurrence of J40X2	On/Off control signal output connector (terminal), point of checking connection
1	Items for Initial Checks	see page 1-4-29
2	Registration sensor (RS): Conduct connectivity check, mounting location check, operation check U031 and U051 - Slack Margin Settings.	Feed PWB 2 YC7-12

Checking procedure at the occurrence of J40X2	Corrective action at the occurrence of J40X2	On/Off control signal output connector (terminal), point of checking connection
3	Registration clutch (RCL)*1 Registration motor (RM)*2: Operation check (U032/30)	Feed PWB 1 YC22-2 / YC25-1 to 4
4	Feed PWB 1 : Replace	
5	Engine PWB : Replace	

*1: 30 ppm model /35 ppm model only. *2: 45 ppm model /55 ppm model only.

(5) Paper jam during manual feeding
Electrical parts that could cause paper jam during paper travelling at the primary feeding (to regist roller)

Timing of detection

Jam code
J0131,J0509,J0519,J4009,J4019

Corrective Action

Related parts	
Paper feed motor(PFM)	Engine PWB (EPWB)
Manual feed clutch (MPPFCL)	Feed PWB 1 (FPWB1)
Middle clutch (MCL)*1 Middle motor (MM)*2	Relay PWB (RYPWB) * : In paper conveying unit
Registration clutch (RCL)*1 Registration motor (RM)*2	
MP feed sensor (MPFS)	
Registration sensor (RS)	
Manual feed lift motor (MPLM)	
MP lift sensor 1 (MPLS1)	
MP lift sensor 2 (MPLS2)	

*1: 30 ppm model /35 ppm model only. *2: 45 ppm model /55 ppm model only.

Checking procedure at the occurrence of J05X9	Corrective action at the occurrence of J05X9	On/Off control signal output connector (terminal), point of checking connection
1	Items for Initial Checks	see page 1-4-29
2	MP feed sensor (MPFS): Conduct connectivity check, mounting location check, operation check (U031)	Feed PWB 1 YC17-9
3	Manual feed conveying clutch (CL): Operation check (U032)	Feed PWB 2 YC4-1
4	Middle clutch (MCL)*1 Middle motor (MM)*2: Operation check (U032/30)	Feed PWB 2 YC7-14 / YC7-1 to 4
5	Feed PWB 2: Replace	
6	Engine PWB : Replace	

*1: 30 ppm model /35 ppm model only. *2: 45 ppm model /55 ppm model only.

Checking procedure at the occurrence of J40X9	Corrective action at the occurrence of J40X9	On/Off control signal output connector (terminal), point of checking connection
1	Items for Initial Checks	see page 1-4-29
2	Registration sensor (RS): Conduct connectivity check, mounting location check, operation check (U031)	Feed PWB 2 YC7-12
3	Registration clutch (RCL)*1 Registration motor (RM)*2: Operation check (U032/30)	Feed PWB 1 YC22-2 / YC25-1 to 4
4	Feed PWB 1 : Replace	
5	Engine PWB : Replace	

*1: 30 ppm model /35 ppm model only. *2: 45 ppm model /55 ppm model only.

Checking procedure at the occurrence of J0131	Corrective action at the occurrence of J0131	On/Off control signal output connector (terminal), point of checking connection
1	Items for Initial Checks	see page 1-4-29
2	Manual feed lift base elevation check: 1. Up-and-down movability of the paper lift base of the manual feed tray. 2. Check if the lift lever is in contact with the lift motor cam (re-mount the manual feed table).	-

Checking procedure at the occurrence of J0131	Corrective action at the occurrence of J0131	On/Off control signal output connector (terminal), point of checking connection
3	MP lift sensors 1 and 2: Check for connection and the position of the sensor to be mounted.	Relay PWB (YC3-5, YC3-8) (YC12)
4	MP lift motor: Check if the paper lift base is raised as the motor rotates.	Relay PWB(YC3-11), (YC12)
5	Feed PWB 1 : Replace	Feed PWB 1(YC17),(YC1)
6	Engine PWB : Replace	Engine PWB (YC6)

(6) Paper jam at the duplex re-feeding part

Electrical parts that could cause paper jam during paper travelling at the primary feeding (to regist roller)

Timing of detection

Jam code
J0508,J0518

Corrective Action

Related parts	
Paper feed motor(PFM) * : 30 ppm model /35 ppm model only.	Engine PWB (EPWB)
Duplex clutch 2 (DUCL2)*1 Duplex motor 2 (DUM2)*2	Feed PWB 1 (FPWB1)
Duplex sensor 2 (DUS2)	

*1: 30 ppm model /35 ppm model only. *2: 45 ppm model /55 ppm model only.

Checking procedure at the occurrence of J05X8	Corrective action at the occurrence of J05X8	On/Off control signal output connector (terminal), point of checking connection
1	Items for Initial Checks	see page 1-4-29
2	Duplex sensor 2 (DUS2): Conduct connectivity check, mounting location check, operation check (U031)	Feed PWB 1 YC 14-5
3	Duplex clutch 2 (DUCL2)*1 Duplex motor 2 (DUM2)*2: Operation check (U032/30)	Feed PWB 1 YC 14-12 / YC14-14 to 17
4	Check that the drive from the paper feed motor is transferred to the duplex roller. * : 30 ppm model /35 ppm model only.	
5	Feed PWB 1 : Replace	
6	Engine PWB : Replace	

*1: 30 ppm model /35 ppm model only. *2: 45 ppm model /55 ppm model only.

(7) Electrical parts that could cause paper jam at the Secondary transfer part

Timing of detection

Jam code
J410x,J411x

Corrective Action

Related parts	
Paper feed motor(PFM) * : 30 ppm model /35 ppm model	Engine PWB (EPWB)
Secondary transfer roller - transfers the drive from the transfer belt	Feed PWB 1 (FPWB1)
Registration clutch (RCL)*1 Registration motor (RM)*2	Relay PWB (RYPWB) * : In paper conveying unit
Loop sensor (LPS)	

*1: 30 ppm model /35 ppm model only. *2: 45 ppm model /55 ppm model only.

Checking procedure at the occurrence of J41XX	Corrective action at the occurrence of J41XX	On/Off control signal output connector (terminal), point of checking connection
1	Items for Initial Checks	see page 1-4-29
2	Loop sensor (LPS) : Conduct connectivity check, mounting location check, operation check (U031)	Feed PWB 1 YC23-11
3	Registration clutch (RCL)*1 Registration motor (RM)*2: Operation check (U032/30)	Feed PWB 1 YC22-2 / YC25-1 to 4
4	Check that the drive from the Intermediate transfer belt unit is transferred to the second transfer roller.	
5	Check that the drive from the paper feed motor is transferred to the regist roller. * : 30 ppm model /35 ppm model only	
6	Check how the conveying unit and the main unit drawer are connected (such as a fallen pin) and, if they are normal, replace the relay PWB.	
7	Feed PWB 1 : Replace	
8	Engine PWB : Replace	

*1: 30 ppm model /35 ppm model only. *2: 45 ppm model /55 ppm model only.

(8) Electrical parts that could cause paper jam at the fuser and eject part

Timing of detection

Jam code
J420x,J421x,J460x,J461x,J470x,J471x

Corrective Action

Related parts	
Fuser motor (FUM)	Engine PWB (EPWB)
Eject motor (EM)	Front PWB (FRPWB)
Feedshift solenoid (FSSOL)	
Fuser eject sensor (FUES)	
Eject full sensor (EFS)	
Switchback sensor (SBS)	
JS eject motor (JSEM) * : The job separator is installed.	

Checking procedure at the occurrence of J42XX	Corrective action at the occurrence of J42XX	On/Off control signal output connector (terminal), point of checking connection
1	Items for Initial Checks	see page 1-4-29
2	Fuser eject sensor (FUES) : Conduct connectivity check, mounting location check, operation check (U031)	Engine PWB YC26-A13
3	feedshift solenoid (FSSOL): feedshift guide check (U033)	Front PWB YC5-19
4	Fuser motor (FUM) : Operation check (U030)	Feed PWB 1 YC18-3(RDY), 5(REM)
5	Engine PWB : Replace	

Checking procedure at the occurrence of J46XX	Corrective action at the occurrence of J46XX	On/Off control signal output connector (terminal), point of checking connection
1	Items for Initial Checks	see page 1-4-29
2	Eject full sensor (EFS) : Conduct connectivity check, mounting location check, operation check (U031)	Front PWB YC5-16
3	feedshift solenoid (FSSOL): feedshift guide check (U033)	Front PWB YC5-19
4	Eject motor (EM) : Operation check (U030)	Front PWB YC5-8 to 11
5	Front PWB (FRPWB): Replace	
6	Engine PWB : Replace	

Checking procedure at the occurrence of J47XX	Corrective action at the occurrence of J47XX	On/Off control signal output connector (terminal), point of checking connection
1	Items for Initial Checks	see page 1-4-29
2	Switchback sensor (SBS) : Conduct connectivity check, mounting location check, operation check (U031)	Front PWB YC5-13
3	feedshift solenoid (FSSOL): feedshift guide check (U033)	Front PWB YC5-19
4	Job separator eject motor (JSEM): Operational check (U030)	JS main circuit PWB: YC2-4, 5, 6, 7, YC-1 Feed PWB 1: YC20
5	Engine PWB : Replace	Engine PWB : YC7 Front PWB : YC3

(9) Electrical parts that could cause paper jam at the duplex part

Timing of detection

Jam code
J430x,J431x,J440x,J441x

Corrective Action

Related parts	
Paper feed motor(PFM) * : 30 ppm model /35 ppm model	Engine PWB (EPWB)
Duplex clutch 1 (DUCL1)*1 Duplex motor 1 (DUM1)*2	Relay PWB (RYPWB) * : In paper conveying unit
Duplex clutch 2 (DUCL2)*1 Duplex motor 2 (DUM2)*2	Relay PWB (RYPWB) * : In paper conveying unit
Duplex sensor 1 (DUS1)	Feed PWB 1 (FPWB1) J440X
Duplex sensor 2 (DUS2)	

*1: 30 ppm model /35 ppm model only. *2: 45 ppm model /55 ppm model only.

Checking procedure at the occurrence of J43XX	Corrective action at the occurrence of J43XX	On/Off control signal output connector (terminal), point of checking connection
1	Items for Initial Checks	see page 1-4-29
2	Duplex sensor 1 (DUS1) : Conduct connectivity check, mounting location check, operation check (U031)	Feed PWB 1 YC23-1
3	Duplex clutch 1 (DUCL1)*1 Duplex motor 1 (DUM1)*2: Operation check (U032/30)	Feed PWB 1 YC23-4 /YC23-6 to 9
4	Is the drive from the paper feed motor chaned to the upper and lower duplex rollers? * : 30 ppm model /35 ppm model only	
5	Check how the conveying unit and the main unit drawer are connected and, if they are normal, replace the feed circuit PWB1.	
6	Feed PWB 1(FPWB1) : relpace	
7	Engine PWB : Replace	
8	Relay PWB (RYPWB) : Replace	

*1: 30 ppm model /35 ppm model only. *2: 45 ppm model /55 ppm model only.

Checking procedure at the occurrence of J44XX	Corrective action at the occurrence of J44XX	On/Off control signal output connector (terminal), point of checking connection
1	Items for Initial Checks	see page 1-4-29
2	Duplex sensor 2 (DUS2) : Conduct connectivity check, mounting location check, operation check (U031)	Feed PWB 1 YC14-5
3	Duplex clutch 2 (DUCL2)*1 Duplex motor 2 (DUM2)*2: Operation check (U032/30)	Feed PWB 1 YC14-12 / YC14-14 to 17
4	Is the drive from the paper feed motor chaned to the upper and lower duplex rollers? * : 30 ppm model /35 ppm model only	
5	Check how the conveying unit and the main unit drawer are connected and, if they are normal, replace the feed circuit PWB1.	
6	Feed PWB 1(FPWB1) : relpace	
7	Engine PWB : Replace	
8	Relay PWB (RYPWB) : Replace	

*1: 30 ppm model /35 ppm model only. *2: 45 ppm model /55 ppm model only.

(10) Electrical parts that could cause paper jam at the BR (bridge) part

Timing of detection

Jam code
J490x,J491x,J500x,J501x,J510x,J511x

Corrective Action

Related parts	
BR conveying motor 1 (BRCM1)	Engine PWB (EPWB)
BR conveying motor 2 (BRCM2)	BR PWB (BRPWB)
BR conveying sensor 1 (BRCS1)	
BR conveying sensor 2 (BRCS2)	
BR eject sensor (BRES)	
BR feedshift solenoid (BRSOL)	

Checking procedure at the occurrence of J49XX	Corrective action at the occurrence of J49XX	On/Off control signal output connector (terminal), point of checking connection
1	Items for Initial Checks	see page 1-4-29
2	BR conveying sensor 1 (BRCS1) : Conduct connectivity check, mounting location check, operation check (U031)	BR PWB YC6-2
3	BR conveying motor 1 (BRCM1) : Operation check (U030)	BR PWB YC7-1 to 4
4	BR PWB (BRPWB) : Replace	
5	Engine PWB : Replace	

Checking procedure at the occurrence of J50XX	Corrective action at the occurrence of J50XX	On/Off control signal output connector (terminal), point of checking connection
1	Items for Initial Checks	see page 1-4-29
2	BR conveying sensor 2 (BRCS2) : Conduct connectivity check, mounting location check, operation check (U031)	BR PWB YC4-2
3	BR conveying motor 2 (BRCM2) : Operation check (U030)	BR PWB YC7-5 to 8
4	BR PWB (BRPWB) : Replace	

Checking procedure at the occurrence of J50XX	Corrective action at the occurrence of J50XX	On/Off control signal output connector (terminal), point of checking connection
5	Engine PWB : Replace	

Checking procedure at the occurrence of J51XX	Corrective action at the occurrence of J51XX	On/Off control signal output connector (terminal), point of checking connection
1	Items for Initial Checks	see page 1-4-29
2	BR eject sensor (BRES) : Conduct connectivity check, mounting location check, operation check (U031)	Engine PWB YC20-17
3	BR feedshift solenoid (BRSOL): Check for switching feedshift guide (U033)	Engine PWB YC20-17
4	BR PWB (BRPWB) : Replace	
5	Engine PWB : Replace	

(11) Electrical parts that could cause paper jam at the DF paper entry,feedshift and subtray left eject part

Timing of detection

Jam code
J610x,J611x,J620x,J621x,J630x,J631x

Corrective Action

Related parts	
DF paper entry motor (DFPEM)	DF feedshift solenoid 3 (DFFSSOL)
DF middle motor (DFMM)	DP main PWB (DFMPWB)
DF eject motor (DFEM)	
BR conveying motor 1 (BRCM1)	
BR conveying motor 2 (BRCM2)	
DF paper entry sensor (DFPES)	
DF middle sensor (DFMES)	
DF sub eject sensor (DFSES)	

Checking procedure at the occurrence of J61XX	Corrective action at the occurrence of J61XX	On/Off control signal output connector (terminal), point of checking connection
1	Items for Initial Checks	see page 1-4-29
2	DF paper entry sensor (DFPES) : Conduct connectivity check, mounting location check, operation check (U241:Finisher HP)	DF main PWB YC21-9
3	DF feedshift solenoid 3 (DFFSSOL): Check to see the feedshift guide 3 is switchable (U240: Solenoied - Subtray)	DF main PWB YC18-12,13
4	DF paper entry motor (DFPEM) : Operation check (U240: Motor →Feed In(H),Feed In(L))	DF main PWB YC12-13 to 16
5	BR conveying motor 1 (BRCM1) , BR conveying motor 2 (BRCM2) : Operation check (U030: Bridge1 , Bridge2)	
6	DF main PWB(DFMPWB) : Replace	

Checking procedure at the occurrence of J62XX	Corrective action at the occurrence of J62XX	On/Off control signal output connector (terminal), point of checking connection
1	Items for Initial Checks	see page 1-4-29
2	DF sub eject sensor (DFSES) : Conduct connectivity check, mounting location check, operation check (U241)	DF main PWB YC21-3
3	DF feedshift solenoid 3 (DFFSSOL): Check to see the feedshift guide 3 is switchable (U240)	DF main PWB YC18-12,13
4	DF paper entry motor (DFPEM) : Operation check (U240)	DF main PWB YC12-13 to 16
5	DF eject motor (DFEM) : Operation check (U240)	DF main PWB YC12-5 to 8
6	DF main PWB (DFMPWB) : Replace	

Checking procedure at the occurrence of J63XX	Corrective action at the occurrence of J63XX	On/Off control signal output connector (terminal), point of checking connection
1	Items for Initial Checks	see page 1-4-29
2	DF middle sensor (DFMES):Conduct connectivity check, mounting location check, operation check (U241)	DF main PWB YC20-6
3	DF feedshift solenoid 3 (DFFSSOL): Check to see the feedshift guide 3 is switchable (U240)	DF main PWB YC18-12,13
4	DF paper entry motor (DFPEM) : Operation check (U240)	DF main PWB YC12-13 to 16
5	DF middle motor (DFMM) : Operation check (U240)	DF main PWB YC10-5 to 8
6	DF main PWB(DFMPWB) : Replace	

(12) Electrical parts that could cause paper jam at the DF process part

Timing of detection

Jam code
J6500,J651x,J6600,J6610

Corrective Action

Related parts	
DF middle motor (DFMM)	DF main PWB(DFMPWB)
DF drum motor (DFDRM)	
DF bundle eject sensor (DFBDS)	
DF drum sensor (DFDRS)	
DF feedshift solenoid 1 (DFDRSOL)	

Checking procedure at the occurrence of J65XX	Corrective action at the occurrence of J65XX	On/Off control signal output connector (terminal), point of checking connection
1	Items for Initial Checks	see page 1-4-29
2	DF middle sensor (DFMES):Conduct connectivity check, mounting location check, operation check (U241)	DF main PWB YC20-6
3	DF bundle eject sensor (DFBDS) : Conduct connectivity check, mounting location check, operation check (U241)	DF main PWB YC22-27
4	DF middle motor (DFMM) : Operation check (U240)	DF main PWB YC12-9 to 12
5	DF main PWB(DFMPWB) : Replace	

Checking procedure at the occurrence of J66XX	Corrective action at the occurrence of J66XX	On/Off control signal output connector (terminal), point of checking connection
1	Items for Initial Checks	see page 1-4-29
2	DF drum sensor (DFDRS) : Conduct connectivity check, mounting location check, operation check (U241)	DF main PWB YC20-3
3	DF feedshift solenoid 1 (DFDRSOL): Check to see the feedshift guide 1 is switchable (U240)	DF main PWB YC18-12,13

Checking procedure at the occurrence of J66XX	Corrective action at the occurrence of J66XX	On/Off control signal output connector (terminal), point of checking connection
4	DF drum motor (DFDRM) : Operation check (U240)	DF main PWB YC18-1 to 4
5	DF main PWB(DFMPWB) : Replace	

(13) Electrical parts that could cause paper jam at the DF eject tray part

Timing of detection

Jam code
J640x,J641x

Corrective Action

Related parts	
DF eject motor (DFEM)	DF main PWB(DFMPWB)
DF tray motor (DFTM)	
DF middle sensor (DFMES)	
DF tray upper sensor 1 and 2 (DFTUSS 1,2)	

Checking procedure at the occurrence of J64XX	Corrective action at the occurrence of J64XX	On/Off control signal output connector (terminal), point of checking connection
1	Items for Initial Checks	see page 1-4-29
2	DF middle sensor (DFMES):Conduct connectivity check, mounting location check, operation check (U241)	DF main PWB YC20-6
3	DF tray upper sensor 1 and 2 (DFTUSS1, 2) : Conduct connectivity check, mounting location check, operation check (U241)	DF main PWB YC21-19(DFTUSS1),YC13-3(DFTUSS2)
4	DF eject motor (DFEM): Operational check (U240)	DF main PWB YC12-5 to 8
5	DF tray motor (DFTM) : Operation check (U240)	DF main PWB YC19-4
6	DF main PWB(DFMPWB) : Replace	

(14) Electrical parts that could cause paper jam at the CF conveying part

Timing of detection

Jam code
J6710,J7700,J7710

Corrective Action

Related parts	
DF drum motor (DFDRM)	DF main PWB(DFMPWB)
CF paper entry motor (CFPEM)	CF PWB (CFPWB)
DF drum sensor (DFDRS)	
CF conveying sensor (CFPCS)	

Checking procedure at the occurrence of J671X	Corrective action at the occurrence of J671X	On/Off control signal output connector (terminal), point of checking connection
1	Items for Initial Checks	see page 1-4-29
2	DF drum sensor (DFDRS) : Conduct connectivity check, mounting location check, operation check (U241)	DF main PWB YC20-3
3	DF drum motor (DFDRM) : Operation check (U240)	DF main PWB YC18-1 to 4
4	CF paper entry motor (CFPEM): Check if the gears can chain the drive.	CF PWB YC18-1 to 4
5	DF main PWB(DFMPWB) : Replace	
6	CF PWB (CFPWB): Replace	

Checking procedure at the occurrence of J77X0	Corrective action at the occurrence of J77X0	On/Off control signal output connector (terminal), point of checking connection
1	Items for Initial Checks	see page 1-4-29
2	CF conveying sensor (CFPCS) : Conduct connectivity check, mounting location check, operation check (U241)	CF PWB YC20-15
3	CF paper entry motor (CFPEM): Check if the gears can chain the drive.	CF PWB YC18-1 to 4
4	DF main PWB(DFMPWB) : Replace	
5	CF PWB (CFPWB): Replace	

1-4-3 Self-diagnostic function

(1) Self-diagnostic function

1. This machine is equipped with self-diagnostic function. When a problem is detected, the machine stops printing and display the dialog to retrieve the relevant information in a log. (Self-diagnostic dialog)
   * : Be sure not to turn power off until the dialog has gone off.
   * : The logs retrieved can be downloaded in a flash memory device using U964 mode. (See page 1-3-234)

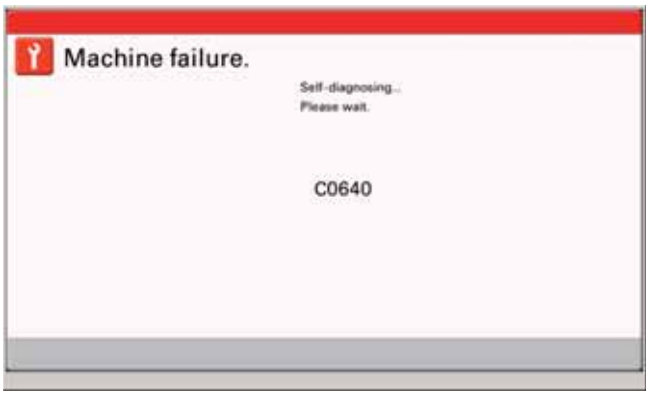

Figure 1-4-5

2. And then display an error message on the operation panel. An error message consists of a message prompting a contact to service personnel and a four-digit error code indicating the type of the error.

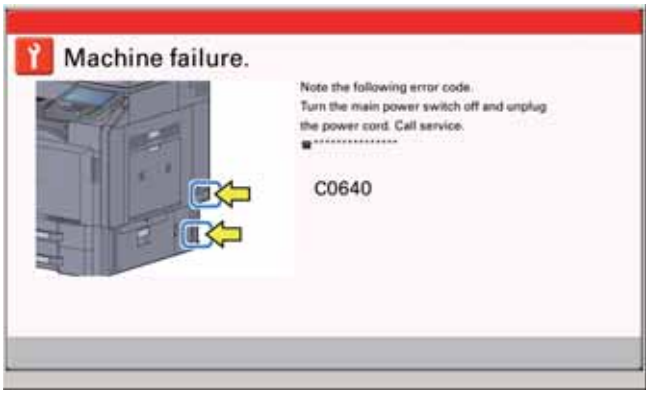

Figure 1-4-6

(2) Self diagnostic codes

If the part causing the problem was not supplied, use the unit including the part for replacement

Caution:

Before attempting to check the power supply, fuser unit, and the IH controller PWB, be sure to turn the power switch off and unplug the machine from power. Allow at least 5 seconds before starting to conduct service until the capacitors on the circuit boards have been completely discharged.

To reset a service call regarding the Maintenance T display and the DP, performing U906 Disconnection at Defect is required. (See page 1-3-223)

.

Code	Contents	Related parts	Check procedures/ corrective measures
0030	**FAX control PWB system error** Processing with the fax software was disabled due to a software problem.	FAX control PWB	1. Turn the main power swtch off and after 5 seconds, re-mount the FAX controller PWB, then turn power on. 2. Reinstall the fax software. 3. Replace the FAX control PWB.
0070	**FAX control PWB incompatible detection error** Abnormal detection of FAX control PWB incompatibility In the initial communication with the FAX control PWB, any normal communication command is not transmitted.	FAX control PWB (The FAX PWB installed will not be the one designed for the machine.)	1. Install the FAX system designed for the model. 2. Reinstall the fax software.
0080	**Option printing system device error.** The version of the FPGA for Fiery control is not readable. (Defective FPGA)	Defective FPGA for printing system control.	1. Turn the main power swtch off and after 5 seconds, then turn power on. 2. Replace the main PWB (see page 1-5-72).
0100	**Backup memory device error**	EEPROM(main PWB)	1. Turn the main power swtch off and after 5 seconds, then turn power on. 2. Check that the EEPROM on the main circuit PWB is peroperly installed on the main circuit PWB and, if not, re-install it. 3. Replace the main PWB (see page 1-5-72).
0120	**MAC address data error** For data in which the MAC address is invalid.	EEPROM(main PWB)	1. Turn the main power swtch off and after 5 seconds, then turn power on. 2. Check the MAC address on the network status page. 3. If it is blank, obtain an EEPROM with its MAC address written from the service support and install. 4. Replace the main PWB (see page 1-5-72).

Code	Contents	Related parts	Check procedures/ corrective measures
0150	**Backup memory read/write error (engine PWB)** No response is issued from the device in reading/writing for 5 ms or more and this problem is repeated 5 times successively. Mismatch of reading data from 2 locations occurs 8 times successively. Mismatch between writing data and reading data occurs 8 times successively.	EEPROM(Engine PWB)	1. Turn the main power swtch off and after 5 seconds, then turn power on. 2. Check that the EEPROM is peroperly installed on the engine PWB and re-install it. 3. Replace the engine PWB (see page 1-5-80). 4. Check the EEPROM and if the data are currupted, contact the service support.
0160	**Backup memory data error (engine PWB)** Reading data from EEPROM is abnormal.	EEPROM	1. Turn the main power swtch off and after 5 seconds, then turn power on. 2. Execute U021 - memory initializing.(see page 1-3-31) 3. If the EEPROM data are currupted, contact the service support.
0170	**Billing counting error** The values on the main circuit PWB and on the engine do not match for any of charging counter, life counter, and scanner counter.	EEPROM	1. Check that the EEPROMs installed in the main PWB and the engine PWB are correct and, if not, use the correct EEPROM for the model. 2. If the EEPROM data are currupted, contact the service support.
		Main PWB	Replace the main PWB (see page 1-5-72).
		Engine PWB	Replace the engine PWB (see page 1-5-80).
0180	**Machine number mismatch** Machine number of main and engine does not match.	Data damage of EEPROM.	1. Confirm the machine data for the main and engine units by using U004 (see page 1-3-27). 2. If the serial number data of different models is alternately displayed, install the correct EEPROM in the PWB of the wrong serial number data. 3. Contact the Service Support.
0350	**Panel PWB communication error (electronic volume I2C communication error)** NACK is received during I2C communication -> retried 5 times -> rebooting command sent -> retried 5 times If NACK is still received.	Operation PWB	1. Turn the main power swtch off and after 5 seconds, then turn power on. 2. Confirm that the wiring connector is firmly connected and, if necessary, connect the connector all the way in. Operation PWB (YC10) and Main PWB (YC6) 3. If the wiring is disconnected, shorted or grounded, replace the wiring.
		Main PWB	Replace the main PWB (see page 1-5-72).

Code	Contents	Related parts	Check procedures/ corrective measures
0620	**FAX image DIMM error** 1. The Fax image DIMM has not been installed. 2. Fax image DIMM access error.	FAX image DIMM	1. Install the FAX image DIMM supplied in the FAX system onto the main PWB. 2. Firmly install the FAX image DIMM again onto the main board. 3. Check the FAX image DIMM terminals and remove any foreign objects that may be adhered to it. 4. Replace with a new FAX image DIMM.
		Main PWB.	Replace the main PWB (see page 1-5-72).
0630	**DMA error** DMA transmission of image data does not complete within the specified period of time.	DP CIS	1. Reconnect the CIS signal line. 2. Confirm that the CIS connector terminals are firmly connected. Insert the connector all the way in. 3. If the wiring is disconnected, shorted or grounded, replace the wiring.
		DP main PWB Main PWB	1. Confirm that the wiring connector is firmly connected and, if necessary, connect the connector all the way in. 2. If the wiring is disconnected, shorted or grounded, replace the wiring. Wiring that connects the CIS and the DP controller PWB. Wiring that connects the DP main PWB and the main PWB. 3. Replace the DP main PWB. 4. Replace the main PWB (see page 1-5-72).

Code	Contents	Related parts	Check procedures/ corrective measures
0640	**Hard disk error** The hard disk cannot be accessed.	HDD	1. If an abnormal noise is heard from the HDD, replace the HDD. 2. Check the SATA wiring between the HDD and the main circuit PWB for loose connection, disconnection and damages, and that it is connected into the correct terminal. Main PWB: YC1,YC27 YC2,YC32 (45/55 ppm model) 3. Replace the SATA cable. 4. Execute U024 to initialize (FULL) the HDD (see page 1-3-32). 5. If an error is detected after executing U024, replace the HDD.
		HDD number difference (45/ 55 ppm model only)	1. Confirm whether the HDD number is correct in U024_Composition and change it if different (see page 1-3-32). HDD 1piece: Single HDD 2pieces: Multi
		Lack of HDD capacity (45/ 55 ppm model only)	1. Confirm the total capacity of the HDD if it is more than 320GB. Change the HDD or add it in case of lacking in capacity.
		Main PWB	Replace the main PWB (see page 1-5-72).
0650	**FAX image DIMM check error** A fax image DIMM which was used with another machine is installed.	FAX DIMM.	1. Confirm that a used FAX image DIMM was used instead of the FAX image DIMM contained in the FAX system. 2. If a DIMM that was used with other unit has been installed, execute maintenance mode U671 - Recovery FAX DIMM. 3. Check whether the Fax DIMM is properly inserted into the socket on the main PWB. 4. Replace with a new FAX image DIMM.
		Main PWB	Replace the main PWB (see page 1-5-72).

Code	Contents	Related parts	Check procedures/ corrective measures
0660	**Hard disk encryption key error**	EEPROM	1. Execute U004 if this occurs after the EEPROM has been changed.
		HDD	1. If an abnormal noise is heard from the HDD, replace the HDD. 2. Check the SATA wiring between the HDD and the main circuit PWB for loose connection, disconnection and damages, and that it is connected into the correct terminal. Main PWB: YC1,YC27 YC2,YC32 (45/55 ppm model) 3. Replace the SATA cable. 4. Execute U024 to initialize (FULL) the HDD (see page 1-3-32). 5. If an error is detected after executing U024, replace the HDD.
		Main PWB	Replace the main PWB (see page 1-5-72).
0670	**Hard disk overwriting erasure error**	HDD	1. If an abnormal noise is heard from the HDD, replace the HDD. 2. Check the SATA wiring between the HDD and the main circuit PWB for loose connection, disconnection and damages, and that it is connected into the correct terminal. Main PWB: YC1,YC27 YC2,YC32 (45/55 ppm model) 3. Replace the SATA cable. 4. Execute U024 to initialize (FULL) the HDD (see page 1-3-32). 5. If an error is detected after executing U024, replace the HDD.
		Main PWB	Replace the main PWB (see page 1-5-72).
0800	**Image processing error** JAM010X is detected twice.	Main PWB	Replace the main PWB (see page 1-5-72).
0830	**FAX control PWB flash program area checksum error** A checksum error occurred with the program of the FAX control PWB.	FAX software	1. Reinstall the fax software.
		FAX control PWB	1. Execute initializing by U600.(Refer to the FAX service manual) 2. Replace the FAX control PWB.

Code	Contents	Related parts	Check procedures/ corrective measures
0840	**Faults of RTC** (“Time for maintenance T” is displayed) [Check at power up] The RTC setting has reverted to a previous state. The machine has not been powered for 5 years (compared to the settings stored periodically in the EEPROM). The RTC setting is older than 00:01 on January 1, 2000. [Checked periodically (in 5-minute interval) after powered up] The RTC setting has reverted to a state older than the last time it was checked. 10 minutes have been passed since the previous check. After C840 is detected, the machine enters in disconnection mode after the main power switch has been switched on and off and indicates ‘Maintenance T.’	Battery (main PWB)	1. Make sure that the back-up batteries on the main PWB are not short-circuited. 2. Reset Maintenance T by executing U906 (see page 1-3-223). 3. If the same C call is displayed when power is switched on and off, replace the back up battery. 4. If communication error (due to a noise, etc.) is present with the RTC on the main circuit PWB, check the PWB is properly grounded.
		Main PWB	Replace the main PWB (see page 1-5-72).
0870	**PCFAX control PWB to main PWB high capacity data transfer error** High-capacity data transfer between the FAX control PWB and the main PWB of the machine was not normally performed even if the data transfer was retried the specified times.	FAX control PWB	1. Turn the main power swtch off and after 5 seconds, re-mount the FAX controller PWB, then turn power on. 2. Replace the FAX control PWB.
		HDD	Execute U024 to initialize the HDD (see page 1-3-32).
		Main PWB	Replace the main PWB (see page 1-5-72).
0920	**Fax file system error** The backup data is not retained for file system abnormality of flash memory of the FAX control PWB.	FAX control PWB	1. Execute initializing by U600 (Refer to the FAX service manual). 2. Replace the FAX control PWB.
0980	**24 V power down detect** If a 24V power disconnection signal is observed and a 12V power disconnection signal is observed simultaneously for one second.	Power source PWB	1. Check the +24V output is given at YC12-1 to 3 of the power circuit PWB. 2. Replace the power source PWB (see page 1-5-85)

Code	Contents	Related parts	Check procedures/ corrective measures
1000	**MP lift motor error** If the MP lift sensor 1 (upper limit detect) or 2 (bottom detect) is not detectable to be turned on while the MP lift motor is ascending or descending.	Manual feed lift base elevating mechanism	1. Check that the paper lift base of the manual feed tray can smoothly ascend and descent, if not, repair or replace. 2. Check that the lift lever is located so that it can ascend or descend by the lift motor cam and that it not damaged and, if necessary, re-install or replace the manual feed table.
		MP lift motor	1. Check that the paper elevator has been ascended. 2. Check the drive gear can rotate or they are not unusually loaded and, if necessary, replace. 3. Confirm that the wiring connector is firmly connected and, if necessary, connect the connector all the way in. MP lift motor and Relay PWB (YC3) Relay PWB (YC12) and Feed PWB1 (YC17) Feed PWB1 (YC1) and Engine PWB (YC6) 4. If the wiring is disconnected, shorted or grounded, replace the wiring. 5. Replace the MP lift motor.
		MP lift sensor1 MP lift sensor2	1. Check that the sensor is correctly positioned. 2. Confirm that the wiring connector is firmly connected and, if necessary, connect the connector all the way in. MP lift sensor1,2 and Relay PWB (YC3) Relay PWB (YC12) and Feed PWB1(YC17) Feed PWB1 (YC1) and Engine PWB (YC6) 3. If the wiring is disconnected, shorted or grounded, replace the wiring. 4. Replace the MP lift sensor1 or MP lift sensor2.
		Feed PWB 2	Replace the Feed PWB 2.
		Engine PWB	1. Check the engine software and upgrade to the latest, if necessary. 2. Replace the engine PWB (see page 1-5-80).

Code	Contents	Related parts	Check procedures/ corrective measures
1010	**Lift motor 1 error** After cassette 1 is inserted, lift sensor 1 does not turn on within 12 s. This error is detected 5 times successively. The lock signal of the motor is detected continuously for 1 s. This error is detected 5 times successively.	Cassette lift base elevating mechanism	Check that the cassette base can be manipulated smoothly, if not, repair or replace.
		Lift motor 1	1. Check that the cassette base has been ascended. 2. Check the drive gear can rotate or they are not unusually loaded and, if necessary, replace. 3. Confirm that the wiring connector is firmly connected and, if necessary, connect the connector all the way in. Lift motor 1 and Feed PWB 2 (YC3) Feed PWB 2 (YC1) and Engine PWB (YC4) 4. If the wiring is disconnected, shorted or grounded, replace the wiring. 5. Replace the lift motor 1.
		Lift sensor 1	1. Check that the sensor is correctly positioned. 2. Confirm that the wiring connector is firmly connected and, if necessary, connect the connector all the way in. Lift sensor 1 and Feed PWB 2 (YC8) Feed PWB 2 (YC1) and Engine PWB (YC4) 3. If the wiring is disconnected, shorted or grounded, replace the wiring. 4. Replace the lift sensor1.
		Feed PWB 2	Replace the Feed PWB 2.
		Engine PWB	1. Check the engine software and upgrade to the latest, if necessary. 2. Replace the engine PWB (see page 1-5-80).

Code	Contents	Related parts	Check procedures/ corrective measures
1020	**Lift motor 2 error** After cassette 2 is inserted, lift sensor 2 does not turn on within 12 s. This error is detected 5 times successively. The lock signal of the motor is detected continuously for 1 s. This error is detected 5 times successively.	Cassette lift base elevating mechanism	Check that the cassette base can be manipulated smoothly, if not, repair or replace.
		Lift motor 2	1. Check that the cassette base has been ascended. 2. Check the drive gear can rotate or they are not unusually loaded and, if necessary, replace. 3. Confirm that the wiring connector is firmly connected and, if necessary, connect the connector all the way in. Lift motor 2 and Feed PWB 2 (YC3) Feed PWB 2 (YC1) and Engine PWB (YC4) 4. If the wiring is disconnected, shorted or grounded, replace the wiring. 5. Replace the lift motor 2.
		Lift sensor 2	1. Check that the sensor is correctly positioned. 2. Confirm that the wiring connector is firmly connected and, if necessary, connect the connector all the way in. Lift sensor 2 and Feed PWB 2 (YC8) Feed PWB 2 (YC1) and Engine PWB (YC4) 3. If the wiring is disconnected, shorted or grounded, replace the wiring. 4. Replace the lift sensor2.
		Feed PWB 2	Replace the Feed PWB 2.
		Engine PWB	1. Check the engine software and upgrade to the latest, if necessary. 2. Replace the engine PWB (see page 1-5-80).

Code	Contents	Related parts	Check procedures/ corrective measures
1030	**PF lift motor 1 error (paper feeder)** After cassette 3 is inserted, PF lift sensor 1 does not turn on within 12 s. This error is detected 5 times successively. During driving the motor, the lift overcurrent protective monitor signal is detected for 1 s or more 5 times succes-sively. However, the first 1 s after motor is turned on is excluded from detection.	Cassette lift base elevating mechanism	Check that the cassette base can be manipulated smoothly, if not, repair or replace.
		PF Lift motor 1	1. Check that the cassette base has been ascended. 2. Check the drive gear can rotate or they are not unusually loaded and, if necessary, replace. 3. Confirm that the wiring connector is firmly connected and, if necessary, connect the connector all the way in. PF Lift motor 1 and main PWB (YC7) 4. If the wiring is disconnected, shorted or grounded, replace the wiring. 5. PFReplace the lift motor 1.
		PF Lift sensor 1	1. Check that the sensor is correctly positioned. 2. Confirm that the wiring connector is firmly connected and, if necessary, connect the connector all the way in. PF Lift sensor 1 and PF main PWB (YC7) 3. If the wiring is disconnected, shorted or grounded, replace the wiring. 4. Replace the lift sensor 1.
		PF main PWB	Replace the PF main PWB (Refer to the service manual for the paper feeder).

Code	Contents	Related parts	Check procedures/ corrective measures
1040	**PF lift motor 2 error (paper feeder)** After cassette 4 is inserted, PF lift sensor 2 does not turn on within 12 s. This error is detected 5 times successively. During driving the motor, the lift overcurrent protective monitor signal is detected for 1 s or more 5 times succes-sively. However, the first 1 s after motor is turned on is excluded from detection.	Cassette lift base elevating mechanism	Check that the cassette base can be manipulated smoothly, if not, repair or replace.
		PF Lift motor 2	1. Check that the cassette base has been ascended. 2. Check the drive gear can rotate or they are not unusually loaded and, if necessary, replace. 3. Confirm that the wiring connector is firmly connected and, if necessary, connect the connector all the way in. PF Lift motor 2 and PF main PWB (YC7) 4. If the wiring is disconnected, shorted or grounded, replace the wiring. 5. Replace the PF Lift motor2.
		PF Lift sensor 2	1. Check that the sensor is correctly positioned. 2. Confirm that the wiring connector is firmly connected and, if necessary, connect the connector all the way in. PF Lift sensor 2 and PF main PWB (YC7) 3. If the wiring is disconnected, shorted or grounded, replace the wiring. 4. Replace the PF Lift sensor 2.
		PF main PWB	Replace the PF main PWB (Refer to the service manual for the paper feeder).

Code	Contents	Related parts	Check procedures/ corrective measures
1050	**SM lift motor error (side multi tray)** [45 ppm/55 ppm model] After cassette 5 is inserted, SM lift sensor does not turn on within 12 s. This error is detected 5 times successively. (Time to detect is 2 seconds at the second time and later.) During driving the motor, the lift overcurrent protective monitor signal is detected for 1 s or more 5 times successively. However, the first 1 s after motor is turned on is excluded from detection.	Cassette lift base elevating mechanism	Check that the cassette base can be manipulated smoothly, if not, repair or replace.
		SM Lift motor	1. Check that the cassette base has been ascended. 2. Check the drive gear can rotate or they are not unusually loaded and, if necessary, replace. 3. Confirm that the wiring connector is firmly connected and, if necessary, connect the connector all the way in. SM Lift motor and SM main PWB (YC5) 4. If the wiring is disconnected, shorted or grounded, replace the wiring. 5. Replace the SM Lift motor.
		SM Lift sensor	1. Check that the sensor is correctly positioned. 2. Confirm that the wiring connector is firmly connected and, if necessary, connect the connector all the way in. SM Lift sensor and SM main PWB (YC7) 3. If the wiring is disconnected, shorted or grounded, replace the wiring. 4. Replace the SM Lift sensor.
		SM main PWB	Replace the SM main PWB (Refer to the service manual for the paper feeder).

Code	Contents	Related parts	Check procedures/ corrective measures
1060	**PF lift motor 1 error (side paper feeder)** [45 ppm/55 ppm model] After cassette 6 is inserted, PF lift sensor 1 does not turn on within 12 s. This error is detected 5 times successively. (Time to detect is 2 seconds at the second time and later.) During driving the motor, the lift overcurrent protective monitor signal is detected for 1 s or more 5 times successively. However, the first 1 s after motor is turned on is excluded from detection. *:The lift over-current protection monitor signal has been detected for 200ms or longer where LFC is installed.	Cassette lift base elevating mechanism	Check that the cassette base can be manipulated smoothly, if not, repair or replace.
		PF Lift motor 1	1. Check that the cassette base has been ascended. 2. Check the drive gear can rotate or they are not unusually loaded and, if necessary, replace. 3. Confirm that the wiring connector is firmly connected and, if necessary, connect the connector all the way in. PF Lift motor 1 and PF main PWB (YC7) 4. If the wiring is disconnected, shorted or grounded, replace the wiring. 5. Replace the lift motor 1.
		PF Lift sensor 1	1. Check that the sensor is correctly positioned. 2. Confirm that the wiring connector is firmly connected and, if necessary, connect the connector all the way in. PF Lift sensor1 and PF main PWB (YC5) 3. If the wiring is disconnected, shorted or grounded, replace the wiring. 4. Replace the lift sensor 1.
		PF main PWB	Replace the PF main PWB (Refer to the service manual for the paper feeder).

Code	Contents	Related parts	Check procedures/ corrective measures
1070	**PF lift motor 2 error (side paper feeder)** [45 ppm/55 ppm model] After cassette 7 is inserted, PF lift sensor 2 does not turn on within 12 s. This error is detected 5 times successively. (Time to detect is 2 seconds at the second time and later.) During driving the motor, the lift overcurrent protective monitor signal is detected for 1 s or more 5 times successively. However, the first 1 s after motor is turned on is excluded from detection. *:The lift over-current protection monitor signal has been detected for 200ms or longer where LFC is installed.	Cassette lift base elevating mechanism	Check that the cassette base can be manipulated smoothly, if not, repair or replace.
		PF Lift motor2	1. Check that the cassette base has been ascended. 2. Check the drive gear can rotate or they are not unusually loaded and, if necessary, replace. 3. Confirm that the wiring connector is firmly connected and, if necessary, connect the connector all the way in. PF Lift motor 2 and PF main PWB (YC7) 4. If the wiring is disconnected, shorted or grounded, replace the wiring. 5. Replace the PF Lift motor2.
		PF Lift sensor2	1. Check that the sensor is correctly positioned. 2. Confirm that the wiring connector is firmly connected and, if necessary, connect the connector all the way in. PF Lift sensor 2 and PF main PWB (YC4) 3. If the wiring is disconnected, shorted or grounded, replace the wiring. 4. PFReplace the lift sensor2.
		PF main PWB	Replace the PF main PWB (Refer to the service manual for the paper feeder).

Code	Contents	Related parts	Check procedures/ corrective measures
1100	**PF lift motor 1 error (large capacity feeder)** After cassette 3 is inserted, PF lift sensor 1 does not turn on within 23 s. This error is detected 5 times successively. (Time to detect is 2 seconds at the second time and later.) During driving the motor, the lift overcurrent protective monitor signal is detected for 200 ms or more 5 times successively. However, the first 1 s after PF lift motor 1 is turned on is excluded from detection.	Paper feeder lift base elevating mechanism	Check that the cassette base can be manipulated smoothly, if not, repair or replace.
		PF Lift motor1	1. Check that the cassette base has been ascended. 2. Check the drive gear can rotate or they are not unusually loaded and, if necessary, replace. 3. Confirm that the wiring connector is firmly connected and, if necessary, connect the connector all the way in. PF Lift motor 1 and PF main PWB (YC7) 4. If the wiring is disconnected, shorted or grounded, replace the wiring. 5. Replace the PF lift motor1.
		PF Lift sensor1	1. Check that the sensor is correctly positioned. 2. Confirm that the wiring connector is firmly connected and, if necessary, connect the connector all the way in. PF Lift sensor 1 and PF main PWB (YC5) 3. If the wiring is disconnected, shorted or grounded, replace the wiring. 4. Replace the PF lift sensor1.
		PF main PWB	Replace the PF main PWB (Refer to the service manual for the paper feeder).

Code	Contents	Related parts	Check procedures/ corrective measures
1110	**PF lift motor 2 error (large capacity feeder)** After cassette 4 is inserted, PF lift sensor 2 does not turn on within 23 s. This error is detected 5 times successively. (Time to detect is 2 seconds at the second time and later.) During driving the motor, the lift overcurrent protective monitor signal is detected for 200 ms or more 5 times successively. However, the first 1 s after PF lift motor 2 is turned on is excluded from detection.	Paper feeder lift base elevating mechanism	Check that the cassette base can be manipulated smoothly, if not, repair or replace.
		PF Lift motor 2	1. Check that the cassette base has been ascended. 2. Check the drive gear can rotate or they are not unusually loaded and, if necessary, replace. 3. Confirm that the wiring connector is firmly connected and, if necessary, connect the connector all the way in. PF Lift motor 2 and PF main PWB (YC7) 4. If the wiring is disconnected, shorted or grounded, replace the wiring. 5. Replace the PF Lift motor2.
		PF Lift sensor2	1. Check that the sensor is correctly positioned. 2. Confirm that the wiring connector is firmly connected and, if necessary, connect the connector all the way in. PF Lift sensor 2 and PF main PWB (YC4) 3. If the wiring is disconnected, shorted or grounded, replace the wiring. 4. Replace the PF Lift sensor 2.
		PF main PWB	Replace the PF main PWB (Refer to the service manual for the paper feeder).

Code	Contents	Related parts	Check procedures/ corrective measures
1140	**SD lift motor error (side deck)** After cassette 5 is inserted, SD lift sensor does not turn on within 30 s. The lock signal of the motor is detected continuously for 200 ms.	Paper feeder lift base elevating mechanism	Check that the cassette base can be manipulated smoothly, if not, repair or replace.
		SD Lift motor	1. Check that the cassette base has been ascended. 2. Check the drive gear can rotate or they are not unusually loaded and, if necessary, replace. 3. Confirm that the wiring connector is firmly connected and, if necessary, connect the connector all the way in. SD Lift motor and SD main PWB (YC8) 4. If the wiring is disconnected, shorted or grounded, replace the wiring. 5. Replace the SD Lift motor.
		SD Lift sensor	1. Check that the sensor is correctly positioned. 2. Confirm that the wiring connector is firmly connected and, if necessary, connect the connector all the way in. SD Lift sensor and SD main PWB (YC5) 3. If the wiring is disconnected, shorted or grounded, replace the wiring. 4. Replace the SD Lift sensor.
		SD main PWB	Replace the SD main PWB (Refer to the service manual for the paper feeder).
1250	**SM multi feed sensor communication error (side multi tray)** [45 ppm/55 ppm model] A communication error is detected 3 times in succession.	Side multi tray	Check the wiring connection status with the main unit and, if necessary, try connecting it again.
		SM main PWB	1. Confirm that the wiring connector is firmly connected and, if necessary, connect the connector all the way in. SM main PWB (YC1) and Engine PWB (YC19) 2. If the wiring is disconnected, shorted or grounded, replace the wiring. 3. Replace the SM main PWB (Refer to the service manual for the paper feeder).
		Engine PWB	1. Check the engine software and upgrade to the latest, if necessary. 2. Replace the engine PWB (see page 1-5-80).

Code	Contents	Related parts	Check procedures/ corrective measures
1350	**SM multi feed sensor error (side multi tray)** [45 ppm/55 ppm model] The SM multi feed sensor has detected multi feeding 5 times successively.	SM multi feed sensor	1. Check that the sensor is correctly positioned. 2. Confirm that the wiring connector is firmly connected and, if necessary, connect the connector all the way in. SM multi feed sensor and SM main PWB (YC11) 3. If the wiring is disconnected, shorted or grounded, replace the wiring. 4. Replace the SM multi feed sensor.
		SM main PWB	Replace the PF main PWB (Refer to the service manual for the paper feeder).
1400	**Rotary guide motor error** The guide sensor is not detected to be on at the home position detection with the rotary guide for three times in a row.	Rotary guide motor	1. Check the rotary guide and drive gear can rotate or they are not unusually loaded and, if necessary, replace. 2. Confirm that the wiring connector is firmly connected and, if necessary, connect the connector all the way in. Rotary guide motor and BR PWB (YC5) 3. If the wiring is disconnected, shorted or grounded, replace the wiring. 4. Replace the rotary guide motor.
		BR PWB	Replace the BR PWB.
1410	**Rotary de-curler error** If the de-curler won't turn On/Off despite it has been activated for 400 steps during waiting for the de-curler sensor to be On/Off three times in a row.	Rotary de-curler motor	1. Check the rotary de-curler and drive gear can rotate or they are not unusually loaded and, if necessary, replace. 2. Confirm that the wiring connector is firmly connected and, if necessary, connect the connector all the way in. Rotary de-curler motor and BR PWB (YC5) 3. If the wiring is disconnected, shorted or grounded, replace the wiring. 4. Replace the rotary de-curler motor.
		BR PWB	Replace the BR PWB.
1450	**SM multi feed sensor backup error (side multi tray)** [45 ppm/55 ppm model] When writing the data, read and write data does not match 3 times in succession. Deleting a block has failed three times in a row. Writing won't complete in 200 ms after writing has commenced.	SM multi feed sensor	1. Confirm that the wiring connector is firmly connected and, if necessary, connect the connector all the way in. SM multi feed sensor and SM main PWB (YC11) 2. If the wiring is disconnected, shorted or grounded, replace the wiring. 3. Replace the SM multi feed sensor.
		SM main PWB	Replace the PF main PWB (Refer to the service manual for the paper feeder).

Code	Contents	Related parts	Check procedures/ corrective measures
1710	**Side multi tray incompatible detection error** [30 ppm/35 ppm model] The side multi tray has been installed with a device to which it is incompatible.	The side multi tray is installed with a device to which it is incompatible.	Install the side multi-tray with the target model.
1800	**Paper feeder communication error** A communication error from paper feeder is detected 10 times in succession.	Paper feeder	Check the wiring connection status with the main unit and, if necessary, try connecting it again.
		PF main PWB	1. Confirm that the wiring connector is firmly connected and, if necessary, connect the connector all the way in. PF main PWB (YC13) and Engine PWB (YC19) 2. If the wiring is disconnected, shorted or grounded, replace the wiring. 3. Replace the PF main PWB (Refer to the service manual for the paper feeder).
		Engine PWB	1. Check the engine software and upgrade to the latest, if necessary. 2. Replace the engine PWB (see page 1-5-80).
1810	**Side multi tray communication error** [45 ppm/55 ppm model] A communication error from side multi tray is detected 10 times in succession.	Side multi tray	Check the wiring connection status with the main unit and, if necessary, try connecting it again.
		SM main PWB	1. Confirm that the wiring connector is firmly connected and, if necessary, connect the connector all the way in. SM main PWB (YC1) and Engine PWB (YC19) 2. If the wiring is disconnected, shorted or grounded, replace the wiring. 3. Replace the SM main PWB (Refer to the service manual for the paper feeder).
		Engine PWB	Check the engine software and upgrade to the latest, if necessary. Replace the engine PWB (see page 1-5-80).
		SM main PWB	Replace the SM main PWB (Refer to the service manual for the paper feeder).

Code	Contents	Related parts	Check procedures/ corrective measures
1820	**Side paper feeder communication error** [45 ppm/55 ppm model] A communication error from paper feeder is detected 10 times in succession.	Side paper feeder	Check the wiring connection status with the main unit and, if necessary, try connecting it again.
		SM main PWB	1. Confirm that the wiring connector is firmly connected and, if necessary, connect the connector all the way in. SM main PWB (YC1) and Engine PWB (YC19) 2. If the wiring is disconnected, shorted or grounded, replace the wiring. 3. Replace the SM main PWB (Refer to the service manual for the paper feeder).
		PF main PWB	1. Confirm that the wiring connector is firmly connected and, if necessary, connect the connector all the way in. PF main PWB (YC13) and SM main PWB (YC4) 2. If the wiring is disconnected, shorted or grounded, replace the wiring. 3. Replace the PF main PWB (Refer to the service manual for the paper feeder).
		Engine PWB	1. Check the engine software and upgrade to the latest, if necessary. 2. Replace the engine PWB (see page 1-5-80).
1900	**Paper feeder EEPROM error** When writing the data, read and write data does not match 3 times in succession.	PF main PWB (EEPROM)	1. Confirm that the wiring connector is firmly connected and, if necessary, connect the connector all the way in. 2. Replace the PF main PWB (Refer to the service manual for the paper feeder).
1910	**Side multi tray EEPROM error** [45 ppm/55 ppm model] When writing the data, read and write data does not match 3 times in succession.	SM main PWB (EEPROM)	1. Confirm that the wiring connector is firmly connected and, if necessary, connect the connector all the way in. 2. Replace the SM main PWB (Refer to the service manual for the paper feeder).
1920	**Side paper feeder EEPROM error** [45 ppm/55 ppm model] When writing the data, read and write data does not match 3 times in succession.	PF main PWB	1. Confirm that the wiring connector is firmly connected and, if necessary, connect the connector all the way in. 2. Replace the PF main PWB (Refer to the service manual for the paper feeder).

Code	Contents	Related parts	Check procedures/ corrective measures
1950	**Intermediate transfer belt unit EEPROM error** No response is issued from the device in reading/writing for 5 ms or more and this problem is repeated 5 times successively. Mismatch of reading data from 2 locations occurs 8 times successively. Mismatch between writing data and reading data occurs 8 times successively.	Transfer belt sensor	1. Confirm that the wiring connector is firmly connected and, if necessary, connect the connector all the way in. Engine PWB (YC27) and RFID PWB (4P connector) (Check wirings on the RFID side since the signal line for the intermediate transfer belt sensor EEPROM on the engine PWB and the signal line for the toner container RFID are the same.) Intermediate transfer belt unit and Engine PWB (YC3) 2. If the wiring is disconnected, shorted or grounded, replace the wiring. 3. Replace the Intermediate transfer belt unit (see page 1-5-62).
2101	**Developer motor K error** After developer motor K is driven, the ready signal does not turn to L within 5 s. After developer motor K is stabilized, the ready signal is at the H level for 5 s continuously.	Developer unit K	1. Check that the developer waste lock has been released and, if not, release the lock (see page 1-2-15). 2. Check that the gears and spiral screw of the developer unit are not damaged. 3. Confirm that the developer roller can rotate. 4. If it won't rotate, replace the developer unit (see page 1-5-57).
		Developer motor K	1. To check the motor operation, execute DLP(K) by U030 (see page 1-3-34). 2. Check the drive gear can rotate or they are not unusually loaded and, if necessary, replace. 3. Confirm that the wiring connector is firmly connected and, if necessary, connect the connector all the way in. Developer motor K and Motor control PWB (YC7) Motor control PWB (YC3) and Engine PWB (YC9) 4. If the wiring is disconnected, shorted or grounded, replace the wiring. 5. Replace the Developer motor K.
		Motor control PWB	Replace the Motor control PWB
		Engine PWB.	1. Check the engine software and upgrade to the latest, if necessary. 2. Replace the engine PWB (see page 1-5-80).

Code	Contents	Related parts	Check procedures/ corrective measures
2103	**Developer motor MCY error** After developer motor MCY is driven, the ready signal does not turn to L within 5 s. After developer motor MCY is stabilized, the ready signal is at the H level for 5 s continuously.	Developer unit MCY	1. Check that the developer waste lock has been released and, if not, release the lock (see page 1-2-15). 2. Check that the gears and spiral screw of the developer unit are not damaged. 3. Confirm that the developer roller can rotate. 4. If it won't rotate, replace the developer unit (see page 1-5-57).
		Developer motor MCY	1. To check the motor operation, execute DLP(MCY) by U030 (see page 1-3-34). 2. Check the drive gear can rotate or they are not unusually loaded and, if necessary, replace. 3. Confirm that the wiring connector is firmly connected and, if necessary, connect the connector all the way in. Developer motor MCY and Motor control PWB (YC7) Motor control PWB (YC3) and Engine PWB (YC9) 4. If the wiring is disconnected, shorted or grounded, replace the wiring. 5. Replace the Developer motor MCY.
		Motor control PWB	Replace the Motor control PWB
		Engine PWB.	1. Check the engine software and upgrade to the latest, if necessary. 2. Replace the engine PWB (see page 1-5-80).

Code	Contents	Related parts	Check procedures/ corrective measures
2201	**Drum motor K steady-state error** After drum motor K is stabilized, the ready signal is at the H level for 5 s continuously.	Drum unit	1. Execute U030 Belt Meand (transfer Motor) and check that the drum motor can rotate (see page 1-3-34). 2. Confirm that the drum or the drum screw can rotate. 3. If it won't rotate, replace the drum unit. (see page 1-5-57)
		Drum motor K	1. To check the motor operation, execute U030 Belt Meand (transfer motor) (see page 1-3-34). 2. Check the drive gear can rotate or they are not unusually loaded and, if necessary, replace. 3. Confirm that the wiring connector is firmly connected and, if necessary, connect the connector all the way in. Drum motor K and Motor control PWB (YC5) Motor control PWB (YC3) and Engine PWB (YC9) 4. If the wiring is disconnected, shorted or grounded, replace the wiring. 5. Replace the drum motor K (see page 1-5-101).
		Motor control PWB	Replace the Motor control PWB
		Engine PWB	1. Check the engine software and upgrade to the latest, if necessary. 2. Replace the engine PWB (see page 1-5-80).

Code	Contents	Related parts	Check procedures/ corrective measures
2202	**Drum motor C steady-state error** [45 ppm/55 ppm model] After drum motor C is stabilized, the ready signal is at the H level for 5 s continuously.	Drum unit	1. Execute U030 Belt Meand (transfer Motor) and check that the drum motor can rotate (see page 1-3-34). 2. Confirm that the drum or the drum screw can rotate. 3. If it won't rotate, replace the drum unit. (see page 1-5-57)
		Drum motor C	1. To check the motor operation, execute U030 Belt Meand (transfer motor) (see page 1-3-34). 2. Check the drive gear can rotate or they are not unusually loaded and, if necessary, replace. 3. Confirm that the wiring connector is firmly connected and, if necessary, connect the connector all the way in. Drum motor C and Motor control PWB (YC4) Motor control PWB (YC3) and Engine PWB (YC9) 4. If the wiring is disconnected, shorted or grounded, replace the wiring. 5. Replace the Drum motor C (see page 1-5-101).
		Motor control PWB	Replace the Motor control PWB
		Engine PWB	1. Check the engine software and upgrade to the latest, if necessary. 2. Replace the engine PWB (see page 1-5-80).

Code	Contents	Related parts	Check procedures/ corrective measures
2203	**Drum motor MCY steady-state error** [30 ppm/35 ppm model] After drum motor MCY is stabilized, the ready signal is at the H level for 5 s continuously.	Drum unit	1. Execute U030 Belt Meand (transfer Motor) and check that the drum motor can rotate (see page 1-3-34). 2. Confirm that the drum or the drum screw can rotate. 3. If it won't rotate, replace the drum unit (see page 1-5-57).
		Drum motor MCY	1. To check the motor operation, execute U030 Belt Meand (transfer motor) (see page 1-3-34). 2. Check the drive gear can rotate or they are not unusually loaded and, if necessary, replace. 3. Confirm that the wiring connector is firmly connected and, if necessary, connect the connector all the way in. Drum motor MCY and Motor control PWB (YC5) Motor control PWB (YC3) and Engine PWB (YC9) 4. If the wiring is disconnected, shorted or grounded, replace the wiring. 5. Replace the Drum motor MCY (see page 1-5-101).
		Motor control PWB	Replace the Motor control PWB
		Engine PWB	1. Check the engine software and upgrade to the latest, if necessary. 2. Replace the engine PWB (see page 1-5-80).

Code	Contents	Related parts	Check procedures/ corrective measures
2203	**Drum motor M steady-state error** [45 ppm/55 ppm model] After drum motor M is stabilized, the ready signal is at the H level for 5 s continuously.	Drum unit	1. To check the motor operation, execute U030 Belt Meand (transfer motor). (see page 1-3-34). 2. Decrease Vpp using U100. Change “set ac gain” of U100 from Auto to mode1. (see page 1-3-74) 3. Confirm that the drum or the drum screw can rotate. 4. If it won’t rotate, replace the drum unit (see page 1-5-57).
		Drum motor M	1. To check the motor operation, execute U030 Belt Meand (transfer motor) (see page 1-3-34). 2. Confirm that the wiring connector is firmly connected and, if necessary, connect the connector all the way in. 3. Check the drive gear can rotate or they are not unusually loaded and, if necessary, replace. Drum motor M and Motor control PWB (YC5) Motor control PWB (YC3) and Engine PWB (YC9) 4. If the wiring is disconnected, shorted or grounded, replace the wiring. 5. Replace the Drum motor MCY (see page 1-5-101).
		Motor control PWB	Replace the Motor control PWB
		Engine PWB	1. Check the engine software and upgrade to the latest, if necessary. 2. Replace the engine PWB (see page 1-5-80).

Code	Contents	Related parts	Check procedures/ corrective measures
2211	**Drum motor K startup error** Drum motor K is not stabilized within 5 s since the motor is activated.	Drum unit	1. To check the motor operation, execute U030 Belt Meand (transfer motor). (see page 1-3-34). 2. Check the drive gear can rotate or they are not unusually loaded and, if necessary, replace. 3. Decrease Vpp using U100. Change “set ac gain” of U100 from Auto to mode1. (see page 1-3-74) 4. Confirm that the drum or the drum screw can rotate. 5. If it won’t rotate, replace the drum unit (see page 1-5-57).
		Drum motor K	1. Confirm that the wiring connector is firmly connected and, if necessary, connect the connector all the way in. Drum motor K and Motor control PWB (YC5) Motor control PWB (YC3) and Engine PWB (YC9) 2. If the wiring is disconnected, shorted or grounded, replace the wiring. 3. Replace the Drum motor K (see page 1-5-101).
		Motor control PWB	Replace the Motor control PWB
		Engine PWB	1. Check the engine software and upgrade to the latest, if necessary. 2. Replace the engine PWB (see page 1-5-80).

Code	Contents	Related parts	Check procedures/ corrective measures
2212	**Drum motor C startup error** [45 ppm/55 ppm model] Drum motor C is not stabilized within 5 s since the motor is activated.	Drum unit	1. To check the motor operation, execute U030 Belt Meand (transfer motor). (see page 1-3-34). 2. Check the drive gear can rotate or they are not unusually loaded and, if necessary, replace. 3. Decrease Vpp using U100. Change “set ac gain” of U100 from Auto to mode1. (see page 1-3-74) 4. Confirm that the drum or the drum screw can rotate. 5. If it won’t rotate, replace the drum unit (see page 1-5-57).
		Drum motor C	1. Confirm that the wiring connector is firmly connected and, if necessary, connect the connector all the way in. Drum motor C and Motor control PWB (YC5) Motor control PWB (YC3) and Engine PWB (YC9) 2. If the wiring is disconnected, shorted or grounded, replace the wiring. 3. Replace the Drum motor C (see page 1-5-101).
		Motor control PWB	Replace the Motor control PWB
		Engine PWB	1. Check the engine software and upgrade to the latest, if necessary. 2. Replace the engine PWB (see page 1-5-80).

Code	Contents	Related parts	Check procedures/ corrective measures
2213	**Drum motor MCY startup error** [30 ppm/35 ppm model] Drum motor MCY is not stabilized within 5 s since the motor is activated.	Drum unit	1. To check the motor operation, execute U030 Belt Meand (transfer motor). (see page 1-3-34). 2. Check the drive gear can rotate or they are not unusually loaded and, if necessary, replace. 3. Decrease Vpp using U100. Change “set ac gain” of U100 from Auto to mode1. (see page 1-3-74) 4. Confirm that the drum or the drum screw can rotate. 5. If it won’t rotate, replace the drum unit (see page 1-5-57).
		Drum motor MCY	1. Confirm that the wiring connector is firmly connected and, if necessary, connect the connector all the way in. Drum motor MCY and Motor control PWB (YC5) Motor control PWB (YC3) and Engine PWB (YC9) 2. If the wiring is disconnected, shorted or grounded, replace the wiring. 3. Replace the Drum motor MCY (see page 1-5-101).
		Motor control PWB	Replace the Motor control PWB
		Engine PWB	1. Check the engine software and upgrade to the latest, if necessary. 2. Replace the engine PWB (see page 1-5-80).

Code	Contents	Related parts	Check procedures/ corrective measures
2213	**Drum motor M startup error** [45 ppm/55 ppm model] Drum motor M is not stabilized within 5 s since the motor is activated.	Drum unit	1. To check the motor operation, execute Belt Mean (transfer motor) by U030 motor operation check (see page 1-3-34). 2. Check the drive gear can rotate or they are not unusually loaded and, if necessary, replace. 3. Decrease Vpp using U100. Change set ac gain of U100 from Auto to mode1. (see page 1-3-74) 4. Confirm that the drum or the drum screw can rotate. 5. If it won't rotate, replace the drum unit (see page 1-5-57).
		Drum motor M	1. Confirm that the wiring connector is firmly connected and, if necessary, connect the connector all the way in. Drum motor M and Motor control PWB (YC5) Motor control PWB (YC3) and Engine PWB (YC9) 2. If the wiring is disconnected, shorted or grounded, replace the wiring. 3. Replace the Drum motor MCY (see page 1-5-101).
		Motor control PWB	Replace the Motor control PWB
		Engine PWB	1. Check the engine software and upgrade to the latest, if necessary. 2. Replace the engine PWB (see page 1-5-80).

Code	Contents	Related parts	Check procedures/ corrective measures
2300	**Fuser motor error** After fuser motor is driven, the ready signal does not turn to L within 2 s. After fuser motor is stabilized, the ready signal is at the H level for 1 s continuously.	Fuser motor	1. To check the motor operation, execute U030 Fuser (fuser motor) (see page 1-3-34). 2. Check the drive gear can rotate or they are not unusually loaded and, if necessary, replace. 3. Confirm that the wiring connector is firmly connected and, if necessary, connect the connector all the way in. Fuser motor and Feed PWB 1(YC18) Feed PWB 1(YC1) and Engine PWB (YC6) 4. If the wiring is disconnected, shorted or grounded, replace the wiring. 5. Replace the fuser motor (see page 1-5-107).
		Engine PWB	1. Check the engine software and upgrade to the latest, if necessary. 2. Replace the engine PWB (see page 1-5-80).
		Feed PWB 1	Replace the Feed PWB 1.
		Fuser unit	Replace the fuser unit (see page 1-5-68).
2500	**Paper feed motor error** After paper feed motor is driven, the ready signal does not turn to L within 2 s. After paper feed motor is stabilized, the ready signal is at the H level for 1 s continuously.	Paper feed motor	1. To check the motor operation, execute U030 Feed (paper feed motor) (see page 1-3-34). 2. Check the paper feed roller and drive gear can rotate or they are not unusually loaded and, if necessary, replace. 3. Confirm that the wiring connector is firmly connected and, if necessary, connect the connector all the way in. Paper feed motor and Feed PWB 2(YC2) Feed PWB 2(YC1) and Engine PWB (YC4) 4. If the wiring is disconnected, shorted or grounded, replace the wiring. 5. Replace the paper feed motor.
		Engine PWB	1. Check the engine software and upgrade to the latest, if necessary. 2. Replace the engine PWB (see page 1-5-80).

Code	Contents	Related parts	Check procedures/ corrective measures
2600	**PF paper feed motor error (large capacity feeder)** After PF paper feed motor is driven, the ready signal does not turn to L within 2 s.	PF paper feed motor	1. To check the feed unit operation, execute U247 LCF- Motor ON (see page 1-3-148). 2. Check the paper feed roller and drive gear can rotate or they are not unusually loaded and, if necessary, replace. 3. Confirm that the wiring connector is firmly connected and, if necessary, connect the connector all the way in. PF paper feed motor and PF main PWB (YC16) 4. If the wiring is disconnected, shorted or grounded, replace the wiring. 5. Replace the paper feed motor.
		PF main PWB	Replace the PF main PWB (Refer to the service manual for the paper feeder).
2610	**PF paper feed motor error (paper feeder)** [45 ppm/55 ppm model] After PF paper feed motor is driven, the ready signal does not turn to L within 2 s.	PF paper feed motor	1. To check the feed unit operation, execute U247 2PF - Motor ON (see page 1-3-148). 2. Check the paper feed roller and drive gear can rotate or they are not unusually loaded and, if necessary, replace. 3. Confirm that the wiring connector is firmly connected and, if necessary, connect the connector all the way in. PF paper feed motor and PF main PWB (YC16) 4. If the wiring is disconnected, shorted or grounded, replace the wiring. 5. Replace the paper feed motor.
		PF main PWB	Replace the PF main PWB (Refer to the service manual for the paper feeder).

Code	Contents	Related parts	Check procedures/ corrective measures
2640	**SD paper feed motor error (side deck)** [45 ppm/55 ppm model] After SD paper feed motor is driven, the ready signal does not turn to L within 2 s.	SD paper feed motor	1. To check the feed unit operation, execute U247 Side deck- Motor ON (see page 1-3-148). 2. Check the paper feed roller and drive gear can rotate or they are not unusually loaded and, if necessary, replace. 3. Confirm that the wiring connector is firmly connected and, if necessary, connect the connector all the way in. SD paper feed motor and SD main PWB (YC16) 4. If the wiring is disconnected, shorted or grounded, replace the wiring. 5. Replace the SD paper feed motor.
		SD main PWB	Replace the SD main PWB (Refer to the service manual for the paper feeder).
2650	**SM paper feed motor error (side multi tray)** [45 ppm/55 ppm model] After SM paper feed motor is driven, the ready signal does not turn to L within 2 s.	SM paper feed motor	1. To check the feed unit operation, execute U247 SMT- Motor ON (see page 1-3-148). 2. Check the paper feed roller and drive gear can rotate or they are not unusually loaded and, if necessary, replace. 3. Confirm that the wiring connector is firmly connected and, if necessary, connect the connector all the way in. SM paper feed motor and SM main PWB (YC5) 4. If the wiring is disconnected, shorted or grounded, replace the wiring. 5. Replace the SM paper feed motor.
		SM main PWB	Replace the SM main PWB (Refer to the service manual for the paper feeder).

Code	Contents	Related parts	Check procedures/ corrective measures
2660	**PF paper feed motor error (side large capacity feeder)** [45 ppm/55 ppm model] After PF paper feed motor is driven, the ready signal does not turn to L within 2 s.	PF paper feed motor	1. To check the feed unit operation, execute U247 Side LCF - Motor ON (see page 1-3-148). 2. Check the paper feed roller and drive gear can rotate or they are not unusually loaded and, if necessary, replace. 3. Confirm that the wiring connector is firmly connected and, if necessary, connect the connector all the way in. PF paper feed motor and PF main PWB (YC16) 4. If the wiring is disconnected, shorted or grounded, replace the wiring. 5. Replace the PF paper feed motor.
		PF main PWB	Replace the PF main PWB (Refer to the service manual for the paper feeder).
2670	**PF paper feed motor error (side paper feeder)** [45 ppm/55 ppm model] After PF paper feed motor is driven, the ready signal does not turn to L within 2 s.	PF paper feed motor	1. Execute Side 2PF - Motor ON of U247 feed unit operation check (see page 1-3-148). 2. Check the paper feed roller and drive gear can rotate or they are not unusually loaded and, if necessary, replace. 3. Confirm that the wiring connector is firmly connected and, if necessary, connect the connector all the way in. PF paper feed motor and PF main PWB (YC16) 4. If the wiring is disconnected, shorted or grounded, replace the wiring. 5. Replace the PF paper feed motor.
		PF main PWB	Replace the PF main PWB (Refer to the service manual for the paper feeder).

Code	Contents	Related parts	Check procedures/ corrective measures
2700	**3-color release motor error** When the color release motor is driven, the color release sensor does not turn on/off for 5 s.	Color release motor Color release sensor (Intermediate transfer belt unit)	1. To check the motor operation, execute U30 CMY Release (see page 1-3-34). 2. Confirm that the wiring connector is firmly connected and, if necessary, connect the connector all the way in. Intermediate transfer belt unit and Engine PWB (YC3) 3. If the wiring is disconnected, shorted or grounded, replace the wiring. 4. Replace the Intermediate transfer belt unit (see page 1-5-62).
		Engine PWB	1. Check the engine software and upgrade to the latest, if necessary. 2. Replace the engine PWB (see page 1-5-80).
2730	**Secondary transfer release motor error** When the transfer release motor is driven, the transfer release sensor does not turn on/off for 5 s.	Transfer release motor	1. To check the motor operation, execute U030 Press Release (see page 1-3-34). 2. Check for broken drive gears and replace if any. 3. Confirm that the wiring connector is firmly connected and, if necessary, connect the connector all the way in. Transfer release motor and relay PWB (YC14) 4. If the wiring is disconnected, shorted or grounded, replace the wiring. 5. Replace the Transfer release motor.
		Transfer release sensor	1. When abnormal noise is observed at the execution of Press Release of U030 motor operation check. 2. Check that the sensor and its mounting board are correctly positioned. 3. Confirm that the wiring connector is firmly connected and, if necessary, connect the connector all the way in. 4. Replace the Transfer release motor.

Code	Contents	Related parts	Check procedures/ corrective measures
2730		Paper conveying unit	1. The main-unit access drawer of the paper conveying unit has no foreign objects adhered or no distorted pins and, if necessary, repair. 2. Check the paper conveying unit is firmly closed. 3. Confirm that the wiring connector is firmly connected and, if necessary, connect the connector all the way in. Relay PWB (YC1) and Feed PWB 1(YC14) 4. If the wiring is disconnected, shorted or grounded, replace the wiring. 5. Replace the paper conveying unit and execute U052 (see page 1-3-47).
		Feed PWB 1	1. Confirm that the wiring connector is firmly connected and, if necessary, connect the connector all the way in. Feed PWB 1 (YC1) and Engine PWB (YC6) 2. Check that the IC on the feed circuit PWB1 is not damaged (by an overcurrent or foreign object) and, if necessary, replace.
		Engine PWB	1. Check the engine software and upgrade to the latest, if necessary. 2. Replace the engine PWB (see page 1-5-80).

Code	Contents	Related parts	Check procedures/ corrective measures
2760	**Transfer motor startup error** Transfer motor is not stabilized within 5 s since the motor is activated.	Transfer motor	1. To check the motor operation, execute U030 Belt Meand (see page 1-3-34). 2. Rotate the drive gear, the belt and the roller by the hand and check that they are not unusually loaded. 3. Clean the Intermediate transfer belt unit. 4. Confirm that the wiring connector is firmly connected and, if necessary, connect the connector all the way in. Transfer motor and Feed PWB 1 (YC13) Feed PWB 1(YC2) and Engine PWB (YC5) 5. If the wiring is disconnected, shorted or grounded, replace the wiring. 6. Replace the Transfer motor.
		Feed PWB 1	Replace the Feed PWB 1.
		Engine PWB	1. Check the engine software and upgrade to the latest, if necessary. 2. Replace the engine PWB (see page 1-5-80).
2770	**Intermediate transfer belt meandering correction error** If the intermediate transfer belt position detecting sensor has derived an incorrect value.	Intermediate transfer belt unit	1. Check that the Intermediate transfer belt unit has been properly installed so that the intermediate belt unit waste toner shutter won't be derailed when the belt unit is strongly inserted. 2. Reinstall the intermediate transfer belt unit.(Insert slowly all the way in. 3. Run U469 Belt Position with B/W and confirm " angle" (position of belt) is within the range (6 to 26) (see page 1-3-203). 4. Check that the main unit is placed perfectly horizontal. 5. Replace the intermediate transfer belt unit (see page 1-5-62).
		Transfer belt sensor (Intermediate transfer belt unit)	1. Clean the toner off of the sensor and its proximity using a blower. 2. Check the sensor actuator are correctly positioned.
		Engine PWB	1. Check the engine software and upgrade to the latest, if necessary. 2. Replace the engine PWB (see page 1-5-80).

Code	Contents	Related parts	Check procedures/ corrective measures
2780	**Intermediate transfer belt skew correction sensor error** An abnormal value is detected to transfer skew sensor.	Transfer belt skew sensor (Intermediate transfer belt unit)	1. Confirm that the wiring connector is firmly connected and, if necessary, connect the connector all the way in. intermediate transfer belt unit and Engine PWB (YC3) 1. Replace the intermediate transfer belt unit (see page 1-5-62).
		Engine PWB	1. Check the engine software and upgrade to the latest, if necessary. 2. Replace the engine PWB (see page 1-5-80).
2790	**Intermediate transfer belt skew correction motor error** When the transfer skew motor is driven, timeouts (300 ms) were detected twice in a row.	Transfer belt skew motor	1. Confirm that the wiring connector is firmly connected and, if necessary, connect the connector all the way in. intermediate transfer belt unit and Engine PWB (YC3) 2. If the wiring is disconnected, shorted or grounded, replace the wiring. 3. Replace the intermediate transfer belt unit (see page 1-5-62).
		Engine PWB	1. Check the engine software and upgrade to the latest, if necessary. 2. Replace the engine PWB (see page 1-5-80).

Code	Contents	Related parts	Check procedures/ corrective measures
2810	**Inner waste toner motor error** Initialized when an error is constantly observed for 2 seconds after the inner waste tonner motor is activated. An error is detected twice for 2.5 seconds after rebooting. The lock detect signal won't be H level three times in a row within 200 ms at 1.25 ms cycles after the inner waste tonner motor has been driven.	Waste toner box	1. Rotate the waste toner spiral by the hand and check that they are not unusually loaded. 2. If the spiral won't rotate, replace the waste toner tank.
		Waste toner motor	1. Rotate the drive gear by the hand and check that they are not unusually loaded. 2. Clean the drive gears and the axle holder. 3. Confirm that the wiring connector is firmly connected and, if necessary, connect the connector all the way in. Waste toner motor and Front PWB (YC16) Front PWB (YC3) and Engine PWB (YC7) 4. If the wiring is disconnected, shorted or grounded, replace the wiring. 5. Replace the waste toner motor.
		Engine PWB	1. Check the engine software and upgrade to the latest, if necessary. 2. Replace the engine PWB (see page 1-5-80).
2820	**Intermediate transfer belt motor steady-state error** After transfer motor is stabilized, the ready signal is at the H level for 5 s continuously. The counter value obtained by timer capture is lower than 2200 for 10 times in a row.	Transfer motor	1. To check the motor operation, execute U030 Belt Meand (see page 1-3-34). 2. Rotate the roller, driving gear by the hand and check that they are not unusually loaded. 3. Clean the intermediate transfer belt unit. 4. Confirm that the wiring connector is firmly connected and, if necessary, connect the connector all the way in. Transfer motor and Feed PWB 1(YC13) Feed PWB 1(YC2) and Engine PWB (YC5) 5. If the wiring is disconnected, shorted or grounded, replace the wiring. 6. Replace the Transfer motor.
		Feed PWB 1	Replace the Feed PWB 1.
		Engine PWB	1. Check the engine software and upgrade to the latest, if necessary. 2. Replace the engine PWB (see page 1-5-80).

Code	Contents	Related parts	Check procedures/ corrective measures
2840	**Intermediate transfer belt cleaning motor error** After transfer cleaning motor is driven, the ready signal won't be L lebel within 2 s. After transfer cleaning motor is stabilized, the ready signal is at the H level for 1 s continuously.	Transfer cleaning motor	1. Rotate the roller and the drive gear by the hand and check that they are not unusually loaded. 2. Check if the waste toner is remaining inside the cleaning unit without being disposed of. 3. Clean inside the cleaning unit. 4. Confirm that the wiring connector is firmly connected and, if necessary, connect the connector all the way in. Transfer cleaning motor and Engine PWB (YC3) 5. If the wiring is disconnected, shorted or grounded, replace the wiring. 6. Replace the transfer cleaning motor.
		Engine PWB	1. Check the engine software and upgrade to the latest, if necessary. 2. Replace the engine PWB (see page 1-5-80).
2850	**Intermediate transferbelt sensor error** The signal is not received for 100 ms in succession.	Transfer motor	1. To check the motor operation, execute U030 Belt Meand (see page 1-3-34). 2. Rotate the roller, driving gear by the hand and check that they are not unusually loaded. 3. Confirm that the wiring connector is firmly connected and, if necessary, connect the connector all the way in. Transfer motor and Feed PWB 1(YC13) Feed PWB 1(YC1) and Engine PWB (YC6) 4. If the wiring is disconnected, shorted or grounded, replace the wiring. 5. Replace the Transfer motor.
		Feed PWB 1	Replace the Feed PWB 1.
		Engine PWB	1. Check the engine software and upgrade to the latest, if necessary. 2. Replace the engine PWB (see page 1-5-80).

Code	Contents	Related parts	Check procedures/ corrective measures
2860	**Intermediate transfer belt sub sensor error** The signal is not received for 100 ms in succession.	Transfer belt sensor	1. To check the motor operation, execute U030 Belt Meand (see page 1-3-34). 2. Check that the drive roller for the sensor pulse can be rotated. 3. Check that the sensor is correctly positioned. 4. Confirm that the wiring connector is firmly connected and, if necessary, connect the connector all the way in. Transfer belt sensor and intermediate transfer belt unit and Engine PWB (YC3) 5. If the wiring is disconnected, shorted or grounded, replace the wiring. 6. Replace the intermediate transfer belt unit.
		Engine PWB	1. Check the engine software and upgrade to the latest, if necessary. 2. Replace the engine PWB (see page 1-5-80).
2950	**Motor control PWB communication error** A communication error from the motor control PWB is detected 10 times in succession.	Motor control PWB	1. Confirm that the wiring connector is firmly connected and, if necessary, connect the connector all the way in. Motor control PWB (YC3) and Engine PWB (YC9) 2. If the wiring is disconnected, shorted or grounded, replace the wiring. 3. Replace the Motor control PWB.
		Engine PWB	1. Check the engine software and upgrade to the latest, if necessary. 2. Replace the engine PWB (see page 1-5-80).

Code	Contents	Related parts	Check procedures/ corrective measures
3100	**Scanner carriage error** The home position is not correct when the power is turned on, at the end of a reading process of the table and document processor.	The scanner mirror frame is being locked after setup.	Check whether the scanner mirror frame has been unlocked and unlock if necessary (see page 1-2-10).
		Scanner motor	1. To check the scanner motor, execute U073 (see page 1-3-66). 2. Move the scanner by the hand to check whether it is unusually difficult to move. 3. Check that the optical wire rope is not disengaged and engage the wire. 4. Confirm that the wiring connector is firmly connected and, if necessary, connect the connector all the way in. Scanner motor and ISC PWB (YC5) ISC PWB (YC3) and Main PWB (YC11) 5. If the wiring is disconnected, shorted or grounded, replace the wiring. 6. Replace the scanner motor.
		Home position sensor	1. Check that the sensor is correctly positioned. 2. Confirm that the wiring connector is firmly connected and, if necessary, connect the connector all the way in. Home position sensor and ISC PWB (YC8) 3. Replace the home position sensor.
		ISC PWB	Replace the ISC PWB and execute U411 (see page 1-3-173).
		Main PWB	Replace the main PWB (see page 1-5-72).

Code	Contents	Related parts	Check procedures/ corrective measures
3210	**CIS lamp error** When input value at the time of CIS illumination does not exceed the threshold value between 5 s.	CIS	1. Execute U906 Separating Operation Release (see page 1-3-223). 2. Execute CCD of U061 lamp check (see page 1-3-55). 3. Confirm that the wiring connector is firmly connected and, if necessary, connect the connector all the way in. CIS and DPSHD PWB (YC2) DPSHD PWB (YC3) and DP relay PWB (YC2) 4. If the wiring is disconnected, shorted or grounded, replace the wiring. 5. Replace the CIS and execute U091 and U411 (see page 1-3-71,1-3-173).
		DPSHD PWB	Replace the DPSHD PWB.
		DP relay PWB	Replace the DP relay PWB.
3220	**CCD lamp activation error** The threshold is calculated for colors at initialization and the pixel which does not exceed that value is greater than 1000.	CIS	1. Execute U906 Separating Operation Release (see page 1-3-223). 2. Confirm that the wiring connector is firmly connected and, if necessary, connect the connector all the way in. LED lamp PWB and ISC PWB (YC6) CCD PWB (YC2) and ISC PWB (YC9) ISC PWB (YC3) and Main PWB (YC11) 3. If the wiring is disconnected, shorted or grounded, replace the wiring. 4. If the LED lamp won't light, replace the LED PWB and execut U411 (see page 1-3-173).
		ISC PWB	Replace the ISC PWB and execute U411 (see page 1-3-173).
		Main PWB	Replace the main PWB (see page 1-5-72).

Code	Contents	Related parts	Check procedures/ corrective measures
3300	**Optical system (AGC) error** One of the gains is FF or 0x89 during the CCD lamp AGC is being processed.	LED lamp PWB	1. To check the lamp, execute U061 CCD (see page 1-3-55). 2. Confirm that the wiring connector is firmly connected and, if necessary, connect the connector all the way in. LED lamp PWB and ISC PWB (YC6) CCD PWB (YC2) and ISC PWB (YC9) ISC PWB (YC3) and Main PWB (YC11) 3. If the wiring is disconnected, shorted or grounded, replace the wiring. 4. If the LED lamp won't light, replace the LED PWB and execut U411 (see page 1-3-173).
		CCD PWB	Replace the ISU and execute U411 (see page 1-3-173).
		ISC PWB	Replace the ISC PWB and execute U411 (see page 1-3-173).
		Main PWB	Replace the main PWB (see page 1-5-72).
3310	**CIS AGC error** After AGC, correct input is not obtained at CIS.	CIS	1. Execute U906 Separating Operation Release (see page 1-3-223). 2. To check the lamp, execute U061 CCD (see page 1-3-55). 3. Confirm that the wiring connector is firmly connected and, if necessary, connect the connector all the way in. DP CIS and DPSHD PWB (YC2) DPSHD PWB (YC3) and DP relay PWB (YC2) 4. If the wiring is disconnected, shorted or grounded, replace the wiring. 5. Replace the CIS and execute U091 and U411 (see page 1-3-71,1-3-173).
		DPSHD PWB	Replace the DPSHD PWB.
3500	**Communication error between scanner and ASIC** An error code is detected.	ISC PWB	1. Confirm that the wiring connector is firmly connected and, if necessary, connect the connector all the way in. ISC PWB (YC3) and Main PWB (YC11) 2. If the wiring is disconnected, shorted or grounded, replace the wiring. 3. Replace the ISC PWB and execute U411 (see page 1-3-173).
		Main PWB	Replace the main PWB (see page 1-5-72).

Code	Contents	Related parts	Check procedures/ corrective measures
3600	**Scanner sequence error**	ISC PWB	1. Execute U021 memory initializing (see page 1-3-31). 2. Replace the ISC PWB and execute U411 (see page 1-3-173).
3700	**Scanner device error**	CCD (ISU)	Since the ISU is mounted with a CCD of different type, install the ISU that matches with the model.
3800	**AFE error** When writing the data, read and write data does not match 3 times in succession. No response is received in 100 ms from AEF.	ISC PWB	1. Confirm that the FFC wiring connector is not distorted and connect the FFC wiring all the way in. CCD PWB (YC2) and ISC PWB (YC9) 2. If the FFC wiring is disconnected, replace the FFC wiring. 3. Replace the ISC PWB and execute U411 (see page 1-5-80).
		CCD PWB	Replace the ISU PWB and execute U411 (see page 1-3-173).
3900	**Backup memory read/write error (ISC PWB)** Read and write data does not match.	Backup memory (ISC PWB)	1. Turn the main power switch off and after 5 seconds, turn it on. 2. Replace the ISC PWB and execute U411 (see page 1-3-173).
4001	**Polygon motor K synchronization error** After polygon motor K is driven, the ready signal does not turn to L within 30 s. The polygon motor speed won't stabilize within 10 s.	Polygon motor K (LSU)	1. Confirm that the wiring connector is firmly connected and, if necessary, connect the connector all the way in. Polygon motor K and LSU relay PWB (YC4) LSU relay PWB (YC3) and Engine PWB (YC12) 2. If the wiring is disconnected, shorted or grounded, replace the wiring. 3. Replace the laser scanner unit (see page 1-5-43).
		Engine PWB	1. Check the engine software and upgrade to the latest, if necessary. 2. Replace the engine PWB (see page 1-5-80).

Code	Contents	Related parts	Check procedures/ corrective measures
4002	**Polygon motor C synchronization error** After polygon motor C is driven, the ready signal does not turn to L within 30 s. The polygon motor speed won't stabilize within 10 s.	Polygon motor C (LSU)	1. Confirm that the wiring connector is firmly connected and, if necessary, connect the connector all the way in. Polygon motor C and LSU relay PWB (YC9) LSU relay PWB (YC3) and Engine PWB (YC12) 2. If the wiring is disconnected, shorted or grounded, replace the wiring. 3. Replace the laser scanner unit (see page 1-5-43).
		Engine PWB	1. Check the engine software and upgrade to the latest, if necessary. 2. Replace the engine PWB (see page 1-5-80).
4003	**Polygon motor M synchronization error** After polygon motor M is driven, the ready signal does not turn to L within 30 s. The polygon motor speed won't stabilize within 10 s.	Polygon motor M (LSU)	1. Confirm that the wiring connector is firmly connected and, if necessary, connect the connector all the way in. Polygon motor M and LSU relay PWB (YC7) LSU relay PWB (YC3) and Engine PWB (YC12) 2. If the wiring is disconnected, shorted or grounded, replace the wiring. 3. Replace the laser scanner unit (see page 1-5-43).
		Engine PWB	1. Check the engine software and upgrade to the latest, if necessary. 2. Replace the engine PWB (see page 1-5-80).
4004	**Polygon motor Y synchronization error** After polygon motor Y is driven, the ready signal does not turn to L within 30 s. The polygon motor speed won't stabilize within 10 s.	Polygon motor Y (LSU)	1. Confirm that the wiring connector is firmly connected and, if necessary, connect the connector all the way in. Polygon motor Y and LSU relay PWB (YC11) LSU relay PWB (YC3) and Engine PWB (YC12) 2. If the wiring is disconnected, shorted or grounded, replace the wiring. 3. Replace the laser scanner unit (see page 1-5-43).
		Engine PWB	1. Check the engine software and upgrade to the latest, if necessary. 2. Replace the engine PWB (see page 1-5-80).

Code	Contents	Related parts	Check procedures/ corrective measures
4011	**Polygon motor K steady-state error** After polygon motor K is stabilized, the ready signal is at the H level for 15 s continuously.	Polygon motor K (LSU)	1. Confirm that the wiring connector is firmly connected and, if necessary, connect the connector all the way in. Polygon motor K and LSU relay PWB (YC4) LSU relay PWB (YC3) and Engine PWB (YC12) 2. If the wiring is disconnected, shorted or grounded, replace the wiring. 3. Replace the laser scanner unit (see page 1-5-43).
		Engine PWB	1. Check the engine software and upgrade to the latest, if necessary. 2. Replace the engine PWB (see page 1-5-80).
4012	**Polygon motor C steady-state error** After polygon motor C is stabilized, the ready signal is at the H level for 15 s continuously.	Polygon motor C (LSU)	1. Confirm that the wiring connector is firmly connected and, if necessary, connect the connector all the way in. Polygon motor C and LSU relay PWB (YC9) LSU relay PWB (YC3) and Engine PWB (YC12) 2. If the wiring is disconnected, shorted or grounded, replace the wiring. 3. Replace the laser scanner unit (see page 1-5-43).
		Engine PWB	1. Check the engine software and upgrade to the latest, if necessary. 2. Replace the engine PWB (see page 1-5-80).
4013	**Polygon motor M steady-state error** After polygon motor M is stabilized, the ready signal is at the H level for 15 s continuously.	Polygon motor M (LSU)	1. Confirm that the wiring connector is firmly connected and, if necessary, connect the connector all the way in. Polygon motor M and LSU relay PWB (YC7) LSU relay PWB (YC3) and Engine PWB (YC12) 2. If the wiring is disconnected, shorted or grounded, replace the wiring. 3. Replace the laser scanner unit (see page 1-5-43).
		Engine PWB	Check the engine software and upgrade to the latest, if necessary. Replace the engine PWB (see page 1-5-80).

Code	Contents	Related parts	Check procedures/ corrective measures
4014	**Polygon motor Y steady-state error** After polygon motor Y is stabilized, the ready signal is at the H level for 15 s continuously.	Polygon motor Y (LSU)	1. Confirm that the wiring connector is firmly connected and, if necessary, connect the connector all the way in. Polygon motor Y and LSU relay PWB (YC11) LSU relay PWB (YC3) and Engine PWB (YC12) 2. If the wiring is disconnected, shorted or grounded, replace the wiring. 3. Replace the laser scanner unit (see page 1-5-43).
		Engine PWB	1. Check the engine software and upgrade to the latest, if necessary. 2. Replace the engine PWB (see page 1-5-80).
4101	**BD initialization error K** After polygon motor K is driven, the BD signal is not detected for 1 s.	PD PWB K (LSU)	1. Confirm that the FFC wiring connector is not distorted and connect the FFC wiring all the way in. Laser scanner unit and LSU relay PWB (YC5) LSU relay PWB (YC3) and Engine PWB (YC12) 2. If the FFC wiring is disconnected, replace the FFC wiring. 3. Replace the laser scanner unit (see page 1-5-43).
		Engine PWB	1. Check the engine software and upgrade to the latest, if necessary. 2. Replace the engine PWB (see page 1-5-80).
4102	**BD initialization error C** After polygon motor C is driven, the BD signal is not detected for 1 s.	PD PWB C (LSU)	1. Confirm that the FFC wiring connector is not distorted and connect the FFC wiring all the way in. Laser scanner unit and LSU relay PWB (YC10) LSU relay PWB (YC3) and Engine PWB (YC12) 2. If the FFC wiring is disconnected, replace the FFC wiring. 3. Replace the laser scanner unit (see page 1-5-43).
		Engine PWB	1. Check the engine software and upgrade to the latest, if necessary. 2. Replace the engine PWB (see page 1-5-80).

Code	Contents	Related parts	Check procedures/ corrective measures
4103	**BD initialization error M** After polygon motor M is driven, the BD signal is not detected for 1 s.	PD PWB M (LSU)	1. Confirm that the FFC wiring connector is not distorted and connect the FFC wiring all the way in. Laser scanner unit and LSU relay PWB (YC8) LSU relay PWB (YC3) and Engine PWB (YC12) 2. If the FFC wiring is disconnected, replace the FFC wiring. 3. Replace the laser scanner unit (see page 1-5-43).
		Engine PWB	1. Check the engine software and upgrade to the latest, if necessary. 2. Replace the engine PWB (see page 1-5-80).
4104	**BD initialization error Y** After polygon motor Y is driven, the BD signal is not detected for 1 s.	PD PWB Y (LSU)	1. Confirm that the FFC wiring connector is not distorted and connect the FFC wiring all the way in. Laser scanner unit and LSU relay PWB (YC12) LSU relay PWB (YC3) and Engine PWB (YC12) 2. If the FFC wiring is disconnected, replace the FFC wiring. 3. Replace the laser scanner unit (see page 1-5-43).
		Engine PWB	1. Check the engine software and upgrade to the latest, if necessary. 2. Replace the engine PWB (see page 1-5-80).
4201	**BD steady-state error K** The BD signal is not detected.	PD PWB K (LSU)	1. Confirm that the FFC wiring connector is not distorted and connect the FFC wiring all the way in. Laser scanner unit and LSU relay PWB (YC5) LSU relay PWB (YC3) and Engine PWB (YC12) 2. If the FFC wiring is disconnected, shorted or grounded, replace the FFC wiring. 3. Replace the laser scanner unit (see page 1-5-43).
		Engine PWB	1. Check the engine software and upgrade to the latest, if necessary. 2. Replace the engine PWB (see page 1-5-80).

Code	Contents	Related parts	Check procedures/ corrective measures
4202	**BD steady-state error C** The BD signal is not detected.	PD PWB C (LSU)	1. Confirm that the FFC wiring connector is not distorted and connect the FFC wiring all the way in. Laser scanner unit and LSU relay PWB (YC10) LSU relay PWB (YC3) and Engine PWB (YC12) 2. If the FFC wiring is disconnected, replace the FFC wiring. 3. Replace the laser scanner unit (see page 1-5-43).
		Engine PWB	1. Check the engine software and upgrade to the latest, if necessary. 2. Replace the engine PWB (see page 1-5-80).
4203	**BD steady-state error M** The BD signal is not detected.	PD PWB M (LSU)	1. Confirm that the FFC wiring connector is not distorted and connect the FFC wiring all the way in. Laser scanner unit and LSU relay PWB (YC8) LSU relay PWB (YC3) and Engine PWB (YC12) 2. If the FFC wiring is disconnected, replace the FFC wiring. 3. Replace the laser scanner unit (see page 1-5-43).
		Engine PWB	1. Check the engine software and upgrade to the latest, if necessary. 2. Replace the engine PWB (see page 1-5-80).
4204	**BD steady-state error Y** The BD signal is not detected.	PD PWB Y (LSU)	1. Confirm that the FFC wiring connector is not distorted and connect the FFC wiring all the way in. Laser scanner unit and LSU relay PWB (YC12) LSU relay PWB (YC3) and Engine PWB (YC12) 2. If the FFC wiring is disconnected, replace the FFC wiring. 3. Replace the laser scanner unit (see page 1-5-43).
		Engine PWB	1. Check the engine software and upgrade to the latest, if necessary. 2. Replace the engine PWB (see page 1-5-80).

Code	Contents	Related parts	Check procedures/ corrective measures
4300	**Polygon motor phase error** ASIC won't settle in completion of phase adjustment for 2 s after a BD signal is detected.	Laser scanner unit	Replace the laser scanner unit (see page 1-5-43).
		Engine PWB	1. Check the engine software and upgrade to the latest, if necessary. 2. Replace the engine PWB (see page 1-5-80).
4600	**LSU cleaning motor error** After LSU cleaning motor is driven, the ready signal does not turn to L within 2 s. After LSU cleaning motor is stabilized, the ready signal is at the H level for 1 s continuously.	LSU cleaning motor	1. Execute LSU cleaning using Adjustment/Maintenance of the system menu. 2. Rotate the drive gear and the cleaning spiral by the hand and check that they are not unusually loaded, and replace if it is damaged. 3. Confirm that the wiring connector is firmly connected and, if necessary, connect the connector all the way in. LSU cleaning motor and Engine PWB (YC21) 4. If the wiring is disconnected, shorted or grounded, replace the wiring. 5. Replace the LSU cleaning motor.
		Engine PWB	1. Check the engine software and upgrade to the latest, if necessary. 2. Replace the engine PWB (see page 1-5-80).

Code	Contents	Related parts	Check procedures/ corrective measures
5101	**Main high-voltage error K** Measure the inflowing current when Vpp is varied in 3 steps and verify if the difference of the currents of 0 and step 2 is less than 42 (51 if lower high-voltage board).	Drum unit	1. Execute U030 Belt Mean Drum Motor and check that the drum motor can rotate (see page 1-3-34). 2. Confirm that the drum or the drum screw can rotate. 3. Check that the discharger lamp is properly connected. 4. If it won't rotate, replace the drum unit.
		Charger roller unit	1. Check that the high-voltage contacts are not distorted or adhered with foreign objects. 2. Reinstall the chrager roller unit.Or, replace the charger roller unit (see page 1-5-59).
		High voltage PWB 1	1. Confirm that the wiring connector is firmly connected and, if necessary, connect the connector all the way in. High voltage PWB 1(YC4)*1,(YC3)*2 and Engine PWB (YC17) 2. If the wiring is disconnected, shorted or grounded, replace the wiring. 3. Replace the High voltage PWB 1 (see page 1-5-88). *1:45 ppm model/ 55ppm model *2:30ppm model/ 35ppm model
		Engine PWB	1. Check the engine software and upgrade to the latest, if necessary. 2. Replace the engine PWB (see page 1-5-80).

Code	Contents	Related parts	Check procedures/ corrective measures
5102	**Main high-voltage error C** Measure the inflowing current when Vpp is varied in 3 steps and verify if the difference of the currents of 0 and step 2 is less than 42 (51 if lower high-voltage board).	Drum unit	1. Execute U030 Belt Mean Drum Motor and check that the drum motor can rotate (see page 1-3-34). 2. Confirm that the drum or the drum screw can rotate. 3. Check that the discharger lamp is properly connected. 4. If it won't rotate, replace the drum unit.
		Charger roller unit	1. Check that the high-voltage contacts are not distorted or adhered with foreign objects. 2. Reinstall the chrager roller unit.Or, replace the charger roller unit (see page 1-5-59).
		High voltage PWB 1	1. Confirm that the wiring connector is firmly connected and, if necessary, connect the connector all the way in. High voltage PWB 1(YC2) and Engine PWB (YC16) 2. If the wiring is disconnected, shorted or grounded, replace the wiring. 3. Replace the High voltage PWB 1 (see page 1-5-88).
		Engine PWB	1. Check the engine software and upgrade to the latest, if necessary. 2. Replace the engine PWB (see page 1-5-80).

Code	Contents	Related parts	Check procedures/ corrective measures
5103	**Main high-voltage error M** Measure the inflowing current when Vpp is varied in 3 steps and verify if the difference of the currents of 0 and step 2 is less than 42 (51 if lower high-voltage board).	Drum unit	1. Execute U030 Belt Mean Drum Motor and check that the drum motor can rotate (see page 1-3-34). 2. Confirm that the drum or the drum screw can rotate. 3. Check that the discharger lamp is properly connected. 4. If it won't rotate, replace the drum unit.
		Charger roller unit	1. Check that the high-voltage contacts are not distorted or adhered with foreign objects. 2. Reinstall the chrager roller unit.Or, replace the charger roller unit (see page 1-5-59).
		High voltage PWB 1	1. Confirm that the wiring connector is firmly connected and, if necessary, connect the connector all the way in. High voltage PWB 1(YC3) and Engine PWB (YC17) 2. If the wiring is disconnected, shorted or grounded, replace the wiring. 3. Replace the High voltage PWB 1 (see page 1-5-88).
		Engine PWB	1. Check the engine software and upgrade to the latest, if necessary. 2. Replace the engine PWB (see page 1-5-80).

Code	Contents	Related parts	Check procedures/ corrective measures
5104	**Main high-voltage error Y** Measure the inflowing current when Vpp is varied in 3 steps and verify if the difference of the currents of 0 and step 2 is less than 42 (51 if lower high-voltage board).	Drum unit	1. Execute U030 Belt Mean Drum Motor and check that the drum motor can rotate (see page 1-3-34). 2. Confirm that the drum or the drum screw can rotate. 3. Check that the discharger lamp is properly connected. 4. If it won't rotate, replace the drum unit.
		Charger roller unit	1. Check that the high-voltage contacts are not distorted or adhered with foreign objects. 2. Reinstall the chrager roller unit.Or, replace the charger roller unit (see page 1-5-57).
		High voltage PWB 1	1. Confirm that the wiring connector is firmly connected and, if necessary, connect the connector all the way in. High voltage PWB 1(YC1) and Engine PWB (YC16) 2. If the wiring is disconnected, shorted or grounded, replace the wiring. 3. Replace the High voltage PWB 1 (see page 1-5-88).
		Engine PWB	1. Check the engine software and upgrade to the latest, if necessary. 2. Replace the engine PWB (see page 1-5-80).

Code	Contents	Related parts	Check procedures/ corrective measures
6000	**Broken fuser heater wire** Fuser thermistor 1 does not reach 100° C/212 °F even after 60 s during warming up. The detected temperature of fuser thermistor 1 does not reach the specified temperature (ready indication temperature) for 420 s in warming up after reached to 100° C/212 °F.	Fuser unit	1. Check that no paper jam is present. 2. Confirm that the wiring connector is firmly connected and, if necessary, connect the connector all the way in. Fuser unit and Engine PWB (YC26) 3. If the wiring is disconnected, shorted or grounded, replace the wiring. 4. Replace the Fuser unit and execute U167 counter clear (see page 1-3-112). (Deteriorated sensitivity due to the toner adhered to the center thermistor.)
		Engine PWB	1. Check the engine software and upgrade to the latest, if necessary. 2. Replace the engine PWB (see page 1-5-80).
		Fuser IH PWB	1. Confirm that the wiring connector is firmly connected and, if necessary, connect the connector all the way in. Fuser IH PWB(YC4) and Engine PWB (YC26) 2. Replace the fuser IH PWB (see page 1-5-96).
		Fuser IH unit	1. Confirm that the wiring connector is firmly connected and, if necessary, connect the connector all the way in. Fuser IH unit and Fuser IH PWB (YC9 and 10) 2. If the wiring is disconnected, shorted or grounded, replace the wiring. 3. Replace the fuser IH unit (see page 1-5-43).
6020	**Abnormally high fuser Center thermistor 1 temperature** Fuser center thermistor 1 detects a temperature higher than 240°C/464°F for 1 s.	Fuser unit	1. Confirm that the wiring connector is firmly connected and, if necessary, connect the connector all the way in. Fuser unit and Engine PWB (YC26) 2. If the wiring is disconnected, shorted or grounded, replace the wiring. 3. Replace the Fuser unit (see page 1-5-68).
		Engine PWB	1. Check the engine software and upgrade to the latest, if necessary. 2. Replace the engine PWB (see page 1-5-80).

Code	Contents	Related parts	Check procedures/ corrective measures
6030	**Broken fuser center thermistor 1 wire** Input from fuser center thermistor 1 is 1010 or more (A/D value) continuously for 1 s. Verify if A/D read in the differential output won't change by 4 or more when it was turned on for 10 seconds.	Fuser unit	1. Check that no paper jam is present. 2. Confirm that the wiring connector is firmly connected and, if necessary, connect the connector all the way in. Fuser unit and Engine PWB (YC26) 3. If the wiring is disconnected, shorted or grounded, replace the wiring. 4. Replace the Fuser unit and execute U167 counter clear (see page 1-3-112). (Deteriorated sensitivity due to the toner adhered to the center thermistor.)
		Engine PWB	1. Check the engine software and upgrade to the latest, if necessary. 2. Replace the engine PWB (see page 1-5-80).
		Fuser IH PWB	1. Confirm that the wiring connector is firmly connected and, if necessary, connect the connector all the way in. Fuser IH PWB(YC4) and Engine PWB (YC26) 2. Replace the Fuser IH PWB (see page 1-5-96).
		Fuser IH unit	1. Confirm that the wiring connector is firmly connected and, if necessary, connect the connector all the way in. Fuser IH unit and Fuser IH PWB (YC9 and 10) 2. If the wiring is disconnected, shorted or grounded, replace the wiring. 3. Replace the fuser IH unit (see page 1-5-70).

Code	Contents	Related parts	Check procedures/ corrective measures
6040	**Fuser heater error** Input from fuser thermistor 1 is abnormal value continuously for 1 s.	Fuser unit	1. Confirm that the wiring connector is firmly connected and, if necessary, connect the connector all the way in. Fuser unit and Engine PWB (YC26) 2. If the wiring is disconnected, shorted or grounded, replace the wiring. 3. Replace the Fuser unit and execute U167 counter clear (see page 1-3-112).
		Engine PWB	1. Check the engine software and upgrade to the latest, if necessary. 2. Replace the engine PWB (see page 1-5-80).
		Fuser IH PWB	1. Confirm that the wiring connector is firmly connected and, if necessary, connect the connector all the way in. Fuser IH PWB (YC4) and Engine PWB (YC26) 2. Replace the fuser IH PWB (see page 1-5-96).

Code	Contents	Related parts	Check procedures/ corrective measures
6050	**Abnormally low fuser center thermistor 1 temperature** Fuser center thermistor 1 detects a temperature lower than 100°C/212°F for 1 s after warming up, during ready or during print. The temperature of thermistor 1 is detected to be less than 70°C/158°F for more than one second during low-power mode.	Power source	1. Check that the operating voltage falls within +/-10%. 2. Check no voltage drop is caused. The heater is deactivated at 70V or lower. 3. Relocate the AC outlet that supplies power.
		Fuser unit	1. Confirm that the wiring connector is firmly connected and, if necessary, connect the connector all the way in. Fuser unit and Engine PWB (YC26) 2. If the wiring is disconnected, shorted or grounded, replace the wiring. 3. Replace the Fuser unit and execute U167 counter clear (see page 1-3-112).
		Engine PWB	1. Check the engine software and upgrade to the latest, if necessary. 2. Replace the engine PWB (see page 1-5-80).
		Fuser IH PWB	1. Confirm that the wiring connector is firmly connected and, if necessary, connect the connector all the way in. Fuser IH PWB(YC4) and Engine PWB (YC26) 2. Replace the Fuser IH PWB (see page 1-5-96).
		Fuser IH unit	1. Confirm that the wiring connector is firmly connected and, if necessary, connect the connector all the way in. Fuser IH unit and Fuser IH PWB (YC9 and 10) Fuser IH PWB(YC4) and Engine PWB (YC26) 2. If the wiring is disconnected, shorted or grounded, replace the wiring. 3. Replace the fuser IH unit (see page 1-5-70).

Code	Contents	Related parts	Check procedures/ corrective measures
6120	**Abnormally high fuser press thermistor 4 temperature** Fuser press thermistor 4 detects a temperature higher than 190°C/374°F for 1 s.	Fuser unit	1. Confirm that the wiring connector is firmly connected and, if necessary, connect the connector all the way in. Fuser unit and Engine PWB (YC26) 2. If the wiring is disconnected, shorted or grounded, replace the wiring. 3. Replace the Fuser unit and execute U167 counter clear (see page 1-3-112).
		Engine PWB	1. Check the engine software and upgrade to the latest, if necessary. 2. Replace the engine PWB (see page 1-5-80).
6130	**Broken fuser press thermistor 4 wire** Input from fuser press thermistor 4 is 992 or more (A/D value) continuously for 60 s.	Fuser unit	1. Confirm that the wiring connector is firmly connected and, if necessary, connect the connector all the way in. Fuser unit and Engine PWB (YC26) Fuser IH PWB(YC4) 2. If the wiring is disconnected, shorted or grounded, replace the wiring. 3. Replace the Fuser unit and execute U167 counter clear (see page 1-3-112).
		Engine PWB	1. Check the engine software and upgrade to the latest, if necessary. 2. Replace the engine PWB (see page 1-5-80).
		Fuser IH PWB	1. Confirm that the wiring connector is firmly connected and, if necessary, connect the connector all the way in. Fuser IH PWB(YC4) and Engine PWB (YC26) 2. Replace the fuser IH PWB (see page 1-5-96).
		Fuser IH unit	1. Confirm that the wiring connector is firmly connected and, if necessary, connect the connector all the way in. Fuser IH unit and Fuser IH PWB (YC9 and 10) 2. If the wiring is disconnected, shorted or grounded, replace the wiring. 3. Replace the fuser IH unit (see page 1-5-70).

Code	Contents	Related parts	Check procedures/ corrective measures
6150	**Abnormally low fuser press thermistor 4 temperature** Fuser press thermistor 4 detects a temperature lower than 30°C/86°F for 1 s after warming up.	Fuser unit	1. Confirm that the wiring connector is firmly connected and, if necessary, connect the connector all the way in. Fuser unit and Engine PWB (YC26) If the wiring is disconnected, shorted or grounded, replace the wiring. 2. Replace the Fuser unit and execute U167 counter clear (see page 1-3-112).
		Engine PWB	1. Check the engine software and upgrade to the latest, if necessary. 2. Replace the engine PWB (see page 1-5-80).
		Fuser IH PWB	1. Confirm that the wiring connector is firmly connected and, if necessary, connect the connector all the way in. Fuser IH PWB(YC4) and Engine PWB (YC26) 2. Replace the fuser IH PWB (see page 1-5-96).
		Fuser IH unit	1. Confirm that the wiring connector is firmly connected and, if necessary, connect the connector all the way in. Fuser IH unit and Fuser IH PWB (YC9 and 10) 2. If the wiring is disconnected, shorted or grounded, replace the wiring. 3. Replace the fuser IH unit (see page 1-5-70).

Code	Contents	Related parts	Check procedures/ corrective measures
6200	**Broken fuser edge heater wire** Fuser edge thermistor 2 does not reach 100° C/212 °F even after 60 s during warming up. The detected temperature of fuser edge thermistor 2 does not reach the specified temperature (ready indication temperature) for 420 s in warming up after reached to 100° C/212 °F.	Fuser unit	1. Confirm that the wiring connector is firmly connected and, if necessary, connect the connector all the way in. Fuser unit and Engine PWB (YC26) 2. If the wiring is disconnected, shorted or grounded, replace the wiring. 3. Replace the Fuser unit and execute U167 counter clear (see page 1-3-112).
		Engine PWB	1. Check the engine software and upgrade to the latest, if necessary. 2. Replace the engine PWB (see page 1-5-80).
		Fuser IH PWB	1. Confirm that the wiring connector is firmly connected and, if necessary, connect the connector all the way in. Fuser IH PWB(YC4) and Engine PWB (YC26) 2. Replace the fuser IH PWB (see page 1-5-96).
		Fuser IH unit	1. Confirm that the wiring connector is firmly connected and, if necessary, connect the connector all the way in. Fuser IH unit and Fuser IH PWB (YC9 and 10) 2. If the wiring is disconnected, shorted or grounded, replace the wiring. 3. Replace the fuser IH unit (see page 1-5-70).

Code	Contents	Related parts	Check procedures/ corrective measures
6220	**Abnormally high fuser edge thermistor 2 temperature** Fuser edge thermistor 2 detects a temperature higher than 245°C/473°F for 1 s.	Fuser unit	1. Confirm that the wiring connector is firmly connected and, if necessary, connect the connector all the way in. Fuser unit and Engine PWB (YC26) 2. If the wiring is disconnected, shorted or grounded, replace the wiring. 3. Replace the Fuser unit and execute U167 counter clear (see page 1-3-112).
		Engine PWB	1. Check the engine software and upgrade to the latest, if necessary. 2. Replace the engine PWB (see page 1-5-80).
		Fuser IH unit	1. Confirm that the wiring connector is firmly connected and, if necessary, connect the connector all the way in. Fuser IH unit and Fuser IH PWB (YC9 and 10) 2. If the wiring is disconnected, shorted or grounded, replace the wiring. 3. Replace the fuser IH unit (see page 1-5-70).

Code	Contents	Related parts	Check procedures/ corrective measures
6230	**Broken fuser edge thermistor 2 wire** The Input signal from the fuser edge thermistor 2 is 992 or more (A/D value) continuously for 1 s when the temperature at the fuser edge thermistor 1 is higher than 100°C/212°F during warming up.	Fuser unit	1. Confirm that the wiring connector is firmly connected and, if necessary, connect the connector all the way in. Fuser unit and Engine PWB (YC26) 2. If the wiring is disconnected, shorted or grounded, replace the wiring. 3. Replace the Fuser unit and execute U167 counter clear (see page 1-3-112).
		Engine PWB	1. Check the engine software and upgrade to the latest, if necessary. 2. Replace the engine PWB (see page 1-5-80).
		Fuser IH PWB	1. Confirm that the wiring connector is firmly connected and, if necessary, connect the connector all the way in. Fuser IH PWB(YC4) and Engine PWB (YC26) 2. Replace the fuser IH PWB (see page 1-5-96).
		Fuser IH unit	1. Confirm that the wiring connector is firmly connected and, if necessary, connect the connector all the way in. Fuser IH unit and Fuser IH PWB (YC9 and 10) Fuser IH PWB(YC4) and Engine PWB (YC26) 2. If the wiring is disconnected, shorted or grounded, replace the wiring. 3. Replace the fuser IH unit (see page 1-5-70).

Code	Contents	Related parts	Check procedures/ corrective measures
6250	**Abnormally low fuser edge thermistor 2 temperature** Fuser edge thermistor 2 detects a temperature lower than 100°C/212°F for 1 s during ready or print. Fuser edge thermistor 2 detects a temperature lower than 50°C/122°F for 1 s during low power mode.	Fuser unit	1. Confirm that the wiring connector is firmly connected and, if necessary, connect the connector all the way in. Fuser unit and Engine PWB (YC26) 2. If the wiring is disconnected, shorted or grounded, replace the wiring. 3. Replace the Fuser unit and execute U167 counter clear (see page 1-3-112).
		Engine PWB	1. Check the engine software and upgrade to the latest, if necessary. 2. Replace the engine PWB (see page 1-5-80).
		Fuser IH PWB	1. Confirm that the wiring connector is firmly connected and, if necessary, connect the connector all the way in. Fuser IH PWB(YC4) and Engine PWB (YC26) 2. Replace the fuser IH PWB (see page 1-5-96).
		Fuser IH unit	1. Confirm that the wiring connector is firmly connected and, if necessary, connect the connector all the way in. Fuser IH unit and Fuser IH PWB (YC9 and 10) Fuser IH PWB(YC4) and Engine PWB (YC26) 2. If the wiring is disconnected, shorted or grounded, replace the wiring. 3. Replace the fuser IH unit (see page 1-5-70).
		Fuser unit	1. Confirm that the wiring connector is firmly connected and, if necessary, connect the connector all the way in. Fuser unit and Engine PWB (YC26) 2. If the wiring is disconnected, shorted or grounded, replace the wiring. 3. Replace the Fuser unit and execute U167 counter clear (see page 1-3-112).

Code	Contents	Related parts	Check procedures/ corrective measures
6320	**Abnormally high fuser middle thermistor 3 temperature** Fuser middle thermistor 3 detects a temperature higher than 205°C/401°F for 1 s.	Fuser unit	1. Confirm that the wiring connector is firmly connected and, if necessary, connect the connector all the way in. Fuser unit and Engine PWB (YC26) 2. If the wiring is disconnected, shorted or grounded, replace the wiring. 3. Replace the Fuser unit and execute U167 counter clear (see page 1-3-112).
		Engine PWB	1. Check the engine software and upgrade to the latest, if necessary. 2. Replace the engine PWB (see page 1-5-80).
6330	**Broken fuser center thermistor 3 wire** Fuser center thermistor 3 detects a temperature lower than 20°C/68°F continuously for 1 s	Fuser unit	1. Confirm that the wiring connector is firmly connected and, if necessary, connect the connector all the way in. Fuser unit and Engine PWB (YC26) 2. If the wiring is disconnected, shorted or grounded, replace the wiring. 3. Replace the Fuser unit and execute U167 counter clear (see page 1-3-112).
		Engine PWB	1. Check the engine software and upgrade to the latest, if necessary. 2. Replace the engine PWB (see page 1-5-80).
		Fuser IH PWB	1. Confirm that the wiring connector is firmly connected and, if necessary, connect the connector all the way in. Fuser IH PWB(YC4) and Engine PWB (YC26) 2. Replace the fuser IH PWB (see page 1-5-96).

Code	Contents	Related parts	Check procedures/ corrective measures
6600	**Fuser belt rotation error** A belt rotating pulse is not received for 1 s. (Engine CPU)	Fuser motor	1. To check the motor operation, execute U030 Fuser (see page 1-3-34). 2. Check that the drive gear can rotate and not heavily loaded and, if necessary, apply grease to the axle holder and gears. 3. Confirm that the wiring connector is firmly connected and, if necessary, connect the connector all the way in. Fuser motor and Feed PWB (YC18) and Engine PWB (YC6) 4. If the wiring is disconnected, shorted or grounded, replace the wiring. 5. Replace the fuser motor (see page 1-5-107).
		Fuser belt sensor	1. Check that the sensor is correctly positioned. 2. Confirm that the wiring connector is firmly connected and, if necessary, connect the connector all the way in. Fuser unit and Engine PWB (YC26) 3. If the wiring is disconnected, shorted or grounded, replace the wiring. 4. Replace the fuser unit and execute U167 counter clear (see page 1-3-112).
		Engine PWB	1. Check the engine software and upgrade to the latest, if necessary. 2. Replace the engine PWB (see page 1-5-80).

Code	Contents	Related parts	Check procedures/ corrective measures
6610	**Fuser release sensor error** The fusing pressure release sensor won't send an off signal in 5 seconds since a pressure release instruction is given for the fusing pressure motor. The fusing pressure release sensor won't send an on signal in 5 seconds since a pressure instruction is given for the fusing pressure motor. .	Fuser release motor	1. To check the motor operation, execute U030 Fuser Release (see page 1-3-34). 2. Check that the drive gear can be rotated and the separation is possible. 3. If the motor won't rotate, confirm that the wiring connector is firmly connected and, if necessary, connect the connector all the way in. Fuser unit and Engine PWB (YC26) 4. If the wiring is disconnected, shorted or grounded, replace the wiring. 5. Replace the fuser unit and execute U167 counter clear (see page 1-3-112).
		Fuser release sensor	1. Check that the sensor is correctly positioned. 2. Check that the sensor is not contaminated or damaged.
		Engine PWB	1. Check the engine software and upgrade to the latest, if necessary. 2. Replace the engine PWB (see page 1-5-80).
6710	**Fuser IH PWB CPU reset error** Watch doc timer has been overflowed.	Fuser IH PWB	1. Confirm that the wiring connector is firmly connected and, if necessary, connect the connector all the way in. Fuser IH PWB(YC4) and Engine PWB (YC26) 2. If the wiring is disconnected, shorted or grounded, replace the wiring. 3. Replace the fuser IH PWB (see page 1-5-96).
		Engine PWB	1. Check the engine software and upgrade to the latest, if necessary. 2. Replace the engine PWB (see page 1-5-80).

Code	Contents	Related parts	Check procedures/ corrective measures
6720	**Fuser IH belt rotation error** While driving, the pulse count is less than 3 for 2 seconds during the input to the rotation pulse signal is 200 msec.	Fuser motor	1. To check the motor operation, execute U030 Fuser (see page 1-3-34). 2. Check that the drive gear can rotate and not heavily loaded and, if necessary, apply grease to the axle holder and gears. 3. Confirm that the wiring connector is firmly connected and, if necessary, connect the connector all the way in. Fuser motor and Feed PWB (YC18) and Engine PWB (YC6) 4. If the wiring is disconnected, shorted or grounded, replace the wiring. 5. Replace the fuser motor (see page 1-5-107).
		Fuser belt sensor	1. Confirm that the wiring connector is firmly connected and, if necessary, connect the connector all the way in. Fuser unit and Engine PWB (YC26) 2. If the wiring is disconnected, shorted or grounded, replace the wiring. 3. Replace the fuser unit and execute U167 counter clear (see page 1-3-112).
		Fuser IH PWB	1. Confirm that the wiring connector is firmly connected and, if necessary, connect the connector all the way in. Fuser IH PWB(YC4) and Engine PWB (YC26) 2. Replace the fuser IH PWB (see page 1-5-96).
		Engine PWB	1. Check the engine software and upgrade to the latest, if necessary. 2. Replace the engine PWB (see page 1-5-80).

Code	Contents	Related parts	Check procedures/ corrective measures
6730	**Abnormally high fuser IH PWB temperature 1 (IGBT1)** The input detect temperature is higher than 115°C/221 °F.	Fuser IH PWB	1. Confirm that the wiring connector is firmly connected and, if necessary, connect the connector all the way in. Fuser IH PWB(YC4) and Engine PWB (YC26) 2. If the wiring is disconnected, shorted or grounded, replace the wiring. 3. Replace the fuser IH PWB (see page 1-5-96).
		Engine PWB	1. Check the engine software and upgrade to the latest, if necessary. 2. Replace the engine PWB (see page 1-5-80).
6740	**Abnormally high fuser IH PWB temperature 2 (IGBT2)** The input detect temperature is higher than 115°C/221 °F.	Fuser IH PWB	1. Confirm that the wiring connector is firmly connected and, if necessary, connect the connector all the way in. Fuser IH PWB(YC4) and Engine PWB (YC26) 2. If the wiring is disconnected, shorted or grounded, replace the wiring. 3. Replace the fuser IH PWB (see page 1-5-96).
		Engine PWB	1. Check the engine software and upgrade to the latest, if necessary. 2. Replace the engine PWB (see page 1-5-80).

Code	Contents	Related parts	Check procedures/ corrective measures
6750	**Fuser IH output over-current error** The output current of IH CPU is higher than 90A for 10 ms in succession.	Fuser IH PWB	1. Confirm that the wiring connector is firmly connected and, if necessary, connect the connector all the way in. Fuser IH PWB(YC4) and Engine PWB (YC26) 2. If the wiring is disconnected, shorted or grounded, replace the wiring. 3. Replace the fuser IH PWB (see page 1-5-96).
		Fuser IH unit	1. Confirm that the wiring connector is firmly connected and, if necessary, connect the connector all the way in. Fuser IH unit and Fuser IH PWB (YC9 and 10) Fuser IH PWB(YC4) and Engine PWB (YC26) 2. If the wiring is disconnected, shorted or grounded, replace the wiring. 3. Replace the fuser IH unit (see page 1-5-70).
		Engine PWB	1. Check the engine software and upgrade to the latest, if necessary. 2. Replace the engine PWB (see page 1-5-80).
6760	**Fuser IH input over-current error** The input current of IH CPU is higher than 20A(100V/120V), 10A(200V) for 100 ms in succession.	Fuser IH PWB	1. Confirm that the wiring connector is firmly connected and, if necessary, connect the connector all the way in. Fuser IH PWB(YC4) and Engine PWB (YC26) 2. If the wiring is disconnected, shorted or grounded, replace the wiring. 3. Replace the fuser IH PWB (see page 1-5-96).
		Engine PWB	1. Check the engine software and upgrade to the latest, if necessary. 2. Replace the engine PWB (see page 1-5-80).

Code	Contents	Related parts	Check procedures/ corrective measures
6770	**Fuser IH low electric power error** Less than 0.6 times of the pre-set power is detected for 120 ms in succession after the IH heater remote has turned on.	Fuser unit	1. Confirm that the wiring connector is firmly connected and, if necessary, connect the connector all the way in. Fuser unit and Fuser IH PWB (YC6) 2. If the wiring is disconnected, shorted or grounded, replace the wiring. 3. Replace the Fuser IH unit (see page 1-5-70).
		Fuser IH PWB	1. Confirm that the wiring connector is firmly connected and, if necessary, connect the connector all the way in. Fuser IH PWB(YC4) and Engine PWB (YC26) 2. If the wiring is disconnected, shorted or grounded, replace the wiring. 3. Replace the Fuser IH PWB (see page 1-5-96).
		Fuser IH unit	1. Confirm that the wiring connector is firmly connected and, if necessary, connect the connector all the way in. Fuser IH unit and Fuser IH PWB (YC9 and 10) Fuser IH PWB(YC4) and Engine PWB (YC26) 2. If the wiring is disconnected, shorted or grounded, replace the wiring. 3. Replace the fuser IH unit (see page 1-5-70).
		Engine PWB	1. Check the engine software and upgrade to the latest, if necessary. 2. Replace the engine PWB (see page 1-5-80).

Code	Contents	Related parts	Check procedures/ corrective measures
6900	**Fuser belt cooling fan error** When the fuser edge fan motor 1 , 2 is driven, alarm signal is detected for 5 s continuously.	Fuser edge fan motor 1, 2	1. To check the fan motor operation, execute U037 Fuser Edge (see page 1-3-43). 2. Confirm that the wiring connector is firmly connected and, if necessary, connect the connector all the way in. Fuser edge fan motor 1 and Engine PWB (YC26) Fuser edge fan motor 2 and Fuser PWB (YC2) Fuser PWB (YC1) and Engine PWB (YC26) 3. If the wiring is disconnected, shorted or grounded, replace the wiring. 4. Replace the fuser unit and execute U167 counter clear (see page 1-3-112).
		Engine PWB	1. Check the engine software and upgrade to the latest, if necessary. 2. Replace the engine PWB (see page 1-5-80).
6910	**Engine software ready error** The device won't engage in ready state in 60 minutes after warming-up has began. (A previous timeout process has not been cancelled.)	Engine PWB	1. Turn the main power switch off and after 5 seconds, turn it on. 2. Reinstall the engine software. 3. Replace the engine PWB (see page 1-5-80).
6920	**Fuser front fan motor error** When the fuser front fan motor is driven, alarm signal is detected for 5 s continuously.	Fuser front fan motor	1. To check the fan motor operation, execute U037 IH Coil (see page 1-3-43). 2. Confirm that the wiring connector is firmly connected and, if necessary, connect the connector all the way in. Fuser front fan motor and Front PWB (YC4) Front PWB (YC3) and Engine PWB (YC7) 3. If the wiring is disconnected, shorted or grounded, replace the wiring. 4. Replace the fuser front fan motor.
		Engine PWB	1. Check the engine software and upgrade to the latest, if necessary. 2. Replace the engine PWB (see page 1-5-80).

Code	Contents	Related parts	Check procedures/ corrective measures
6930	**Fuser rear fan motor error** When the fuser rear fan motor is driven, alarm signal is detected for 5 s continuously.	Fuser rear fan motor	1. To check the fan motor operation, execute U037 Fuser Coling (see page 1-3-43). 2. Confirm that the wiring connector is firmly connected and, if necessary, connect the connector all the way in. Fuser rear fan motor and Engine PWB (YC26) 3. If the wiring is disconnected, shorted or grounded, replace the wiring. 4. Replace the fuser rear fan motor.
		Engine PWB	1. Check the engine software and upgrade to the latest, if necessary. 2. Replace the engine PWB (see page 1-5-80).
6940	**IH PWB cooling fan motor error** When the IH fan motor is driven, the alarm signal is detected for 5 s continuously.	IH fan motor	1. To check the fan motor operation, execute U037 IH Pwb (see page 1-3-43). 2. Confirm that the wiring connector is firmly connected and, if necessary, connect the connector all the way in. IH fan motor and Feed PWB 1(YC11) Feed PWB 1(YC2) and Engine PWB (YC5) 3. If the wiring is disconnected, shorted or grounded, replace the wiring. 4. Replace the IH fan motor.
		Feed PWB 1	Replace the Feed PWB1.
		Engine PWB	1. Check the engine software and upgrade to the latest, if necessary. 2. Replace the engine PWB (see page 1-5-80).

Code	Contents	Related parts	Check procedures/ corrective measures
6950	**Fuser IH PWB communication error** No response is received in 30 ms since a command is sent to IHCPU. A checksum error is detected 10 times in succession.	Power source PWB	1. Confirm that the wiring connector is firmly connected and, if necessary, connect the connector all the way in. Power source PWB (YC9) and Feed PWB 1(YC4) Power source PWB (YC3) and Fuser IH PWB (YC1) 2. If the wiring is disconnected, shorted or grounded, replace the wiring. 3. If the +24V output is not given by the power source PWB (YC9), replace the power source PWB.
		Feed PWB	1. Confirm that the wiring connector is firmly connected and, if necessary, connect the connector all the way in. Power source PWB (YC3) and Fuser IH PWB (YC1) 2. If the wiring is disconnected, shorted or grounded, replace the wiring. 3. If the +24V output is not given by the feed PWB1 (YC27), replace the feed PWB1.
		Fuser IH PWB	1. Confirm that the wiring connector is firmly connected and, if necessary, connect the connector all the way in. Fuser IH PWB(YC4) and Engine PWB (YC26) 2. If the wiring is disconnected, shorted or grounded, replace the wiring. 3. Replace the Fuser IH PWB (see page 1-5-96).
		Engine PWB	1. Check the engine software and upgrade to the latest, if necessary. 2. Replace the engine PWB (see page 1-5-80).
6960	**Current PWB error** The power current is greater than 1A for 5 seconds continuously despite that 500W was indicated as the fuser power during power-up. (45 ppm/ 55 ppm model only)	Current PWB	1. Confirm that the wiring connector is firmly connected and, if necessary, connect the connector all the way in. Current PWB(YC17) and Feed PWB2 (YC13) 2. If the wiring is disconnected, shorted or grounded, replace the wiring. 3. Replace the Current PWB.

Code	Contents	Related parts	Check procedures/ corrective measures
6990	**Fuser power supply incompatibility** Information won't match between the engine backup and the fuser IH PWB.	Differences in settings after initialization	When this has happened after initialization using U021, make settings identical with the voltages on the IH PWB using U169 (see page 1-3-31,1-3-231).
		Fuser IH PWB	Replace with a fuser IH PWB specifically designed with the standard voltage (see page 1-5-96).
		Engine PWB	1. Check the engine software and upgrade to the latest, if necessary. 2. Replace the engine PWB (see page 1-5-80).
7001	**Toner motor K error** A state that the pulse is not detected at the pulse sensor for 200 ms has occurred more than 15 times in a row during the toner motor K is driven. A state that the TMOT_LOCK signal becomes H (locked) is detected after 200 ms when the toner motor K is driven has occurred 15 sets in total.	Toner container K	1. Check that the spiral screw of the toner container can be rotated by the hand. 2. Check for broken gears and replace if any.
		Toner motor K	1. Draw out the toner container and execute U135 to check the toner motor operation (see page 1-3-97). 2. Check the drive gear can rotate or they are not unusually loaded and, if necessary, replace. 3. Confirm that the wiring connector is firmly connected and, if necessary, connect the connector all the way in. Toner motor K and Engine PWB (YC27) 4. If the wiring is disconnected, shorted or grounded, replace the wiring. 5. Replace the Toner motor K.
		Screw sensor K	1. Check that the sensor is correctly positioned. 2. Confirm that the wiring connector is firmly connected and, if necessary, connect the connector all the way in. Screw sensor K and Engine PWB (YC27) 3. Replace the screw sensor K.
		Engine PWB	1. Check the engine software and upgrade to the latest, if necessary. 2. Replace the engine PWB (see page 1-5-80).

Code	Contents	Related parts	Check procedures/ corrective measures
7002	**Toner motor C error** A state that the pulse is not detected at the pulse sensor for 200 ms has occurred more than 15 times in a row during the toner motor C is driven. A state that the TMOT_LOCK signal becomes H (locked) is detected after 200 ms when the toner motor C is driven has occurred 15 sets in total.	Toner container C	1. Check that the spiral screw of the toner container can be rotated by the hand. 2. Check for broken gears and replace if any.
		Toner motor C	1. Draw out the toner container and execute U135 to check the toner motor operation (see page 1-3-97). 2. Check the drive gear can rotate or they are not unusually loaded and, if necessary, replace. 3. Confirm that the wiring connector is firmly connected and, if necessary, connect the connector all the way in. Toner motor C and Engine PWB (YC27) 4. If the wiring is disconnected, shorted or grounded, replace the wiring. 5. Replace the Toner motor C.
		Screw sensor C	1. Check that the sensor is correctly positioned. 2. Confirm that the wiring connector is firmly connected and, if necessary, connect the connector all the way in. Screw sensor C and Engine PWB (YC27) 3. Replace the screw sensor C.
		Engine PWB	1. Check the engine software and upgrade to the latest, if necessary. 2. Replace the engine PWB (see page 1-5-80).

Code	Contents	Related parts	Check procedures/ corrective measures
7003	**Toner motor M error** A state that the pulse is not detected at the pulse sensor for 200 ms has occurred more than 15 times in a row during the toner motor M is driven. A state that the TMOT_LOCK signal becomes H (locked) is detected after 200 ms when the toner motor M is driven has occurred 15 sets in total.	Toner container M	1. Check that the spiral screw of the toner container can be rotated by the hand. 2. Check for broken gears and replace if any.
		Toner motor M	1. Draw out the toner container and execute U135 to check the toner motor operation (see page 1-3-97). 2. Check the drive gear can rotate or they are not unusually loaded and, if necessary, replace. 3. Confirm that the wiring connector is firmly connected and, if necessary, connect the connector all the way in. Toner motor M and Engine PWB (YC27) 4. If the wiring is disconnected, shorted or grounded, replace the wiring. 5. Replace the Toner motor M.
		Screw sensor M	1. Check that the sensor is correctly positioned. 2. Confirm that the wiring connector is firmly connected and, if necessary, connect the connector all the way in. Screw sensorM and Engine PWB (YC27) 3. Replace the screw sensor M.
		Engine PWB	1. Check the engine software and upgrade to the latest, if necessary. 2. Replace the engine PWB (see page 1-5-80).

Code	Contents	Related parts	Check procedures/ corrective measures
7004	**Toner motor Y error** A state that the pulse is not detected at the pulse sensor for 200 ms has occurred more than 15 times in a row during the toner motor Y is driven. A state that the TMOT_LOCK signal becomes H (locked) is detected after 200 ms when the toner motor Y is driven has occurred 15 sets in total.	Toner container Y	1. Check that the spiral screw of the toner container can be rotated by the hand. 1. Check for broken gears and replace if any.
		Toner motor Y	1. Draw out the toner container and execute U135 to check the toner motor operation (see page 1-3-97). 2. Check the drive gear can rotate or they are not unusually loaded and, if necessary, replace. 3. Confirm that the wiring connector is firmly connected and, if necessary, connect the connector all the way in. Toner motor Y and Engine PWB (YC27) 4. If the wiring is disconnected, shorted or grounded, replace the wiring. 5. Replace the Toner motor Y.
		Screw sensor Y	1. Check that the sensor is correctly positioned. 2. Confirm that the wiring connector is firmly connected and, if necessary, connect the connector all the way in. Screw sensor Y and Engine PWB (YC27) 3. Replace the screw sensor Y.
		Engine PWB	1. Check the engine software and upgrade to the latest, if necessary. 2. Replace the engine PWB (see page 1-5-80).

Code	Contents	Related parts	Check procedures/ corrective measures
7101	**Toner sensor K error** Sensor output value of 60 or less or 944 or more continued for 3 s.	Failure of locking the developer waste slot at setup.	If an abnormal noise is heard, check that the developer ejection outlet is released and, if not, release the outlet (see page 1-2-15).
		Toner sensor K	1. Check the toner sensor output by U155 (see page 1-3-107). 2. Confirm that the wiring connector is firmly connected and, if necessary, connect the connector all the way in. Toner sensor K and Front PWB (YC9) Front PWB (YC2) and Engine PWB (YC10) 3. If the wiring is disconnected, shorted or grounded, replace the wiring. 4. Check that the gears of the developer unit K are not damaged and the spiral can rotate. 5. Replace the Developer unit K (see page 1-5-57).
		Toner motor K	1. Draw out the toner container and execute U135 to check the toner motor operation (see page 1-3-97). 2. Check the drive gear can rotate or they are not unusually loaded and, if necessary, replace. 3. Confirm that the wiring connector is firmly connected and, if necessary, connect the connector all the way in. Toner motor K and Engine PWB (YC27) 4. If the wiring is disconnected, shorted or grounded, replace the wiring. 5. Replace the Toner motor K.
		Engine PWB	1. Check the engine software and upgrade to the latest, if necessary. 2. Replace the engine PWB (see page 1-5-80).

Code	Contents	Related parts	Check procedures/ corrective measures
7102	**Toner sensor C error** Sensor output value of 60 or less or 944 or more continued for 3 s.	Failure of locking the developer waste slot at setup.	If an abnormal noise is heard, check that the developer ejection outlet is released and, if not, release the outlet (see page 1-2-15).
		Toner sensor C	1. Check the toner sensor output by U155 (see page 1-3-107). 2. Confirm that the wiring connector is firmly connected and, if necessary, connect the connector all the way in. Toner sensor C and Front PWB (YC13) Front PWB (YC2) and Engine PWB (YC10) 3. If the wiring is disconnected, shorted or grounded, replace the wiring. 4. Check that the gears of the developer unit C are not damaged and the spiral can rotate. 5. Replace the Developer unit C (see page 1-5-57).
		Toner motor C	1. Draw out the toner container and execute U135 to check the toner motor operation (see page 1-3-97). 2. Check the drive gear can rotate or they are not unusually loaded and, if necessary, replace. 3. Confirm that the wiring connector is firmly connected and, if necessary, connect the connector all the way in. Toner motor C and Engine PWB (YC27) 4. If the wiring is disconnected, shorted or grounded, replace the wiring. 5. Replace the Toner motor C.
		Engine PWB	1. Check the engine software and upgrade to the latest, if necessary. 2. Replace the engine PWB (see page 1-5-80).

Code	Contents	Related parts	Check procedures/ corrective measures
7103	**Toner sensor M error** Sensor output value of 60 or less or 944 or more continued for 3 s.	Failure of locking the developer waste slot at setup.	If an abnormal noise is heard, check that the developer ejection outlet is released and, if not, release the outlet (see page 1-2-15).
		Toner sensor M	1. Check the toner sensor output by U155 (see page 1-3-107). 2. Confirm that the wiring connector is firmly connected and, if necessary, connect the connector all the way in. Toner sensor M and Front PWB (YC11) Front PWB (YC2) and Engine PWB (YC10) 3. If the wiring is disconnected, shorted or grounded, replace the wiring. 4. Check that the gears of the developer unit M are not damaged and the spiral can rotate. 5. Replace the Developer unit M (see page 1-5-57).
		Toner motor M	1. Draw out the toner container and execute U135 to check the toner motor operation (see page 1-3-97). 2. Check the drive gear can rotate or they are not unusually loaded and, if necessary, replace. 3. Confirm that the wiring connector is firmly connected and, if necessary, connect the connector all the way in. Toner motor M and ?Engine PWB (YC27) 4. If the wiring is disconnected, shorted or grounded, replace the wiring. 5. Replace the Toner motor M.
		Engine PWB	1. Check the engine software and upgrade to the latest, if necessary. 2. Replace the engine PWB (see page 1-5-80).

Code	Contents	Related parts	Check procedures/ corrective measures
7104	**Toner sensor Y error** Sensor output value of 60 or less or 944 or more continued for 3 s.	Failure of locking the developer waste slot at setup.	If an abnormal noise is heard, check that the developer ejection outlet is released and, if not, release the outlet (see page 1-2-15).
		Toner sensor Y	1. Check the toner sensor output by U155 (see page 1-3-107). 2. Confirm that the wiring connector is firmly connected and, if necessary, connect the connector all the way in. Toner sensor Y and Front PWB (YC15) Front PWB (YC2) and Engine PWB (YC10) 3. If the wiring is disconnected, shorted or grounded, replace the wiring. 4. Check that the gears of the developer unit Y are not damaged and the spiral can rotate. 5. Replace the Developer unit Y (see page 1-5-57).
		Toner motor Y	1. Draw out the toner container and execute U135 to check the toner motor operation (see page 1-3-97). 2. Check the drive gear can rotate or they are not unusually loaded and, if necessary, replace. 3. Confirm that the wiring connector is firmly connected and, if necessary, connect the connector all the way in. Toner motor Y and Engine PWB (YC27) 4. If the wiring is disconnected, shorted or grounded, replace the wiring. 5. Replace the Toner motor Y.
		Engine PWB	1. Check the engine software and upgrade to the latest, if necessary. 2. Replace the engine PWB (see page 1-5-80).

Code	Contents	Related parts	Check procedures/ corrective measures
7200	**Broken outer temperature sensor 2 wire** The sensor input sampling is greater than 230.	Outer temperature sensor 2	1. Confirm Ext/Int is displayed by U139 temperature and humidity (see page 1-3-98). 2. Confirm that the wiring connector is firmly connected and, if necessary, connect the connector all the way in. Outer temperature sensor 2 and Front PWB (YC19) Front PWB (YC2) and Engine PWB (YC10) 3. If the wiring is disconnected, shorted or grounded, replace the wiring. 4. Replace the outer temperature sensor 2.
		Front PWB	Replace the front PWB.
		Engine PWB	1. Check the engine software and upgrade to the latest, if necessary. 2. Replace the engine PWB (see page 1-5-80).
7210	**Short-circuited outer temperature sensor 2** The sensor input sampling is less than 69.	Outer temperature sensor 2	1. Confirm Ext/Int is displayed by U139 temperature and humidity (see page 1-3-98). 2. Confirm that the wiring connector is firmly connected and, if necessary, connect the connector all the way in. Outer temperature sensor 2 and Front PWB (YC19) Front PWB (YC2) and Engine PWB (YC10) 3. If the wiring is disconnected, shorted or grounded, replace the wiring. 4. Replace the outer temperature sensor 2.
		Front PWB	Replace the front PWB
		Engine PWB	1. Check the engine software and upgrade to the latest, if necessary. 2. Replace the engine PWB (see page 1-5-80).

Code	Contents	Related parts	Check procedures/ corrective measures
7221	**Broken LSU thermistor K wire** The sensor input sampling is greater than 230.	LSU thermistor K	1. Confirm LSU is displayed by U139 temperature and humidity (see page 1-3-98). 2. Confirm that the wiring connector is firmly connected and, if necessary, connect the connector all the way in. Laser scanner unit and LSU relay PWB (YC5) LSU relay PWB (YC3) and Engine PWB (YC12) 3. If the wiring is disconnected, shorted or grounded, replace the wiring. 4. Replace the laser scanner unit (see page 1-5-43).
		LSU relay PWB	REPLACE the LSU relay PWB.
		Engine PWB	1. Check the engine software and upgrade to the latest, if necessary. 2. Replace the engine PWB (see page 1-5-80).
7222	**Broken LSU thermistor C wire** The sensor input sampling is greater than 230.	LSU thermistor C	1. Confirm LSU is displayed by U139 temperature and humidity (see page 1-3-98). 2. Confirm that the wiring connector is firmly connected and, if necessary, connect the connector all the way in. Laser scanner unit and LSU relay PWB (YC10) LSU relay PWB (YC3) and Engine PWB (YC12) 3. If the wiring is disconnected, shorted or grounded, replace the wiring. 4. Replace the laser scanner unit (see page 1-5-43).
		LSU relay PWB	REPLACE the LSU relay PWB.
		Engine PWB	1. Check the engine software and upgrade to the latest, if necessary. 2. Replace the engine PWB (see page 1-5-80).

Code	Contents	Related parts	Check procedures/ corrective measures
7223	**Broken LSU thermistor M wire** The sensor input sampling is greater than 230.	LSU thermistor M	1. Confirm LSU is displayed by U139 temperature and humidity (see page 1-3-98). 2. Confirm that the wiring connector is firmly connected and, if necessary, connect the connector all the way in. Laser scanner unit and LSU relay PWB (YC8) LSU relay PWB (YC3) and Engine PWB (YC12) 3. If the wiring is disconnected, shorted or grounded, replace the wiring. 4. Replace the laser scanner unit (see page 1-5-43).
		LSU relay PWB	REPLACE the LSU relay PWB.
		Engine PWB	1. Check the engine software and upgrade to the latest, if necessary. 2. Replace the engine PWB (see page 1-5-80).
7224	**Broken LSU thermistor Y wire** The sensor input sampling is greater than 230.	LSU thermistor Y	1. Confirm LSU is displayed by U139 temperature and humidity (see page 1-3-98). 2. Confirm that the wiring connector is firmly connected and, if necessary, connect the connector all the way in. Laser scanner unit and LSU relay PWB (YC12) LSU relay PWB (YC3) and Engine PWB (YC12) 3. If the wiring is disconnected, shorted or grounded, replace the wiring. 4. Replace the laser scanner unit (see page 1-5-43).
		LSU relay PWB	REPLACE the LSU relay PWB.
		Engine PWB	1. Check the engine software and upgrade to the latest, if necessary. 2. Replace the engine PWB (see page 1-5-80).

Code	Contents	Related parts	Check procedures/ corrective measures
7231	**Short-circuited LSU thermistor K** The sensor input sampling is less than 69.	LSU thermistor K	1. Confirm LSU is displayed by U139 temperature and humidity (see page 1-3-98). 2. Confirm that the wiring connector is firmly connected and, if necessary, connect the connector all the way in. Laser scanner unit and LSU relay PWB (YC5) LSU relay PWB (YC3) and Engine PWB (YC12) 3. If the wiring is disconnected, shorted or grounded, replace the wiring. 4. Replace the laser scanner unit (see page 1-5-43).
		LSU relay PWB	Replace the LSU relay PWB.
		Engine PWB	1. Check the engine software and upgrade to the latest, if necessary. 2. Replace the engine PWB (see page 1-5-80).
7232	**Short-circuited LSU thermistor C** The sensor input sampling is less than 69.	LSU thermistor C	1. Confirm LSU is displayed by U139 temperature and humidity (see page 1-3-98). 2. Confirm that the wiring connector is firmly connected and, if necessary, connect the connector all the way in. Laser scanner unit and LSU relay PWB (YC10) LSU relay PWB (YC3) and Engine PWB (YC12) 3. If the wiring is disconnected, shorted or grounded, replace the wiring. 4. Replace the laser scanner unit (see page 1-5-43).
		LSU relay PWB	REPLACE the LSU relay PWB.
		Engine PWB	1. Check the engine software and upgrade to the latest, if necessary. 2. Replace the engine PWB (see page 1-5-80).

Code	Contents	Related parts	Check procedures/ corrective measures
7233	**Short-circuited LSU thermistor M** The sensor input sampling is less than 69.	LSU thermistor M	1. Confirm LSU is displayed by U139 temperature and humidity (see page 1-3-98). 2. Confirm that the wiring connector is firmly connected and, if necessary, connect the connector all the way in. Laser scanner unit and LSU relay PWB (YC8) LSU relay PWB (YC3) and Engine PWB (YC12) 3. If the wiring is disconnected, shorted or grounded, replace the wiring. 4. Replace the laser scanner unit (see page 1-5-43).
		LSU relay PWB	REPLACE the LSU relay PWB.
		Engine PWB	1. Check the engine software and upgrade to the latest, if necessary. 2. Replace the engine PWB (see page 1-5-80).
7234	**Short-circuited LSU thermistor Y** The sensor input sampling is less than 69.	LSU thermistor Y	1. Confirm LSU is displayed by U139 temperature and humidity (see page 1-3-98). 2. Confirm that the wiring connector is firmly connected and, if necessary, connect the connector all the way in. Laser scanner unit and LSU relay PWB (YC12) LSU relay PWB (YC3) and Engine PWB (YC12) 3. If the wiring is disconnected, shorted or grounded, replace the wiring. 4. Replace the laser scanner unit (see page 1-5-43).
		LSU relay PWB	REPLACE the LSU relay PWB.
		Engine PWB	1. Check the engine software and upgrade to the latest, if necessary. 2. Replace the engine PWB (see page 1-5-80).

Code	Contents	Related parts	Check procedures/ corrective measures
7241	**Broken developer thermistor K wire** The sensor input sampling is greater than 230.	Developer thermistor K	1. Confirm Developing is displayed by U139 temperature and humidity (see page 1-3-98). 2. Confirm that the wiring connector is firmly connected and, if necessary, connect the connector all the way in. Developer unit K and Front PWB (YC9) Front PWB (YC2) and Engine PWB (YC10) 3. If the wiring is disconnected, shorted or grounded, replace the wiring. 4. Replace the Developer unit K (see page 1-5-57).
		Front PWB	Replace the front PWB
		Engine PWB	1. Check the engine software and upgrade to the latest, if necessary. 2. Replace the engine PWB (see page 1-5-80).
7242	**Broken developer thermistor C wire** The sensor input sampling is greater than 230.	Developer thermistor C	1. Confirm Developing is displayed by U139 temperature and humidity (see page 1-3-98). 2. Confirm that the wiring connector is firmly connected and, if necessary, connect the connector all the way in. Developer unit C and Front PWB (YC13) Front PWB (YC2) and Engine PWB (YC10) 3. If the wiring is disconnected, shorted or grounded, replace the wiring. 4. Replace the Developer unit C (see page 1-5-57).
		Front PWB	Replace the front PWB
		Engine PWB	1. Check the engine software and upgrade to the latest, if necessary. 2. Replace the engine PWB (see page 1-5-80).

Code	Contents	Related parts	Check procedures/ corrective measures
7243	**Broken developer thermistor M wire** The sensor input sampling is greater than 230.	Developer thermistor M	1. Confirm Developing is displayed by U139 temperature and humidity (see page 1-3-98). 2. Confirm that the wiring connector is firmly connected and, if necessary, connect the connector all the way in. Developer unit M and Front PWB (YC11) Front PWB (YC2) and Engine PWB (YC10) 3. If the wiring is disconnected, shorted or grounded, replace the wiring. 4. Replace the Developer unit M (see page 1-5-57).
		Front PWB	Replace the front PWB
		Engine PWB	1. Check the engine software and upgrade to the latest, if necessary. 2. Replace the engine PWB (see page 1-5-80).
7244	**Broken developer thermistor Y wire** The sensor input sampling is greater than 230.	Developer thermistor Y	1. Confirm Developing is displayed by U139 temperature and humidity (see page 1-3-98). 2. Confirm that the wiring connector is firmly connected and, if necessary, connect the connector all the way in. Developer unit Y and Front PWB (YC15) Front PWB (YC2) and Engine PWB (YC10) 3. If the wiring is disconnected, shorted or grounded, replace the wiring. 4. Replace the Developer unit Y (see page 1-5-57).
		Front PWB	Replace the front PWB
		Engine PWB	1. Check the engine software and upgrade to the latest, if necessary. 2. Replace the engine PWB (see page 1-5-80).

Code	Contents	Related parts	Check procedures/ corrective measures
7251	**Short-circuited developer thermistor K** The sensor input sampling is less than 69.	Developer thermistor K	1. Confirm Developing is displayed by U139 temperature and humidity (see page 1-3-98). 2. Confirm that the wiring connector is firmly connected and, if necessary, connect the connector all the way in. Developer unit K and Front PWB (YC9) Front PWB (YC2) and Engine PWB (YC10) 3. If the wiring is disconnected, shorted or grounded, replace the wiring. 4. Replace the Developer unit K (see page 1-5-57).
		Front PWB	Replace the front PWB
		Engine PWB	1. Check the engine software and upgrade to the latest, if necessary. 2. Replace the engine PWB (see page 1-5-80).
7252	**Short-circuited developer thermistor C** The sensor input sampling is less than 69.	Developer thermistor C	1. Confirm Developing is displayed by U139 temperature and humidity (see page 1-3-98). 2. Confirm that the wiring connector is firmly connected and, if necessary, connect the connector all the way in. Developer unit C and Front PWB (YC13) Front PWB (YC2) and Engine PWB (YC10) 3. If the wiring is disconnected, shorted or grounded, replace the wiring. 4. Replace the Developer unit C (see page 1-5-57).
		Front PWB	Replace the front PWB
		Engine PWB	1. Check the engine software and upgrade to the latest, if necessary. 2. Replace the engine PWB (see page 1-5-80).

Code	Contents	Related parts	Check procedures/ corrective measures
7253	**Short-circuited developer thermistor M** The sensor input sampling is less than 69.	Developer thermistor M	1. Confirm Developing is displayed by U139 temperature and humidity (see page 1-3-98). 2. Confirm that the wiring connector is firmly connected and, if necessary, connect the connector all the way in. Developer unit M and Front PWB (YC11) Front PWB (YC2) and Engine PWB (YC10) 3. If the wiring is disconnected, shorted or grounded, replace the wiring. 4. Replace the Developer unit M (see page 1-5-57).
		Front PWB	Replace the front PWB
		Engine PWB	1. Check the engine software and upgrade to the latest, if necessary. 2. Replace the engine PWB (see page 1-5-80).
7254	**Short-circuited developer thermistor Y wire** The sensor input sampling is less than 69.	Developer thermistor Y	1. Confirm Developing is displayed by U139 temperature and humidity (see page 1-3-98). 2. Confirm that the wiring connector is firmly connected and, if necessary, connect the connector all the way in. Developer unit Y and Front PWB (YC15) Front PWB (YC2) and Engine PWB (YC10) 3. If the wiring is disconnected, shorted or grounded, replace the wiring. 4. Replace the Developer unit Y (see page 1-5-57).
		Front PWB	Replace the front PWB
		Engine PWB	1. Check the engine software and upgrade to the latest, if necessary. 2. Replace the engine PWB (see page 1-5-80).

Code	Contents	Related parts	Check procedures/ corrective measures
7401	**Developer unit K type mis-match error** Improper adaptation of the machine and developer unit K is detected.	Different type of the developer unit is installed.	Install the developer unit of the correct type.
		Developer unit K	1. Confirm that the wiring connector is firmly connected and, if necessary, connect the connector all the way in. Developer unit K and Front PWB (YC9) Front PWB (YC2) and Engine PWB (YC10) 2. If the wiring is disconnected, shorted or grounded, replace the wiring.
7402	**Developer unit C type mis-match error** Improper adaptation of the machine and developer unit C is detected.	Different type of the developer unit is installed.	Install the developer unit of the correct type.
		Developer unit C	1. Confirm that the wiring connector is firmly connected and, if necessary, connect the connector all the way in. Developer unit C and Front PWB (YC13) Front PWB (YC2) and Engine PWB (YC10) 2. If the wiring is disconnected, shorted or grounded, replace the wiring.
7403	**Developer unit M type mis-match error** Improper adaptation of the machine and developer unit M is detected.	Different type of the developer unit is installed.	Install the developer unit of the correct type.
		Developer unit M	1. Confirm that the wiring connector is firmly connected and, if necessary, connect the connector all the way in. Developer unit M and Front PWB (YC11) Front PWB (YC2) and Engine PWB (YC10) 2. If the wiring is disconnected, shorted or grounded, replace the wiring.
7404	**Developer unit Y type mis-match error** Improper adaptation of the machine and developer unit Y is detected.	Different type of the developer unit is installed.	Install the developer unit of the correct type.
		Developer unit Y	1. Confirm that the wiring connector is firmly connected and, if necessary, connect the connector all the way in. Developer unit Y and Front PWB (YC15) Front PWB (YC2) and Engine PWB (YC10) 2. If the wiring is disconnected, shorted or grounded, replace the wiring.

Code	Contents	Related parts	Check procedures/ corrective measures
7601	**ID sensor 1 error** An abnormal value is detected in the input data to ID sensor 1. Dark potential error FrontDarkP and FrontDarkS are greater than 0.80V. Light potential error FrontBrightS is smaller than FrontDarkS. FrontBrightP is smaller than [FrontDarkP + 0.5V].	ID sensor1 (front)	1. Execute U464 Calib for setting ID compensation operation and check the displayed values by U465 Boas Calib for ID compensation reference. (see page 1-3-197,1-3-200). 2. Detach the imtermediate intermediate transfer belt unit and clean the ID sensor on its surface. 3. Confirm that the wiring connector is firmly connected and, if necessary, connect the connector all the way in. ID sensor 1 (front) and Feed PWB 1(YC10) Feed PWB 1(YC1) and Engine PWB (YC6) 4. If the wiring is disconnected, shorted or grounded, replace the wiring.
		Feed PWB 1	Replace the Feed PWB 1.
		Engine PWB	1. Check the engine software and upgrade to the latest, if necessary. 2. Replace the engine PWB (see page 1-5-80).
7602	**ID sensor 2 error** Dark potential error RearDarkP and RearDarkS are greater than 0.80V. Light potential error RearBrightS is smaller than RearDarkS. RearBrightP is smaller than [RearDarkP + 0.5V].	ID sensor 2 (rear)	1. Execute U464 Calib for setting ID compensation operation and check the displayed values by U465 Boas Calib for ID compensation reference. (see page 1-3-197,1-3-200). 2. Detach the imtermediate intermediate transfer belt unit and clean the ID sensor on its surface. 3. Confirm that the wiring connector is firmly connected and, if necessary, connect the connector all the way in. ID sensor2 (rear) and Feed PWB 1(YC10) Feed PWB 1(YC1) and Engine PWB (YC6) 4. If the wiring is disconnected, shorted or grounded, replace the wiring.
		Feed PWB 1	Replace the Feed PWB 1.
		Engine PWB	1. Check the engine software and upgrade to the latest, if necessary. 2. Replace the engine PWB (see page 1-5-80).

Code	Contents	Related parts	Check procedures/ corrective measures
7800	**Broken outer temperature sensor 1 wire** The device did not respond for more than 5 ms during reading, in 5 times.	Outer temperature sensor 1	1. Confirm that the wiring connector is firmly connected and, if necessary, connect the connector all the way in. Outer temperature sensor 1 and Front PWB (YC19) Front PWB (YC2) and Engine PWB (YC10) 2. If the wiring is disconnected, shorted or grounded, replace the wiring. 3. Replace the Outer temperature sensor 1.
		Front PWB	Replace the front PWB
		Engine PWB	1. Check the engine software and upgrade to the latest, if necessary. 2. Replace the engine PWB (see page 1-5-80).
7901	**Drum K EEPROM error** No response is issued from the device in reading/writing for 5 ms or more and this problem is repeated five times successively. Mismatch of reading data from two locations occurs 8 times successively. Mismatch between writing data and reading data occurs 8 times successively.	DR PWB-K	1. Confirm that the wiring connector is firmly connected and, if necessary, connect the connector all the way in. DR PWB-K and Front PWB (YC7) Front PWB (YC2) and Engine PWB (YC10) 2. If the wiring is disconnected, shorted or grounded, replace the wiring. 3. Replace the Drum unit K (see page 1-5-57).
		Front PWB	Replace the front PWB
		Engine PWB	1. Check the engine software and upgrade to the latest, if necessary. 2. Replace the engine PWB (see page 1-5-80).

Code	Contents	Related parts	Check procedures/ corrective measures
7902	**Drum C EEPROM error** No response is issued from the device in reading/writing for 5 ms or more and this problem is repeated five times successively. Mismatch of reading data from two locations occurs 8 times successively. Mismatch between writing data and reading data occurs 8 times successively.	DR PWB- C	1. Confirm that the wiring connector is firmly connected and, if necessary, connect the connector all the way in. DR PWB- C and Front PWB (YC12) Front PWB (YC2) and Engine PWB (YC10) 2. If the wiring is disconnected, shorted or grounded, replace the wiring. 3. Replace the Drum unit C (see page 1-5-57).
		Front PWB	Replace the front PWB
		Engine PWB	1. Check the engine software and upgrade to the latest, if necessary. 2. Replace the engine PWB (see page 1-5-80).
7903	**Drum M EEPROM error** No response is issued from the device in reading/writing for 5 ms or more and this problem is repeated five times successively. Mismatch of reading data from two locations occurs 8 times successively. Mismatch between writing data and reading data occurs 8 times successively.	DR PWB- M	1. Confirm that the wiring connector is firmly connected and, if necessary, connect the connector all the way in. DR PWB- M and Front PWB (YC10) Front PWB (YC2) and Engine PWB (YC10) 2. If the wiring is disconnected, shorted or grounded, replace the wiring. 3. Replace the Drum unit M (see page 1-5-57).
		Front PWB	Replace the front PWB
		Engine PWB	1. Check the engine software and upgrade to the latest, if necessary. 2. Replace the engine PWB (see page 1-5-80).
7904	**Drum Y EEPROM error** No response is issued from the device in reading/writing for 5 ms or more and this problem is repeated five times successively. Mismatch of reading data from two locations occurs 8 times successively. Mismatch between writing data and reading data occurs 8 times successively.	DRPWB- Y	1. Confirm that the wiring connector is firmly connected and, if necessary, connect the connector all the way in. DRPWB- Y and Front PWB (YC14) Front PWB (YC2) and Engine PWB (YC10) 2. If the wiring is disconnected, shorted or grounded, replace the wiring. 3. Replace the Drum unit Y (see page 1-5-57).
		Front PWB	Replace the front PWB
		Engine PWB	1. Check the engine software and upgrade to the latest, if necessary. 2. Replace the engine PWB (see page 1-5-80).

Code	Contents	Related parts	Check procedures/ corrective measures
7911	**Developer unit K EEPROM error** No response is issued from the device in reading/writing for 5 ms or more and this problem is repeated five times successively. Mismatch of reading data from two locations occurs 8 times successively. Mismatch between writing data and reading data occurs 8 times successively.	Developer unit K	1. Confirm that the wiring connector is firmly connected and, if necessary, connect the connector all the way in. Developer unit K and Front PWB (YC9) Front PWB (YC2) and Engine PWB (YC10) 2. If the wiring is disconnected, shorted or grounded, replace the wiring. 3. Replace the Developer unit K (see page 1-5-57).
		Front PWB	Replace the front PWB
		Engine PWB	1. Check the engine software and upgrade to the latest, if necessary. 2. Replace the engine PWB (see page 1-5-80).
7912	**Developer unit C EEPROM error** No response is issued from the device in reading/writing for 5 ms or more and this problem is repeated five times successively. Mismatch of reading data from two locations occurs 8 times successively. Mismatch between writing data and reading data occurs 8 times successively.	Developer unit C	1. Confirm that the wiring connector is firmly connected and, if necessary, connect the connector all the way in. Developer unit C and Front PWB (YC13) Front PWB (YC2) and Engine PWB (YC10) 2. If the wiring is disconnected, shorted or grounded, replace the wiring. 3. Replace the Developer unit C (see page 1-5-57).
		Front PWB	Replace the front PWB
		Engine PWB	1. Check the engine software and upgrade to the latest, if necessary. 2. Replace the engine PWB (see page 1-5-80).

Code	Contents	Related parts	Check procedures/ corrective measures
7913	**Developer unit M EEPROM error** No response is issued from the device in reading/writing for 5 ms or more and this problem is repeated five times successively. Mismatch of reading data from two locations occurs 8 times successively. Mismatch between writing data and reading data occurs 8 times successively.	Developer unit M	1. Confirm that the wiring connector is firmly connected and, if necessary, connect the connector all the way in. Developer unit M and Front PWB (YC11) Front PWB (YC2) and Engine PWB (YC10) 2. If the wiring is disconnected, shorted or grounded, replace the wiring. 3. Replace the Developer unit M (see page 1-5-57).
		Front PWB	Replace the front PWB
		Engine PWB	1. Check the engine software and upgrade to the latest, if necessary. 2. Replace the engine PWB (see page 1-5-80).
7914	**Developer unit Y EEPROM error** No response is issued from the device in reading/writing for 5 ms or more and this problem is repeated five times successively. Mismatch of reading data from two locations occurs 8 times successively. Mismatch between writing data and reading data occurs 8 times successively.	Developer unit Y	1. Confirm that the wiring connector is firmly connected and, if necessary, connect the connector all the way in. Developer unit Y and Front PWB (YC15) Front PWB (YC2) and Engine PWB (YC10) 2. If the wiring is disconnected, shorted or grounded, replace the wiring. 3. Replace the Developer unit Y (see page 1-5-57).
		Front PWB	Replace the front PWB
		Engine PWB	1. Check the engine software and upgrade to the latest, if necessary. 2. Replace the engine PWB (see page 1-5-80).

Code	Contents	Related parts	Check procedures/ corrective measures
7941	**Laser scanner unit K EEPROM error** [35 ppm/ 45 ppm/ 55 ppm model] Mismatch of reading data from two locations occurs 8 times successively. Mismatch between writing data and reading data occurs 8 times successively.	APC PWB K	1. Confirm that the FFC wiring connector is not distorted and connect the FFC wiring all the way in. APC PWB K and LSU relay PWB (YC5) LSU relay PWB (YC2) and Engine PWB (YC11) 2. If the FFC wiring is disconnected, shorted or grounded, replace the FFC wiring. 3. Replace the laser scanner unit (see page 1-5-43).
		LSU relay PWB	Replace the LSU relay PWB.
		Engine PWB	1. Check the engine software and upgrade to the latest, if necessary. 2. Replace the engine PWB (see page 1-5-80).
7942	**Laser scanner unit C EEPROM error** [35 ppm/ 45 ppm/ 55 ppm model] Mismatch of reading data from two locations occurs 8 times successively. Mismatch between writing data and reading data occurs 8 times successively.	APC PWB C	1. Confirm that the FFC wiring connector is not distorted and connect the FFC wiring all the way in. APC PWB C and LSU relay PWB (YC10) LSU relay PWB (YC2) and Engine PWB (YC11) 2. If the FFC wiring is disconnected, shorted or grounded, replace the FFC wiring. 3. Replace the laser scanner unit (see page 1-5-43).
		LSU relay PWB	Replace the LSU relay PWB.
		Engine PWB	1. Check the engine software and upgrade to the latest, if necessary. 2. Replace the engine PWB (see page 1-5-80).

Code	Contents	Related parts	Check procedures/ corrective measures
7943	**Laser scanner unit M EEPROM error** [35 ppm/ 45 ppm/ 55 ppm model] Mismatch of reading data from two locations occurs 8 times successively. Mismatch between writing data and reading data occurs 8 times successively.	APC PWB M	1. Confirm that the FFC wiring connector is not distorted and connect the FFC wiring all the way in. APC PWB M and LSU relay PWB (YC8) LSU relay PWB (YC2) and Engine PWB (YC11) 2. If the FFC wiring is disconnected, shorted or grounded, replace the FFC wiring. 3. Replace 1-5-43the laser scanner unit (see page 1-5-43).
		LSU relay PWB	Replace the LSU relay PWB.
		Engine PWB	1. Check the engine software and upgrade to the latest, if necessary. 2. Replace the engine PWB (see page 1-5-80).
7944	**Laser scanner unit Y EEPROM error** [35 ppm/ 45 ppm/ 55 ppm model] Mismatch of reading data from two locations occurs 8 times successively. Mismatch between writing data and reading data occurs 8 times successively.	APC PWB Y	1. Confirm that the FFC wiring connector is not distorted and connect the FFC wiring all the way in. APC PWB Y and LSU relay PWB (YC12) LSU relay PWB (YC2) and Engine PWB (YC11) 2. If the FFC wiring is disconnected, shorted or grounded, replace the FFC wiring. 3. Replace the laser scanner unit (see page 1-5-43).
		LSU relay PWB	Replace the LSU relay PWB.
		Engine PWB	1. Check the engine software and upgrade to the latest, if necessary. 2. Replace the engine PWB (see page 1-5-80).

Code	Contents	Related parts	Check procedures/ corrective measures
8010	**Punch motor 1 error** When the punch motor is driven, punch home position sensor does not turn on within 200 ms.	Punch motor	1. Execute U240 Motor - Punch to check the finisher operation (see page 1-3-134). 2. Manipulate the punch up and down to check it can smoothly move up and down. 3. Check that the drive from the motor reaches the punch cam. 4. Confirm that the wiring connector is firmly connected and, if necessary, connect the connector all the way in. Punch motor and Punch PWB (YC4) 5. If the wiring is disconnected, shorted or grounded, replace the wiring. 6. Replace the punch motor.
		Punch home position sensor	1. Execute U241 Punch - Punch HP to check the finisher switch (see page 1-3-136). 2. Check that the sensor and its mounting bracket are correctly positioned. 3. Confirm that the wiring connector is firmly connected and, if necessary, connect the connector all the way in. Punch home position sensor and Punch PWB (YC8) 4. Replace the Punch home position sensor.
		Punch PWB	1. Confirm that the wiring connector is firmly connected and, if necessary, connect the connector all the way in. Punch PWB (YC1) and DF main PWB (YC7) (4000-sheet finisher) Punch PWB (YC1) and DF main PWB (YC8) (1000-sheet finisher) 2. Replace the punch PWB.
		DF main PWB	Replace the DF main PWB (Refer to the service manual for the document finisher).

Code	Contents	Related parts	Check procedures/ corrective measures
8020	**Punch motor 2 error** Home position is not obtained in 3 s after home position is initialized or in standby.	Punch motor	1. Execute U240 Motor - Punch to check the finisher operation (see page 1-3-134). 2. Manipulate the punch up and down to check it can smoothly move up and down. 3. Check that the drive from the motor reaches the punch cam. 4. Confirm that the wiring connector is firmly connected and, if necessary, connect the connector all the way in. Punch motor and Punch PWB (YC4) 5. If the wiring is disconnected, shorted or grounded, replace the wiring. 6. Replace the punch motor.
		Punch PWB	1. Confirm that the wiring connector is firmly connected and, if necessary, connect the connector all the way in. Punch PWB (YC1) and DF main PWB (YC7)(4000-sheet finisher) Punch PWB (YC1) and DF main PWB (YC8)(1000-sheet finisher) 2. Replace the punch PWB.
		DF main PWB	Replace the DF main PWB (Refer to the service manual for the document finisher).

Code	Contents	Related parts	Check procedures/ corrective measures
8030	**Punch motor 3 error** Home position does not turn from On to Off in 50 ms after home position has been initialized.	Punch motor	1. Execute U240 Motor - Punch to check the finisher operation (see page 1-3-134). 2. Manipulate the punch up and down to check it can smoothly move up and down. 3. Check that the drive from the motor reaches the punch cam. 4. Confirm that the wiring connector is firmly connected and, if necessary, connect the connector all the way in. Punch motor and Punch PWB (YC4) 5. If the wiring is disconnected, shorted or grounded, replace the wiring. 6. Replace the punch motor.
		Punch PWB	1. Confirm that the wiring connector is firmly connected and, if necessary, connect the connector all the way in. Punch PWB (YC1) and DF main PWB (YC7) (4000-sheet finisher) Punch PWB (YC1) and DF main PWB (YC8) (1000-sheet finisher) 2. Replace the punch PWB.
		DF main PWB	Replace the DF main PWB (Refer to the service manual for the document finisher).

Code	Contents	Related parts	Check procedures/ corrective measures
8090	**DF paddle motor error** When the DF paddle motor is driven, DF paddle sensor does not turn on within 1 s.	DF paddle motor	1. Execute U240 Motor - Beat to check the finisher operation (see page 1-3-134). 2. Check that the paddle can rotate. 3. Check that the drive from the motor reaches the paddle. 4. Confirm that the wiring connector is firmly connected and, if necessary, connect the connector all the way in. DF paddle motor and DF main PWB (YC15) (4000-sheet finisher) DF paddle motor and DF main PWB (YC11) (1000-sheet finisher) 5. If the wiring is disconnected, shorted or grounded, replace the wiring. 6. Replace the DF paddle motor.
		DF paddle sensor	1. Execute U241 Finisher - Bundle Eject HP to check the finisher switch (see page 1-3-136). 2. Check that the sensor and its mounting board are correctly positioned. 3. Confirm that the wiring connector is firmly connected and, if necessary, connect the connector all the way in. DF paddle sensor and DF main PWB (YC22) (4000-sheet finisher) DF paddle sensor and DF main PWB (YC20) (1000-sheet finisher) 4. Replace the DF paddle sensor.
		DF main PWB	Replace the DF main PWB (Refer to the service manual for the document finisher).

Code	Contents	Related parts	Check procedures/ corrective measures
8100	**DF eject release motor error** When the DF eject release motor is driven, DF bundle discharge sensor does not turn on within 1 s.	DF eject release motor DF bundle discharge unit sensor	1. Execute Motor - Eject Unlock (Full) of U240 finisher operation check (see page 1-3-134). 2. Check that the eject guide of the process tray is opened and, if not, correct the guide. 3. Check that the drive from the motor reaches the eject guide. 4. Confirm that the wiring connector is firmly connected and, if necessary, connect the connector all the way in. DF bundle discharge unit sensor and DF main PWB (YC22)(4000-sheet finisher) DF bundle discharge unit sensor and DF main PWB (YC20)(1000-sheet finisher) 5. If the wiring is disconnected, shorted or grounded, replace the wiring. 6. Replace the DF eject release motor.
		DF bundle discharge unit sensor	1. Execute Finisher - Bundle Eject HP of U241 finisher switch check (see page 1-3-136). 2. Check that the sensor and its mounting board are correctly positioned. 3. Confirm that the wiring connector is firmly connected and, if necessary, connect the connector all the way in. DF bundle discharge unit sensor and DF main PWB (YC22)(4000-sheet finisher) DF bundle discharge unit sensor and DF main PWB (YC20)(1000-sheet finisher) 4. Replace the DF bundle discharge unit sensor.
		DF main PWB	Replace the DF main PWB (Refer to the service manual for the document finisher).

Code	Contents	Related parts	Check procedures/ corrective measures
8110	**DF shift motor 1 error** (4000-sheet finisher) DF shift sensor 1 won't turn on when it has travelled 160 mm after DF shift motor 1 is driven.	DF shift motor 1 [front]	1. Execute U240 Motor - Sort Test to check the finisher operation (see page 1-3-134). 2. Manipulate the front shift guide back and forth to check that it is smoothly operable. 3. Check that the drive from the motor reaches the front shift guide. 4. Confirm that the wiring connector is firmly connected and, if necessary, connect the connector all the way in. DF shift motor 1 and DF main PWB (YC14) 5. If the wiring is disconnected, shorted or grounded, replace the wiring. 6. Replace the DF shift motor 1
		DF shift sensor 1 [front]	1. Execute U241 Finisher - Shift Front HP to check the finisher switch (see page 1-3-136). 2. Check that the sensor and its mounting bracket are correctly positioned. 3. Confirm that the wiring connector is firmly connected and, if necessary, connect the connector all the way in. DF shift sensor 1 and DF main PWB (YC23) 4. Replace the DF shift sensor 1.
		DF main PWB	Replace the DF main PWB (Refer to the service manual for the document finisher).

Code	Contents	Related parts	Check procedures/ corrective measures
8120	**DF shift motor 2 error** (4000-sheet finisher) DF shift sensor 1 won't turn on when it has travelled 160 mm after DF shift motor 1 is driven.	DF shift motor 2 [rear]	1. Execute U240 Motor - Sort Test to check the finisher operation (see page 1-3-134). 2. Manipulate the rear shift guide back and forth to check it is smoothly operable. 3. Check that the drive from the motor reaches the rear shift guide. 4. Confirm that the wiring connector is firmly connected and, if necessary, connect the connector all the way in. DF shift motor 2 and DF main PWB (YC14) 5. If the wiring is disconnected, shorted or grounded, replace the wiring. 6. Replace the DF shift motor 2.
		DF shift set sensor 2 [rear]	1. Execute U241 Finisher - Shift Trail HP to check the finisher switch (see page 1-3-136). 2. Check that the sensor and its mounting bracket are correctly positioned. 3. Confirm that the wiring connector is firmly connected and, if necessary, connect the connector all the way in. DF shift sensor 2 and DF main PWB (YC23) 4. Replace the DF shift set sensor2.
		DF main PWB	Replace the DF main PWB (Refer to the service manual for the document finisher).

Code	Contents	Related parts	Check procedures/ corrective measures
8130	**DF shift release motor error** (4000-sheet finisher) When the DF shift release motor is driven, DF shift release sensor does not turn on within 1 s.	DF shift release motor	1. Check that cancelling the maintenance mode after executing U240 Motor - Sort for the finisher operation check lets the rear and forth cursors return to the home position (see page 1-3-134). 2. Manipulate the shift guide back and forth to check it is smoothly operable. 3. Check that the drive from the motor reaches the shift guide front and rear. 4. Confirm that the wiring connector is firmly connected and, if necessary, connect the connector all the way in. DF shift release motor and DF main PWB (YC23) 5. If the wiring is disconnected, shorted or grounded, replace the wiring. 6. Replace the DF shift release motor.
		DF shift release sensor	1. Execute U241 Finisher - Shift Unlock HP to check the finisher switch (see page 1-3-136). 2. Check that the sensor and its mounting bracket are correctly positioned. 3. Confirm that the wiring connector is firmly connected and, if necessary, connect the connector all the way in. DF shift release sensor and DF main PWB (YC23) 4. Replace the DF shift release sensor.
		DF main PWB	Replace the DF main PWB (Refer to the service manual for the document finisher).

Code	Contents	Related parts	Check procedures/ corrective measures
8140	**DF tray motor error 1** When the main tray has ascended, DF tray sensor 1 or DF tray upper surface sensor does not turn on within 20 s.	DF tray motor	1. Execute U240 Motor - Tray to check the finisher operation (see page 1-3-134). 2. Manipulate the main tray up and down to check it is smoothly operable. 3. Check that the drive from the motor reaches the main tray. 4. Confirm that the wiring connector is firmly connected and, if necessary, connect the connector all the way in. DF tray motor and DF Main PWB(YC16) (4000-sheet finisher) DF tray motor and DF Main PWB(YC14) (1000-sheet finisher) 5. If the wiring is disconnected, shorted or grounded, replace the wiring. 6. Replace the DF tray motor.
		DF tray sensor 1 DF tray upper surface sensor	1. Execute U241 Finisher - Tray U-Limit, Tray Top to check the finisher switch (see page 1-3-136). 2. Check that the sensor and its mounting bracket are correctly positioned. 3. Confirm that the wiring connector is firmly connected and, if necessary, connect the connector all the way in. DF tray sensor 1 and DF Main PWB(YC22) (4000-sheet finisher) DF tray upper surface sensor and DF Main PWB(YC21,YC13) (4000-sheet finisher) DF tray sensor 1 and DF main PWB (YC20) (1000-sheet finisher) DF tray upper surface sensor and DF main PWB (YC18) (1000-sheet finisher) 4. Replace the DF tray sensor 1 or DF tray upper surface sensor.
		DF main PWB	Replace the DF main PWB (Refer to the service manual for the document finisher).

Code	Contents	Related parts	Check procedures/ corrective measures
8150	**DF tray motor error 2** When the main tray has descended, DF tray sensor 1 or DF tray upper surface sensor does not turn off within 5 s.	DF tray motor	1. Execute U240 Motor - Tray to check the finisher operation (see page 1-3-134). 2. Manipulate the main tray up and down to check it is smoothly operable. 3. Check that the drive from the motor reaches the main tray. 4. Confirm that the wiring connector is firmly connected and, if necessary, connect the connector all the way in. DF tray motor and DF main PWB (YC16) (4000-sheet finisher) DF tray motor and DF main PWB (YC14) (1000-sheet finisher) 5. If the wiring is disconnected, shorted or grounded, replace the wiring. 6. Replace the DF tray motor.
		DF tray sensor 1 DF tray upper surface sensor	1. Execute U241 Finisher - Tray U-Limit, Tray Top to check the finisher switch (see page 1-3-136). 2. Check that the sensor and its mounting bracket are correctly positioned. 3. Confirm that the wiring connector is firmly connected and, if necessary, connect the connector all the way in. DF tray sensor 1 and DF main PWB (YC22) (4000-sheet finisher) DF tray upper surface sensor and DF main PWB (YC21,YC13) (4000-sheet finisher) DF tray sensor 1 and DF main PWB (YC20) (1000-sheet finisher) DF tray upper surface sensor and DF main PWB (YC18) (1000-sheet finisher) 4. Replace the DF tray sensor 1 or DF tray upper surface sensor.
		DF main PWB	Replace the DF main PWB (Refer to the service manual for the document finisher).

Code	Contents	Related parts	Check procedures/ corrective measures
8160	**DF tray motor error 3** When the main tray has descended, DF tray sensor 3 does not turn on within 20 s.	DF tray motor	1. Execute U240 Motor - Tray to check the finisher operation (see page 1-3-134). 2. Manipulate the main tray up and down to check it is smoothly operable. 3. Check that the drive from the motor reaches the main tray. 4. Confirm that the wiring connector is firmly connected and, if necessary, connect the connector all the way in. DF tray motor and DF main PWB (YC16) (4000-sheet finisher) DF tray motor and DF main PWB (YC14) (1000-sheet finisher) 5. If the wiring is disconnected, shorted or grounded, replace the wiring. 6. Replace the DF tray motor.
		DF tray sensor 4	1. Execute U241 Finisher - Tray Middle to check the finisher switch (see page 1-3-136). 2. Check that the sensor and its mounting bracket are correctly positioned. 3. Confirm that the wiring connector is firmly connected and, if necessary, connect the connector all the way in. DF tray sensor 4 and DF main PWB (YC23) (4000-sheet finisher) DF tray sensor 4 and DF main PWB (YC20) (1000-sheet finisher) 4. Replace the DF tray sensor 4.
		DF main PWB	Replace the DF main PWB (Refer to the service manual for the document finisher).

Code	Contents	Related parts	Check procedures/ corrective measures
8170	**DF side registration motor 1 error 1** When initial operation, DF side registration sensor 1 does not turn on within 3 s.	DF side registration motor 1	1. Execute U240 Motor - Width Test to check the finisher operation (see page 1-3-134). 2. Manipulate the front side registration guide to check it is smoothly operable. 3. Check that the drive from the motor reaches the front side registration guide. 4. Confirm that the wiring connector is firmly connected and, if necessary, connect the connector all the way in. DF side registration motor 1 and DF main PWB (YC15) (4000-sheet finisher) DF side registration motor 1 and DF main PWB (YC11) (1000-sheet finisher) 5. If the wiring is disconnected, shorted or grounded, replace the wiring. 6. Replace the DF side registration motor 1.
		DF side registration sensor 1	1. Execute U241 Finisher - Width Front to check the finisher switch (see page 1-3-136). 2. Check that the sensor and its mounting bracket are correctly positioned. 3. Confirm that the wiring connector is firmly connected and, if necessary, connect the connector all the way in. DF side registration sensor 1. and DF main PWB (YC22) (4000-sheet finisher) DF side registration sensor 1. and DF main PWB (YC20) (1000-sheet finisher) 4. Replace the DF side registration sensor 1.
		DF main PWB	Replace the DF main PWB (Refer to the service manual for the document finisher).

Code	Contents	Related parts	Check procedures/ corrective measures
8180	**DF side registration motor 1 error 2** JAM6810 (jam in front of width alignment) is detected twice.	DF side registration motor 1	1. Execute U240 Motor - Width Test to check the finisher operation (see page 1-3-134). 2. Manipulate the front side registration guide back and forth to check it is smoothly operable. 3. Check that the drive from the motor reaches the front side registration guide. 4. Confirm that the wiring connector is firmly connected and, if necessary, connect the connector all the way in. DF side registration motor 1 and DF main PWB (YC15) (4000-sheet finisher) DF side registration motor 1 and DF main PWB (YC11) (1000-sheet finisher) 5. If the wiring is disconnected, shorted or grounded, replace the wiring. 6. Replace the DF side registration motor 1.
		DF side registration sensor 1.	1. Execute U241 Finisher - Width Front to check the finisher switch (see page 1-3-136). 2. Check that the sensor and its mounting bracket are correctly positioned. 3. Confirm that the wiring connector is firmly connected and, if necessary, connect the connector all the way in. DF side registration sensor 1. and DF main PWB (YC22) (4000-sheet finisher) DF side registration sensor 1. and DF main PWB (YC20) (1000-sheet finisher) 4. If the wiring is disconnected, shorted or grounded, replace the wiring. 5. Replace the DF side registration sensor 1.
		DF main PWB	Replace the DF main PWB (Refer to the service manual for the document finisher).

Code	Contents	Related parts	Check procedures/ corrective measures
8190	**DF side registration motor 2 error 1** When initial operation, DF side registration sensor 2 does not turn on within 3 s.	DF side registration motor 2	1. Execute U240 Motor - Width Test to check the finisher operation (see page 1-3-134). 2. Manipulate the rear side registration guide back and forth to check it is smoothly operable. 3. Check that the drive from the motor reaches the rear side registration guide. 4. Confirm that the wiring connector is firmly connected and, if necessary, connect the connector all the way in. DF side registration motor 2 and DF main PWB (YC15) (4000-sheet finisher) DF side registration motor 2 and DF main PWB (YC11) (1000-sheet finisher) 5. If the wiring is disconnected, shorted or grounded, replace the wiring. 6. Replace the DF side registration motor 2.
		DF side registration sensor 2	1. Execute U241 Finisher - Width tail HP to check the finisher switch (see page 1-3-136). 2. Check that the sensor and its mounting bracket are correctly positioned. 3. Confirm that the wiring connector is firmly connected and, if necessary, connect the connector all the way in. DF side registration sensor 2 and DF main PWB (YC22) (4000-sheet finisher) DF side registration sensor 2 and DF main PWB (YC20) (1000-sheet finisher) 4. Replace the DF side registration sensor 2.
		DF main PWB	Replace the DF main PWB (Refer to the service manual for the document finisher).

Code	Contents	Related parts	Check procedures/ corrective measures
8200	**DF side registration motor 2 error 2** JAM6910 (jam in rear of width alignment) is detected twice.	DF side registration motor 2	1. Execute U240 Motor - Width Test to check the finisher operation (see page 1-3-134). 2. Manipulate the rear side registration guide back and forth to check it is smoothly operable. 3. Check that the drive from the motor reaches the rear side registration guide. 4. Confirm that the wiring connector is firmly connected and, if necessary, connect the connector all the way in. DF side registration motor 2 and DF main PWB (YC15) (4000-sheet finisher) DF side registration motor 2 and DF main PWB (YC11) (1000-sheet finisher) 5. If the wiring is disconnected, shorted or grounded, replace the wiring. 6. Replace the DF side registration motor 2.
		DF side registration sensor 2	1. Execute U241 Finisher - Width tail HP to check the finisher switch (see page 1-3-136). 2. Check that the sensor and its mounting bracket are correctly positioned. 3. Confirm that the wiring connector is firmly connected and, if necessary, connect the connector all the way in. DF side registration sensor 2 and DF main PWB (YC22) (4000-sheet finisher) DF side registration sensor 2 and DF main PWB (YC20) (1000-sheet finisher) 4. Replace the DF side registration sensor 2.
		DF main PWB	Replace the DF main PWB (Refer to the service manual for the document finisher).

Code	Contents	Related parts	Check procedures/ corrective measures
8210	**DF slide motor error** When initial operation, DF staple sensor does not turn on within 3 s.	DF slide motor	1. Execute U240 Motor - Staple Move to check the finisher operation (see page 1-3-134). 2. Manipulate the staple unit back and forth to check it is smoothly operable. 3. Check that the drive from the motor reaches the staple unit. 4. Confirm that the wiring connector is firmly connected and, if necessary, connect the connector all the way in. DF slide motor and DF main PWB (YC12) (4000-sheet finisher) DF slide motor and DF main PWB (YC10) (1000-sheet finisher) 5. If the wiring is disconnected, shorted or grounded, replace the wiring. 6. Replace the DF slide motor.
		DF staple sensor	1. Execute U241 Finisher - Width Staple HP to check the finisher switch (see page 1-3-136). 2. Check that the sensor and its mounting bracket are correctly positioned. 3. Confirm that the wiring connector is firmly connected and, if necessary, connect the connector all the way in. DF staple sensor and DF main PWB (YC22) (4000-sheet finisher) DF staple sensor and DF main PWB (YC20) (1000-sheet finisher) 4. If the wiring is disconnected, shorted or grounded, replace the wiring. 5. Replace the DF staple sensor.
		DF main PWB	Replace the DF main PWB (Refer to the service manual for the document finisher).

Code	Contents	Related parts	Check procedures/ corrective measures
8230	**DF staple motor error 1** Staple JAM (DF) has been detected twice in a row. (The second JAM detection condition fullfilled with the home position did not detected in 600 ms after the motor was driven.)	DF staple motor	1. Remove the staple unit and check that stapling is possible without a jam. 2. Confirm that the FFC wiring connector is not distorted and connect the FFC wiring all the way in. Staple unit and DF main PWB (YC17) (4000-sheet finisher) Staple unit and DF main PWB (YC11) (1000-sheet finisher) 3. If the wiring is disconnected, shorted or grounded, replace the wiring. 4. Replace the staple unit. (Refer to the service manual for the document finisher).
		DF staple sensor	Replace the staple unit.
		DF main PWB	Replace the DF main PWB (Refer to the service manual for the document finisher).

Code	Contents	Related parts	Check procedures/ corrective measures
8240	**DF staple motor error 2** Staple JAM (DF) has been detected twice in a row. (The second JAM detection condition fullfilled with a lock detection signal maintained 1 V for 500 ms continuously, while the stapler motor was driven.)	DF staple motor	1. Remove the staple unit and check that stapling is possible without a jam. 2. Confirm that the FFC wiring connector is not distorted and connect the FFC wiring all the way in. Staple unit and DF main PWB (YC17) (4000-sheet finisher) Staple unit and DF main PWB (YC11) (1000-sheet finisher) 3. If the wiring is disconnected, shorted or grounded, replace the wiring. 4. Replace the staple unit. (Refer to the service manual for the document finisher).
		DF main PWB	Replace the DF main PWB (Refer to the service manual for the document finisher).

Code	Contents	Related parts	Check procedures/ corrective measures
8300	**Center-folding unit communication error** (4000-sheet finisher) Communication with the center-folding unit is not possible.	CF unit set switch	1. Execute U241 Booklet - Set to check the finisher switch (see page 1-3-136). 2. Check that the switch and its mounting bracket are correctly positioned. 3. Confirm that the wiring connector is firmly connected and, if necessary, connect the connector all the way in. CF main PWB (YC7) and DF main PWB (YC9) 4. If the wiring is disconnected, shorted or grounded, replace the wiring. 5. Replace the CF unit set switch.
		CF main PWB	Replace the CF main PWB
		DF main PWB	Replace the DF main PWB (Refer to the service manual for the document finisher).
8310	**CF side registration motor 2 error** (4000-sheet finisher) When initial operation, CF side registration sensor 2 does not turn on within 1 s.	CF side registration motor 2	1. Execute Motor - Width Test of U240 finisher operation check (see page 1-3-134). 2. Manipulate the side registration upper guide back and forth to check it can smoothly move back and forth. 3. Check that the drive from the motor reaches the side registration upper guide. 4. Confirm that the wiring connector is firmly connected and, if necessary, connect the connector all the way in. CF side registration motor 2 and CF main PWB (YC10) 5. If the wiring is disconnected, shorted or grounded, replace the wiring. 6. Replace the CF side registration motor.
		CF side registration sensor 2	1. Execute U241 Booklet - Width Up HP to check the finisher switch (see page 1-3-136). 2. Check that the sensor and its mounting bracket are correctly positioned. 3. Confirm that the wiring connector is firmly connected and, if necessary, connect the connector all the way in. CF side registration sensor 2 and CF main PWB (YC20) 4. Replace the CF side registration sensor 2.
		CF main PWB	Replace the CF main PWB

Code	Contents	Related parts	Check procedures/ corrective measures
8320	**CF adjustment motor error** (4000-sheet finisher) When initial operation, CF adjustment sensor does not turn on within 2.5 s.	CF adjustment motor1,2	1. Execute U240 Motor - Bundle Up / Down to check the finisher operation (see page 1-3-134). 2. Manipulate the fold moving belt up and down to check it is smoothly operable. 3. Check that the drive from the motor reaches the fold moving belt. (Check if the belt is bent.) 4. Confirm that the wiring connector is firmly connected and, if necessary, connect the connector all the way in. CF adjustment motor 1,2 and CF main PWB (YC10) 5. If the wiring is disconnected, shorted or grounded, replace the wiring. 6. Replace the CF adjustment motor1,2.
		CF adjustment sensor1,2	1. Execute U241 Booklet - bundle Up / Down HP to check the finisher switch (see page 1-3-136). 2. Check that the sensor and its mounting bracket are correctly positioned. 3. Confirm that the wiring connector is firmly connected and, if necessary, connect the connector all the way in. CF adjustment sensor 1,2 and CF main PWB (YC20) 4. Replace the CF adjustment sensor1,2.
		CF main PWB	Replace the CF main PWB.

Code	Contents	Related parts	Check procedures/ corrective measures
8330	**CF blade motor error** (4000-sheet finisher) When initial operation, CF blade sensor does not turn on within 1500 ms.	CF blade motor	1. Execute U240 Booklet - Blade to check the finisher operation (see page 1-3-134). 2. Manipulate the fold blade up and down to check it is smoothly operable. 3. Check that the drive from the motor reaches the fold blade. 4. Confirm that the wiring connector is firmly connected and, if necessary, connect the connector all the way in. CF blade motor and CF main PWB (YC15) 5. If the wiring is disconnected, shorted or grounded, replace the wiring. 6. Replace the CF blade motor.
		CF blade sensor	1. Execute U241 Booklet - Blade HP to check the finisher switch (see page 1-3-136). 2. Check that the sensor and its mounting bracket are correctly positioned. 3. Confirm that the wiring connector is firmly connected and, if necessary, connect the connector all the way in. CF blade sensor and CF main PWB (YC20) 4. Replace the CF blade sensor.
		CF main PWB	Replace the CF main PWB
8340	**CF staple motor error 1** (4000-sheet finisher) Staple JAM (center-folding unit) has been detected twice in a row. (The second JAM detection condition fullfilled with the home position did not detected in 600 ms after the motor was driven.)	CF staple motor	1. Execute U240 Booklet - Staple to check the finisher operation (see page 1-3-134). 2. Manipulate the staple up and down check it is smoothly operable. 3. Check that the drive from the motor reaches the staple unit. 4. Confirm that the wiring connector is firmly connected and, if necessary, connect the connector all the way in. CF staple unit and CF main PWB (YC13) 5. If the wiring is disconnected, shorted or grounded, replace the wiring. 6. Replace the CF staple motor.
		CF staple sensor	Replace the CF staple unit.
		CF main PWB	Replace the CF main PWB.

Code	Contents	Related parts	Check procedures/ corrective measures
8350	**CF side registration motor 1 error** (4000-sheet finisher) When initial operation, CF side registration sensor 1 does not turn on within 1 s.	CF side registration motor 1	1. Execute U240 Booklet - Width Test to check the finisher operation (see page 1-3-134). 2. Manipulate the side registration lower guide back and forth to check it can smoothly operable. 3. Check that the drive from the motor reaches the side registration lower guide. 4. Confirm that the wiring connector is firmly connected and, if necessary, connect the connector all the way in. CF side registration motor 1 and CF main PWB (YC10) 5. If the wiring is disconnected, shorted or grounded, replace the wiring. 6. Replace the CF side registration motor 1.
		CF side registration sensor 1	1. Execute U241 Booklet - Width Down HP to check the finisher switch (see page 1-3-136). 2. Check that the sensor and its mounting bracket are correctly positioned. 3. Confirm that the wiring connector is firmly connected and, if necessary, connect the connector all the way in. CF side registration sensor 1 and CF main PWB (YC20) 4. Replace the CF side registration sensor 1.
		CF main PWB	Replace the CF main PWB

Code	Contents	Related parts	Check procedures/ corrective measures
8360	**CF main motor error** (4000-sheet finisher) During driving the motor, the lock signal is detected for 1 s continuously.	CF main motor	1. Execute U240 Booklet - Folding to check the finisher operation (see page 1-3-134). 2. Manipulate the conveying roller to check it can smoothly rotate. 3. Check that the drive from the motor reaches the conveying roller. 4. Confirm that the wiring connector is firmly connected and, if necessary, connect the connector all the way in. CF main motor and CF main PWB (YC16) 5. If the wiring is disconnected, shorted or grounded, replace the wiring. 6. Replace the CF main motor.
		CF main PWB	Replace the CF main PWB

Code	Contents	Related parts	Check procedures/ corrective measures
8410	**Punch slide motor error 1** The punch slide sensor won't turn On when home position has been moved by 30 mm.	Punch slide motor	1. Execute U240 Booklet - Punch Move to check the finisher operation (see page 1-3-134). 2. Manipulate the punch slide part of the punch unit back and forth to check it can smoothly move. 3. Check that the drive from the motor reaches punch area. 4. Confirm that the wiring connector is firmly connected and, if necessary, connect the connector all the way in. Punch slide motor and Punch PWB (YC3) 5. If the wiring is disconnected, shorted or grounded, replace the wiring. 6. Replace the punch slide motor.
		Punch slide sensor	1. Execute U241 Punch - Punch HP to check the finisher switch (see page 1-3-134). 2. Check that the sensor and its mounting bracket are correctly positioned. 3. Confirm that the wiring connector is firmly connected and, if necessary, connect the connector all the way in. Punch slide sensor and Punch PWB (YC6) 4. Replace the punch slide sensor.
		Punch PWB	1. Confirm that the wiring connector is firmly connected and, if necessary, connect the connector all the way in. Punch PWB (YC1) and DF main PWB (YC7) (4000-sheet finisher) Punch PWB (YC1) and DF main PWB (YC8) (1000-sheet finisher) 2. Replace the punch PWB.
		DF main PWB	Replace the DF main PWB

Code	Contents	Related parts	Check procedures/ corrective measures
8420	**Punch slide motor error 2** In detection of paper edges, the paper edge cannot be detected in 30 mm move.	Punch slide motor	1. Execute U240 Booklet - Punch Move to check the finisher operation (see page 1-3-134). 2. Manipulate the punch slide part of the punch unit back and forth to check it can smoothly move. 3. Check that the drive from the motor reaches punch part. 4. Confirm that the wiring connector is firmly connected and, if necessary, connect the connector all the way in. Punch slide motor and Punch PWB (YC3) 5. If the wiring is disconnected, shorted or grounded, replace the wiring. 6. Replace the punch slide motor.
		Punch paper edge sensor 1,2	1. Execute U241 Punch - Edge Face 1,2,3,4 to check the finisher switch (see page 1-3-136). 2. Check that the sensor and its mounting bracket are correctly positioned. 3. Confirm that the wiring connector is firmly connected and, if necessary, connect the connector all the way in. Punch paper edge sensor 1,2 and Punch PWB (YC5,YC7) 4. Replace the punch paper edge sensor 1,2.
		Punch PWB	1. Confirm that the wiring connector is firmly connected and, if necessary, connect the connector all the way in. Punch PWB (YC1) and DF main PWB (YC7) (4000-sheet finisher) Punch PWB (YC1) and DF main PWB (YC8) (1000-sheet finisher) 2. Replace the Punch PWB.
		DF main PWB	Replace the DF main PWB

Code	Contents	Related parts	Check procedures/ corrective measures
8430	**Punch unit communication error** Communication with the punch unit is not possible.	Punch PWB	1. Confirm that the wiring connector is firmly connected and, if necessary, connect the connector all the way in. Punch PWB (YC1) and DF main PWB (YC7) (4000-sheet finisher) Punch PWB (YC1) and DF main PWB (YC8) (1000-sheet finisher) 2. If the wiring is disconnected, shorted or grounded, replace the wiring. 3. Replace the Punch PWB.
		DF main PWB	Replace the DF main PWB
8500	**Mailbox communication error** (4000-sheet finisher) Communication failed to be established after the mailbox was hooked up.	MB main PWB	1. Turn the main power switch off and after 5 seconds, turn it on. 2. Confirm that the wiring connector is firmly connected and, if necessary, connect the connector all the way in. MB main PWB (YC3) and DF main PWB (YC6) 3. If the wiring is disconnected, shorted or grounded, replace the wiring. 4. Replace the MB main PWB
		DF main PWB	Replace the DF main PWB
8510	**MB conveying motor error 1** (4000-sheet finisher) When initial operation, MB home position sensor does not turn on within 5 s.	MB conveying motor	1. If the transfer roller won't rotate smoothly, repair its mechanism. 2. Confirm that the wiring connector is firmly connected and, if necessary, connect the connector all the way in. MB conveying motor and MB main PWB (YC5) 3. If the wiring is disconnected, shorted or grounded, replace the wiring. 4. Replace the MB conveying motor.
		MB home position sensor	1. Execute U241 Mail Box - Motor HP to check the finisher switch (see page 1-3-136). 2. Check that the sensor and its mounting bracket are correctly positioned. 3. Confirm that the wiring connector is firmly connected and, if necessary, connect the connector all the way in. MB home position sensor and MB main PWB (YC2) 4. Replace the MB home position sensor.
		MB main PWB	Replace the MB main PWB

Code	Contents	Related parts	Check procedures/ corrective measures
8520	**MB conveying motor error 2** (4000-sheet finisher) When standby operation, MB home position sensor does not turn off within 1 s.	MB conveying motor	1. Execute Mail Box - Conv of U240 finisher operation check (see page 1-3-134). 2. Manipulate the conveying roller of the mailbox to check it can smoothly rotate. 3. Check that the drive from the motor reaches the conveying roller. 4. Confirm that the wiring connector is firmly connected and, if necessary, connect the connector all the way in. MB conveying motor and MB main PWB (YC5) 5. If the wiring is disconnected, shorted or grounded, replace the wiring. 6. Replace the MB conveying motor.
		MB home position sensor	1. Execute U241 Mail Box - Motor HP to check the finisher switch (see page 1-3-136). 2. Check that the sensor and its mounting bracket are correctly positioned. 3. Confirm that the wiring connector is firmly connected and, if necessary, connect the connector all the way in. MB home position sensor and MB main PWB (YC2) 4. Replace the MB home position sensor.
		MB main PWB	Replace the MB main PWB

Code	Contents	Related parts	Check procedures/ corrective measures
8800	**Document finisher main program error** Document finisher main program error at power up.	DF main PWB	1. Confirm that the wiring connector is firmly connected and, if necessary, connect the connector all the way in. DF main PWB (YC4) and Engine PWB (YC18) (4000-sheet finisher) DF main PWB (YC7) and Engine PWB (YC18) (1000-sheet finisher) 2. If the wiring is disconnected, shorted or grounded, replace the wiring. 3. Replace the DF main PWB
		Engine PWB	1. Check the engine software and upgrade to the latest, if necessary. 2. Replace the engine PWB (see page 1-5-80).
8900	**Document finisher backup error** Read and write data does not match 3 times in succession.	DF main PWB	1. Confirm that the wiring connector is firmly connected and, if necessary, connect the connector all the way in. DF main PWB (YC4) and Engine PWB (YC18) (4000-sheet finisher) DF main PWB (YC7) and Engine PWB (YC18) (1000-sheet finisher) 2. If the wiring is disconnected, shorted or grounded, replace the wiring. 3. Replace the DF main PWB
8930	**Center-folding unit backup error** (4000-sheet finisher) Read and write data does not match 3 times in succession.	CF main PWB	1. Confirm that the wiring connector is firmly connected and, if necessary, connect the connector all the way in. CF main PWB (YC7) and DF main PWB (YC9) 2. If the wiring is disconnected, shorted or grounded, replace the wiring. 3. Install the EEPROM properly. 4. Replace the CF main PWB

Code	Contents	Related parts	Check procedures/ corrective measures
9000	**Document processor communication error** Communication with the document processor is not possible.	DP main PWB	1. Check that the versions of the main unit firmware and the DP firmware are identical. 2. Confirm that the wiring connector is firmly connected and, if necessary, connect the connector all the way in. DP main PWB(YC1) and ISC PWB(YC12) ISC PWB (YC3) and Main PWB (YC11) 3. If the wiring is disconnected, shorted or grounded, replace the wiring. 4. Replace the DP main PWB
		ISC PWB	Replace the ISC PWB.
9010	**Coin vender communication error** A communication error from coin vender is detected 10 times in succession.	U206 setting	Set maintenance mode U206 to off when a coin vender is not installed (see page 1-3-124).
		Coin vender control PWB	1. Confirm that the wiring connector is firmly connected and, if necessary, connect the connector all the way in. Coin vender control PWB and Engine PWB (YC23) 2. If the wiring is disconnected, shorted or grounded, replace the wiring. 3. Replace the Coin vender control PWB.
		Engine PWB	1. Check the engine software and upgrade to the latest, if necessary. 2. Replace the engine PWB (see page 1-5-80).

Code	Contents	Related parts	Check procedures/ corrective measures
9040	**DP lift motor going up error** When the DP lift motor is driven, DP lift sensor 1 does not turn on within 1500 pulse. (Three recovery times.) The above has been detected 5 times. * : The number of detection should be weighted with one for the rise at job start and two for the irregular rise during transpoting. The accumulated number must be cleared at completion of a normal rise. The default threshold is 5.	DP lift motor	1. Execute U906 Separating Operation Release (see page 1-3-223). 2. Execute U243 Lift Motor to check the DP motor operation (see page 1-3-139). 3. Check that the original document lift guide can move upwards. 4. Confirm that the wiring connector is firmly connected and, if necessary, connect the connector all the way in. DP lift motor and DP MAIN PWB (YC5) 5. If the wiring is disconnected, shorted or grounded, replace the wiring. 6. Replace the DP lift motor.
		DP lift sensor 1	1. Execute U244 LIFT L-Limit to check DP switch (see page 1-3-140). 2. Check that the sensor and its mounting bracket are correctly positioned. 3. Confirm that the wiring connector is firmly connected and, if necessary, connect the connector all the way in. DP lift sensor 1 and DP Main PWB (YC4) 4. Replace the DP lift sensor 1.
		DP Main PWB	Replace the DP main PWB

Code	Contents	Related parts	Check procedures/ corrective measures
9050	**DP lift motor going down error** When the DP lift motor is driven, DP lift sensor 2 does not turn on within 1500 pulse. (Three recovery times.) The above has been detected 5 times.	DP lift motor	1. Execute U906 Separating Operation Release (see page 1-3-223). 2. Execute U243 Lift Motor to check the DP motor operation (see page 1-3-139). 3. Check that the original document lift guide can move downwards. 4. Confirm that the wiring connector is firmly connected and, if necessary, connect the connector all the way in. DP lift motor and DP main PWB (YC5) If the wiring is disconnected, shorted or grounded, replace the wiring. 5. Replace the DP lift motor.
		DP lift sensor 2	1. Execute U244 LIFT L-Limit to check DP switch (see page 1-3-140). 2. Confirm that the DP lift sensor 2 has been firmly fitted. 3. Confirm that the wiring connector is firmly connected and, if necessary, connect the connector all the way in. DP lift sensor 2 and DP main PWB (YC2) 4. Replace the DP lift sensor2.
		DP main PWB	Replace the DP main PWB
9060	**DP EEPROM error** Mismatch of reading data from two locations occurs 3 times successively. Mismatch between writing data and reading data occurs 3 times successively.	DP main PWB	1. Execute U906 Separating Operation Release (see page 1-3-223). 2. Confirm that the EEPROM has been properly installed. 3. Replace the DP main PWB
		Device damage of EEPROM	Contact the Service Support.
9070	**Communication error between DP and SHD** A communication error is detected.	DP SHD PWB	1. Execute U906 Separating Operation Release (see page 1-3-223). 2. Confirm that the wiring connector is firmly connected and, if necessary, connect the connector all the way in. DP SHD PWB (YC1) and DP main PWB (YC10) 3. If the wiring is disconnected, shorted or grounded, replace the wiring. 4. Replace the DP SHD PWB.

Code	Contents	Related parts	Check procedures/ corrective measures
9080	**LED fault detection** A block is existent below a peak which was obtained by activating the LEDs in the four CIS blocks at power on, which is less than 80hex.	DP CIS	1. Execute CIS automatic original document alignment by U411 (see page 1-3-173). 2. Confirm that the wiring connector is firmly connected and, if necessary, connect the connector all the way in. CIS and DP SHD PWB (YC2) DP SHD PWB (YC1) and DP main PWB (YC10) 3. If the wiring is disconnected, shorted or grounded, replace the wiring. 4. Replace the CIS and execute U411.
		DP SHD PWB	Replace the DP SHD PWB.
9100	**Coin vender control PWB error** Communication error has been detected at the coin mec of the coin vender control PWB.	Coin vender control PWB	Replace the coin mec.
9110	**Coin vender rejector error** Communication error has been detected in connection with the coin mec and the rejector.	Rejector	1. Check that the rejector is firmly installed and, if not, install firmly. 2. Replace the rejector.
9120	**Sensor error in coin vender change (Yen 10)** Change is empty despite change is enough.	Coin jam in the change tube	Check visually and remedy.
		Contact in the connector	Check the connection of the empty change sensor.
		Change empty sensor	Replace the coin mec.
		Coin vender control PWB	Replace the coin mec.
9130	**Sensor error in coin vender change (Yen 50)** Change is empty despite change is enough.	Coin jam in the change tube	Check visually and remedy.
		Contact in the connector	Check the connection of the empty change sensor.
		Change empty sensor	Replace the coin mec.
		Coin vender control PWB	Replace the coin mec.

Code	Contents	Related parts	Check procedures/ corrective measures
9140	**Sensor error in coin vender change (Yen 100)** Change is empty despite change is enough.	Coin jam in the change tube	Check visually and remedy.
		Contact in the connector	Check the connection of the empty change sensor.
		Change empty sensor	Replace the coin mec.
		Coin vender control PWB	Replace the coin mec.
9150	**Sensor error in coin vender change (Yen 500)** Change is empty despite change is enough.	Change tube	Check no exchange jam is observed at the outlet and, if necessary, repair it.
		Contact in the connector	Check the connection of the empty change sensor.
		Change empty sensor	Replace the coin mec.
		Coin vender control PWB	Replace the coin mec.
9160	**Coin vender pay-out error** Coin is paid out despite the pay-out motor is determined not active.	Pay-out motor	Replace the coin mec.
9170	**Coin vender pay-out sensor error** Coin is paid out despite the pay-out motor is determined not active.	Pay-out area	Check no exchange jam is observed at the outlet and, if necessary, repair it.
		Pay-out motor	Replace the coin mec.
		Pay-out sensor	Replace the coin mec.
9500	**ISC PWB error A**	Main PWB ISC PWB	1. Reinsert the connector if its connection is loose. Main PWB (YC25) and ISC PWB (YC4) 2. Replace the main PWB (see page 1-5-72). 3. Replace the ISC PWB 4. Contact the Service Support.
9510	**ISC PWB error B**	Main PWB DP SHD PWB	1. Reinsert the connector if its connection is loose. DP relay PWB (YC2) and DP SHD PWB (YC3) 2. Replace the main PWB (see page 1-5-72). 3. Replace the DP SHD PWB. 4. Contact the Service Support.

Code	Contents	Related parts	Check procedures/ corrective measures
9520	**ISC PWB error C**	Main PWB ISC PWB	1. Reinsert the connector if it its connection is loose. Main PWB (YC25) and ISC PWB (YC4) 2. Replace the main PWB (see page 1-5-72). 3. Replace the ISC main PWB 4. Contact the Service Support.
9530 **9540**	**Machine recovery error** The machine may not be recovered or may have trouble in its function with changes of the internal data when replacing some the parts at the same time.	PWBs	1. Reattach the parts below in case of replacing 2 or more of them at the same time. Affected parts : Memory, HDD, PWBs * : Do not replace 2 or more of the parts at the same time * : And also, do not execute the following works when replacing the above parts. Do not replace the drum unit or the developing unit. Do not replace the drum unit with the one color for other one in the same machine.
9940	**Confidential document guard uninstalled error** The confidential document guard PWB is removed while the confidential document guard PWB is valid.	Confidential document guard PWB	1. Check that the confidential document guard PWB is firmly installed and, if not, install firmly. 2. Replace the confidential document guard PW.
9950	**Confidential document guard PWB error** FPGA configuration error CPU version information error This is caused when the PWB of a double-side scanning DP is connected, the confidential guard PWB is inserted, and the harness is not correctly connected.	Confidential document guard PWB	1. Replace the confidential document guard PW. 2. Replace the main PWB (see page 1-5-72).

Code	Contents	Related parts	Check procedures/ corrective measures
F000	**Communication error between main PWB and operation PWB**	Main PWB	1. Turn the main power swtch off and after 5 seconds, then turn power on. 2. Check that the wirings and connetors between the main circuit PWB and the operation circuit PWB and between the main circuit PWB and the HDD are normal. Main PWB (YC12,YC17,YC30) and Operation PWB (YC1,YC2,YC3) 3. Check that the DDR memories in the main circuit PWB are well conducted and, if not, replace. 4. Execute U024 to initialize (FULL) the HDD (see page 1-3-32). 5. Execute U021 to initialize memory. (see page 1-3-31) 6. Replace the Main PWB. 7. Copy the log File saved in the HDD by U964 in USB memory and contact the service support (see page 1-3-234).
		Operation PWB	Replace the operation PWB (see page 1-5-90).
F010	**Main PWB checksum error**	Main PWB	1. Turn the main power swtch off and after 5 seconds, then turn power on. 2. If not corrected, replace the main PWB (see page 1-5-72).
F020 **F021** **F022** **F023**	**System memory error** Error occurs at start-up read/ write check of DIMM	Main PWB	1. Turn the main power swtch off and after 5 seconds, then turn power on. 2. If not corrected, replace the main PWB (see page 1-5-72).

Code	Contents	Related parts	Check procedures/ corrective measures
F040	**Communication error between Main PWB and Print engine**	Main PWB	1. Turn the main power swtch off and after 5 seconds, then turn power on. 2. Repair or replace the wire from the engine PWB, that may be grounded. (Check short-circuit between 5V and 3.3V.) 3. Check that the FFC wire connecting between the main PWB (YC3) and the engine PWB (YC46) is normal and, if necessary, re-insert.Or, replace the FFC wire. 4. If not corrected, replace the main PWB (see page 1-5-72).
		Engine PWB	1. Check the engine software and upgrade to the latest, if necessary. 2. Replace the engine PWB (see page 1-5-80).
		HDD	Replace the HDD (see page 1-5-119).
F041	**Communication error between Main PWB and Scanner engine**	Main PWB	1. Turn the main power swtch off and after 5 seconds, then turn power on. 2. Check that the wires between the main PWB and the ISC PWB are normal. 3. If not corrected, replace the main PWB (see page 1-5-72).
		ISC PWB	Replace the ISC PWB.
F050	**Print engine ROM check-sum error**	Engine software	Install the latest engine software.
		Engine PWB	1. Turn the main power swtch off and after 5 seconds, then turn power on. 2. Confirm that the EEPROM has been properly installed. 3. If not corrected, Replace the engine PWB (see page 1-5-80).
F051	**Scanner engine ROM checksum error**	Scanner software	Install the latest scanner software.
		ISC PWB	1. Turn the main power swtch off and after 5 seconds, then turn power on. 2. Confirm that the EEPROM has been properly installed. 3. If not corrected, Replace the ISC PWB.
F278	**Power supply in drive sys-tem error**	The main power switch was turned off before the power switch is pressed. Shutdown due to a power failure	Turn the main power swtch off and after 5 seconds, then turn power on. (Before turning power off, verify that the power key has been pressed and the power indicator has gone off, then switch the main power switch.)

(3) System Error (Fxxxx) Outline

The document is subscribed to describe the outline of the factors of the Fxxx errors that are not described in the
service manual. Please utilize it to refer to checking the factors.
Please utilize it as the measures when the system is not recovered after power off/on
or it frequently occurs.
It may be from the hardware factor while the error (Fxxx) is indicated.
Please initially check the following.

Check the DDR2 memory and neighboring parts:
Check the contact of YS1 or YS2 with the memory. Replace the memory if the error repeats.
Check the HDD if the error repeats after replacing the main board.
Take care, however, of handling the data when formatting or replacing the HDD.
Check the HDD : Replace the HDD if the error repeats after formatting the HDD.

No.	Content	Check procedure & check point	Team	Remark 1	Remark 2
-	Lock-up at Welcome display (The display unchages after 60 seconds or more)	1) Check connection of the harness (Panel to Main board), (Main board to HDD) and connectors and check function. 2) Check contact of the DDR memory by detaching and reattaching. and check function. replace it if available and check function. 3) Format the HDD and check function. (U024 FULL formatting) 4) Execute the U021Memory initializing to initialize the controller backup memory and check function. 5) Replace the panel board and check function. 6) Replace the main board and check function. 7) Retrieve the USBLOG and contact the Service Administrative Division.	PSO/GUI	*User data and installed software is deleted if executing the U024. Reinstallation is required.	
F000	CF000 appears in 60 seconds after the Welcome display continues Panel－Main board communication error Panel core－Main core communication error	1) Check connection of the harness (Panel to Main board), (Main board to HDD) and connectors and check function. 2) Check contact of the DDR memory by detaching and reattaching. and check function. replace it if available and check function. 3) Format the HDD and check function. (U024 FULL formatting) 4) Execute the U021 Memory initializing to initialize the controller backup memory and check function. 5) Replace the main board and check function. 6) Replace the Panel board and check function. 7) Retrieve the USBLOG and contact the Service Administrative Division.	PSO/GUI/OS/BMC		[Main-Panel Interface] Main board:YC12 Panel board:YC10
F12X	An error is detected at the Scan control section	1) Check connection of the harness (Scan/DP - Main board) and connectors and check function. 2) Format the HDD and check function. (U024 FULL formatting) 3) Execute the U021 Memory initializing to initialize the controller backup memory and check function. 4) Replace the Scan/DP board and check function. 5) Replace the main board and check function. 6) Retrieve the USBLOG and contact the Service Administrative Division.	Scanner/InputRIP		[Main-Scan Interface] Main board: YC11,YC25 ISC board: YC3,YC4 [Main-DP relay Interface] (Check if the boards are firmly connected via the board-to-board connector.) Main board:YC10 DP relay board:YC22
F13X	An error is detected at the Panel control section	1) Check connection of the harness (Panel - Main board) and connectors and check function. 2) Format the HDD and check function. (U024 FULL formatting) 3) Execute the U021 Memory initializing to initialize the controller backup memory and check function. 4) Replace the panel board and check function. 5) Replace the main board and check function. 6) Retrieve the USBLOG and contact the Service Administrative Division.	PSO/GUI		[Main-Panel Interface] Main board:YC6,YC12 Panel board:YC10,YC17
F14X	An error is detected at the FAX control section	1) Check connection of the harness (FAX - Main board) and connectors and check function. 2) Format the HDD and check function. (U024 FULL formatting) 3) Execute the U021 Memory initializing to initialize the controller backup memory and check function. 4) Execute the U671 Clear FAX back up data (FAX DIMM clear) and check function. (Take cae of the received data since it is cleared) 5) Replace the FAX_DIMM and check function. 6) Replace the FAX board and check function. 7) Replace the main board and check function. 8) Retrieve the USBLOG and contact the Service Administrative Division.	Job/Fax/Service		[Main-KUIO Interface] Main board:YC8,YC9 KUIO board:YC3,YC4
F15X	An error is detected at the authentication device control section	1) Check connection of the harness (Authentication device - Main board) and connectors and check function. 2) Format the HDD and check function. (U024 FULL formatting) 3) Execute the U021 Memory initializing to initialize the controller backup memory and check function. 4) Replace the main board and check function. 5) Replace the HDD and check function. 6) Retrieve the USBLOG and contact the Service Administrative Division.	SSM/PRCM/RPG/DCM/ESM/Entity	Authentication device: Card Reader, etc.	[Main Interface] Main board: YC21,YC22,YC26
F17X	An error is detected at the print data control section	1) Format the HDD and check function. (U024 FULL formatting) 2) Execute the U021 Memory initializing to initialize the controller backup memory and check function. 3) Replace the main board and check function. 4) Replace the HDD and check function. 5) Retrieve the USBLOG and contact the Service Administrative Division.	OS/BMC		-
F18X	An error is detected at the Video control secion	1) Check connection of the harness (Engine - Main board) and connectors and check function. 2) Format the HDD and check function. (U024 FULL formatting) 3) Execute the U021 Memory initializing to initialize the controller backup memory and check function. 4) Replace the engine board and check function. 5) Replace the main board and check function. 6) Retrieve the USBLOG and contact the Service Administrative Division.	PrintSys/GICL		[Main⇔ENGINE Interface] Main board:YC43 Engine board:YC46 or YC50
F1CX	An error is detected at the File System management section	1) Format the HDD and check function. (U024 FULL formatting) 2) Execute the U021 Memory initializing to initialize the controller backup memory and check function. 3) Replace the main board and check function. 4) Replace the HDD and check function. 5) Retrieve the USBLOG and contact the Service Administrative Division.	OS/BMC	*The F1C4 error appears with the HDD security kit at work.	-
F1DX	An error is detected at the Image memory management section	1) Format the HDD and check function. (U024 FULL formatting) 2) Execute the U021 Memory initializing to initialize the controller backup memory and check function. 3) Replace the main board and check function. 4) Replace the HDD and check function. 5) Retrieve the USBLOG and contact the Service Administrative Division.	OS/BMC	*The F1D4 error is RAM allocation error. 1Check it with the U340 2Initialize the setting valued with the U021	-

No.	Content	Check procedure & check point	Team	Remark 1	Remark 2
F21X F22X F23X	An error is detected at the Image processing section	1) Check contact of the DDR memory and check function. 2) Format the HDD and check function. (U024 FULL formatting) 3) Execute the U021 Memory initializing to initialize the controller backup memory and check function. 4) Replace the main board and check function. 5) Replace the HDD and check function. 6) Retrieve the USBLOG and contact the Service Administrative Division.	PrintSys/GICL		[DDR2 memory contact check] Main board:YS1 or YS3 A certain part of the memory be faulty. The frequency of faiure occurrence is dependent on the frequency of access to the faulty bit. The ASIC may be faulty if the memory is not sensitive.
F24X	An error is detected at the System management section	1) Check contact of the DDR memory and check function. 2) Format the HDD and check function. (U024 FULL formatting) 3) Execute the U021 Memory initializing to initialize the controller backup memory and check function. 4) Replace the main board and check function. 5) Replace the HDD and check function. 6) Retrieve the USBLOG and contact the Service Administrative Division.	SSM/PRCM/RPG/DCM/ESM/Entity	*The F248 eror is printer process error. if it repeats with a certain print data, retrieve the capture data and USBLOG.	[DDR2 memory contact check] Main board:YS1 or YS3 A certain part of the memory be faulty. The frequency of failure occurrence is dependent on the frequency of access to the faulty bit. The ASIC may be faulty if the memory is not sensitive.
F25X	An error is detected at the Network management section	1) Format the HDD and check function. (U024 FULL formatting) 2) Execute the U021 Memory initializing to initialize the controller backup memory and check function. 3) Replace the main board and check function. 4) Retrieve the USBLOG and contact the Service Administratuve Division. (or retrieve the packet capture data depending on the reult of analysis)	Network	*This may be owing to the users network environment.	-
F26X F27X F28X F29X F2AX	An error is detected at the System management section	1) Format the HDD and check function. (U024 FULL formatting) 2) Execute the U021 Memory initializing to initialize the controller backup memory and check function. 3) Replace the main board and check function. 4) Replace the HDD and check function. 5) Retrieve the USBLOG and contact the Service Administrative Division.	SSM/PRCM/RPG/DCM/ESM/Entity/KSF		-
F33X	An error is detected at the Scan management section	1) Check connection of the harness (Scan/DP board - main board) and connectors and check function. 2) Format the HDD and check function. (U024 FULL formatting) 3) Execute the U021 Memory initializing to initialize the controller backup memory and check function. 4) Replace the Scan/DP board and check function. 5) Replace the main board and check function. 6) Retrieve the USBLOG and contact the Service Administrative Division.	Scanner/InputRIP		Main board: YC11,YC25 ISC board: YC3,YC4 [Main-DP relay Interface] (Check if the boards are firmly connected via the board-to-board connector.) Main board:YC10 DP relay board:YC22
F34X	An error is detected at the Panel management section	1) Format the HDD and check function. (U024 FULL formatting) 2) Execute the U021 Memory initializing to initialize the controller backup memory and check function. 3) Replace the main board and check function. 4) Retrieve the USBLOG and contact the Service Administrative Division.	PSO/GUI		[Main-Panel Interface] Main board:YC6,YC12 Panel board:YC10,YC17
F35X	An error is detected at the Print control section	1) Format the HDD and check function. (U024 FULL formatting) 2) Execute the U021 Memory initializing to initialize the controller backup memory and check function. 3) Replace the main board and check function. 4) Replace the HDD and check function. 5) Retrieve the USBLOG and contact the Service Administrative Division.	PrintSys/GICL		-
F36X	An error is detected at the Print management section	1) Format the HDD and check function. (U024 FULL formatting) 2) Execute the U021 Memory initializing to initialize the controller backup memory and check function. 3) Replace the main board and check function. 4) Replace the HDD and check function. 5) Retrieve the USBLOG and contact the Service Administrative Division.	OS/BMC		-
F37X	An error is detected at the FAX management section	1) Format the HDD and check function. (U024 FULL formatting) 2) Execute the U021 Memory initializing to initialize the controller backup memory and check function. 3) Execute the U671 Clear FAX back up data (FAX DIMM clear) and check function. (Take cae of the received data since it is cleared) 4) Replace the FAX_DIMM and check function. 5) Replace the main board and check function. 6) Replace the HDD and check function. 7) Retrieve the USBLOG and contact the Service Administrative Division.	Job/Fax/Service		[FAX DIMM contact check] Main board: YC5
F38X	An error is detected at the Authentication/permit management section	1) Format the HDD and check function. (U024 FULL formatting) 2) Execute the U021 Memory initializing to initialize the controller backup memory and check function. 3) Replace the main board and check function. 4) Replace the HDD and check function. 5) Retrieve the USBLOG and contact the Service Administrative Division.	SSM/PRCM/RPG/DCM/ESM/Entity		-
F3AX F3BX F3CX F3DX F3EX F3FX F40X F41X F42X F43X F44X F45X	An error is detected at the Entity management section	1) Format the HDD and check function. (U024 FULL formatting) 2) Execute the U021 Memory initializing to initialize the controller backup memory and check function. 3) Replace the main board and check function. 4) Replace the HDD and check function. 5) Retrieve the USBLOG and contact the Service Administrative Division.	SSM/PRCM/RPG/DCM/ESM/Entity		-

No.	Content	Check procedure & check point	Team	Remark 1	Remark 2
F46X	An error is detected at the Print image process section	1) Replace the main board and check function. 2) Retrieve the USBLOG (or retrieve the print capture data by case)	PrintRIP/ Color	*The F46F is printer process error. if it repeats with a certain print data, retrieve the capture data and USBLOG.	-
F47X F48X F49X	An error is detected at the Image edit process control section	1) Format the HDD and check function. (U024 FULL formatting) 2) Execute the U021 Memory initializing to initialize the controller backup memory and check function. 3) Replace the main board and check function. 4) Replace the HDD and check function. 5) Retrieve the USBLOG and contact the Service Administrative Division.	Job/Fax/ Service/In putRIP		-
F4AX F4CX	An error is detected at the Print image process section	1) Format the HDD and check function. (U024 FULL formatting) 2) Execute the U021 Memory initializing to initialize the controller backup memory and check function. 3) Replace the main board and check function. 4) Replace the HDD and check function. 5) Retrieve the USBLOG and contact the Service Administrative Division.	PrintSys/ GICL		-
F4DX F4EX	An error is detected at the Entity control section	1) Format the HDD and check function. (U024 FULL formatting) 2) Execute the U021 Memory initializing to initialize the controller backup memory and check function. 3) Replace the main board and check function. 4) Replace the HDD and check function. 5) Retrieve the USBLOG and contact the Service Administrative Division.	SSM/PRC M/RPG/D CM/ESM/ Entity		-
F4FX	An error is detected at the Job control section	1) Format the HDD and check function. (U024 FULL formatting) 2) Execute the U021 Memory initializing to initialize the controller backup memory and check function. 3) Replace the main board and check function. 4) Replace the HDD and check function. 5) Retrieve the USBLOG and contact the Service Administrative Division.	Job/Fax/ Service		-
F50X	An error is detected at the FAX control section	1) Format the HDD and check function. (U024 FULL formatting) 2) Execute the U021 Memory initializing to initialize the controller backup memory and check function. 3) Replace the main board and check function. 4) Replace the HDD and check function. 5) Retrieve the USBLOG and contact the Service Administrative Division.	Job/Fax/ Service		-
F51X F52X F53X F55X F56X F57X	An error is detected at the Job execution section	1) Format the HDD and check function. (U024 FULL formatting) 2) Execute the U021 Memory initializing to initialize the controller backup memory and check function. 3) Replace the main board and check function. 4) Replace the HDD and check function. 5) Retrieve the USBLOG and contact the Service Administrative Division.	Job/Fax/ Service		-
F58X F59X F5AX F5BX F5CX F5DX F5EX	An error is detected at the Service management section	1) Format the HDD and check function. (U024 FULL formatting) 2) Execute the U021 Memory initializing to initialize the controller backup memory and check function. 3) Replace the main board and check function. 4) Replace the HDD and check function. 5) Retrieve the USBLOG and contact the Service Administrative Division.	Job/Fax/ Service		-
F5FX	An error is detected at the Service execution section	1) Format the HDD and check function. (U024 FULL formatting) 2) Execute the U021 Memory initializing to initialize the controller backup memory and check function. 3) Replace the main board and check function. 4) Replace the HDD and check function. 5) Retrieve the USBLOG and contact the Service Administrative Division.	Job/Fax/ Service		-
F60X	An error is detected at the Maintenance mode management section	1) Format the HDD and check function. (U024 FULL formatting) 2) Execute the U021 Memory initializing to initialize the controller backup memory and check function. 3) Replace the main board and check function. 4) Replace the HDD and check function. 5) Retrieve the USBLOG and contact the Service Administrative Division.	SSM/PRC M/RPG/D CM/ESM/ Entity		-
F61X	An error is detected at the Report compiling section	1) Format the HDD and check function. (U024 FULL formatting) 2) Execute the U021 Memory initializing to initialize the controller backup memory and check function. 3) Replace the main board and check function. 4) Replace the HDD and check function. 5) Retrieve the USBLOG and contact the Service Administrative Division.	SSM/PRC M/RPG/D CM/ESM/ Entity		-
F62X	An error is detected at the Service execution section	1) Format the HDD and check function. (U024 FULL formatting) 2) Execute the U021 Memory initializing to initialize the controller backup memory and check function. 3) Replace the main board and check function. 4) Replace the HDD and check function. 5) Retrieve the USBLOG and contact the Service Administrative Division.	Job/Fax/ Service		-
F63X	An error is detected at the Device control section	1) Format the HDD and check function. (U024 FULL formatting) 2) Execute the U021 Memory initializing to initialize the controller backup memory and check function. 3) Replace the main board and check function. 4) Replace the HDD and check function. 5) Retrieve the USBLOG and contact the Service Administrative Division.	OS/BMC		-

No.	Content	Check procedure & check point	Team	Remark 1	Remark 2
F64X F65X F66X F67X	An error is detected at the Print image process section	1) Format the HDD and check function. (U024 FULL formatting) 2) Execute the U021 Memory initializing to initialize the controller backup memory and check function. 3) Replace the main board and check function. 4) Replace the HDD and check function. 5) Retrieve the USBLOG and contact the Service Administrative Division.	PrintRIP/ Color		-
F68X	An error is detected at the Storage device control section	1) Format the HDD and check function. (U024 FULL formatting) 2) Execute the U021 Memory initializing to initialize the controller backup memory and check function. 3) Replace the main board and check function. 4) Replace the HDD and check function. 5) Retrieve the USBLOG and contact the Service Administrative Division.	OS/BMC	*F684 is Overwrite error with the HDD security kit	Please replace the FAX DIMM at the time of F684 occurrence when the Fax system is installed. Because FAX DIMM is an object of the data overwrite removal.
F69X F6AX F6BX F6CX	An error is detected at the HyPAS control section	1) Format the HDD and check function. (U024 FULL formatting) 2) Execute the U021 Memory initializing to initialize the controller backup memory and check function. 3) Replace the main board and check function. 4) Replace the HDD and check function. 5) Retrieve the USBLOG and contact the Service Administrative Division.	Driver/Util ity/KSF		
F6DX F6EX F6FX F70X F71X F72X F73X F74X F75X	An error is detected at the External Server management section	1) Check the external server and check function. 2) Chekc the connection to the external server and check function. 3) Check the network settings and check function. 4) Replace the bridge board and check function. 5) Replace the main board and check function. 6) Retrieve the USBLOG and contact the Service Administrative Division.	ConcordF W	*FieryOption related	[Main-FIERYBB Interface] Main board: YC33 FIERYBB board: YC2

1-4-4 Image formation problems

Isolate the component an image defect has occurred from.
<A guide to isolate the component of the cause.>
Run U089 to print a test page and check whether an image defect happens.
YES: Main unit as the cause of defect
NO: Scanner as the cause of defect
Perform enlarged or reduced copying and verify if the defective images are enlarged or reduced, accordingly.
YES: Scanner as the cause of defect

1. Scanner as the cause of defect:
   If the defect occurs with copying or sending, refer to P.1-4-206.
   (Defects caused by a reading error that occurs at the original (glass) LED lamp to CCD (DP: CIS).)

   Isolate the problem at the location that the originals are scanned.
   a. Single side DP (read by Main CCD)
   b. On the contact glass (read by Main CCD)
   c. Back side DP (For DPs mounted with CIS)

2. Main unit as the cause of defect:
   Verify whether the problem is caused with mono or full color development (defects seen over the entire image).

(1)Main unit as the cause of defect (Mono color) If the defect of image occurs with mono color development of a particular color, refer to P. 1-4-255.
(A defect of image forming occurs from the rendering process that involves charging, drum, LSU, developer, and primary transferring.)

(2)Main unit as the cause of defect (Image entirety) If the defect of image occurs with full color development, refer to P. 1-4-273.
(A defect of transferring and paper conveyance occurs from the rendering process that involves the intermediate belt, secondary transfer roller, fuser, ejection.)

<Flow of image data>
Copying :

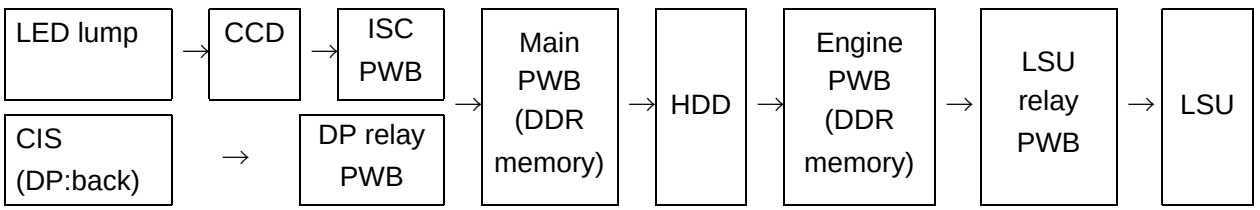

Sending :

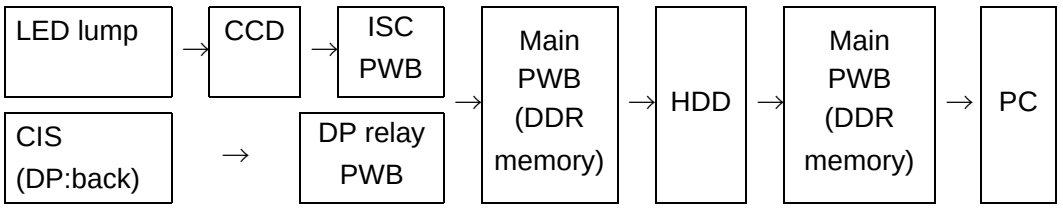

Printing data from PC :

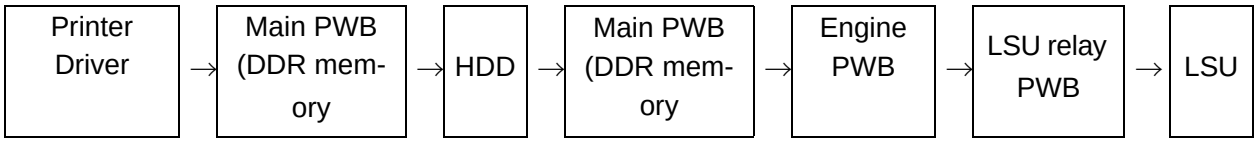

FAX (send) :

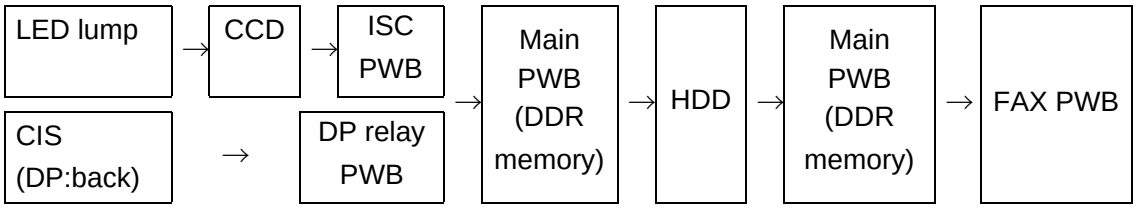

FAX receive :

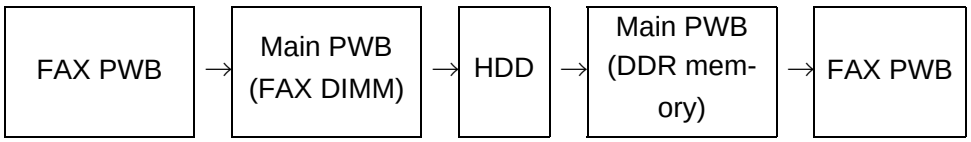

<Flow of rendering image>

Chraging > Drum > LSU > Development > Primary transfer (Intermediate transfer belt) >Secondary transfer > Fusing

1-4-5 Poor image (due to DP and scanner reading)

(1) No image appears (entirely white).

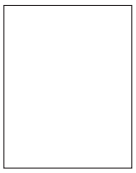

See page1-4-207

(2) No image appears (entirely black).

See page1-4-210

(3) Image is too light.

See page1-4-212

(4) The background is colored.

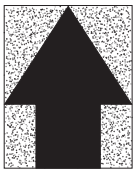

See page1-4-216

(5) White streaks are printed vertically.

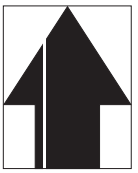

See page1-4-219

(6) Black or color streaks appear longitudinally.

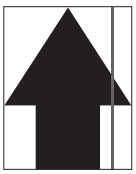

See page1-4-222

(7) Streaks are printed horizontally.

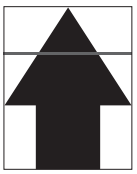

See page1-4-226

(8) One side of the print image is darker or brighter than the other.

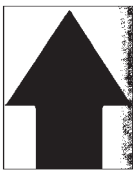

See page1-4-229

(9) Black or color dots appear on the image.

See page1-4-232

(10) Image is blurred.

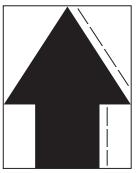

See page1-4-234

(11) The leading edge of the image is consistently misaligned with the original.

See page1-4-237

(12) Part of image is missing.

See page1-4-239

(13) Image is out of focus.

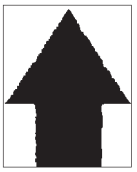

See page1-4-242

(14) Image center does not align with the original center.

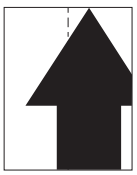

See page1-4-244

(15) Shifted colors

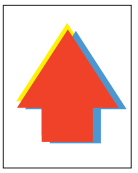

See page1-4-245

(16) Moire

See page1-4-249

(17) Skewed image

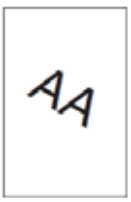

See page1-4-250

(18) Abnormal image

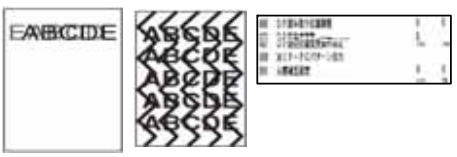

See page1-4-252

(1) No image appears (entirely white).

Print example
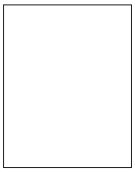

1. Table scanning

	Defective part	Check description	Corrective Action
1	Contact glass assy	Check the location the contact glass is mounted.	Re-mount the contact glass if it is hanged off.
2	FFC cable CCD	Check the FFC cable between the CCD sensor and ISC PWB is properly connected. Or, verify conduction of the wire.	Reinsert the connector if it its connection is loose. Or, if conduction is lot, replace the wire.
3	Home position sensor	Check the location the home position sensor is mounted.	Re-mount the home position sensor if it is hanged off.
4	Scanner wire drum	Check that the scanner drive gear is loosely mounted.	If the scanner wire drum is loosely mounted, secure the screws.
5	Scanner drive gear	Check that the scanner drive gear is loosely mounted.	If the scanner drive gear loosely mounted, secure the screw.
6	CCD PWB	The CCD PWB is defective.	Replace the ISU and perform U411. (see page 1-3-173)
7	ISC PWB	The ISC PWB is defective.	Replace the ISC PWB and perform U411. (see page 1-3-173)
8	Main PWB	The main PWB is defective.	Replace the main PWB.(see page 1-5-72)

2. DP-scanning first (front) page

	Defective part	Check description	Corrective Action
1	Original document	Verify the sides of the original document.	If the sides of the original document are reversed, place the original document properly.
2	Contact glass assy	Check the location the contact glass is mounted.	Re-mount the contact glass if it is hanged off.
3	FFC cable CCD	Check the FFC cable between the CCD sensor and ISC PWB is properly connected. Or, verify conduction of the wire.	Reinsert the connector if its connection is loose. Or, if conduction is lot, replace the wire.
4	Home position sensor	Check the location the home position sensor is mounted.	Re-mount the home position sensor if it is hanged off.
5	Scanner wire drum	Check that the scanner wire drum is loosely mounted.	If the scanner wire drum is loosely mounted, secure the screws.
6	Scanner drive gear	Check that the scanner drive gear is loosely mounted.	If the scanner drive gear loosely mounted, secure the screw.
7	CCD PWB	The CCD PWB is defective.	Replace the ISU and perform U411. (see page 1-3-173)
8	ISC PWB	The ISC PWB is defective.	Replace the ISC PWB and perform U411. (see page 1-3-173)
9	Main PWB	The main PWB is defective.	Replace the main PWB.(see page 1-5-72)

3. DP-scanning second (back) page (with a dual scan DP installed)

	Defective part	Check description	Corrective Action
1	Original document	Verify the sides of the original document.	If the sides of the original document are reversed, place the original document properly.
2	White-reference roller(Counter the CIS)	Check that the white-reference roller is smoothly operative.	If the white-reference roller does not rotate smoothly, re-install.
3	White-reference roller(Counter the CIS)	Check if the white reference roller is contaminated on its surface or damaged.	If the white-reference roller is dirty, clean. Or, if the roller is damaged, replace.
4	DP_CIS unit	Check the location the CIS unit is mounted.	Re-mount the CIS unit if it is hanged off.
5	DP_SHD PWB	Check the CIS and the SHD PWB is properly connected.	Reinsert the connector if the PWB was loosely inserted.If not cured, replace the PWB.
6	DP_CIS	CIS is defective.	Replace the CIS and perform U091 and U411. (see page 1-3-71,1-3-173)
7	Main PWB	The main PWB is defective.	Replace the main PWB.(see page 1-5-72)

4. DP-scanning second (back) page (with a reversed DP installed)

	Defective part	Check description	Corrective Action
1	Original document	Verify the sides of the original document.	If the sides of the original document are reversed, place the original document properly.
2	Contact glass assy	Check the location the contact glass is mounted.	Re-mount the contact glass if it is hanged off.
3	FFC cable CCD	Check the FFC cable between the CCD sensor and ISC PWB is properly connected. Or, verify conduction of the wire.	Reinsert the connector if its connection is loose. Or, if conduction is lot, replace the wire.
4	Home position sensor	Check the location the home position sensor is mounted.	Re-mount the home position sensor if it is hanged off.
5	Scanner wire drum	Check that the scanner wire drum is loosely mounted.	If the sacanner wire drum is loosely mounted, secure the screws.
6	Scanner drive gear	Check that the scanner drive gear is loosely mounted.	If the scanner drive gear loosely mounted, secure the screw.
7	CCD PWB	The CCD PWB is defective.	Replace the ISU and perform U411. (see page 1-3-173)
8	ISC PWB	The ISC PWB is defective.	Replace the ISC PWB and perform U411. (see page 1-3-173)
9	Main PWB	The main PWB is defective.	Replace the main PWB.(see page 1-5-72)

(2) No image appears (entirely black).

Print example

1. Table scanning

	Defective part	Check description	Corrective Action
1	FFC cable CCD	Check the FFC cable between the CCD sensor and ISC PWB is properly connected. Or, verify conduction of the wire.	Reinsert the connector if it its connection is loose. Or, if conduction is lot, replace the wire.
2	SATA cable ISC	Check the SATA cable between the ISC PWB and main PWB is properly connected. Or, verify conduction of the wire.	Reinsert the connector if it its connection is loose. Or, if conduction is lot, replace the wire.
3	CCD PWB	The CCD PWB is defective.	Replace the ISU PWB and perform U411. (see page 1-3-173)
4	ISC PWB	The ISC PWB is defective.	replace the ISC PWB and perform U411. (see page 1-3-173)
5	Main PWB	The main PWB is defective.	Replace the main PWB.(see page 1-5-72)

2. DP-scanning first (front) page

	Defective part	Check description	Corrective Action
1	Scanning position of the DP	Confirm the value using maintenance mode U068, DP Read.	If a large value is observed in maintenance mode U068, DP Read, perform adjustment.(see page 1-3-60)
2	FFC cable CCD	Check the FFC cable between the CCD sensor and ISC PWB is properly connected. Or, verify conduction of the wire.	Reinsert the connector if its connection is loose. Or, if conduction is lot, replace the wire.
3	SATA cable ISC	Check the SATA cable between the ISC PWB and main PWB is properly connected. Or, verify conduction of the wire.	Reinsert the connector if its connection is loose. Or, if conduction is lot, replace the wire.
4	CCD PWB	The CCD PWB is defective.	Replace the ISU and perform U411. (see page 1-3-173)
5	ISC PWB	The ISC PWB is defective.	replace the ISC PWB and perform U411. (see page 1-3-173)

	Defective part	Check description	Corrective Action
6	Main PWB	The main PWB is defective.	Replace the main PWB.(see page 1-5-72)

3. DP-scanning second (back) page (with a dual scan DP installed)

	Defective part	Check description	Corrective Action
1	DP_CIS unit	Check the location the CIS unit is mounted.	Re-mount the CIS unit if it is hanged off.
2	DP_SHD PWB	Check the CIS and the SHD PWB is properly connected.	Reinsert the connector if the PWB was loosely inserted.If not cured, replace the PWB.
3	DP_CIS	CIS is defective.	Replace the CIS and perform U091 and U411. (see page 1-3-71,1-3-173)
4	Main PWB	The main PWB is defective.	Replace the main PWB.(see page 1-5-72)

4. DP-scanning second (back) page (with a reversed DP installed)

	Defective part	Check description	Corrective Action
1	Scanning position of the DP	Confirm the value using maintenance mode U068, DP Read.	If a large value is observed in maintenance mode U068, DP Read, perform adjustment.(see page 1-3-60)
2	FFC cable CCD	Check the FFC cable between the CCD sensor and ISC PWB is properly connected. Or, verify conduction of the wire.	Reinsert the connector if it its connection is loose. Or, if conduction is lot, replace the wire.
3	SATA cable ISC	Check the SATA cable between the ISC PWB and main PWB is properly connected. Or, verify conduction of the wire.	Reinsert the connector if it its connection is loose. Or, if conduction is lot, replace the wire.
4	CCD PWB	The CCD PWB is defective.	Replace the ISU PWB and perform U411. (see page 1-3-173)
5	ISC PWB	The ISC PWB is defective.	replace the ISC PWB and perform U411. (see page 1-3-173)
6	Main PWB	The main PWB is defective.	Replace the main PWB.(see page 1-5-72)

(3) Image is too light.

Print example
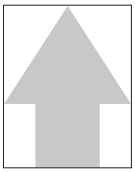

1. Table scanning

	Defective part	Check description	Corrective Action
1	The settings of the adjustment of density	Check the settings of the adjustment of density.	1. Deactivate EcoPrint if it is activated. Or, if the density is too low, chosse an image quality that suits the original docuemt in type. 2. Increase density. 3. Perform the background color adjustment using the system menu.
2	Settings of anti-offset	Check the settings of anti-offset.	If anti-offset is set to on, set it to off.
3	Adjustment of the scanner	Check the automatic adjustment of the scanner.	Perform maintenance mode U411, table(Chart1)_All. (see page 1-3-173)
4	Contact glass	Check whether the contact glass is dirty.	If the contact glass is dirty, clean the contact glass, and the bottom part of the shading plate.
5	Home position sensor	Check the location the home position sensor is mounted.	Re-mount the home position sensor if it is hanged off.
6	FFC cable CCD	Check the FFC cable between the CCD sensor and ISC PWB is properly connected. Or, verify conduction of the wire.	Reinsert the connector if its connection is loose. Or, if conduction is lot, replace the wire.
7	FFC cable LED	Check the FFC cable between the LED PWB and ISC PWB is properly connected. Or, verify conduction of the wire.	Reinsert the connector if its connection is loose. Or, if conduction is lot, replace the wire.
8	Lamp unit	Check the location the lamp unit is mounted.	Re-mount the lamp unit if it is hanged off.
9	LED PWB	Check that the LED is lit.	If the LED is not lit, replace the LED PWB and perform U411.
10	ISC PWB	The ISC PWB is defective.	Replace the ISC PWB and perform U411. (see page 1-3-173)
11	CCD PWB	The CCD PWB is defective.	Replace the ISU and perform U411. (see page 1-3-173)

	Defective part	Check description	Corrective Action
12	Main PWB	The main PWB is defective.	Replace the main PWB.(see page 1-5-72)

2. DP-scanning first (front) page

	Defective part	Check description	Corrective Action
1	The settings of the adjustment of density	Check the settings of the adjustment of density.	1. Deactivate EcoPrint if it is activated. Or, if the density is too low, chosse an image quality that suits the original docuemt in type. 2. Increase density. 3. Perform the background color adjustment using the system menu.
2	Settings of anti-offset	Check the settings of anti-offset.	If anti-offset is set to on, set it to off.
3	Adjustment of the scanner	Check the automatic adjustment of the scanner.	Perform maintenance mode U411, DP FaceUp(Chart1)_Input(see page 1-3-173)
4	Contact glass	Check whether the contact glass is dirty.	If the contact glass is dirty, clean the contact glass, and the bottom part of the shading plate.
5	Home position sensor	Check the location the home position sensor is mounted.	Re-mount the home position sensor if it is hanged off.
6	Scanning position of the DP	Check whether the scanning position of the DP is wrong.	If the scanning position of the DP is shifted, perform maintenance mode U068, DP Read.(see page 1-3-60)
7	FFC cable CCD	Check the FFC cable between the CCD sensor and ISC PWB is properly connected. Or, verify conduction of the wire.	Reinsert the connector if its connection is loose. Or, if conduction is lot, replace the wire.
8	FFC cable LED	Check the FFC cable between the LED PWB and ISC PWB is properly connected. Or, verify conduction of the wire.	Reinsert the connector if its connection is loose. Or, if conduction is lot, replace the wire.
9	Lamp unit	Check the location the lamp unit is mounted.	Re-mount the lamp unit if it is hanged off.
10	LED PWB	Check that the LED is lit.	If the LED is not lit, replace the LED PWB and perform U411.
11	ISC PWB	The ISC PWB is defective.	replace the ISC PWB and perform U411. (see page 1-3-173)
12	CCD PWB	The CCD PWB is defective.	Replace the ISU and perform U411. (see page 1-3-173)
13	Main PWB	The main PWB is defective.	Replace the main PWB.(see page 1-5-72)

3. DP-scanning second (back) page (with a dual scan DP installed)

	Defective part	Check description	Corrective Action
1	The settings of the adjustment of density	Check the settings of the adjustment of density.	1. Deactivate EcoPrint if it is activated. Or, if the density is too low, chosse an image quality that suits the original docuemt in type. 2. Increase density. 3. Perform the background color adjustment using the system menu.
2	Settings of anti-offset	Check the settings of anti-offset.	If anti-offset is set to on, set it to off.
3	Adjustment of the scanner	Check the automatic adjustment of the scanner.	Perform maintenance mode U411, DP FaceDown(Chart1)_All (see page 1-3-173)
4	White-reference roller(Counter the CIS)	Check that the white-reference roller is smoothly operative.	If the white-reference roller does not rotate smoothly, re-install.
5	White-reference roller(Counter the CIS)	Check if the white reference roller is contaminated on its surface or damaged.	If the white-reference roller is dirty, clean. Or, if the roller is damaged, replace.
6	DP_CIS unit	Check the location the CIS unit is mounted.	Re-mount the CIS unit if it is hanged off.
7	DP_SHD PWB	Check the CIS and the SHD PWB is properly connected.	Reinsert the connector if the PWB was loosely inserted.If not cured, replace the PWB.
8	DP_CIS	CIS is defective.	Replace the CIS and perform U091 and U411. (see page 1-3-71,1-3-173)
9	Main PWB	The main PWB is defective.	Replace the main PWB.(see page 1-5-72)

4. DP-scanning second (back) page (with a reversed DP installed)

	Defective part	Check description	Corrective Action
1	The settings of the adjustment of density	Check the settings of the adjustment of density.	1. Deactivate EcoPrint if it is activated. Or, if the density is too low, chosse an image quality that suits the original docuemt in type. 2. Increase density. 3. Perform the background color adjustment using the system menu.
2	Settings of anti-offset	Check the settings of anti-offset.	If anti-offset is set to on, set it to off.
3	Adjustment of the scanner	Check the automatic adjustment of the scanner.	Perform maintenance mode U411, DP FaceUp(Chart1)_Input. (see page 1-3-173)

	Defective part	Check description	Corrective Action
4	Contact glass	Check whether the contact glass is dirty.	If the contact glass is dirty, clean the contact glass, and the bottom part of the shading plate.
5	Home position sensor	Check the location the home position sensor is mounted.	Re-mount the home position sensor if it is hanged off.
6	Scanning position of the DP	Check whether the scanning position of the DP is wrong.	If the scanning position of the DP is shifted, perform maintenance mode U068, DP Read.(see page 1-3-60)
7	FFC cable CCD	Check the FFC cable between the CCD sensor and ISC PWB is properly connected. Or, verify conduction of the wire.	Reinsert the connector if its connection is loose. Or, if conduction is lot, replace the wire.
8	FFC cable LED	Check the FFC cable between the LED PWB and ISC PWB is properly connected. Or, verify conduction of the wire.	Reinsert the connector if its connection is loose. Or, if conduction is lot, replace the wire.
9	Lamp unit	Check the location the lamp unit is mounted.	Re-mount the lamp unit if it is hanged off.
10	LED PWB	Check that the LED is lit.	If the LED is not lit, replace the LED PWB and perform U411.
11	ISC PWB	The ISC PWB is defective.	Replace the ISC PWB and perform U411. (see page 1-3-173)
12	CCD PWB	The CCD PWB is defective.	Replace the ISU and perform U411. (see page 1-3-173)
13	Main PWB	The main PWB is defective.	Replace the main PWB.(see page 1-5-72)

(4) The background is colored.

Print example
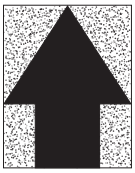

1. Table scanning

	Defective part	Check description	Corrective Action
1	Original document	1. Check if the background density of the original document is too dense. 2. Check if the original document is floated during scanning.	1. If the background density of the original document is too dense, perform automatic background adjustment.Or, adjust density with background adjustment. 2. If the original document is floated during scanning, press down the original document.
2	Adjustment of the scanner	Check the automatic adjustment of the scanner.	Perform maintenance mode U411, table(Chart1)_All. (see page 1-3-173)
3	Contact glass	Check whether the contact glass is dirty.	If the contact glass is dirty, clean the contact glass, and the bottom part of the shading plate.
4	Contact glass assy	Check the location the contact glass is mounted.	Re-mount the contact glass if it is hanged off.
5	Home position sensor	Check the location the home position sensor is mounted.	Re-mount the home position sensor if it is hanged off.
6	FFC cable CCD	Check the FFC cable between the CCD sensor and ISC PWB is properly connected. Or, verify conduction of the wire.	Reinsert the connector if its connection is loose. Or, if conduction is lot, replace the wire.
7	FFC cable LED	Check the FFC cable between the LED PWB and ISC PWB is properly connected. Or, verify conduction of the wire.	Reinsert the connector if its connection is loose. Or, if conduction is lot, replace the wire.
8	Lamp unit	Check the location the lamp unit is mounted.	Re-mount the lamp unit if it is hanged off.
9	LED PWB	Check that the LED is lit.	If the LED is not lit, replace the LED PWB and perform U411.
10	ISC PWB	The ISC PWB is defective.	replace the ISC PWB and perform U411. (see page 1-3-173)
11	CCD PWB	The CCD PWB is defective.	Replace the ISU and perform U411. (see page 1-3-173)

	Defective part	Check description	Corrective Action
12	Main PWB	The main PWB is defective.	Replace the main PWB.(see page 1-5-72)

2. DP-scanning first (front) page

	Defective part	Check description	Corrective Action
1	Original document	1. Check if the background density of the original document is too dense. 2. Check if the original document is floated during scanning.	1. If the background density of the original document is too dense, perform automatic background adjustment.Or, adjust density with background adjustment. 2. Adjust the location the DP is mounted.
2	Adjustment of the scanner	Check the automatic adjustment of the scanner.	Perform maintenance mode U411, DP FaceUp(Chart1)_All. (see page 1-3-173)
3	Contact glass	Check whether the contact glass is dirty.	If the contact glass is dirty, clean the contact glass, and the bottom part of the shading plate.
4	Contact glass assy	Check the location the contact glass is mounted.	Re-mount the contact glass if it is hanged off.
5	Home position sensor	Check the location the home position sensor is mounted.	Re-mount the home position sensor if it is hanged off.
6	Installing DP	Check whether the DP frame is distorted or the hinges are damaged.	If the DP is damgged, replace the DP.
7	FFC cable CCD	Check the FFC cable between the CCD sensor and ISC PWB is properly connected. Or, verify conduction of the wire.	Reinsert the connector if its connection is loose. Or, if conduction is lot, replace the wire.
8	FFC cable LED	Check the FFC cable between the LED PWB and ISC PWB is properly connected. Or, verify conduction of the wire.	Reinsert the connector if its connection is loose. Or, if conduction is lot, replace the wire.
9	Lamp unit	Check the location the lamp unit is mounted.	Re-mount the lamp unit if it is hanged off.
10	LED PWB	Check that the LED is lit.	If the LED is not lit, replace the LED PWB and perform U411.
11	ISC PWB	The ISC PWB is defective.	Replace the ISC PWB and perform U411. (see page 1-3-173)
12	CCD PWB	The CCD PWB is defective.	Replace the ISU and perform U411. (see page 1-3-173)
13	Main PWB	The main PWB is defective.	Replace the main PWB.(see page 1-5-72)

3. DP-scanning second (back) page (with a dual scan DP installed)

	Defective part	Check description	Corrective Action
1	Original document	1. Check if the background density of the original document is too dense. 2. Check if the original document is floated during scanning.	1. If the background density of the original document is too dense, perform automatic background adjustment.Or, adjust density with background adjustment. 2. Adjust the location the CIS unit is mounted.
2	Adjustment of the scanner	Check the automatic adjustment of the scanner.	Perform maintenance mode U411, DP FaceDown(Chart1)_All. (see page 1-3-173)
3	White-reference roller(Counter the CIS)	Check that the white-reference roller is smoothly operative.	If the white-reference roller does not rotate smoothly, re-install.
4	White-reference roller(Counter the CIS)	Check if the white reference roller is contaminated on its surface or damaged.	If the white-reference roller is dirty, clean. Or, if the roller is damaged, replace.
5	DP_CIS unit	Check the location the CIS unit is mounted.	Re-mount the CIS unit if it is hanged off.
6	DP_SHD PWB	Check the CIS and the SHD PWB is properly connected.	Reinsert the connector if the PWB was loosely inserted.If not cured, replace the PWB.
7	DP_CIS	CIS is defective.	Replace the CIS and perform U091 and U411. (see page 1-3-71,1-3-173)
8	Main PWB	The main PWB is defective.	Replace the main PWB.(see page 1-5-72)

4. DP-scanning second (back) page (with a reversed DP installed)

	Defective part	Check description	Corrective Action
1	Original document	1. Check if the background density of the original document is too dense. 2. Check if the original document is floated during scanning.	1. If the background density of the original document is too dense, perform automatic background adjustment.Or, adjust density with background adjustment. 2. Adjust the location the DP is mounted.
2	Adjustment of the scanner	Check the automatic adjustment of the scanner.	Perform maintenance mode U411, DP FaceUp(Chart1)_Input. (see page 1-3-173)
3	Contact glass	Check whether the contact glass is dirty.	If the contact glass is dirty, clean the contact glass, and the bottom part of the shading plate.
4	Contact glass assy	Check the location the contact glass is mounted.	Re-mount the contact glass if it is hanged off.
5	Home position sensor	Check the location the home position sensor is mounted.	Re-mount the home position sensor if it is hanged off.

	Defective part	Check description	Corrective Action
6	FFC cable CCD	Check the FFC cable between the CCD sensor and ISC PWB is properly connected. Or, verify conduction of the wire.	Reinsert the connector if it its connection is loose. Or, if conduction is lot, replace the wire.
7	FFC cable LED	Check the FFC cable between the LED PWB and ISC PWB is properly connected. Or, verify conduction of the wire.	Reinsert the connector if it its connection is loose. Or, if conduction is lot, replace the wire.
8	Lamp unit	Check the location the lamp unit is mounted.	Re-mount the lamp unit if it is hanged off.
9	LED PWB	Check that the LED is lit.	If the LED is not lit, replace the LED PWB and perform U411.
10	ISC PWB	The ISC PWB is defective.	Replace the ISC PWB and perform U411. (see page 1-3-173)
11	CCD PWB	The CCD PWB is defective.	Replace the ISU and perform U411. (see page 1-3-173)
12	Main PWB	The main PWB is defective.	Replace the main PWB.(see page 1-5-72)

(5) White streaks are printed vertically.

Print example
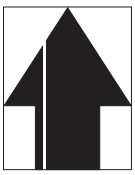

1. Table scanning

	Defective part	Check description	Corrective Action
1	Original document	Check whether the original document is dirty.	If the original document is dirty, replace.
2	Contact glass	Check whether the contact glass is dirty.	If the contact glass is dirty, clean the contact glass, and the bottom part of the shading plate.
3	Mirror	Check whether the mirrors are dirty.	If the mirrors are dirty, clean the three mirrors.
4	Lamp unit	Check that the lamp unit is contaminated with dusts.	If dusts are observed on the lamp unit, remove the dusts in the light paths.
5	Lamp unit	Check whether the LED cover is hanged off.	Re-mount the LED cover if it is hanged off.

	Defective part	Check description	Corrective Action
6	ISU	Check whether the lens cover is hanged off.	Re-mount the lens cover if it is hanged off.
7	Shading plate	Check whether the shading plate is dirty.	If the shading plate is dirty, perform maintenance mode U063 to modify the shading position. If it does not cure, replace the contact glass assembly. (see page 1-3-173)
8	ISC PWB	The ISC PWB is defective.	Replace the ISC PWB and perform U411. (see page 1-3-173)
9	CCD PWB	The CCD PWB is defective.	Replace the ISU and perform U411. (see page 1-3-173)
10	Main PWB	The main PWB is defective.	Replace the main PWB.(see page 1-5-72)

2. DP-scanning first (front) page

	Defective part	Check description	Corrective Action
1	Original document	Check whether the original document is dirty.	If the original document is dirty, replace.
2	Contact glass	Check whether the contact glass is dirty.	If the contact glass is dirty, clean the contact glass, and the bottom part of the shading plate.
3	Mirror	Check whether the mirrors are dirty.	If the mirrors are dirty, clean the three mirrors.
4	Lamp unit	Check that the lamp unit is contaminated with dusts.	If dusts are observed on the lamp unit, remove the dusts in the light paths.
5	Lamp unit	Check whether the LED cover is hanged off.	Re-mount the LED cover if it is hanged off.
6	ISU	Check whether the lens cover is hanged off.	Re-mount the lens cover if it is hanged off.
7	Shading plate	Check whether the shading plate is dirty.	If the shading plate is dirty, perform maintenance mode U063 to modify the shading position. If it does not cure, replace the contact glass assembly. (see page 1-3-55)
8	ISC PWB	The ISC PWB is defective.	Replace the ISC PWB and perform U411. (see page 1-3-173)
9	CCD PWB	The CCD PWB is defective.	Replace the ISU and perform U411. (see page 1-3-173)
10	Main PWB	The main PWB is defective.	Replace the main PWB.(see page 1-5-72)

3. DP-scanning second (back) page (with a dual scan DP installed)

	Defective part	Check description	Corrective Action
1	White-reference roller (Counter the CIS)	Check if the white reference roller is contaminated on its surface or damaged.	If the white-reference roller is dirty, clean. Or, if the roller is damaged, replace.
2	DP_CIS glass	Check whether the CIS glass is contaminated.	If the CIS glass is contaminated, clean the CIS glass and conveying guide. If it has a scuff, replace.
3	White streaks compensation settings	Check the white streaks compensation settings.	If the white streaks compensation is insufficient, perform maintenance mode U091.
4	DP_CIS unit	Check the location the CIS unit is mounted.	Re-mount the CIS unit if it is hanged off.
5	DP_SHD PWB	Check the CIS and the SHD PWB is properly connected.	Reinsert the connector if the PWB was loosely inserted.If not cured, replace the PWB.
6	DP_CIS	CIS is defective.	Replace the CIS and perform U091 and U411. (see page 1-3-71,1-3-173)
7	Main PWB	The main PWB is defective.	Replace the main PWB.(see page 1-5-72)

4. DP-scanning second (back) page (with a reversed DP installed)

	Defective part	Check description	Corrective Action
1	Original document	Check whether the original document is dirty.	If the original document is dirty, replace.
2	Contact glass	Check whether the contact glass is dirty.	If the contact glass is dirty, clean the contact glass, and the bottom part of the shading plate.
3	Mirror	Check whether the mirrors are dirty.	If the mirrors are dirty, clean the three mirrors.
4	Lamp unit	Check that the lamp unit is contaminated with dusts.	If dusts are observed on the lamp unit, remove the dusts in the light paths.
5	Lamp unit	Check whether the LED cover is hanged off.	Re-mount the LED cover if it is hanged off.
6	ISU	Check whether the lens cover is hanged off.	Re-mount the lens cover if it is hanged off.
7	Shading plate	Check whether the shading plate is dirty.	If the shading plate is dirty, perform maintenance mode U063 to modify the shading position. If it does not cure, replace the contact glass assembly. (see page 1-3-55)
8	ISC PWB	The ISC PWB is defective.	Replace the ISC and perform U411. (see page 1-3-173)

	Defective part	Check description	Corrective Action
9	CCD PWB	The CCD PWB is defective.	Replace the ISU PWB and perform U411. (see page 1-3-173)
10	Main PWB	The main PWB is defective.	Replace the main PWB.(see page 1-5-72)

(6) Black or color streaks appear longitudinally.

Print example
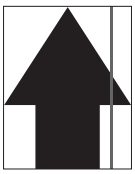

1. Table scanning

	Defective part	Check description	Corrective Action
1	Original document	Check whether the original document is dirty.	If the original document is dirty, replace.
2	Original document	Check if the size of the original document and its reference size match.	If the size of the original document and its reference size do not match, set the correct document size or activate border erasure.
3	Contact glass assy	Check the location the contact glass is mounted.	Re-mount the contact glass if it is hanged off.
4	Adjustment of the scanner	Check whether the outer areas of the original document have streaks or lines.	1. Perform maintenance mode U067, Front.(see page 1-3-58) 2. Perform maintenance mode U411, Table (Chart1)_Input. (see page 1-3-173)
5	Contact glass	Check whether the contact glass is dirty.	If the contact glass is dirty, clean.
6	mirror	Check whether the mirrors are dirty.	If the mirrors are dirty, clean the three mirrors.
7	Lamp unit	Check that the lamp unit is contaminated with dusts.	If dusts are observed on the lamp unit, remove the dusts in the light paths.
8	CCD sensor	Check that the CCD sensor glass is contaminated with dusts.	If dusts are observed on the CCD sensor glass,remove the dusts by an air blower.

	Defective part	Check description	Corrective Action
9	Shading plate	Check whether the shading plate is dirty.	If the shading plate is dirty, perform maintenance mode U063 to modify the shading position. If it does not cure, replace the contact glass assembly. (see page 1-3-55)
10	ISC PWB	The ISC PWB is defective.	Replace the ISC PWB and perform U411. (see page 1-3-173)
11	CCD PWB	The CCD PWB is defective.	Replace the ISU and perform U411. (see page 1-3-173)
12	Main PWB	The main PWB is defective.	Replace the main PWB.(see page 1-5-72)

2. DP-scanning first (front) page

	Defective part	Check description	Corrective Action
1	Original document	Check whether the original document is dirty.	If the original document is dirty, replace.
2	Original document	Check if the size of the original document and its reference size match.	If the size of the original document and its reference size do not match, set the correct document size or activate border erasure.
3	Scanning position of the DP	Check whether the scanning position of the DP is wrong.	If the scanning position of the DP is shifted, perform maintenance mode U068, DP Read. (see page 1-3-60)
4	Adjustment of the scanner	Check whether the outer areas of the original document have streaks or lines.	1. Perform maintenance mode U072, Front. (see page 1-3-65) 2. Perform maintenance mode U411, DP Auto Adj. 3. Perform maintenance mode U411, DP FaceUp(Chart2)_Input. (see page 1-3-173)
5	Slit glass, Contact glass	Check whether the slit glass and contact glass are dirty.	If the slit glass and contact glass are dirty, clean the contact glass, the slit glass, the bottom part of the shading plate, and the conveying guide.
6	Mirror	Check whether the mirrors are dirty.	If the mirrors are dirty, clean the three mirrors.
7	Lamp unit	Check that the lamp unit is contaminated with dusts.	If dusts are observed on the lamp unit, remove the dusts in the light paths.
8	CCD sensor	Check that the CCD sensor glass is contaminated with dusts.	If dusts are observed on the CCD sensor glass,remove the dusts by an air blower.

	Defective part	Check description	Corrective Action
9	Shading plate	Check whether the shading plate is dirty.	If the shading plate is dirty, perform maintenance mode U063 to modify the shading position. If it does not cure, replace the contact glass assembly. (see page 1-3-55)
10	ISC PWB	The ISC PWB is defective.	Replace the ISC PWB and perform U411. (see page 1-3-173)
11	CCD PWB	The CCD PWB is defective.	Replace the ISU and perform U411. (see page 1-3-173)
12	Main PWB	The main PWB is defective.	Replace the main PWB.(see page 1-5-72)

3. DP-scanning second (back) page (with a dual scan DP installed)

	Defective part	Check description	Corrective Action
1	Adjustment of the scanner	Check if the outer areas of the original document have streaks or lines.	1. Perform maintenance mode U072, CIS. (see page 1-3-65) 2. Perform maintenance mode U411, DP Auto Adj. 3. Perform maintenance mode U411, DP FaceDown(Chart1)_All. (see page 1-3-173)
2	DP_CIS glass	Check whether the CIS glass of the DP is contaminated.	If the CIS glass of the DP is contaminated, clean. Or, if it has scuffs, replace.
3	DP guide plate	Check whether the DP guide plate is dirty.	If the guide plate is dirty, clean the guide plate and the conveying guide.
4	DP regist pulley	The DP regist pulley is contaimi-nated.	If the DP regist pully is contaminated, clean the DP regist pulley.
5	White-reference roller(Counter the CIS)	Check if the white reference roller is contaminated on its sur-face or damaged.	If the white-reference roller is dirty, clean. Or, if the roller is damaged, replace.
6	White streaks com-pensation settings	Check the white streaks com-pensation settings.	If the white streaks compensation is insufficient, perform maintenance mode U091.(see page 1-3-71)
7	DP_CIS unit	Check the location the CIS unit is mounted.	Re-mount the CIS unit if it is hanged off.
8	DP_SHD PWB	Check the CIS and the SHD PWB is properly connected.	Reinsert the connector if the PWB was loosely inserted.If not cured, replace the PWB.
9	DP_CIS	CIS is defective.	Replace the CIS and perform U091 and U411. (see page 1-3-71,1-3-173)
10	Main PWB	The main PWB is defective.	Replace the main PWB.(see page 1-5-72)

4. DP-scanning second (back) page (with a reversed DP installed)

	Defective part	Check description	Corrective Action
1	Original document	Check whether the original document is dirty.	If the original document is dirty, replace.
2	Original document	Check if the size of the original document and its reference size match.	If the size of the original document and its reference size do not match, set the correct document size or activate border erasure.
3	Adjustment of the scanner	Check if the outer areas of the original document have streaks or lines.	Perform maintenance mode U072, Front. (see page 1-3-65)
4	Scanning position of the DP	Check whether the scanning position of the DP is wrong.	If the scanning position of the DP is shifted, perform maintenance mode U068, DP Read. (see page 1-3-60)
5	Slit glass, contact glass	Check whether the slit glass and contact glass are dirty.	If the slit glass and contact glass are dirty, clean the contact glass, the slit glass, the bottom part of the shading plate, and the conveying guide.
6	Mirror	Check whether the mirrors are dirty.	If the mirrors are dirty, clean the three mirrors.
7	Lamp unit	Check that the lamp unit is contaminated with dusts.	If dusts are observed on the lamp unit, remove the dusts in the light paths.
8	CCD sensor	Check that the CCD sensor glass is contaminated with dusts.	If dusts are observed on the CCD sensor glass,remove the dusts by an air blower.
9	Shading plate	Check whether the shading plate is dirty.	If the shading plate is dirty, perform maintenance mode U063 to modify the shading position. If it does not cure, replace the contact glass assembly. (see page 1-3-55)
10	ISC PWB	The ISC PWB is defective.	Replace the ISC PWB and perform U411. (see page 1-3-173)
11	CCD PWB	The CCD PWB is defective.	Replace the ISU and perform U411. (see page 1-3-173)
12	Main PWB	The main PWB is defective.	Replace the main PWB.(see page 1-5-72)

(7) Streaks are printed horizontally.

Print example
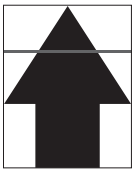

1. Table scanning

	Defective part	Check description	Corrective Action
1	Original document	Check whether the original document is dirty.	If the original document is dirty, replace.
2	Contact glass	Check whether the contact glass is dirty.	If the contact glass is dirty, clean the contact glass, and the bottom part of the shading plate.
3	Ajusting scanner	Check that the image at the back of the size indicator has been rendered.	1. If the image at the back of the size indicator, has been rendered perform maintenance mode U066, Front. (see page 1-3-58) 2. Perform maintenance mode U411, Table(Chart1)_Input.(see page 1-3-173)
4	FFC cable CCD	Check the FFC cable between the CCD sensor and ISC PWB is properly connected. Or, verify conduction of the wire.	Reinsert the connector if its connection is loose. Or, if conduction is lot, replace the wire.
5	FFC cable LED	Check the FFC cable between the LED PWB and ISC PWB is properly connected. Or, verify conduction of the wire.	Reinsert the connector if its connection is loose. Or, if conduction is lot, replace the wire.
6	SATA cable ISC	Check the SATA cable between the ISC PWB and main PWB is properly connected. Or, verify conduction of the wire.	Reinsert the connector if its connection is loose. Or, if conduction is lot, replace the wire.
7	LED PWB	Check that the LED is lit.	If the LED is not lit, replace the LED PWB and perform U411.
8	ISC PWB	The ISC PWB is defective.	Replace the ISC PWB and perform U411. (see page 1-3-173)
9	Main PWB	The main PWB is defective.	Replace the main PWB.(see page 1-5-72)

2. DP-scanning first (front) page

	Defective part	Check description	Corrective Action
1	Original document	Check whether the original document is dirty.	If the original document is dirty, replace.
2	Contact glass	Check whether the contact glass is dirty.	If the contact glass is dirty, clean the contact glass, and the bottom part of the shading plate.
3	FFC cable CCD	Check the FFC cable between the CCD sensor and ISC PWB is properly connected. Or, verify conduction of the wire.	Reinsert the connector if its connection is loose. Or, if conduction is lot, replace the wire.
4	FFC cable LED	Check the FFC cable between the LED PWB and ISC PWB is properly connected. Or, verify conduction of the wire.	Reinsert the connector if its connection is loose. Or, if conduction is lot, replace the wire.
5	SATA cable ISC	Check the SATA cable between the ISC PWB and main PWB is properly connected. Or, verify conduction of the wire.	Reinsert the connector if its connection is loose. Or, if conduction is lot, replace the wire.
6	LED PWB	Check that the LED is lit.	If the LED is not lit, replace the LED PWB and perform U411.
7	ISC PWB	The ISC PWB is defective.	Replace the ISC PWB and perform U411. (see page 1-3-173)
8	Main PWB	The main PWB is defective.	Replace the main PWB.(see page 1-5-72)

3. DP-scanning second (back) page (with a dual scan DP installed)

	Defective part	Check description	Corrective Action
1	Original document	Check whether the original document is dirty.	If the original document is dirty, replace.
2	DP_CIS glass	Check whether the CIS glass of the DP is contaminated.	If the CIS glass of the DP is contaminated, clean. Or, if it has scuffs, replace.
3	DP_CIS unit	Check the location the CIS unit is mounted.	Re-mount the CIS unit if it is hanged off.
4	DP_SHD PWB	Check the CIS and the SHD PWB is properly connected.	Reinsert the connector if the PWB was loosely inserted.If not cured, replace the PWB.
5	DP_SATA cable	Check the FFC cable between the SHD PWB and ISC PWB is properly connected. Or, verify conduction of the wire.	Reinsert the connector if its connection is loose. Or, if conduction is lot, replace the wire.
6	DP_CIS	CIS is defective.	Replace the CIS and perform U091 and U411. (see page 1-3-71,1-3-173)

	Defective part	Check description	Corrective Action
7	Main PWB	The main PWB is defective.	Replace the main PWB.(see page 1-5-72)

4. DP-scanning second (back) page (with a reversed DP installed)

	Defective part	Check description	Corrective Action
1	Original document	Check whether the original document is dirty.	If the original document is dirty, replace.
2	Contact glass	Check whether the contact glass is dirty.	If the contact glass is dirty, clean the contact glass, and the bottom part of the shading plate.
3	FFC cable CCD	Check the FFC cable between the CCD sensor and ISC PWB is properly connected. Or, verify conduction of the wire.	Reinsert the connector if its connection is loose. Or, if conduction is lot, replace the wire.
4	FFC cable LED	Check the FFC cable between the LED PWB and ISC PWB is properly connected. Or, verify conduction of the wire.	Reinsert the connector if its connection is loose. Or, if conduction is lot, replace the wire.
5	SATA cable ISC	Check the SATA cable between the ISC PWB and main PWB is properly connected. Or, verify conduction of the wire.	Reinsert the connector if its connection is loose. Or, if conduction is lot, replace the wire.
6	LED PWB	Check that the LED is lit.	If the LED is not lit, replace the LED PWB and perform U411.
7	ISC PWB	The ISC PWB is defective.	Replace the ISC PWB and perform U411. (see page 1-3-173)
8	Main PWB	The main PWB is defective.	Replace the main PWB.(see page 1-5-72)

(8) One side of the print image is darker or brighter than the other.

Print example
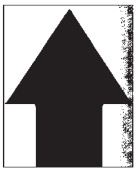

1. Table scanning

	Defective part	Check description	Corrective Action
1	Original document	Check whether the original document is dirty.	If the original document is dirty, replace.
2	Original document	Check if the original document has creases or foldings or wrinkles.	If the original document has foldings or creases, remove them.
3	Position of the mat of the platen	Check whether the position of the mat of the DP or the platen is wrong.	If the position of the mat of the DP or the platen is shifted, re-mount.
4	Contact glass	Check whether the contact glass is dirty.	If the contact glass is dirty, clean the contact glass, and the bottom part of the shading plate.
5	Contact glass assy	Check the location the contact glass is mounted.	Re-mount the contact glass if it is hanged off.
6	Lamp unit	Check the position at which the light guide panel is mounted.	If the light guide panel has been fallen off of the mounting position, fix it properly.
7	Mirror	Check whether the mirrors are dirty.	If the mirrors are dirty, clean the three mirrors.
8	ISU	Check the location the ISU unit is mounted.	Insert a spacer between the scanner unit and the ISU to change the height. (see page 1-5-36)
9	LED PWB	Check that the LED is lit.	If the LED is not lit, replace the LED PWB and perform U411.(see page 1-3-173)
10	LED Assy	Check the mounting position of the refelector board or if it is distorted.	If the LED assy is hanged off of the mounting position of the reflector or it is deformed, replace the LED assy.
11	Lamp unit	Check that the contact part of the lamp unit and the rail is distorted.	If the contact part of the lamp unit and the rail is distorted, replace the lamp unit.
12	Mirror unit	Check the location the mirror is mounted.	Re-mount the mirror if it is hanged off. Or, if the mirror is damaged, replace.
13	Mirror unit	Check that the contact part of the mirror unit and the rail is distorted.	If the contact part of the mirror unit and the rail is distorted, replace the mirror unit.

	Defective part	Check description	Corrective Action
14	ISC PWB	The ISC PWB is defective.	Replace the ISC PWB and perform U411. (see page 1-3-173)
15	CCD PWB	The CCD PWB is defective.	Replace the ISU and perform U411. (see page 1-3-173)
16	Main PWB	The main PWB is defective.	Replace the main PWB.(see page 1-5-72)

2. DP-scanning first (front) page

	Defective part	Check description	Corrective Action
1	Original document	Check whether the original document is dirty.	If the original document is dirty, replace.
2	Original document	Check if the original document has creases or foldings or wrinkles.	If the original document has foldings or creases, remove them.
3	DP scanning guide	Check that the scanning guide is smoothly operative.	If the scanning guide does not move smoothly, re-install.
4	Contact glass	Check whether the contact glass is dirty.	If the contact glass is dirty, clean the contact glass, and the bottom part of the shading plate.
5	Contact glass assy	Check the location the contact glass is mounted.	Re-mount the contact glass if it is hanged off.
6	LED PWB	Check that the LED is lit.	If the LED is not lit, replace the LED PWB and perform U411.
7	ISC PWB	The ISC PWB is defective.	Replace the ISC PWB and perform U411. (see page 1-3-173)
8	CCD PWB	The CCD PWB is defective.	Replace the ISU and perform U411. (see page 1-3-173)
9	Main PWB	The main PWB is defective.	Replace the main PWB.(see page 1-5-72)

3. DP-scanning second (back) page (with a dual scan DP installed)

	Defective part	Check description	Corrective Action
1	Original document	Check whether the original document is dirty.	If the original document is dirty, replace.
2	Original document	Check if the original document has creases or foldings or wrinkles.	If the original document has foldings or creases, remove them.
3	White-reference roller(Counter the CIS)	Check that the white-reference roller is smoothly operative.	If the white-reference roller does not rotate smoothly, re-install.

	Defective part	Check description	Corrective Action
4	DP_CIS	CIS is defective.	Replace the CIS and perform U091 and U411. (see page 1-3-71,1-3-173)
5	Main PWB	The main PWB is defective.	Replace the main PWB.(see page 1-5-72)

4. DP-scanning second (back) page (with a reversed DP installed)

	Defective part	Check description	Corrective Action
1	Original document	Check whether the original document is dirty.	If the original document is dirty, replace.
2	Original document	Check if the original document has creases or foldings or wrinkles.	If the original document has foldings or creases, remove them.
3	DP scanning guide	Check that the scanning guide is smoothly operative.	If the scanning guide does not move smoothly, re-install.
4	Contact glass	Check whether the contact glass is dirty.	If the contact glass is dirty, clean the contact glass, and the bottom part of the shading plate.
5	Contact glass assy	Check the location the contact glass is mounted.	Re-mount the contact glass if it is hanged off.
6	LED PWB	Check that the LED is lit.	If the LED is not lit, replace the LED PWB and perform U411. (see page 1-3-173)
7	ISC PWB	The ISC PWB is defective.	Replace the ISC PWB and perform U411. (see page 1-3-173)
8	CCD PWB	The CCD PWB is defective.	Replace the ISU and perform U411. (see page 1-3-173)
9	Main PWB	The main PWB is defective.	Replace the main PWB.(see page 1-5-72)

(9) Black or color dots appear on the image.

Print example
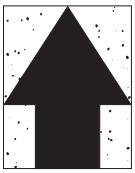

1. Table scanning

	Defective part	Check description	Corrective Action
1	Original document	Check whether the original document is dirty.	If the original document is dirty, replace.
2	Contact glass	Check whether the contact glass is dirty.	If the contact glass is dirty, clean the contact glass, and the bottom part of the shading plate.
3	FFC cable CCD	Check the FFC cable between the CCD sensor and ISC PWB is properly connected. Or, verify conduction of the wire.	Reinsert the connector if its connection is loose. Or, if conduction is lot, replace the wire.
4	SATA cable ISC	Check the SATA cable between the ISC PWB and main PWB is properly connected. Or, verify conduction of the wire.	Reinsert the connector if its connection is loose. Or, if conduction is lot, replace the wire.
5	Main PWB	The main PWB is defective.	Replace the main PWB.(see page 1-5-72)

2. DP-scanning first (front) page

	Defective part	Check description	Corrective Action
1	Original document	Check whether the original document is dirty.	If the original document is dirty, replace.
2	Contact glass	Check whether the contact glass is dirty.	If the contact glass is dirty, clean the contact glass, and the bottom part of the shading plate.
3	FFFC cable CCD	Check the FFC cable between the CCD sensor and ISC PWB is properly connected. Or, verify conduction of the wire.	Reinsert the connector if its connection is loose. Or, if conduction is lot, replace the wire.
4	SATA cable ISC	Check the SATA cable between the ISC PWB and main PWB is properly connected. Or, verify conduction of the wire.	Reinsert the connector if its connection is loose. Or, if conduction is lot, replace the wire.
5	Main PWB	The main PWB is defective.	Replace the main PWB.(see page 1-5-72)

3. DP-scanning second (back) page (with a dual scan DP installed)

	Defective part	Check description	Corrective Action
1	Original document	Check whether the original document is dirty.	If the original document is dirty, replace.
2	DP_SHD PWB	Check the CIS and the SHD PWB is properly connected.	Reinsert the connector if the PWB was loosely inserted.If not cured, replace the PWB.
3	DP_SATA cable	Check the FFC cable between the SHD PWB and I/F PWB is properly connected. Or, verify conduction of the wire.	Reinsert the connector if it its connection is loose. Or, if conduction is lot, replace the wire.
4	DP_CIS	CIS is defective.	Replace the CIS and perform U091 and U411. (see page 1-3-71,1-3-173)
5	Main PWB	The main PWB is defective.	Replace the main PWB.(see page 1-5-72)

4. DP-scanning second (back) page (with a reversed DP installed)

	Defective part	Check description	Corrective Action
1	Original document	Check whether the original document is dirty.	If the original document is dirty, replace.
2	Contact glass	Check whether the contact glass is dirty.	If the contact glass is dirty, clean the contact glass, and the bottom part of the shading plate.
3	FFC cable CCD	Check the FFC cable between the CCD sensor and ISC PWB is properly connected. Or, verify conduction of the wire.	Reinsert the connector if its connection is loose. Or, if conduction is lot, replace the wire.
4	SATA cable ISC	Check the SATA cable between the ISC PWB and main PWB is properly connected. Or, verify conduction of the wire.	Reinsert the connector if its connection is loose. Or, if conduction is lot, replace the wire.
5	Main PWB	The main PWB is defective.	Replace the main PWB.(see page 1-5-72)

(10) Image is blurred.

Print example
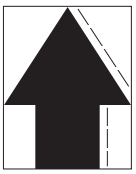

1. Table scanning

	Defective part	Check description	Corrective Action
1	Rail	Check that the carriage is smoothly operative.	If the carriage does not travel smoothly, remove foreign objects on the front and back optical rails.
2	Lamp unit	Check that the carriage is smoothly operative.	If the carriage does not travel smoothly because the lamp unit contacts with the frame, rectify.
3	Scanner wire drum	Confirm that a foreign object exists between the wire rope and the scanner wire drum.	If a foreign object exists, remove.
4	Mirror unit	Check that a foreign object exists in the grooves of the pulley.	If a foreign object exists in the grooves of the pulleys, remove.
5	Pulley	Check that a foreign object exists in the grooves of the pulleys other than above.	If a foreign object exists in the grooves of the pulleys, remove.
6	Wire rope	Confirm that the wire rope has a foreign object sticked or has a scuff.	If a foreign object exists on the wire rope, remove the foreign object. Or, if it is damaged, replace.

2. DP-scanning first (front) page

	Defective part	Check description	Corrective Action
1	DP conveying pulley	Check that the conveying pulley is smoothly operative.	If the conveying pulley does not rotate smoothly, re-asslemble the conveying roller and springs.
2	Adjustment height of the hinge portions of the DP	Check the height of the front and back portions of the DP.	If the front and back side of the DP is not leveled, adjust the hinge on the left side.
3	Install DP	Check how DP is mounted on the main unit.	If mounting to the main unit is improper, check positioning and secure the screws.
4	DP hinge	Check that the DP hinge is operative in both ascending and descending directions and kept open.	If the DP is not operative smoothly or is not held stably open, replace the hinges.

	Defective part	Check description	Corrective Action
5	DP document mat	Check the location the document mat of the DP is mounted.	Re-mount the document mat of the DP if it is hanged off.
6	Original document	Check that the leading edge of the original document is dog-eared.	If the leading edge of the original documet is dog-eared, straighten.
7	Scanning guide	Check if the scanning guide is distorted.	If the scanning guide deformed, replace.
8	Scopper guide	Check that the scopper guide is smoothly operative.	If the scopper guide does not rotate smoothly, re-install.
9	Conveying roller (before and after of scanning)	Check whether the conveying roller is dirty.	If the conveying roller is dirty, clean.
10	Drive belt	Check if the drive belt is jumping gear teeth.	If the drive belt is jumping gear teeth, re-mount the belt tensioner.

3. DP-scanning second (back) page (with a dual scan DP installed)

	Defective part	Check description	Corrective Action
1	DP conveying pulley	Check that the conveying pulley is smoothly operative.	If the conveying pulley does not rotate smoothly, re-asslemble the conveying roller and springs.
2	Install DP	Check how DP is mounted on the main unit.	If mounting to the main unit is improper, check positioning and secure the screws.
3	DP hinge	Check that the DP hinge is operative in both ascending and descending directions and kept open.	If the DP is not operative smoothly or is not held stably open, replace the hinges.
4	DP document mat	Check the location the document mat of the DP is mounted.	Re-mount the document mat of the DP if it is hanged off.
5	Original document	Check that the leading edge of the original document is dog-eared.	If the leading edge of the original documet is dog-eared, straighten.
6	Scanning roller	Check if the scanning roller is floated.	If the scanning roller is floated, re-assemble.
7	Conveying roller (before and after of scanning)	Check whether the conveying roller is dirty.	If the conveying roller is dirty, clean.
8	Scanning glass	Check if the scanning glass is floated.	If the scanning glass is floated, re-assemble.
9	Drive belt	Check if the drive belt is jumping gear teeth.	If the drive belt is jumping gear teeth, re-mount the belt tensioner.

4. DP-scanning second (back) page (with a reversed DP installed)

	Defective part	Check description	Corrective Action
1	DP conveying pulley	Check that the conveying pulley is smoothly operative.	If the conveying pulley does not rotate smoothly, re-asslemble the conveying roller and springs.
2	Adjustment height of the hinge portions of the DP	Check the height of the front and back portions of the DP.	If the front and back side of the DP is not leveled, adjust the hinge on the left side.
3	Install DP	Check how DP is mounted on the main unit.	If mounting to the main unit is improper, check positioning and secure the screws.
4	DP hinge	Check that the DP hinge is operative in both ascending and descending directions and kept open.	If the DP is not operative smoothly or is not held stably open, replace the hinges.
5	DP document mat	Check the location the document mat of the DP is mounted.	Re-mount the document mat of the DP if it is hanged off.
6	Original document	Check that the leading edge of the original document is dog-eared.	If the leading edge of the original documet is dog-eared, straighten.
7	Scanning guide	Check if the scanning guide is distorted.	If the scanning guide deformed, replace.
8	Scopper guide	Check that the scopper guide is smoothly operative.	If the scopper guide does not rotate smoothly, re-install.
9	Conveying roller (before and after of scanning)	Check whether the conveying roller is dirty.	If the conveying roller is dirty, clean.
10	Drive belt	Check if the drive belt is jumping gear teeth.	If the drive belt is jumping gear teeth, re-mount the belt tensioner.

(11) The leading edge of the image is consistently misaligned with the original.

Print example
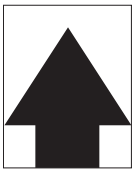

1. Table scanning

	Defective part	Check description	Corrective Action
1	Original document	Check if the original document is loaded correctly on the contact glass.	If the original document is not properly placed on the contact glass, place it correctly.
2	Secures the lamp unit	Confirm the oriention of the bracket that secures the wire rope and the lamp unit.	If the bracket that fixes the wire rope and the lamp unit is misaligned, align the bracket properly.
3	Adjustment of the scanner	Check the scanning adjustment of the scanner.	1. Perform maintenance mode U066, Front. (see page 1-3-58) 2. Perform maintenance mode U411, table(Chart1)_Input. (see page 1-3-173)
4	Home position sensor	Check the location the home position sensor is mounted.	Re-mount the home position sensor if it is hanged off.
5	Drive belt	Check if the tension of the drive belt is insufficient.	If the tension of the drive belt is insufficient, tense the belt.
6	Scanner wire drum	Check if the optical wire drum is loosely fixed.	If the optical wire drum is loosely fixed, secure the screws.
7	Scanner drive gear	Check that the scanner drive gear is loosely mounted.	If the scanner drive gear loosely mounted, secure the screw.

2. DP-scanning first (front) page

	Defective part	Check description	Corrective Action
1	Adjustment of the scanner	Check the scanning adjustment of DP scanning.	1. Perform maintenance mode U071, CIS Head. (see page 1-3-63) 2. Perform maintenance mode U411, DP Auto Adj. (only a dual scan DP installed) 3. Perform maintenance mode U411, FaceUp(Chart2)_Input. (see page 1-3-173)
2	Original conveying roller	Check if the conveyer roller is contaminated or worn.	If the conveying roller is dirty, clean the conveying roller and its axles.If the roller is worn out, replace.

	Defective part	Check description	Corrective Action
3	DP drive motor	Check whether the DP drive motor is fluctuated in rotation.	If the DP motor is fluctuated in rotation, apply grease with the drive gear. If no improvement is observed, replace the motor.

3. DP-scanning second (back) page (with a dual scan DP installed)

	Defective part	Check description	Corrective Action
1	Adjustment of the scanner	Check the scanning adjustment of DP scanning.	1. Perform maintenance mode U071, CIS Head. (see page 1-3-63) 2. Perform maintenance mode U411, DP Auto Adj. 3. Perform maintenance mode U411, FaceDown(Chart1)_All. (see page 1-3-173)

4. DP-scanning second (back) page (with a reversed DP installed)

	Defective part	Check description	Corrective Action
1	Adjustment of the scanner	Check the scanning adjustment of DP scanning.	1. Perform maintenance mode U071, Back Head. (see page 1-3-63)

(12) Part of image is missing.

Print example

1. Table scanning

	Defective part	Check description	Corrective Action
1	Original document	Check if the original document is loaded correctly on the contact glass.	If the original document is not properly placed on the contact glass, place it correctly.
2	Original document	1. Check that the size of the original document and the paper size match on the panel. 2. Check that the copying position has been automatically rotated.	1. If the sizes of the original document and the paper size do not match, manually set the proper paper size for the original document. 2. Check the paper size automatic detection switch and replace if faulty. 3. If the copying position is automatically rotated, deactivate automatic image rotation by the system menu.
3	Settings of Border removal	Check the value of border removal.	If a large value is given to bordere erasure, change it to a smaller value.
4	Contact glass	Check whether the contact glass is dirty.	If the contact glass is dirty, clean the contact glass, and the bottom part of the shading plate.
5	Contact glass assy	Check the location the contact glass is mounted.	Re-mount the contact glass if it is hanged off.
6	FFC cable CCD	Check the FFC cable between the CCD sensor and ISC PWB is properly connected. Or, verify conduction of the wire.	Reinsert the connector if its connection is loose. Or, if conduction is lot, replace the wire.
7	SATA cable ISC	Check the SATA cable between the ISC PWB and main PWB is properly connected. Or, verify conduction of the wire.	Reinsert the connector if its connection is loose. Or, if conduction is lot, replace the wire.
8	Lamp unit	Check the location the lamp unit is mounted.	Re-mount the lamp unit if it is hanged off.
9	ISC PWB	The ISC PWB is defective.	Replace the ISC PWB and perform U411. (see page 1-3-173)
10	CCD PWB	The CCD PWB is defective.	Replace the ISU and perform U411. (see page 1-3-173)

	Defective part	Check description	Corrective Action
11	Main PWB	The main PWB is defective.	Replace the main PWB.(see page 1-5-72)

2. DP-scanning first (front) page

	Defective part	Check description	Corrective Action
1	Original document	Check if the original document is loaded correctly in the DP.	If the original document is not properly placed in the DP, place it correctly.
2	Original document	1. Check that the size of the original document and the paper size match on the panel. 2. Check that the copying position has been automatically rotated.	1. If the sizes of the original document and the paper size do not match, manually set the proper paper size for the original document. 2. Check the paper size automatic detection switch and replace if faulty. 3. If the copying position is automatically rotated, deactivate automatic image rotation by the system menu.
3	Settings of Border removal	Check the value of border removal.	If a large value is given to bordere erasure, change it to a smaller value.
4	Contact glass	Check whether the contact glass is dirty.	If the contact glass is dirty, clean the contact glass, and the bottom part of the shading plate.
5	FFFC cable CCD	Check the FFC cable between the CCD sensor and ISC PWB is properly connected. Or, verify conduction of the wire.	Reinsert the connector if its connection is loose. Or, if conduction is lot, replace the wire.
6	SATA cable ISC	Check the SATA cable between the ISC PWB and main PWB is properly connected. Or, verify conduction of the wire.	Reinsert the connector if its connection is loose. Or, if conduction is lot, replace the wire.
7	ISC PWB	The ISC PWB is defective.	Replace the ISC PWB and perform U411. (see page 1-3-173)
8	CCD PWB	The CCD PWB is defective.	Replace the ISU and perform U411. (see page 1-3-173)
9	Main PWB	The main PWB is defective.	Replace the main PWB.(see page 1-5-72)

3. DP-scanning second (back) page (with a dual scan DP installed)

	Defective part	Check description	Corrective Action
1	Original document	Check if the original document is loaded correctly in the DP.	If the original document is not properly placed in the DP, place it correctly.
2	Original document	Check the size of the original document and its reference size.	If the size of the original document and its reference size do not match, manually set the document size.

	Defective part	Check description	Corrective Action
3	Settings of Border removal	Check the value of border removal.	If a large value is given to bordere erasure, change it to a smaller value.
4	DP_SATA cable	Check the FFC cable between the SHD PWB and I/F PWB is properly connected. Or, verify conduction of the wire.	Reinsert the connector if it its connection is loose. Or, if conduction is lot, replace the wire.
5	DP_SHD PWB	Check the CIS and the SHD PWB is properly connected.	Reinsert the connector if the PWB was loosely inserted.If not cured, replace the PWB.
6	DP_CIS	CIS is defective.	Replace the CIS and perform U091 and U411. (see page 1-3-71,1-3-173)
7	Main PWB	The main PWB is defective.	Replace the main PWB.(see page 1-5-72)

4. DP-scanning second (back) page (with a reversed DP installed)

	Defective part	Check description	Corrective Action
1	Original document	Check if the original document is loaded correctly in the DP.	If the original document is not properly placed in the DP, place it correctly.
2	Original document	Check the size of the original document and its reference size.	If the size of the original document and its reference size do not match, manually set the document size.
3	Settings of Border removal	Check the value of border removal.	If a large value is given to bordere erasure, change it to a smaller value.
4	Contact glass	Check whether the contact glass is dirty.	If the contact glass is dirty, clean the contact glass, and the bottom part of the shading plate.
5	FFC cable CCD	Check the FFC cable between the CCD sensor and ISC PWB is properly connected. Or, verify conduction of the wire.	Reinsert the connector if its connection is loose. Or, if conduction is lot, replace the wire.
6	SATA cable ISC	Check the SATA cable between the ISC PWB and main PWB is properly connected. Or, verify conduction of the wire.	Reinsert the connector if its connection is loose. Or, if conduction is lot, replace the wire.
7	ISC PWB	The ISC PWB is defective.	Replace the ISC PWB and perform U411. (see page 1-3-173)
8	CCD PWB	The CCD PWB is defective.	Replace the ISU and perform U411. (see page 1-3-173)
9	Main PWB	The main PWB is defective.	Replace the main PWB.(see page 1-5-72)

(13) Image is out of focus.

Print example

1. Table scanning and DP-scanning first (front) page

	Defective part	Check description	Corrective Action
1	Original document	Check whether the original document is wavy.	If the original document is wavy, straighten.Or, replace the original document.
2	Contact glass	Check whether the contact glass is dew condensed.	If the contact glass is dew condensed, remove the dew.
3	Mirror	Check whether the mirror is dew condensed.	If the mirrors are dew-condensed, remove the dew.
4	Lens	Check whether the lens is dew condensed.	If the lens is dew condensed, remove the dew.
5	CCD sensor	Check whether the CCD sensor glass is dew condensed.	If the CCD sensor glass is dew condensed, remove the dew.
6	Adjustment of the scanner	Check the automatic adjustment of the scanner.	Perform maintenance mode U411, table(Chart1)_All. (see page 1-3-173)
7	ISU	Confirm the position of the lens and the CCD sensor.	If the lenses and the CCD sensor are misaligned, replace the ISU and perform U411.
8	ISC PWB	The ISC PWB is defective.	Replace the ISC PWB and perform U411. (see page 1-3-173)
9	Main PWB	The main PWB is defective.	Replace the main PWB.(see page 1-5-72)

2. DP-scanning second (back) page (with a dual scan DP installed)

	Defective part	Check description	Corrective Action
1	DP_CIS glass	Check whether the CIS glass is dew condensed.	If the CIS glass is dew condensed, remove the dew.
2	DP_CIS glass	Check whether the CIS glass is contaminated.	If the CIS glass is contaminated, clean the CIS glass. If it has a scuff, replace.
3	White-reference roller(Counter the CIS)	Check that the white-reference roller is smoothly operative.	If the white-reference roller does not rotate smoothly, re-install.

	Defective part	Check description	Corrective Action
4	Adjustment of the scanner	Check the automatic adjustment of the scanner.	Perform maintenance mode U411, DP FaceDown(Chart1)_All. (see page 1-3-173)
5	DP_CIS unit	Check the location the CIS unit is mounted.	Re-mount the CIS unit if it is hanged off.
6	DP_CIS	CIS is defective.	Replace the CIS and perform U091 and U411. (see page 1-3-71,1-3-173)

3. DP-scanning second (back) page (with a reversed DP installed)

	Defective part	Check description	Corrective Action
1	Contact glass	Check whether the contact glass is dew condensed.	If the contact glass is dew condensed, remove the dew.
2	Mirror	Check whether the mirror is dew condensed.	If the mirrors are dew-condensed, remove the dew.
3	Lens	Check whether the lens is dew condensed.	If the lens is dew condensed, remove the dew.
4	CCD sensor	Check whether the CCD sensor glass is dew condensed.	If the CCD sensor glass is dew condensed, remove the dew.
5	Adjustment of the scanner	Check the automatic adjustment of the scanner.	Perform maintenance mode U411, Table(Chart1)_All. (see page 1-3-173)
6	ISU	Confirm the position of the lens and the CCD sensor.	If the lenses and the CCD sensor are misaligned, replace the ISU and perform U411. (see page 1-3-173)
7	ISC PWB	The ISC PWB is defective.	Replace the ISC PWB and perform U411. (see page 1-3-173)
8	Main PWB	The main PWB is defective.	Replace the main PWB.(see page 1-5-72)

(14) Image center does not align with the original center.

Print example
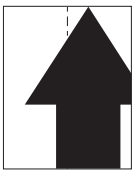

1. Table scanning

	Defective part	Check description	Corrective Action
1	Original document	Check if the original document is loaded correctly on the contact glass.	If the original document is not properly placed on the contact glass, place it correctly.
2	Contact glass assy	Check the location the contact glass is mounted.	Re-mount the contact glass if it is hanged off.
3	Adjustment of the scanner	Check the scanning adjustment of the scanner.	1. Perform maintenance mode U067, Front.(see page 1-3-58) 2. Perform maintenance mode U411, Table(Chart1)_Input. (see page 1-3-173)

2. DP-scanning first (front) page

	Defective part	Check description	Corrective Action
1	Original document	Check if the original document is loaded correctly in the DP.	If the original document is not properly placed in the DP, place it correctly.
2	Adjustment of the scanner	Check the scanning adjustment of DP scanning.	1. Perform maintenance mode U072, Front. 2. Perform maintenance mode U411, DP Auto Adj. (If a duplex scanning DP is installed.) 3. Perform maintenance mode U411, DP FaceUp(Chart2)_Input. (see page 1-3-173)

3. DP-scanning second (back) page (with a dual scan DP installed)

	Defective part	Check description	Corrective Action
1	Original document	Check if the original document is loaded correctly in the DP.	If the original document is not properly placed in the DP, place it correctly.

	Defective part	Check description	Corrective Action
2	Adjustment of the scanner	Check the scanning adjustment of DP scanning.	1. Perform maintenance mode U072, CIS . (see page 1-3-65) 2. Perform maintenance mode U411, DP Auto Adj. 3. Perform maintenance mode U411, DP FaceDown (Chart1)_All. (see page 1-3-173)

4. DP-scanning second (back) page (with a reversed DP installed)

	Defective part	Check description	Corrective Action
1	Original document	Check if the original document is loaded correctly in the DP.	If the original document is not properly placed in the DP, place it correctly.
2	Adjustment of the scanner	Check the scanning adjustment of DP scanning.	1. Perform maintenance mode U072, Back . (see page 1-3-65)

(15) Shifted colors

Print example
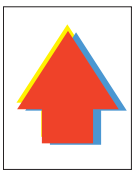

1. Table scanning

	Defective part	Check description	Corrective Action
1	Rail	Check that the carriage is smoothly operative.	If the carriage does not travel smoothly, remove foreign objects on the front and back optical rails.
2	Lamp unit	Check that the carriage is smoothly operative.	If the carriage does not travel smoothly because the lamp unit contacts with the frame, rectify.
3	Scanner wire drum	Confirm that a foreign object exists between the wire rope and the scanner wire drum.	If a foreign object exists, remove.
4	Mirror unit	Check that a foreign object exists in the grooves of the pulley.	If a foreign object exists in the grooves of the pulleys, remove.
5	Pulley	Check that a foreign object exists in the grooves of the pulleys other than above.	If a foreign object exists in the grooves of the pulleys, remove.

	Defective part	Check description	Corrective Action
6	Wire rope	Confirm that the wire rope has a foreign object sticked or has a scuff.	If a foreign object exists on the wire rope, remove the foreign object. Or, if it is damaged, replace.

2. DP-scanning first (front) page

	Defective part	Check description	Corrective Action
1	DP conveying pulley	Check that the conveying pulley is smoothly operative.	If the conveying pulley does not rotate smoothly, re-asslemble the conveying roller and springs.
2	Adjustment height of the hinge portions of the DP.	Check the height of the front and back portions of the DP.	If the front and back side of the DP is not leveled, adjust the hinge on the left side.
3	Install DP	Check how DP is mounted on the main unit.	If mounting to the main unit is improper, check positioning and secure the screws.
4	DP hinge	Check that the DP hinge is operative in both ascending and descending directions and kept open.	If the DP is not operative smoothly or is not held stably open, replace the hinges.
5	DP document mat	Check the location the document mat of the DP is mounted.	Re-mount the document mat of the DP if it is hanged off.
6	Original document	Check that the leading edge of the original document is dog-eared.	If the leading edge of the original documet is dog-eared, straighten.
7	Scanning guide	Check if the scanning guide is distorted.	If the scanning guide deformed, replace.
8	Scopper guide	Check that the scopper guide is smoothly operative.	If the scopper guide does not rotate smoothly, re-install.
9	Conveying roller (before and after portions of scanning)	Check whether the conveying roller is dirty.	If the conveying roller is dirty, clean.
10	Drive belt	Check if the drive belt is jumping gear teeth.	If the drive belt is jumping gear teeth, re-mount the belt tensioner.

3. DP-scanning second (back) page (with a dual scan DP installed)

	Defective part	Check description	Corrective Action
1	DP conveying pulley	Check that the conveying pulley is smoothly operative.	If the conveying pulley does not rotate smoothly, re-asslemble the conveying roller and springs.
2	Install DP	Check how DP is mounted on the main unit.	If mounting to the main unit is improper, check positioning and secure the screws.

	Defective part	Check description	Corrective Action
3	DP hinge	Check that the DP hinge is operative in both ascending and descending directions and kept open.	If the DP is not operative smoothly or is not held stably open, replace the hinges.
4	DP document mat	Check the location the document mat of the DP is mounted.	Re-mount the document mat of the DP if it is hanged off.
5	Original document	Check that the leading edge of the original document is dog-eared.	If the leading edge of the original documet is dog-eared, straighten.
6	Scanning roller	Check if the scanning roller is floated.	If the scanning roller is floated, re-assemble.
7	Conveying roller (before and after portions of scanning)	Check whether the conveying roller is dirty.	If the conveying roller is dirty, clean.
8	Scanning glass	Check if the scanning guide is floated.	If the scanning glass is floated, re-assemble.
9	Drive belt	Check if the drive belt is jumping gear teeth.	If the drive belt is jumping gear teeth, re-mount the belt tensioner.

4. DP-scanning second (back) page (with a reversed DP installed)

	Defective part	Check description	Corrective Action
1	DP conveying pulley	Check that the conveying pulley is smoothly operative.	If the conveying pulley does not rotate smoothly, re-asslemble the conveying roller and springs.
2	Adjustment height of the hinge portions of the DP	Check the height of the front and back portions of the DP.	If the front and back side of the DP is not leveled, adjust the hinge on the left side.
3	Install DP	Check how DP is mounted on the main unit.	If mounting to the main unit is improper, check positioning and secure the screws.
4	DP hinge	Check that the DP hinge is operative in both ascending and descending directions and kept open.	If the DP is not operative smoothly or is not held stably open, replace the hinges.
5	DP document mat	Check the location the document mat of the DP is mounted.	Re-mount the document mat of the DP if it is hanged off.
6	Original document	Check that the leading edge of the original document is dog-eared.	If the leading edge of the original documet is dog-eared, straighten.
7	Scanning guide	Check if the scanning guide is distorted.	If the scanning guide deformed, replace.

	Defective part	Check description	Corrective Action
8	Scopper guide	Check that the scopper guide is smoothly operative.	If the scopper guide does not rotate smoothly, re-install.
9	Conveying roller (before and after portions of scanning)	Check whether the conveying roller is dirty.	If the conveying roller is dirty, clean.
10	Drive belt	Check if the drive belt is jumping gear teeth.	If the drive belt is jumping gear teeth, re-mount the belt tensioner.

(16) Moire

Print example

1. Table scanning

	Defective part	Check description	Corrective Action
1	Settings of print quality mode	Confirm whether the moire varies depending on print quality mode.	Switch print quality mode if the moire varies depending on print quality mode. 1. Execute printing in text or print mode. 2. Reduce the sharpness (to minus).
2	Original document	Check if moire is observed along the direction of scanning of the original document.	If moire is observed, place the original document after rotating it 90-degree.
3	Scaling factor	Happens with the zoom ratio of 100%.	Reduce the real-size ratio of the main scan direction by U065.
4	Adjustment of the scanner	Check the automatic adjustment of the scanner.	Perform maintenance mode U411, Table(Chart1)_All. (see page 1-3-173)

2. DP-scanning first (front) page

	Defective part	Check description	Corrective Action
1	Settings of print quality mode	Confirm whether the moire varies depending on print quality mode.	Switch print quality mode if the moire varies depending on print quality mode. 1. Execute printing in text or print mode. 2. Reduce the sharpness (to minus).
2	Adjustment of the scanner	Check the automatic adjustment of the scanner.	Perform maintenance mode U411, Table(Chart1)_All. (see page 1-3-173)

3. DP-scanning second (back) page (with a dual scan DP installed)

	Defective part	Check description	Corrective Action
1	Settings of print quality mode	Confirm whether the moire varies depending on print quality mode.	Switch print quality mode if the moire varies depending on print quality mode. 1. Execute printing in text or print mode. 2. Reduce the sharpness (to minus).
2	Adjustment of the scanner	Check the automatic adjustment of the scanner.	Perform maintenance mode U411, DP FaceDown(Chart1)_All. (see page 1-3-173)

4. DP-scanning second (back) page (with a reversed DP installed)

	Defective part	Check description	Corrective Action
1	Settings of print quality mode	Confirm whether the moire varies depending on print quality mode.	Switch print quality mode if the moire varies depending on print quality mode. 1. Execute printing in text or print mode. 2. Reduce the sharpness (to minus).
2	Adjustment of the scanner	Check the automatic adjustment of the scanner.	Perform maintenance mode U411, Table(Chart1)_All. (see page 1-3-173)

(17) Skewed image

Print example
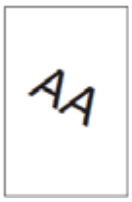

1. Table scanning

	Defective part	Check description	Corrective Action
1	Original document	Check if the original document is fed askew.	If the original document is not placed askew on the contact glass, place it correctly.
2	Adjustment of height of main unit and scanner unit	Check the scanner unit is quite level.	If the scanner unit is not quite level, perform the height adjustment of the entirer scanner unit.
3	Lamp unit	Check the location the lamp unit is mounted.	Re-mount the lamp unit if it is hanged off.

2. DP-scanning first (front) page

	Defective part	Check description	Corrective Action
1	Original document	Check if the original document has creases or foldings or wrinkles.	If the original document has foldings or creases, remove them.
2	DP paper feed	Check if the original document is fed askew.	If the original document is fed askew, set the width guides correctly.
3	Lamp unit	Check the location the lamp unit is mounted.	Re-mount the lamp unit if it is hanged off.

	Defective part	Check description	Corrective Action
4	DP feed roller	Check whether the feed roller is dirty.	If the feed roller is dirty, clean.Or, if not cured, replace the feed roller.
5	DP regist roller	Check whether the DP regist roller is dirty.	If the DP regist roller is dirty, clean.
6	DP regist pulley	Check that the DP regist pulley is smoothly operative.	If the DP regist pulley does not rotate smoothly, re-install.
7	Adjustment amount of slack of the original documen	Check the amount of slack of the original document when it reaches at the regist.	If the amount of the slack of the original document roller improper is perform maintenance mode U942, DP slack settings.(see page 1-3-231)
8	Original document setting	Check that the cursor fits with the original document.	Align the cursor to fit with the original document, if necessary.
9	Adjustment posi-tions of the hinge	Check the front and back adjust-ment positions of the right hinge.	If the front and back adjustment positions of the right hinge are improper, perform adjustment.

3. DP-scanning second (back) page (with a dual scan DP installed)

	Defective part	Check description	Corrective Action
1	Original document	Check if the original document has creases or foldings or wrinkles.	If the original document has foldings or creases, remove them.
2	DP feed roller	Check whether the DP feed roller is dirty.	If the DP feed roller is dirty, clean.
3	DP regist roller	Check whether the DP regist roller is dirty.	If the DP regist roller is dirty, clean.
4	DP regist pulley	Check that the DP regist pulley is smoothly operative.	If the DP regist pulley does not rotate smoothly, re-install.
5	Adjustment amount of slack of the original documen	Check the amount of slack of the original document when it reaches at the regist.	If the amount of the slack of the original document roller improper is perform maintenance mode U942, DP slack settings.(see page 1-3-231)
6	Original document setting	Check that the cursor fits with the original document.	Align the cursor to fit with the original document, if necessary.
7	Install the CIS	Check whether CIS is loosely mounted.	Re-mount the CIS unit if it is hanged off.

4. DP-scanning second (back) page (with a reversed DP installed)

	Defective part	Check description	Corrective Action
1	Original document	Check if the original document has creases or foldings or wrinkles.	If the original document has foldings or creases, remove them.
2	Lamp unit	Check the location the lamp unit is mounted.	Re-mount the lamp unit if it is hanged off.
3	DP feed roller	Check whether the feed roller is dirty.	If the feed roller is dirty, clean.Or, if not cured, replace the feed roller.
4	DP regist roller	Check whether the DP regist roller is dirty.	If the DP regist roller is dirty, clean.
5	DP regist pulley	Check that the DP regist pulley is smoothly operative.	If the DP regist pulley does not rotate smoothly, re-install.
6	Adjustment amount of slack of the original documen	Check the amount of slack of the original document when it reaches at the regist.	If the amount of the slack of the original document roller improper is perform maintenance mode U942, DP slack settings.(see page 1-3-231)
7	Original document setting	Check that the cursor fits with the original document.	Align the cursor to fit with the original document, if necessary.
8	Adjustment posi-tions of the hinge	Check the front and back adjust-ment positions of the right hinge.	If the front and back adjustment positions of the right hinge are improper, perform adjustment.
9	Main PWB	The main PWB is defective.	Replace the main PWB.(see page 1-5-72)

(18) Abnormal image

Print example

1. Table scanning

	Defective part	Check description	Corrective Action
1	FFC cable CCD	Check the FFC cable between the CCD sensor and ISC PWB is properly connected. Or, verify conduction of the wire.	Reinsert the connector if its connection is loose. Or, if conduction is lot, replace the wire.

	Defective part	Check description	Corrective Action
2	SATA cable ISC	Check the SATA cable between the ISC PWB and main PWB is properly connected. Or, verify conduction of the wire.	Reinsert the connector if its connection is loose. Or, if conduction is lot, replace the wire.
3	HDD	Check the wires to the HDD in conduction. Check the connector for connection. Check the connector pins for distortion.	1. Reinsert the connector if its connection is loose. 2. Check the wires and connetctors, and replace if faulty. 3. Replace the HDD or the SATA wire.
4	ISC PWB	The ISC PWB is defective.	Replace the ISC PWB and perform U411. (see page 1-3-173)
5	CCD PWB	The CCD PWB is defective.	Replace the ISU and perform U411. (see page 1-3-173)
6	Main PWB	The main PWB is defective.	Replace the main PWB.(see page 1-5-72)

2. DP-scanning first (front) page

	Defective part	Check description	Corrective Action
1	FFC cable CCD	Check the FFC cable between the CCD sensor and ISC PWB is properly connected. Or, verify conduction of the wire.	Reinsert the connector it its connection is loose. Or, if conduction is lot, replace the wire.
2	SATA cable ISC	Check the SATA cable between the ISC PWB and main PWB is properly connected. Or, verify conduction of the wire.	Reinsert the connector if its connection is loose. Or, if conduction is lot, replace the wire.
3	HDD	Check the wires to the HDD in conduction. Check the connector for connection. Check the connector pins for distortion.	1. Reinsert the connector if its connection is loose. 2. Check the wires and connetctors, and replace if faulty. 3. Replace the HDD or the SATA wire.
4	ISC PWB	The ISC PWB is defective.	Replace the ISC PWB and perform U411. (see page 1-3-173)
5	CCD PWB	The CCD PWB is defective.	Replace the ISU and perform U411. (see page 1-3-173)
6	Main PWB	The main PWB is defective.	Replace the main PWB.(see page 1-5-72)

3. DP-scanning second (back) page (with a dual scan DP installed)

	Defective part	Check description	Corrective Action
1	DP_SHD PWB	Check the CIS and the SHD PWB is properly connected.	Reinsert the connector if the PWB was loosely inserted.If not cured, replace the PWB.

	Defective part	Check description	Corrective Action
2	DP_SATA cable	Check the FFC cable between the SHD PWB and I/F PWB is properly connected. Or, verify conduction of the wire.	Reinsert the connector if its connection is loose. Or, if conduction is lot, replace the wire.
3	DP_CIS	CIS is defective.	Replace the CIS and perform U091 and U411. (see page 1-3-71,1-3-173)
4	Main PWB	The main PWB is defective.	Replace the main PWB.(see page 1-5-72)

4. DP-scanning second (back) page (with a reversed DP installed)

	Defective part	Check description	Corrective Action
1	FFC cable CCD	Check the FFC cable between the CCD sensor and ISC PWB is properly connected. Or, verify conduction of the wire.	Reinsert the connector if its connection is loose. Or, if conduction is lot, replace the wire.
2	SATA cable ISC	Check the SATA cable between the ISC PWB and main PWB is properly connected. Or, verify conduction of the wire.	Reinsert the connector if its connection is loose. Or, if conduction is lot, replace the wire.
3	HDD	Check the wires to the HDD in conduction. Check the connector for connection. Check the connector pins for distortion.	1. Reinsert the connector if its connection is loose. 2. Check the wires and connetctors, and replace if faulty. 3. Replace the HDD or the SATA wire.
4	ISC PWB	The ISC PWB is defective.	Replace the ISC PWB and perform U411. (see page 1-3-173)
5	CCD PWB	The CCD PWB is defective.	Replace the ISU and perform U411. (see page 1-3-173)
6	Main PWB	The main PWB is defective.	Replace the main PWB.(see page 1-5-72)

1-4-6 Poor image (Image rendering problems: Mono-color printer engine)

(1) No image appears (entirely white).

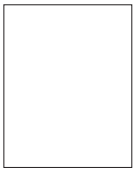

See page1-4-257

(2) No image appears (entirely black).

See page1-4-259

(3) Image is too light.

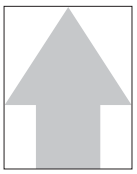

See page1-4-260

(4) The background is colored.

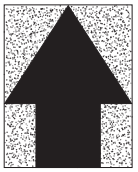

See page1-4-262

(5) White streaks are printed vertically.

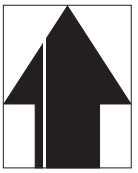

See page1-4-264

(6) Black or color streaks appear longitudinally.

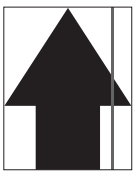

See page1-4-265

(7) Black, white or color streaks appear horizontally.

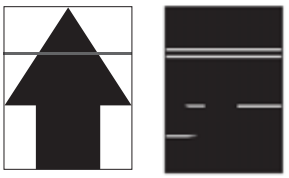

See page1-4-266

(8) Uneven density longitudinally.

See page1-4-267

(9) Uneven density horizontally.

See page1-4-268

(10) Black or color dots appear on the image.

See page1-4-268

(11) Offset occurs.

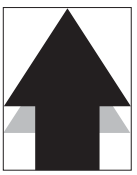

See page1-4-269

(12) Part of Image is missing.

See page1-4-270

(13) Image is out of focus.

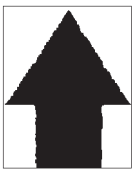

See page1-4-270

(14) Poor grayscale reproducibility.

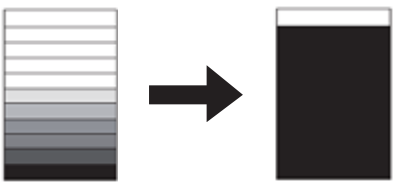

See page1-4-271

(15) Unevenly repeating horizontal streaks in the printed objects.Colored spots in the printed objects.

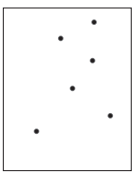

See page1-4-271

(16) Grainy image.

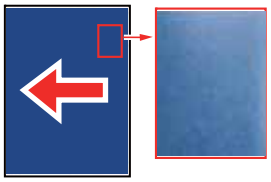

See page1-4-272

(1) No image appears (entirely white).

Print example	Cause of trouble
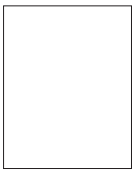	1. No or defective developing bias output. 2. Failure of the rotation of the developing roller. 3. Defective primary transfer. 4. Laser is not dispersed from the laser scanner unit (LSU). 5. The drum does not rotate.

	Defective part	Check description	Corrective Action
1	Developing unit	Executing U089 to generate four-color PGs and check the following with the color which is defective:	
		Check whether the developer drive gear is damaged.	If the gear is damaged, replace the developer unit.
		Check whether the developing roller is rotated by hand.	If the developer unit is in fault, replace the developer unit. (see page 1-5-57)
		Check contamination and deformation on the terminals of the developer unit or the high-voltage PWB1.	If the connecting terminals are dirty, clean. If the connecting terminals are deformed, correct for a proper conduction.
2	High-voltage PWB1	Check the connection of the connectors in the high-voltage PWB1. Or, verify conduction of the wires.	Reinsert the connector if its connection is loose. Replace the cable if it has no conduction. High voltage PWB 1 (YC1, 2) and engine PWB (YC16) High voltage PWB 1 (YC3, 4) and engine PWB (YC17)
		Check if the developing bias value at its default by U140.	1. If the value obtaines by U140 does not comfirm to the default value, reset it to the default (see page 1-3-99). 2. Replace the high-voltage PWB1.
3	High-voltage PWB2 (Transfer)	Check contamination and deformation on the terminals of the primary transfer roller and the high-voltage PWB2.	1. If the connecting terminals are dirty, clean. 2. If the connecting terminals are deformed, correct for a proper conduction.
		Transfer current supplied by the high-voltage PWB2 (transfer) is faulty.	Replace the high-voltage PWB2.

	Defective part	Check description	Corrective Action
4	Laser scanner unit (LSU)	Check the connection of the connectors. Or, verify conduction of the wires.	1. Reinsert the FFC wire if it its connection is loose. Replace the cable if it has no conduction. 2. Replace the LSU (see page 1-5-43)
5	Engine PWB	A control signal is not derived from the engine PWB.	Replace the enging PWB. (see page 1-5-80)

(2) No image appears (entirely black).

Print example	Cause of trouble
	1. No main charging. 2. The laser from the LSU is activated simultaneously for all colors.

	Defective part	Check description	Corrective Action
1	Charging roller	Check whether the charging roller is properly mounted.	If the charging roller is not fixed properly, fix the roller properly.
		Check whether the connecting terminals of the charging roller and high-voltage PWB1 are deformed.	If the connecting terminals are deformed, correct for a proper conduction.
2	High-voltage PWB1	Check the connection of the connectors. Or, verify conduction of the wires.	Reinsert the connector if it its connection is loose. Replace the cable if it has no conduction. High voltage PWB 1 (YC1, 2) and engine PWB (YC16) High voltage PWB 1 (YC3, 4) and engine PWB (YC17)
		Main charging current supplied by the high-voltage PWB1 is faulty.	Replace the high-voltage PWB1. (see page 1-5-88)
3	Laser scanner unit (LSU)	Switching on and off the laser diode on the LSU PWB is out of control.	Replace the LSU. (see page 1-5-43)
4	Engine PWB	The engine PWB is detective.	Replace the engine PWB.(see page 1-5-80)
5	Main PWB	The main PWB is defective.	Replace the main PWB.(see page 1-5-80)

(3) Image is too light.

Print example	Cause of trouble
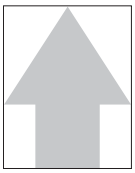	1. Variance in environments (dew formation). 2. Toner is under supplied, or deteriorated in quality.(Under charged) 3. The volatage of the developing bias is too low. 4. The volatage of the primary transfer current is too low. 5. The power of LSU laser is too low. 6. The surface potential of the drum is too high.

	Defective part	Check description	Corrective Action
1	Drum unit	Check that the drum has dew condensation.	If a dew condensation is observed, porform drum refreshing. (System Menu >Adjustment / Maintenance)
2	Developer unit	Executing U089 to generate four-color PGs and check the following with the color which is defective: (see page 1-3-70)	
		Check the value of U155. (see page 1-3-107)	If the value is less than 542, perform U132 to forcibly replenish toner. (see page 1-3-96)
			Replace the developer unit if the output is kept too low.
		Check if the device executed a low-density printing for a prolonged period.	1. If the device was executing a low-density printing for a prolonged period, perform developing refreshing. (System Menu >Adjustment / Maintenance) 2. If developer refreshing does not correct the problem, perform the following Execute maintenance modes U464 Calibration and U410 Grayscale Adjustment. (see page 1-3-197,1-3-172)
		Check if the connecting terminals for developer bias are deformed.	If the connecting terminals are deformed, correct for a proper conduction.
		Check the value of U140 MagDC. (see page 1-3-99)	If the MagDC value is in excess of the upper limit by U140, perform U464 to set the Thickness Target Value from 0 to +30. Execute maintenance modes U464 Calibration.(see page 1-3-197)

	Defective part	Check description	Corrective Action
3	Toner container	Shake the toner container up and down approx. 10 times, and check the following: 1. Check the messege of the toner replenishing is shown. 2. Check whether the toner supply inlet is open.	If the message prompting toner replenishing is shown, the toner inlet is not open, replace the toner container.
4	Toner supply motor	Execute U135 to check the revolution of the toner supply motor. (see page 1-3-97)	If the toner supply motor does not rotate, replace.
5	High-voltage PWB1	Check if the developing bias value is at its default by U140.	1. If the value obtained by U140 does not conform to the default value, reset it to the default. (see page 1-3-99) 2. Replace the high-voltage PWB1.
6	Intermediate transfer belt unit	1. Check whether the connecting terminals are deformed. 2. Check the value of the U106. (see page 1-3-80)	1. If the connecting terminals are deformed, correct for a proper conduction. 2. If the value obtained by U106 does not conform to the default value, reset it to the default. 3. Replace the intermediate transfer belt unit.
7	High-voltage PWB2	The primary transfer current supplied by the high-voltage PWB2 is faulty.	Replace the high-voltage PWB2.
8	LSU	1. The laser diode on the LSU APC PWB is out of control. 2. Check whether the internal mirrors are contaminated.	Replace the LSU. (Perform U119) (see page 1-3-92)
9	Drum unit	1. Check if the discharging lamp is dirty. 2. Check whether it is lit.	1. If the discharging lamp is dirty, clean. 2. If not cured, or it does not light, replace the drum unit. (Perform U119)(see page 1-3-92)
10	Engine PWB	The engine PWB is defective.	Replace the enging PWB. (see page 1-5-80)

(4) The background is colored.

Print example	Cause of trouble
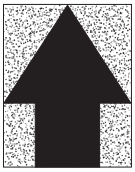	1. Toner is deteriorated in quality (under-charged). 2. Toner is over-supplied. 3. Developing bias is too high. 4. The layer of toner is too thick on the developing roller (too much toner). 5. The surface potential of the drum is too low (under low temperature environment).

	Defective part	Check description	Corrective Action
1	Developer unit	Executing U089 to generate four-color PGs and check the following with the color which is defective: (see page 1-3-70)	
		1. Check whether the device was being continuously operated with high density, under a hot environment.	If the device was being continuously operated with high density under a hot environment, perform developing refreshing. (System Menu >Adjustment / Maintenance)
		2. Check the value of the U140 developer bias. (see page 1-3-99)	If the density ID is too low at calibration, execute maintenance modes U464 Calibration and U410 Grascale Adjustment. (see page 1-3-197,1-3-172)
		3. Check contamination and deformation on the connecting terminals for developer bias.	If the connecting terminals for developer bias are dirty, clean.If the connecting terminals are deformed, correct for a proper conduction.
		4. Check the toner sensor output by U155. (see page 1-3-107)	If the toner sensor output obtained by U155 is 100 or less, replace the developer unit. (see page 1-5-57)
2	Drum unit	1. Execute U139 to check the internal temperature. (see page 1-3-98)	If the internal temperature is 16°C/ 61°F or less, continue printing until the temperature reaches 16°C/ 61°F or higher.
		2. Check the value of the main high voltage by U100. (see page 1-3-74)	Fix the inner unit properly. (see page 1-5-55)
		3. Check that the ground terminal is not contaminated or the conductive grease is not applied with the connecting terminals.	If the connecting terminals are dirty, clean. If the amount of the grease applied is too small, apply conductive grease to the bearing on the receiver side of the drum drive axle. Replace the drum unit. (Perform U119)
		4. Check if the charging roller is dirty.	If the charging roller is dirty, clean.Or replace it. (Perform U930)(see page 1-3-229)

	Defective part	Check description	Corrective Action
3	High-voltage PWB1	The developing bias and charg-ing current supplied by the high-voltage PWB1 is faulty.	Replace the high-voltage PWB1. (see page 1-5-88)
4	Engine PWB	The engine PWB is defective.	Replace the enging PWB. (see page 1-5-80)
5	Toner supply motor	Check if the toner supply motor is continuously rotating.Check wires for shortcircuiting.	If the harnesses are short-circuited and the toner motor is continuously rotating, replace the toner supply motor.

(5) White streaks are printed vertically.

Print example	Cause of trouble
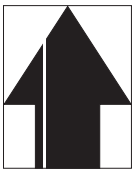	1. Dirty LSU slit glass. 2. Foreign objects inside the developer unit. 3. Internal contamination 4. Dirty drum unit inside.

	Defective part	Check description	Corrective Action
1	LSU	Check if the LSU slit glass is dirty.	If the LSU slit glass is dirty, perform laser scanner cleaning.
2	Developer unit	Executing U089 to generate four-color PGs. (see page 1-3-70)	Replace the developer unit in fault. (see page 1-5-57)
3	Light path between the LSU and the drum	Check if there are dusts, dirts, or toner obstructing the light paths.	If a foreign object exists on the frame or the sealings between the developer unit and the drum unit, remove.
4	Drum unit	Check if the charging roller is dirty.	If the charging roller is dirty,clean. Or replace it. (Perform U930) (see page 1-5-57)
		Check if the discharging lamp is dirty.	If the discharging lamp is dirty,clean.

(6) Black or color streaks appear longitudinally.

Print example	Cause of trouble
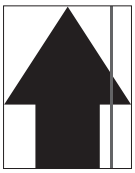	1. Dirty charging roller 2. Flawed or dirty drum unit 3. Damaged or paper dust bitten cleaning blade

	Defective part	Check description	Corrective Action
1	Charging roller unit	Check if there is no toner streaks on the surface of the charging roller.	If the charging roller has streaks on its surface, clean the charging roller. Replace the charging roller, if necessary. (Perform U930) (see page 1-3-229)
2	Drum unit	Check if the drum is dirty on its surface.	Execute drum refreshing. (System Menu >Adjustment / Maintenance)
		Check if the drum has scratches. Check whether the edge of the cleaning blade is damaged. Check whether it is abraded or paper dusts are accumulated. Check whether toner is accumulated in the cleaning section.	Replace the drum unit. (Perform U119) (see page 1-5-57)

(7) Black, white or color streaks appear horizontally.

Print example	Cause of trouble
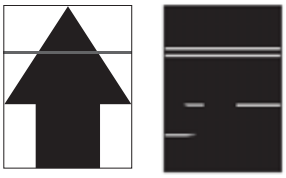	1. Dirty developer unit or terminals 2. Flawed or dirty drum unit Improper grounding 3. Dirty primary transfer roller terminals

	Defective part	Check description	Corrective Action
1	Developer unit	1. Check the print image on paper has a problem at an interval equivalent to the circumference of the developing roller (39mm). 2. Check that the developing roller is dirty at its ends or at the developing bias tab.	1. If the ends of the developing roller and the connecting terminals for developer bias are dirty, clean. 2. Replace the developer unit. (see page 1-5-57)
2	Drum unit	1. Check the print image on paper has a problem at an interval equivalent to the circumference of the drum (94mm).	Execute drum refreshing. (System Menu >Adjustment / Maintenance)
		2. Check if the drum has scratches.	Replace the drum unit. (Perform U119) (see page 1-5-57)
		3. Check the grounding tab of the drum or the drum drive shaft.	1. Check how the inner unit is mounted, and correct, if necessary. 2. Replace the drum unit. (Perform U119) (see page 1-5-57)
4	Primary transfer roller (transfer belt)	Check if the connecting terminals between the transfer high-voltage PWB and the primary transfer roller are contaiminated by toner. Or, the connecting terminals are deformed losing contacts.	1. If the connecting terminals is dirty, clean it using a brush. 2. If the connecting terminals are deformed, correct for a proper conduction. 3. Replace the intermediate transfer belt unit. (see page 1-5-62)
5	High-voltage PWB1	The bias voltage output supplied by the high-voltage PWB1 is not even.	Replace the high-voltage PWB1. (see page 1-5-88)

(8) Uneven density longitudinally.

Print example	Cause of trouble
	1. Dirty LSU inside 2. The transfer belt is not pressed against the drum properly. 3. Drum condensation.

	Defective part	Check description	Corrective Action
1	LSU	The emission of laser dispersed from the LSU is not even. (Mirror is dropped off inside.)	Replace the LSU.(Perform U119)
2	Primary transfer roller (intermediate transfer belt)	Check the position at which the primary transfer roller axles are mounted.	1. If the axle holder is hanged off of the mounting position, 1. fix the axle holder properly. 2. Replace the intermediate transfer belt unit. (see page 1-5-62)
3	Drum unit	1. Check if toner is evenly layered on the durm surface. 2. Check whether the device has been operated under a highly humid environment.	1. Execute drum refreshing. 2. Execute U148 Drum refresh-Dew. (see page 1-3-106) 3. Install a cassette heater. 4. Replace the drum unit. (Perform U119) (see page 1-5-57)
4	Developer unit	Check that toner is evenly layered on the developing roller.	Replace the developer unit. (see page 1-5-57)

(9) Uneven density horizontally.

Print example	Cause of trouble
	1. Defective laser scanner unit. 2. Improper charging roller rotation 3. Improper contact on the developer unit terminals

	Defective part	Check description	Corrective Action
1	LSU	Check if the emission of laser is even.	Replace the LSU. (see page 1-5-43)
2	Charging roller	Check if the charing roller is improperly mounted.	1. Fix the charging roller properly. 2. Replace the charging roller. (Perform U930) (see page 1-5-59)
3	Developer unit	Check If the connecting terminals of the developing bias is contaminated by toner.	1. If the connecting terminals is dirty, clean it using a brush. 2. Replace the developer unit. (Perform U140) (see page 1-5-57)

(10) Black or color dots appear on the image.

Print example	Cause of trouble
	1. Dirty charging roller 2. Flawed or dirty drum unit 3. Damaged or paper dust bitten cleaning blade

	Defective part	Check description	Corrective Action
1	Drum unit	Check the print image on paper has a problem at an interval equivalent to the circumference of the drum(94mm).	If the drum has scratches, replace the drum unit. (see page 1-5-57)
2	Charging roller	Check the print image on paper has a problem at an interval equivalent to the circumference of the charging roller(38mm).	A problem is observed at a constant interval of the charging roller (38 mm), replace the charging roller.(U930) (see page 1-3-229)

	Defective part	Check description	Corrective Action
3	Developer unit	1. Check if that the developing bias is leaked.	Execute AC calibration by U140. (see page 1-3-99)
		2. Check the print image on paper has a problem at an interval equivalent to the circumference of the developing roller (39mm).	1. If the print image on paper has a problem at an interval equivalent to the circumference of the developer roller, clean the developer unit. 2. Replace the developer unit. (see page 1-5-36)

(11) Offset occurs.

Print example	Cause of trouble
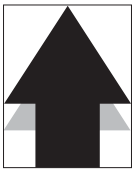	1. Flawed or dirty drum unit 2. Developing bias leakage.

	Defective part	Check description	Corrective Action
1	Drum unit	Check the print image on paper has a problem at an interval equivalent to the circumference of the drum (94mm).	If the print image on paper has a problem at an interval equivalent to the circumference of the drum, replace the drum unit. (see page 1-5-57)
2	Developer unit	Check if offsets are observed at an constant interval of 39 mm, which is equivalent to the circumference of the developing roller.	If offsets are observed at an constant interval of 39 mm, which is equivalent to the circumference of the developing roller, replace the developer unit. (Waste toner is not properly sweeped from the developing roller.) (see page 1-5-57)

(12) Part of Image is missing.

Print example	Cause of trouble
	1. Flawed or dirty drum unit. 2. Deformed or dirty primary transfer roller on its surface.

	Defective part	Check description	Corrective Action
1	Drum unit	Check the print image on paper has a problem at an interval equivalent to the circumference of the drum (94mm)	If the print image on paper has a problem at an interval equivalent to the circumference of the drum, exexcute drum refreshing (System Menu > Adjustment/Maintenance).
2	Primary transfer roller (intermediate transfer belt unit)	Check if the primary transfer roller is deformed or contaimi-nated on its surface.	If the intermediate transfer belt unit is deformed or contaminated, replace the inter-mediate transfer belt unit. (see page 1-5-62)

(13) Image is out of focus.

Print example	Cause of trouble
	1. Drum condensation. 2. Dirty LSU slit glass.

	Defective part	Check description	Corrective Action
1	Drum unit	Check that the surface of the drum has dew condensation.	Execute drum refreshing. System Menu > Adjustment/Maintenance
2	LSU	Check whether the LSU slit glass is contaminated in its entirety.	1. If the LSU slit glass is dirty, perform laser scanner cleaning. 2. Replace the LSU. (Perform U119) (see page 1-5-43)

(14) Poor grayscale reproducibility.

Print example	Cause of trouble
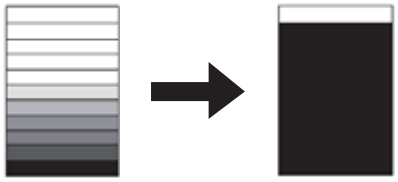	1. Poor image adjustment.

	Defective part	Check description	Corrective Action
1	Image adjustment	Check if color adjustment is insufficient.	Execute maintenance modes U464 Calibration and U410 Grayscale Adjustment. (see page 1-3-99,1-3-172)

(15) Unevenly repeating horizontal streaks in the printed objects.Colored spots in the printed objects.

Print example	Cause of trouble
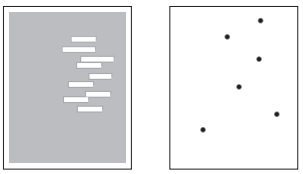	1. Installation at a high altitude. 2. Using the paper with high surface resistance.

	Defective part	Check description	Corrective Action
1	Developer unit	The device is installed in an altitude higher than 1500 m sea level.	If the device is installed in an altitude higher than 1500 m sea level, perform the following. 1. 30 ppm / 35 ppm devices Press maintenance mode U140 and select “AC Calib”, after that select “High Altitude” in order to change the setting. (Default/ 1000m/ 2000m/ 3000m/ 4000m) 2. 45 ppm / 55 ppm devices 1) Press maintenance mode U140 and execute “AC Calib” and “Calibration” with the applicable colors. 2) Execute maintenance mode U140 and select “AC Calib”, later “Maginification” in order to lower the setting value. (Initial setting CMY:15, K:12)

	Defective part	Check description	Corrective Action
2	Paper	Check if paper is of high surface resistance.	Change the paper to another.

(16) Grainy image.

Print example	Cause of trouble
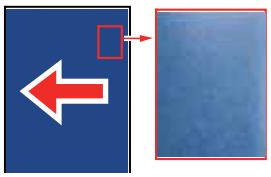	1. Installation at a high altitude. 2. Using the paper with high surface resistance.

	Defective part	Check description	Corrective Action
1	Developer unit	The device is installed in an altitude higher than 1500 m sea level.	If the device is installed in an altitude higher than 1500 m sea level, perform the following. 1. 30 ppm / 35 ppm devices Press maintenance mode U140 and select “AC Calib”, after that select “High Altitude” in order to change the setting. (Default/ 1000m/ 2000m/ 3000m/ 4000m) 2. 45 ppm / 55 ppm devices 1)After switching from "0" to "+1" in "Type" (“AC Calib”→”Calibration”), select "Execute" and press the start key. (High altitude grain mode) 2)When image levels thin does not improve even if following the above procedure, change setting of "High Altitude" in Mode2. (see page 1-3-99)
2	Paper	Check if paper is of high surface resistance.	Change the paper to another.

1-4-7 Poor image (Caused by transferring toner, paper conveying, or fusing : Four-color printer engine)

(1) No image appears (entirely white).

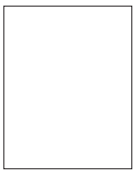

See page1-4-275

(2) Image is too light.

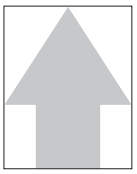

See page1-4-276

(3) The background is colored.

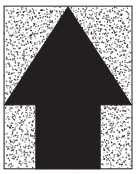

See page1-4-277

(4) White streaks are printed vertically.

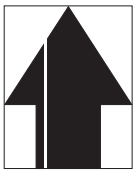

See page1-4-277

(5) Black or color streaks appear longitudinally.

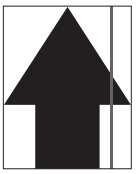

See page1-4-278

(6) Black, white or color streaks appear horizontally.

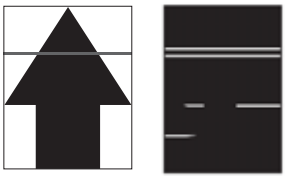

See page1-4-279

(7) Uneven transferring toner.

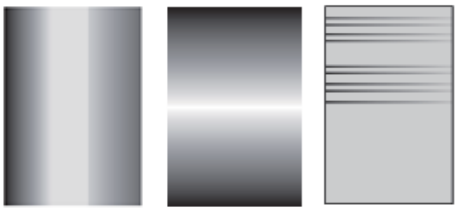

See page1-4-280

(8) Black or color dots appear on the image.

See page1-4-281

(9) Image is blurred (Shifted transferring).

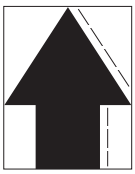

See page1-4-282

(10) The leading edge of the image is consistently misaligned with the original.

See page1-4-283

(11) The leading edge of the image is sporadically misaligned with the original.

See page1-4-283

(12) Paper is wrinkled.

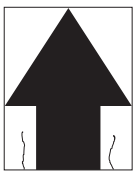

See page1-4-284

(13) Offset occurs.

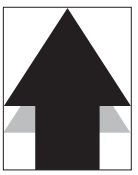

See page1-4-285

(14) Image is partly missing (Outlines objects and white dots).

See page1-4-286

(15) Fusing is loose.

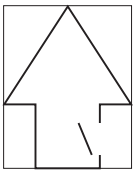

See page1-4-287

(16) Image is out of focus.

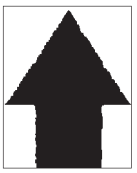

See page1-4-288

(17) Image center does not align with the original center.

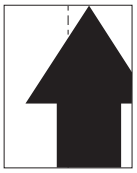

See page1-4-288

(18) Dirty paper edges with toner.

See page1-4-289

(19) Inferior color reproducibility.

See page1-4-290

(20) Shifted colors.

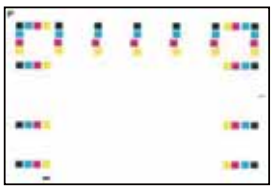

See page1-4-291

(21) Dirty reverse side of paper.

See page1-4-291

(1) No image appears (entirely white).

Print example	Cause of trouble
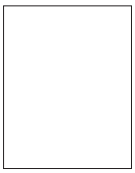	1. Defective secondary transfer bias output. 2. The secondary transfer roller is not pressurized.

	Defective part	Check description	Corrective Action
1	Secondary transfer roller	Check if the right side conveying unit is closed.	If the conveying unit has not been closed, check how the conveying guide is locked and open the conveying guide once, then close.
2	Secondary transfer roller pressure motor	1. Execute U030 Press Release to confirm that the pressure motor for the secondary transfer roller is activated. 2. Check the connection of the connectors.	1. Reinsert the connector if its connection is loose. 2. Replace the motor.
3	High-voltage PWB2	1. Check the connection of the connectors. 2. Verify conduction of the wires.	1. Reinsert the connector if its connection is loose. High voltage PWB 2 (YC1) and engine PWB (YC8) 2. Replace the cable if it has no conduction. 3. Replace the high-voltage PWB2. (see page 1-5-89)
4	Enging PWB	1. Check the connection of the connectors. 2. Verify conduction of the wires. 3. Check whether the secondary transfer high voltage-on signal is derived from the engine PWB.	1. Reinsert the connector if its connection is loose. 2. Replace the cable if it has no conduction. 3. If a signal is not obtained, replace the engine PWB. (see page 1-5-80)

(2) Image is too light.

Print example	Cause of trouble
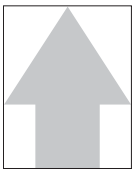	1. The paper absorbs moisture. 2. The contact pressure at the secondary trasnfer roller and the intermediate transfer belt is too low. 3. The voltage applied to the secondary transfer current is incorrect.

	Defective part	Check description	Corrective Action
1	Paper	1. Check if the paper has moisture absorbed. 2. Check the humidity at the place the paper has been stored.	1. If the paper is damp, replace. Choose a dry place to store paper. 2. If necessary, install a cassette heater.
2	Conveying unit	Check if the right side conveying unit is closed.	If the conveying unit has not been closed, check how the conveying guide is locked and open the conveying guide once, then close.
3	Secondary transfer roller	Check the position of the secondary transfer roller during printing.	Position the pressure cam correctly if the secondary transnfer roller is off-set.
4	High-voltage PWB2	Check if the connecting terminals between the high-voltage PWB2 and the conveying unit are not dirty nor deformed.	1. If the connecting terminals are dirty, clean. 2. If the connecting terminals are deformed, correct for a proper conduction.
5	U106 the secondary transfer volatage setting	Check the secondary transfer volatage by U106.	If the value of the secondary transfer voltage by U106 is not its default, reset it to the default. (see page 1-3-80)

(3) The background is colored.

Print example	Cause of trouble
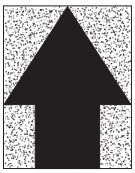	1. Defective intermediate transfer belt unit grounding. 2. Dirty secondary transfer roller.

	Defective part	Check description	Corrective Action
1	Intermediate transfer belt unit	1. Check if the belt is bleached on its surface. Check the value of U140 MagDC after conducting calibration.	Increase the U140 MagDC value if the U140 MadDC value has not reached at its maximum even though the belt is bleached on its surface. If the MadDC increased to its maximum won't cure, replace the intermediate transfer belt unit. (see page 1-5-62)
		2. Check if the ground tab of the intermediate transfer belt unit is deformed.	If the grounding tab is deformed, correct it so that it is properly grounded.
2	Secondary transfer roller	Check that the roller is dirty in its entirely.	If the secondary transfer roller is dirty in its entirely, replace.

(4) White streaks are printed vertically.

Print example	Cause of trouble
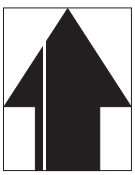	1. Dirty the intermediate transfer belt unit. 2. Dirty the secondary transfer roller.

	Defective part	Check description	Corrective Action
1	Intermediate transfer belt unit	Check whether a white streak occurs at the same position as the smear on the intermediate transfer belt.	1. Clean the intermediate transfer belt if it is dirty. 2. Replace the intermediate transfer belt unit. (see page 1-5-62)
2	Secondary transfer roller	Check whether a white streak occurs at the same position as the smear on the secondary transfer roller.	Clean the secondary transfer roller if it is dirty. If not cured, replace the secondary transfer roller. (see page 1-5-66)

(5) Black or color streaks appear longitudinally.

Print example	Cause of trouble
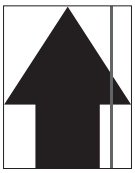	1. Poor voltage applied for intermediate transfer belt cleaning. 2. Dirty secondary transfer roller. 3. Dirty separation brush. 4. Dirty fuser unit inside.

	Defective part	Check description	Corrective Action
1	Intermediate transfer belt unit	Check if paper dusts have accumulated at the proximity of the cleaning pre-brush.	1. If paper dusts are accumulated, clean the pre-brush by removing the cleaning cover. (see page 1-5-64) 2. If cleaning does not help improve the symptom, replace intermediate transfer belt unit. (see page 1-5-62)
		Check if the cleaning bias connector or the connecting terminals of high voltage are not dirty or deformed.	1. If the connector or terminals are dirty, clean. 2. If the connecting terminals are deformed, correct for a proper conduction. 3. Replace the high-voltage PWB2. (see page 1-5-89)
		Check if the intermediate transfer belt roller is contaminated on its surface or damaged.	1. If smear and scuff are observed on the Intermediate transfer belt, replace the unit. (see page 1-5-62)
2	Secondary transfer roller	Check if the secondary transfer roller is contaminated, deformed or abraded.	Clean the secondary transfer roller if it is dirty. Replace the roller if it is deformed or abraded. (see page 1-5-66)
3	Separation brush	Check if the separation brush is dirty with paper dusts or waste toner.	If the separation brush is dirty, clean it using a brush.
4	Fuser unit	1. The paper separation plate is contaminated with toner. 2. Check if the device is adjusted for a correct paper weight that matches the paper in use.	1. If the paper separation plate is dirty, clean the paper separation plate. 2. If the settings for paper weight and the paper being used do not match, make a proper configuration.
5	Eject guide	The rib is contaminated with toner.	If it is duty,clean.

(6) Black, white or color streaks appear horizontally.

Print example	Cause of trouble
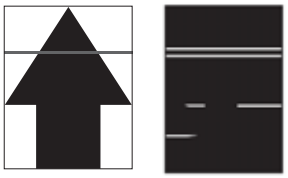	1. Defective intermediate transfer belt unit grounding. 2. Dirty secondary transfer roller.

	Defective part	Check description	Corrective Action
1	Intermediate transfer belt unit	Check if the phenomenon appears at a pitch of the circumference of the intermediate roller.	1. If the print image has a problem, clean the intermediate transfer belt by a soft cloth. 2. If cleaning does not cure, replace intermediate transfer belt unit.
2	Fuser unit	Check the print image on paper has a problem at an interval equivalent to the circumference of the fuser roller.	If the print image has a problem, clean the fuser roller.If it does not cure, replace the fuser unit.

(7) Uneven transferring toner.

Print example	Cause of trouble
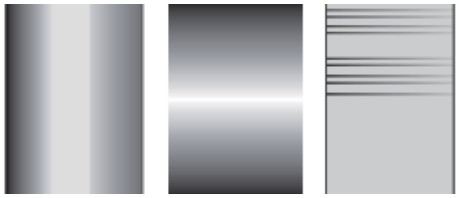	1. Defective intermediate transfer belt unit grounding. 2. Dirty secondary transfer roller.

	Defective part	Check description	Corrective Action
1	Intermediate transfer belt unit	Check if paper dusts have accumulated at the proximity of the cleaning pre-brush.	1. If paper dusts are accumulated, clean the pre-brush by removing the cleaning cover. 2. If cleaning does not help improve the symptom, replace intermediate transfer belt unit. (see page 1-5-62)
		Check if the cleaning bias connector or the connecting terminals of high voltage are not dirty or deformed.	1. If the connector or terminals are dirty, clean. 2. If the connecting terminals are deformed, correct for a proper conduction. 3. Replace the high-voltage PWB2. (see page 1-5-89)
		Check if the intermediate transfer belt roller is contaminated on its surface or damaged.	1. Replace the intermediate transfer belt unit. (see page 1-5-62)
2	Secondary transfer roller	Check if the secondary transfer roller is contaminated, deformed or abraded.	1. If the secondary transfer roller is dirty, clean. 2. If cleaning does not help improve the symptom, replace the secondary trasnfer roller. (see page 1-5-66)
3	Fuser unit	Check if the roller, its driving unit, or the fusing pressure release mechanism is deformed, abraded, or damaged.	If the roller, its driving unit, or the fusing pressure release mechanism is deformed, abraded, or damaged, replace the fuser unit. (see page 1-5-62)

(8) Black or color dots appear on the image.

Print example	Cause of trouble
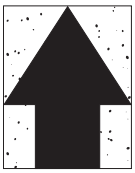	1. Flawed or dirty transfer belt. 2. Dirty secondary transfer roller. 3. Dirty Fuser unit inside.

	Defective part	Check description	Corrective Action
1	Intermediate transfer belt unit	Check the intermediate transfer belt cleaning.	1. Clean the cleaning pre-brush. 2. If it does not cure, replace the cleaning pre-brush. (see page 1-5-64)
		Check if smears or scuffs appear at a pitch of the circumference of the intermediate transfer belt.	Replace the intermediate transfer belt unit. (see page 1-5-62)
2	Secondary transfer roller	Check the print image on paper has a problem at an interval equivalent to the circumference of the secondary transfer roller(75mm).	1. If the print image has a problem, clean the secondary transfer roller. 2. If cleaning does not help improve the symptom, replace the roller. (see page 1-5-66)
3	Fuser unit	Check the print image on paper has a problem at an interval equivalent to the circumference of the fuser roller or the fuser belt.	1. If the print image has a problem, clean the fuser roller or the fuser belt. 2. If cleaning does not help improve the symptom, replace the fuser unit. (see page 1-5-68)

(9) Image is blurred (Shifted transferring).

Print example	Cause of trouble
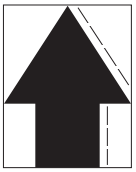	1. The paper used does not conform to the requirement. 2. Imbalanced fuser unit pressures.

	Defective part	Check description	Corrective Action
1	Paper	1. Check that the type of the paper used falls within the range of specifications. 2. Check the settings of the type and weight of the paper.	1. If the type of the paper being used falls outside the requirements, replace and use a suitable type of paper. 2. If the settings made for the paper being used is inadequate, configure the settings according to the paper being used.
2	Fuser unit	1. Check the fuser pressure balance. 2. Check if the fuser paper-inserting guide is deformed.	1. If the pressures at the front and rear are unbalanced, replace the fuser unit. (see page 1-5-68) 2. If the fuser unit is deformed, replace. (see page 1-5-68)
3	Paper conveying motor	Check to see if the driving mechanism for paper conveying is operative without a hinderance.	If the drive does not operate normally, apply grease.
4	Paper conveying guide	The paper conveying guide is deformed.	Replace the paper conveying guide.

(10) The leading edge of the image is consistently misaligned with the original.

Print example	Cause of trouble
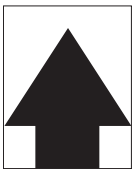	1. Improperly adjusted leading edge timing. 2. Improper amount of slack of the original document in front of the registration.

	Defective part	Check description	Corrective Action
1	Regist roller	1. Check whether the leading-edge timing is adequately adjusted.	If theadjustment is not sufficient, perform U034 to adjust the leading edge timing. (see page 1-3-38)
		2. Check whether the amount of slack of the original document when it reaches at the DP regist is adequate.	If the amount of the slack in front of the regist roller is insufficient, perform maintenance mode U051 to optimize the slack. (see page 1-3-45)

(11) The leading edge of the image is sporadically misaligned with the original.

Print example
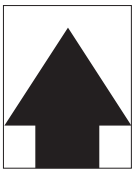

	Defective part	Check description	Corrective Action
1	Paper feed clutch, Middle clutch, Registration clutch, Duplex clutch	Check that the clutches are properly fit.IOr, check they are operative without a hinderance. (30 ppm/35 ppm model)	1. If it is not fixed properly, fix it properly. 2. If it does not operate without a hinderance, replace the clutch.
2	Paper feed clutch, Middle motor, Registration motor, Duplex motor	Check that the clutches and motors are properly fit.Or, check they are operative without a hinderance. (45 ppm/55 ppm model)	1. If it is not fixed properly, fix it properly. 2. If it does not operate without a hinderance, replace the clutch or motor.

(12) Paper is wrinkled.

Print example
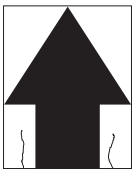

	Defective part	Check description	Corrective Action
1	Paper-width guides	Check the paper-width guides are flush with the paper.	If the width adjuster cursors are not flush with paper, set them correctly.
2	Paper	1. Check if paper is curled or wavy. 2. Check if paper is stored in a humid place.	1. If the paper is curled or wavy, replace. 2. Choose a dry place to store paper.
3	Registration roller	The pressures at the front and back springs are unbalanced.	Replace the spring with the one having a correct pressure.
4	Fuser unit	The pressuring spring of the fuser unit is defective.	Replace the fuser unit. (see page 1-5-68)

(13) Offset occurs.

Print example
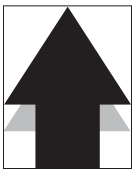

	Defective part	Check description	Corrective Action
1	Paper	1. Check that the type of the paper used falls within the range of specifications. 2. Check the settings of the type and weight of the paper.	1. If the type of the paper being used falls outside the requirements, replace and use a suitable type of paper. 2. If the settings made for the paper being used is inadequate, configure the settings according to the paper being used.
2	Intermediate transfer belt unit	Check the transfer cleaning volatage by U107. (see page 1-3-87)	1. If the transfer cleaning volatage by U107 is not its default, reset it to the default. 2. Replace the intermediate transfer belt unit. (see page 1-5-62)
		Check if offsets are occurred at a pitch of the outer circumference of the intermediate transfer belt.	If an offset happens at a pitch of the outer circumference, clean the intermediate transfer belt.
3	Fuser unit	Check if the fuser unit roller is dirty.	If the fuser unit roller is dirty, replace the unit.
4	Fusing temperature setting	Check the fusing temperature value by U161. (see page 1-3-110)	If the fusing temperature value by U161 is not its default, reset it to the default.

(14) Image is partly missing (Outlines objects and white dots).

Print example

	Defective part	Check description	Corrective Action
1	Paper	1. Check that the paper has moisture absorbed. 2. Check that the paper has stored in a humid place.	1. If the paper is damp, replace.Choose a dry place to store paper. 2. If necessary, install a cassette heater. (see page 1-2-67)
2	Intermediate transfer belt unit	Check the print image that implies dirt, deformation, or scratches on the intermediate transfer belt, which will be appearing at an interval equal to its circumference (936mm).	1. Clean the intermediate transfer belt by a soft cloth. 2. Replace the intermediate transfer belt unit.
3	Secondary transfer roller	Check the print image on paper has a problem at an interval equivalent to the circumference of the secondary transfer roller(75mm).	1. Clean the secondary transfer roller. 2. Replace the secondary transfer roller. (see page 1-5-66)
4	Fusing temperature setting	Execute U161 to check the value and check whether the fuser temperature is set to low. (see page 1-3-110)	1. Choose a paper weight appropriate for the weight of the paper actually being used, if the fusing temperature was set low using U161. 2. Execute U161 for an appropriate fusing temperature.

(15) Fusing is loose.

Print example
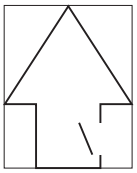

	Defective part	Check description	Corrective Action
1	Paper	1. Check that the type of the paper used falls within the range of specifications. 2. Check the settings of the type and weight of the paper.	1. If the type of the paper being used falls outside the requirements, replace and use a suitable type of paper. 2. If the settings made for the paper being used is inadequate, configure the settings according to the paper being used.
2	Paper weight setting	Check If the weight of the paper is correctly set.	If the weight of the paper is not correctly set, choose the correct weight that matches the paper being used.
3	Fuser unit	Check the fuser pressure setting.	Replace the fuser unit. (see page 1-5-68)
4	Fusing temperature setting	Check the value of the U161. (see page 1-3-110)	1. Choose a paper weight appropriate for the weight of the paper actually being used, if the fusing temperature was set low using U161. 2. Perform U161 for an appropriate fusing temperature.

(16) Image is out of focus.

Print example

	Defective part	Check description	Corrective Action
1	Paper	1. Check that the paper has moisture absorbed. 2. Check that the paper has stored in a humid place.	1. If the paper is damp, replace. Choose a dry place to store paper. 2. If necessary, install a cassette heater. (see page 1-2-67)

(17) Image center does not align with the original center.

Print example
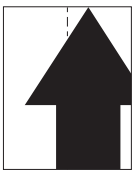

	Defective part	Check description	Corrective Action
1	Paper setting	Check if paper is set correctly.	Reload paper if the paper was not loaded correctly.
2	Image position adjustment	Excute U034 to confirm the center alignment during writing images.	Perform adjustment if the value of U034 Center Line Adjustment is inadequate. (see page 1-3-38)

(18) Dirty paper edges with toner.

Print example	Cause of trouble
	1. Toner scattering due to an internal temperature increase.(Developer unit)

	Defective part	Check description	Corrective Action
1	Conveying guide	Check if the conveying guide is dirty with toner.	If the conveying guide is dirty with toner, clean the developer unit and the cooling ducts.
2	Internal tempra-ture increase	Check the device has been used for printing a large amount of data or for printing in duplex mode with a high density.	If the device has been used for printing a large amout of data or for printing in duplex mode with a high density, clean the developer unit.

(19) Inferior color reproducibility.

Print example

	Defective part	Check description	Corrective Action
1	Paper	Check that the paper has moisture absorbed. Check that the paper has stored in a humid place.	1. If the paper is damp, replace. Choose a dry place to store paper. 2. If necessary, install a cassette heater. (see page 1-2-67)
2	Paper specifications	Slight uneveness in glossiness is observed at the high density area of the image on paper.	If the type of the paper being used falls outside the requirement, use a suitable type of paper. 1. If the rough paper intended for monochrome printing is being used, change the paper to the type intended for color printing. 2. Select the Gain Mode by U161 and select a lower fusing temperature. 3. If the installation environment is at a high altitude, select and perform U140 High Altitude. (see page 1-3-99)
3	Paper type	Check the settings of the type and weight of the paper.	If the paper and the paper type or weight do not match, choose the correct match.
4	Image adjustment	Check whether the above has been cured.	Execute maintenance modes U464 Calibration and U410 Grayscale Adjustment.
5	Engine PWB	Check if the color printing is florid in its entirety.	If the print image is florid, replace the engine PWB. (see page 1-5-80)
6	Printer driver setting	Check that what color table is being selected for the printer.	1. If a proper color table is not being selected for the printer, manipulate the printer driver for a mode that provides a proper color fidelity. 2. Select an adequate mode by U485.
		Check that the print data is of CMYK.	If the print data is of CMYK, select an adequate mode by the KPDL Color Conversion Process.

(20) Shifted colors.

Print example	Cause of trouble
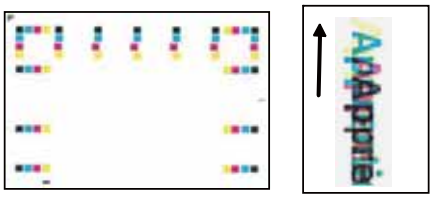	1. False detection of the velocity of rotation of the transfer belt.(Noise)

	Defective part	Check description	Corrective Action
1	Color Regist Adjustment	Check if U469 Color Regist Adjustment is performed after power is turned on and warming-up completes.	If U469 Color Registration adjustment has not been done, perform U464 Calibration, then U469 Color Registration. (see page 1-3-197,1-3-204)
2	Motor control PWB	If the above remedy won't work, check whether an intensive color shift in the direction of sub scan is observed.	If it does not cure,replace the motor control PWB.
3	LSU	Check if adjusting the color shift can help compensation in the direction of main scan.	Replace the laser scanner unit if necessary. (see page 1-5-43)

(21) Dirty reverse side of paper.

Print example

	Defective part	Check description	Corrective Action
1	Secondary transfer roller	Check if the secondary transfer roller is dirty with toner.	1. Clean the secondary transfer roller. 2. Reset U106 Bias settings to its default.
2	Fuser pressure roller	Check that a foreign object is stuck on the fuser pressure roller.	1. If a foreign object exists, clean the fuser pressure roller. 2. If the paper and the paper weight do not match, choose the proper paper weight setting.
3	Upper conveying guide	Check if the conveying guide is dirty with toner.	If the conveying guide is dirty with toner,clean the conveying guide or the developer unit.

1-4-8 Electric problems

If the part causing the problem was not supplied, use the unit including the part for replacement.
Troubleshooting to each failure must be in the order of the numbered symptoms.

Problem	Causes	Check procedures/corrective measures
(1) The machine does not operate when the main power switch is turned on.	1. No electricity at the power outlet.	Measure the input voltage.
	2. The power cord is not plugged in properly.	Check the contact between the power plug and the outlet.
	3. Broken power cord.	Check for continuity. If none, replace the cord.
	4. Defective main power switch.	Check for continuity across the contacts. If none, replace the main power switch.
	5. Defective power source PWB.	Replace the power source PWB (see page 1-5-85).
(2) MP lift motor does not operate.	1. Defective connector cable or poor contact in the connector.	Reinsert the connector. Also check for continuity within the connector cable. If none, replace the cable. MP lift motor and relay PWB (YC3) Relay PWB (YC12) and feed PWB 1 (YC17) Feed PWB 1 (YC1) and engine PWB (YC6)
	2. Defective drive transmission system.	Check if the rollers and gears rotate smoothly. If not, grease the bushes and gears. Check for broken gears and replace if any.
	3. Defective motor.	Replace the MP lift motor.
	4. Defective PWB.	Replace the relay PWB, feed PWB 1 or engine PWB and check for correct operation (see page 1-5-80).
(3) Scanner motor does not operate.	1. Defective connector cable or poor contact in the connector.	Reinsert the connector. Also check for continuity within the connector cable. If none, replace the cable. Scanner motor and ISC PWB (YC5) ISC PWB (YC3) and main PWB (YC11)
	2. Defective drive transmission system.	Check if the rollers and gears rotate smoothly. If not, grease the bushes and gears. Check for broken gears and replace if any.
	3. Defective motor.	Replace the scanner motor.
	4. Defective PWB.	Replace the ISC PWB or main PWB and check for correct operation (see page 1-5-72).
(4) Registration motor does not operate (45 ppm/55 ppm model only).	1. Defective connector cable or poor contact in the connector.	Reinsert the connector. Also check for continuity within the connector cable. If none, replace the cable. Registration motor and feed PWB 1 (YC25) Feed PWB 1 (YC2) and engine PWB (YC5)
	2. Defective drive transmission system.	Check if the rollers and gears rotate smoothly. If not, grease the bushes and gears. Check for broken gears and replace if any.
	3. Defective motor.	Replace the registration motor.
	4. Defective PWB.	Replace the feed PWB 1 or engine PWB and check for correct operation (see page 1-5-80).

Problem	Causes	Check procedures/corrective measures
(5) Middle motor does not operate (45 ppm/55 ppm model only).	1. Defective connector cable or poor contact in the connector.	Reinsert the connector. Also check for continuity within the connector cable. If none, replace the cable. Middle motor and feed PWB 2 (YC7) Feed PWB 2 (YC1) and engine PWB (YC4)
	2. Defective drive transmission system.	Check if the rollers and gears rotate smoothly. If not, grease the bushes and gears. Check for broken gears and replace if any.
	3. Defective motor.	Replace the middle motor.
	4. Defective PWB.	Replace the feed PWB 2 or engine PWB and check for correct operation (see page 1-5-80).
(6) Eject motor does not operate.	1. Defective connector cable or poor contact in the connector.	Reinsert the connector. Also check for continuity within the connector cable. If none, replace the cable. Eject motor and front PWB (YC5) Front PWB (YC3) and engine PWB (YC7)
	2. Defective drive transmission system.	Check if the rollers and gears rotate smoothly. If not, grease the bushes and gears. Check for broken gears and replace if any.
	3. Defective motor.	Replace the eject motor.
	4. Defective PWB.	Replace the front PWB or engine PWB and check for correct operation (see page 1-5-80).
(7) Duplex motor 1 does not operate (45 ppm/55 ppm model only).	1. Defective connector cable or poor contact in the connector.	Reinsert the connector. Also check for continuity within the connector cable. If none, replace the cable. Duplex motor 1 and relay PWB (YC16) Relay PWB (YC13) and feed PWB 1 (YC23) Feed PWB 1 (YC2) and engine PWB (YC5)
	2. Defective drive transmission system.	Check if the rollers and gears rotate smoothly. If not, grease the bushes and gears. Check for broken gears and replace if any.
	3. Defective motor.	Replace the duplex motor 1.
	4. Defective PWB.	Replace the relay PWB, feed PWB 1 or engine PWB and check for correct operation (see page 1-5-80).
(8) Duplex motor 2 does not operate (45 ppm/55 ppm model only).	1. Defective connector cable or poor contact in the connector.	Reinsert the connector. Also check for continuity within the connector cable. If none, replace the cable. Duplex motor 2 and relay PWB (YC7) Relay PWB (YC1) and feed PWB 1 (YC14) Feed PWB 1 (YC1) and engine PWB (YC6)
	2. Defective drive transmission system.	Check if the rollers and gears rotate smoothly. If not, grease the bushes and gears. Check for broken gears and replace if any.
	3. Defective motor.	Replace the duplex motor 2.
	4. Defective PWB.	Replace the relay PWB, feed PWB 1 or engine PWB and check for correct operation (see page 1-5-80).

Problem	Causes	Check procedures/corrective measures
(9) Toner fan motor 1, 2 does not operate (45 ppm/55 ppm model only).	1. Defective connector cable or poor contact in the connector.	Reinsert the connector. Also check for continuity within the connector cable. If none, replace the cable. Toner fan motor 1, 2 and engine PWB (YC19)
	2. Defective motor.	Replace the toner fan motor 1 or 2.
	3. Defective PWB.	Replace the engine PWB and check for correct operation (see page 1-5-80).
(10) Developer fan motor 1, 2 does not operate.	1. Defective connector cable or poor contact in the connector.	Reinsert the connector. Also check for continuity within the connector cable. If none, replace the cable. Developer fan motor 1, 2 and front PWB (YC6) Front PWB (YC3) and engine PWB (YC7)
	2. Defective motor.	Replace the developer fan motor 1 or 2.
	3. Defective PWB.	Replace the front PWB or engine PWB and check for correct operation (see page 1-5-80).
(11) Exhaust fan motor 1, 2 does not operate (45 ppm/55 ppm model only).	1. Defective connector cable or poor contact in the connector.	Reinsert the connector. Also check for continuity within the connector cable. If none, replace the cable. Exhaust fan motor 1, 2 and engine PWB (YC19)
	2. Defective motor.	Replace the exhaust fan motor 1 or 2.
	3. Defective PWB.	Replace the engine PWB and check for correct operation (see page 1-5-80).
(12) LSU fan motor does not operate.	1. Defective connector cable or poor contact in the connector.	Reinsert the connector. Also check for continuity within the connector cable. If none, replace the cable. LSU fan motor and front PWB (YC16) Front PWB (YC2) and engine PWB (YC10)
	2. Defective motor.	Replace the LSU fan motor.
	3. Defective PWB.	Replace the front PWB or engine PWB and check for correct operation (see page 1-5-80).
(13) Belt fan motor 1, 2* does not operate (45 ppm/55 ppm model only).	1. Defective connector cable or poor contact in the connector.	Reinsert the connector. Also check for continuity within the connector cable. If none, replace the cable. Belt fan motor 1, 2 and engine PWB (YC19)
	2. Defective motor.	Replace the belt fan motor 1 or 2.
	3. Defective PWB.	Replace the engine PWB and check for correct operation (see page 1-5-80).
(14) Fuser fan motor 1, 2 does not operate.	1. Defective connector cable or poor contact in the connector.	Reinsert the connector. Also check for continuity within the connector cable. If none, replace the cable. Fuser fan motor 1, 2 and relay PWB (YC16) Relay PWB (YC13) and feed PWB 1 (YC23) Feed PWB 1 (YC2) and engine PWB (YC5)
	2. Defective motor.	Replace the fuser fan motor 1 or 2.
	3. Defective PWB.	Replace the relay PWB, feed PWB 1 or engine PWB and check for correct operation (see page 1-5-80).

Problem	Causes	Check procedures/corrective measures
(15) Eject fan motor 1, 2 does not operate (45 ppm/55 ppm model only).	1. Defective connector cable or poor contact in the connector.	Reinsert the connector. Also check for continuity within the connector cable. If none, replace the cable. Eject fan motor 1, 2 and relay PWB (YC11) Relay PWB (YC13) and feed PWB 1 (YC23) Feed PWB 1 (YC2) and engine PWB (YC5)
	2. Defective motor.	Replace the eject fan motor 1 or 2.
	3. Defective PWB.	Replace the relay PWB, feed PWB 1 or engine PWB and check for correct operation (see page 1-5-80).
(16) Eject front fan motor does not operate.	1. Defective connector cable or poor contact in the connector.	Reinsert the connector. Also check for continuity within the connector cable. If none, replace the cable. Eject front fan motor and front PWB (YC4) Front PWB (YC3) and engine PWB (YC7)
	2. Defective motor.	Replace the eject front fan motor.
	3. Defective PWB.	Replace the front PWB or engine PWB and check for correct operation (see page 1-5-80).
(17) Eject rear fan motor does not operate.	1. Defective connector cable or poor contact in the connector.	Reinsert the connector. Also check for continuity within the connector cable. If none, replace the cable. Eject rear fan motor and feed PWB 1 (YC19) Feed PWB 1 (YC1) and engine PWB (YC6)
	2. Defective motor.	Replace the eject rear fan motor.
	3. Defective PWB.	Replace the feed PWB 1 or engine PWB and check for correct operation (see page 1-5-80).
(18) Power source fan motor does not operate.	1. Defective connector cable or poor contact in the connector.	Reinsert the connector. Also check for continuity within the connector cable. If none, replace the cable. Power source fan motor and engine PWB (YC22)
	2. Defective motor.	Replace the power source fan motor.
	3. Defective PWB.	Replace the engine PWB and check for correct operation (see page 1-5-80).
(19) Controller fan motor does not operate.	1. Defective connector cable or poor contact in the connector.	Reinsert the connector. Also check for continuity within the connector cable. If none, replace the cable. Controller fan motor and main PWB (YC23)
	2. Defective motor.	Replace the controller fan motor.
	3. Defective PWB.	Replace the main PWB and check for correct operation (see page 1-5-72).
(20) Paper feed clutch 1, 2 does not operate.	1. Defective connector cable or poor contact in the connector.	Reinsert the connector. Also check for continuity within the connector cable. If none, replace the cable. Paper feed clutch 1, 2 and feed PWB 2 (YC4) Feed PWB 2 (YC1) and engine PWB (YC4)
	2. Defective clutch.	Replace the paper feed clutch 1 or 2.
	3. Defective PWB.	Replace the feed PWB 2 or engine PWB and check for correct operation (see page 1-5-80).

Problem	Causes	Check procedures/corrective measures
(21) Assist clutch 1, 2 does not operate (45 ppm/55 ppm model only).	1. Defective connector cable or poor contact in the connector.	Reinsert the connector. Also check for continuity within the connector cable. If none, replace the cable. Assist clutch 1 and feed PWB 2 (YC10) Assist clutch 2 and feed PWB 2 (YC12) Feed PWB 2 (YC1) and engine PWB (YC4)
	2. Defective clutch.	Replace the assist clutch 1 or 2.
	3. Defective PWB.	Replace the feed PWB 2 or engine PWB and check for correct operation (see page 1-5-80).
(22) Paper conveying clutch does not operate.	1. Defective connector cable or poor contact in the connector.	Reinsert the connector. Also check for continuity within the connector cable. If none, replace the cable. Paper conveying clutch and feed PWB 2 (YC5) Feed PWB 2 (YC1) and engine PWB (YC4)
	2. Defective clutch.	Replace the paper conveying clutch.
	3. Defective PWB.	Replace the feed PWB 2 or engine PWB and check for correct operation (see page 1-5-80).
(23) MP paper feed clutch does not operate.	1. Defective connector cable or poor contact in the connector.	Reinsert the connector. Also check for continuity within the connector cable. If none, replace the cable. MP paper feed clutch and relay PWB (YC3) Relay PWB (YC12) and feed PWB 1 (YC17) Feed PWB 1 (YC1) and engine PWB (YC6)
	2. Defective clutch.	Replace the MP paper feed clutch.
	3. Defective PWB.	Replace the relay PWB, feed PWB 1 or engine PWB and check for correct operation (see page 1-5-80).
(24) Registration clutch does not operate (30 ppm/35 ppm model only).	1. Defective connector cable or poor contact in the connector.	Reinsert the connector. Also check for continuity within the connector cable. If none, replace the cable. Registration clutch and feed PWB 1 (YC22) Feed PWB 1 (YC2) and engine PWB (YC5)
	2. Defective clutch.	Replace the registration clutch.
	3. Defective PWB.	Replace the feed PWB 1 or engine PWB and check for correct operation (see page 1-5-80).
(25) Middle clutch does not operate (30 ppm/35 ppm model only).	1. Defective connector cable or poor contact in the connector.	Reinsert the connector. Also check for continuity within the connector cable. If none, replace the cable. Middle clutch and feed PWB 2 (YC7) Feed PWB 2 (YC1) and engine PWB (YC4)
	2. Defective clutch.	Replace the middle clutch.
	3. Defective PWB.	Replace the feed PWB 2 or engine PWB and check for correct operation (see page 1-5-80).
(26) Duplex clutch 1 does not operate (30 ppm/35 ppm model only).	1. Defective connector cable or poor contact in the connector.	Reinsert the connector. Also check for continuity within the connector cable. If none, replace the cable. Duplex clutch 1 and relay PWB (YC11) Relay PWB (YC13) and feed PWB 1 (YC23) Feed PWB 1 (YC2) and engine PWB (YC5)
	2. Defective clutch.	Replace the duplex clutch 1.
	3. Defective PWB.	Replace the relay PWB, feed PWB 1 or engine PWB and check for correct operation (see page 1-5-80).

Problem	Causes	Check procedures/corrective measures
(27) Duplex clutch 2 does not operate (30 ppm/35 ppm model only).	1. Defective connector cable or poor contact in the connector.	Reinsert the connector. Also check for continuity within the connector cable. If none, replace the cable. Duplex clutch 2 and relay PWB (YC7) Relay PWB (YC1) and feed PWB 1 (YC14) Feed PWB 1 (YC1) and engine PWB (YC6)
	2. Defective clutch.	Replace the duplex clutch 2.
	3. Defective PWB.	Replace the relay PWB, feed PWB 1 or engine PWB and check for correct operation (see page 1-5-80).
(28) Feedshift solenoid does not operate.	1. Defective connector cable or poor contact in the connector.	Reinsert the connector. Also check for continuity within the connector cable. If none, replace the cable. Feedshift and front PWB (YC5) Front PWB (YC3) and engine PWB (YC7)
	2. Defective solenoid.	Replace the feedshift solenoid 1 or 2.
	3. Defective PWB.	Replace the front PWB or engine PWB and check for correct operation (see page 1-5-80).
(29) Cleaning solenoid does not operate.	1. Defective connector cable or poor contact in the connector.	Reinsert the connector. Also check for continuity within the connector cable. If none, replace the cable. Cleaning solenoid and feed PWB 1 (YC10) Feed PWB 1 (YC1) and engine PWB (YC4)
	2. Defective solenoid.	Replace the cleaning solenoid.
	3. Defective PWB.	Replace the feed PWB 1 or engine PWB and check for correct operation (see page 1-5-80).
(30) The message requesting paper to be loaded is shown when paper is present on the cassette.	1. Defective connector cable or poor contact in the connector.	Reinsert the connector. Also check for continuity within the connector cable. If none, replace the cable. Paper sensor 1, 2 and feed PWB 2 (YC8) Feed PWB 2 (YC1) and engine PWB (YC4)
	2. Deformed actuator.	Check visually and replace if necessary.
	3. Defective sensor.	Replace the paper sensor 1 or 2.
	4. Defective PWB.	Replace the feed PWB 2 or engine PWB and check for correct operation (see page 1-5-80).
(31) The message requesting paper to be loaded is shown when paper is present on the MP tray.	1. Defective connector cable or poor contact in the connector.	Reinsert the connector. Also check for continuity within the connector cable. If none, replace the cable. MP paper sensor and relay PWB (YC3) Relay PWB (YC12) and feed PWB 1 (YC17) Feed PWB 1 (YC1)and engine PWB (YC6)
	2. Deformed actuator.	Check visually and replace if necessary.
	3. Defective sensor.	Replace the MP paper sensor.
	4. Defective PWB.	Replace the feed PWB 1 or engine PWB and check for correct operation (see page 1-5-80).

Problem	Causes	Check procedures/corrective measures
(32) The size of paper on the cassette is not displayed correctly.	1. Defective connector cable or poor contact in the connector.	Reinsert the connector. Also check for continuity within the connector cable. If none, replace the cable. Paper length switch 1, 2 and feed PWB 2 (YC3) Paper width switch 1, 2 and feed PWB 2 (YC3) Feed PWB 2 (YC1) and engine PWB (YC4)
	2. Defective switch.	Replace the paper length switch 1, 2 or paper width switch 1, 2.
	3. Defective PWB.	Replace the feed PWB 2 or engine PWB and check for correct operation (see page 1-5-80).
(33) The size of paper on the MP tray is not displayed correctly.	1. Defective connector cable or poor contact in the connector.	Reinsert the connector. Also check for continuity within the connector cable. If none, replace the cable. MP paper length switch and relay PWB (YC2) MP paper width switch and relay PWB (YC2) Relay PWB (YC12) and feed PWB 1 (YC17) Feed PWB 1 (YC1)and engine PWB (YC6)
	2. Defective switch.	Replace the MP paper length switch or MP paper width switch.
	3. Defective PWB.	Replace the relay PWB, feed PWB 1 or engine PWB and check for correct operation (see page 1-5-80).
(34) A paper jam in the paper feed, paper conveying or eject section is indicated when the main power switch is turned on.	1. A piece of paper torn from paper is caught around feed sensor 1, 2, MP feed sensor, middle sensor, paper conveying sensor, registration sensor, loop sensor, fuser eject sensor, duplex sensor 1, 2, eject full sensor or switchback sensor.	Check visually and remove it, if any.
	2. Defective sensor.	Replace the feed sensor 1, 2, MP feed sensor, middle sensor, paper conveying sensor, registration sensor, loop sensor, fuser eject sensor, duplex sensor 1, 2, eject full sensor or switchback sensor.
(35) A message indicating cover open is displayed when the front cover is closed.	1. Defective connector cable or poor contact in the connector.	Reinsert the connector. Also check for continuity within the connector cable. If none, replace the cable. Front cover switch and front PWB (YC16) Front PWB (YC2) and engine PWB (YC10)
	2. Defective switch.	Replace the front cover switch.

Problem	Causes	Check procedures/corrective measures
(36) A message indicating unit open is displayed when the paper conveying unit is closed.	1. Defective connector cable or poor contact in the connector.	Reinsert the connector. Also check for continuity within the connector cable. If none, replace the cable. Paper conveying unit switch and feed PWB 1 (YC15) Feed PWB 1 (YC4) and power source PWB (YC12)
	2. Defective switch.	Replace the paper conveying unit switch.
(37) A message indicating cover open is displayed when the duplex cover is closed.	1. Defective connector cable or poor contact in the connector.	Reinsert the connector. Also check for continuity within the connector cable. If none, replace the cable. Duplex cover switch and relay PWB (YC7) Relay PWB (YC1) and feed PWB 1 (YC14) Feed PWB 1 (YC1)and engine PWB (YC6)
	2. Defective switch.	Replace the duplex cover switch.
(38) A message indicating cover open is displayed when the paper conveying cover is closed.	1. Defective connector cable or poor contact in the connector.	Reinsert the connector. Also check for continuity within the connector cable. If none, replace the cable. Paper conveying cover switch and feed PWB 2 (YC6) Feed PWB 2 (YC1) and power source PWB (YC4)
	2. Defective switch.	Replace the paper conveying cover switch.

1-4-9 Mechanical problems

If the part causing the problem was not supplied, use the unit including the part for replacement.

Problem	Causes/check procedures	Corrective measures
(1) No primary paper feed.	Check if the surfaces of the following rollers are dirty with paper powder. Forwarding pulley Paper feed pulley MP paper feed pulley	Clean with isopropyl alcohol.
	Check if the following rollers is deformed. Forwarding pulley Paper feed pulley MP paper feed pulley	Check visually and replace any deformed (see page 1-5-11).
	Defective paper feed clutch 1, 2 or MP paper feed clutch installation.	Check visually and remedy if necessary.
(2) No secondary paper feed.	Check if the surfaces of the following rollers are dirty with paper powder. Right registration roller Left registration roller	Clean with isopropyl alcohol.
	Defective registration motor installation. (45 ppm/55 ppm model) Defective registration clutch installation. (30 ppm/35 ppm model)	Check visually and remedy if necessary.
(3) Skewed paper feed.	Paper width guide in a cassette installed incorrectly.	Check the paper width guide visually and remedy or replace if necessary.
(4) Multiple sheets of paper are fed.	Check if the paper is excessively curled.	Change the paper.
	Paper is loaded incorrectly.	Load the paper correctly.
	Check if the separation pulley is worn.	Replace the separation pulley if it is worn (see page 1-5-11).
(5) Paper jams.	Check if the paper is excessively curled.	Change the paper.
	Check if the contact between the right and left registration rollers is correct.	Check visually and remedy if necessary.
	Check if the heat roller or press roller is extremely dirty or deformed.	Check visually and replace the fuser unit (see page 1-5-68).
(6) Toner drops on the paper conveying path.	Check if the drum unit or developer unit is extremely dirty.	Clean the drum unit or developer unit.

Problem	Causes/check procedures	Corrective measures
(7) Abnormal noise is heard.	Check if the rollers, pulleys and gears operate smoothly.	Grease the bushes and gears.
	Check if the following clutches are installed correctly. Paper feed clutch 1, 2 Assist clutch 1, 2*1 Paper conveying clutch MP paper feed clutch Registration clutch*2 Middle clutch*2 Duplex clutch 1, 2*2 *1: 45 ppm/55 ppm model only *2: 30 ppm/35 ppm model only	Check visually and remedy if necessary.

1-4-10 Send error code

This section describes the scanning errors and descriptions, preventive actions, as well as corrective actions.
Error codes not described here could fall within software errors.
If such an error is encountered, turn power off then on, and advise the service representative.

(1) Scan to SMB error codes

Code	Contents	Check procedures/corrective measures
1101	Host destined does not exist on the network.	1. Confirm destined host. 2. Confirm device's network parameters. 3. Confirm the network parameters the device is connected.
1102	Login to the host has failed.	1. Confirm user name and password. 2. Confirm the network parameters the device is connected. 3. Check the host if the folder is properly shared.
1103	Destined host, folder, and/or file names are invalid.	1. Check illegal characters are not contained within these names. 2. Check the name of the folder and files conform with the naming syntax. 3. Confirm destined host and folder.
1105	SMB protocol is not enabled.	1. Confirm device's SMB protocols.
2101	Login to the host has failed.	1. Confirm destined host. 2. Confirm that the LAN cable is properly connected to the device. 3. Check the SMB port number. 4. Confirm device's network parameters. 5. Confirm the network parameters the device is connected.
2201	Writing scanned data has failed.	1. Check the scanning file name. 2. Confirm device's network parameters. 3. Confirm the network parameters the device is connected.
2203	No response from the host during a certain period of time.	1. Confirm the network parameters the device is connected. 2. Confirm that the LAN cable is properly connected to the device.

(2) Scan to FTP error codes

Code	Contents	Check procedures/corrective measures
1101	FTP server does not exist on the network.	1. Check the FTP server name. 2. Confirm device's network parameters. 3. Confirm the network parameters the device is connected.
1102	Login to the FTP server has failed.	1. Confirm user name and password. 2. Check the FTP server name.
1103	Destined folder is invalid.	1. Check illegal characters are not contained within these names. 2. Check the FTP server name.
1105	FTP protocol is not enabled.	1. Confirm device's FTP protocols.
1131	Initializing TLS has failed.	1. Confirm device's security parameters.
1132	TLS negotiation has failed.	1. Confirm device's security parameters. 2. Check the FTP server name.
2101	Access to the FTP server has failed.	1. Check the FTP server name. 2. Confirm that the LAN cable is properly connected to the device. 3. Check the FTP port number. 4. Confirm device's network parameters. 5. Confirm the network parameters the device is connected. 6. Check the FTP server name.
2102	Access to the FTP server has failed. (Connection timeout)	1. Check the FTP server name. 2. Check the FTP port number. 3. Confirm device's network parameters. 4. Confirm the network parameters the device is connected. 5. Check the FTP server name.
2103	The server cannot establish communication.	1. Check the FTP server name. 2. Check the FTP port number. 3. Confirm device's network parameters. 4. Confirm the network parameters the device is connected. 5. Check the FTP server name.
2201	Connection with the FTP server has failed.	1. Confirm device's network parameters. 2. Confirm the network parameters the device is connected. 3. Confirm destined folder. 4. Check the FTP server name.
2202	Connection with the FTP server has failed. (Timeout)	1. Confirm device's network parameters. 2. Confirm the network parameters the device is connected.
2203	No response from the server during a certain period of time.	1. Confirm device's network parameters. 2. Confirm the network parameters the device is connected.

Code	Contents	Check procedures/corrective measures
2231	Connection with the FTP server has failed. (FTPS communication)	1. Confirm device's network parameters. 2. Confirm the network parameters the device is connected.
3101	FTP server responded with an error.	1. Confirm device's network parameters. 2. Confirm the network parameters the device is connected. 3. Check the FTP server.

(3) Scan to E-mail error codes

Code	Contents	Check procedures/corrective measures
1101	SMTP/POP3 server does not exist on the network.	1. Check the SMTP/POP3 server name. 2. Confirm device's network parameters. 3. Confirm the network parameters the device is connected.
1102	Login to the SMTP/POP3 server has failed.	1. Confirm user name and password. 2. Check the SMTP/POP3 server.
1104	The domain the destined address belongs is prohibited by scanning restriction.	1. Confirm device's SMTP parameters.
1105	SMTP protocol is not enabled.	1. Confirm device's SMTP protocols.
1106	Sender’s address is not specified.	1. Confirm device's SMTP protocols.
2101	Connection to the SMTP/POP3 server has failed.	1. Check the SMTP/POP3 server name. 2. Confirm that the LAN cable is properly connected to the device. 3. Check the SMTP/POP3 port number. 4. Confirm device's network parameters. 5. Confirm the network parameters the device is connected. 6. Check the SMTP/POP3 server.
2102	Connection to the SMTP/POP3 server has failed. (Connection timeout)	1. Check the SMTP/POP3 server name. 2. Check the SMTP/POP3 port number. 3. Confirm device's network parameters. 4. Confirm the network parameters the device is connected. 5. Check the SMTP/POP3 server.
2103	The server cannot establish communication.	1. Check the SMTP/POP3 server name. 2. Check the SMTP/POP3 port number. 3. Confirm device's network parameters. 4. Confirm the network parameters the device is connected. 5. Check the SMTP/POP3 server.
2201	Connection to the SMTP/POP3 server has failed.	1. Confirm device's network parameters. 2. Confirm the network parameters the device is connected.

Code	Contents	Check procedures/corrective measures
2202	Connection to the SMTP/POP3 server has failed. (Timeout)	1. Confirm device's network parameters. 2. Confirm the network parameters the device is connected.
2204	The size of scanning exceeded its limit.	1. Confirm device's network parameters.
3101	SMTP/POP3 server responded with an error.	1. Confirm device's network parameters. 2. Confirm the network parameters the device is connected. 3. Check the SMTP/POP3 server.
3102	Error: Server Response.	1. Check the SMTP/POP3 server. 2. Wait a minute and trye again.
3201	No SMTP authentication is found.	1. Check the SMTP server. The device supports SMTP authentication services including CRAM-MD5, DIGEST-MD5, PLAIN and LOGIN.
4803	Failed to establish the SSL session.	1. Verify the self certificate of the device. 2. Check the server certificate of the SMTP/POP3 server. 3. Check the SMTP/POP3 configuration of the device and the SMTP/POP3 server.

1-4-11 Error codes

(1) Error code

Error codes are listed on the communication reports, activity report, etc. The codes consist of an error code indication U followed by a 5-digit number. (Error codes for V34 communication errors start with an E indication, followed by five digits.)
The upper three of the five digits indicate general classification of the error and its cause, while the lower two indicate the detailed classification. Items for which detailed classification is not necessary have 00 as the last two digits.

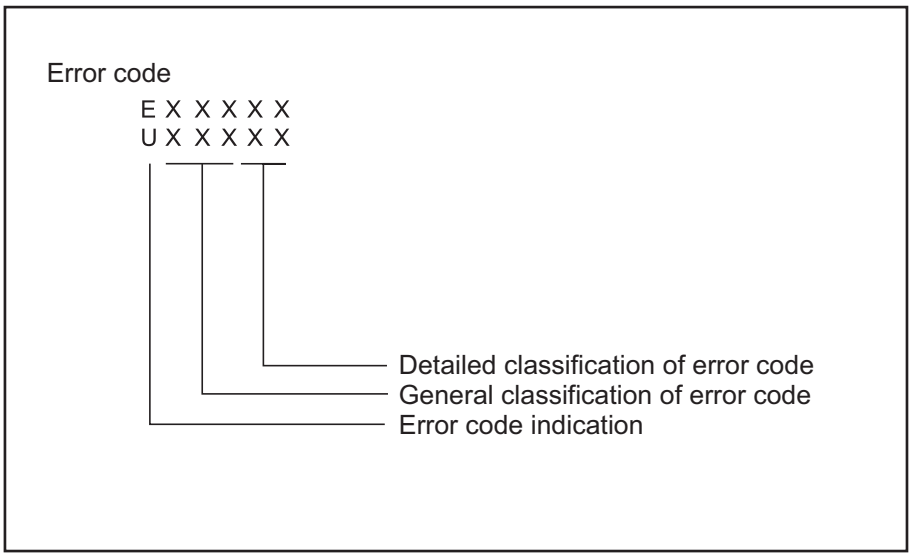

Figure 1-4-7

(2) Table of general classification

Error code	Description
U00000/E00000	No response or busy after the set number of redials.
U00100/E00100	Transmission was interrupted by a press of the stop/clear key.
U00200/E00200	Reception was interrupted by a press of the stop/clear key.
U00300/E00300	Recording paper on the destination unit has run out during transmission.
U004XX/E004XX	A connection was made but interrupted during handshake with the receiver unit (refer to P.1-4-309 U004XX error code table).
U006XX/E006XX	Communication was interrupted because of a machine problem (refer to P.1-4-309 U006XX error code table).
U00700/E00700	Communication was interrupted because of a problem in the destination unit.
U008XX/E008XX	A page transmission error occurred in G3 mode (refer to P.1-4-309 U008XX error code table).
U009XX/E009XX	A page reception error occurred in G3 mode (refer to P.1-4-309 U009XX error code table).
U010XX/E010XX	Transmission in G3 mode was interrupted by a signal error (refer to P.1-4-310 U010XX error code table).
U011XX/E011XX	Reception in G3 mode was interrupted by a signal error (refer to P.1-4-311 U011XX error code table).
U01400/E01400	An invalid one-touch key was specified during communication.
U01500/E01500	A communication error occurred when calling in V.8 mode.
U01600/E01600	A communication error occurred when called in V.8 mode.
U017XX/E017XX	A communication error occurred before starting T.30 protocol during transmission in V.34 mode (refer to P.1-4-312 U017XX error code table).
U018XX/E018XX	A communication error occurred before starting T.30 protocol during reception in V.34 mode (refer to P.1-4-312 U018XX error code table).
U03000/E03000	No document was present in the destination unit when polling reception started.
U03200/E03200	In interoffice subaddress-based bulletin board reception, data was not stored in the box specified by the destination unit.
U03300/E03300	In polling reception from a unit of our make, operation was interrupted due to a mismatch in permit ID or telephone number. Or, in interoffice subaddress-based bulletin board reception, operation was interrupted due to a mismatch in permit ID or telephone number.
U03400/E03400	Polling reception was interrupted because of a mismatch in individual numbers (destination unit is either of our make or by another manufacturer).
U03500/E03500	In interoffice subaddress-based bulletin board reception, the specified Subaddress confidential box number was not registered in the destination unit.
U03600/E03600	An interoffice subaddress-based bulletin board reception was interrupted because of a mismatch in the specified subaddress confidential box number.
U03700/E03700	Interoffice subaddress-based bulletin board reception failed because the destination unit had no subaddress-based bulletin board transmission capability, or data was not stored in any subaddress confidential box in the destination unit.

Error code	Description
U04000/E04000	In interoffice subaddress-based transmission mode, the specified subaddress box number was not registered in the destination unit.
U04100/E04100	Subaddress-based transmission failed because the destination unit had no subaddress-based reception capability.
U04200/E04200	In encrypted transmission, the specified encryption box was not registered in the destination unit.
U04300/E04300	Encrypted transmission failed because the destination unit had no encrypted communication capability.
U04400/E04400	Encrypted transmission was interrupted because encryption keys did not agree.
U04500/E04500	Encrypted reception was interrupted because of a mismatch in encryption keys.
U05100/E05100	Password check transmission or restricted transmission was interrupted because the permit ID's did not agree with.
U05200/E05200	Password check reception or restricted reception was interrupted because the permit ID's did not match, the rejected FAX number's did match, or the destination receiver did not return its phone number.
U05300/E05300	The password check reception or the restricted reception was interrupted because the permitted numbers did not match, the rejected numbers did match, or the machine in question did not acknowledge its phone number.
U14000/E14000	Memory overflowed during confidential reception. Or, in subaddress-based confidential reception, memory overflowed.
U14100/E14100	In interoffice subaddress-based transmission, memory overflowed in the destination unit.
U19000/E19000	Memory overflowed during memory reception.
U19100/E19100	Memory overflowed in the destination unit during transmission.
U19300/E19300	Transmission failed because an error occurred during JBIG encoding.

(2-1) U004XX error code table: Interrupted phase B

Error code	Description
U00430/E00430	Polling request was received but interrupted because of a mismatch in permit number. Or, subaddress-based bulletin board transmission request was received but interrupted because of a mismatch in permit ID in the transmitting unit.
U00431/E00431	An subaddress-based bulletin board transmission was interrupted because the specified subaddress confidential box was not registered.
U00432/E00432	An subaddress-based bulletin board transmission was interrupted because of a mismatch in Subaddress confidential box numbers.
U00433/E00433	Subaddress-based bulletin board transmission request was received but data was not present in the subaddress confidential box.
U00440/E00440	Subaddress-based confidential reception was interrupted because the specified subaddress box was not registered.
U00450/E00450	The destination transmitter disconnected because the permit ID's did not agree with while the destination transmitter is in password-check transmission or restricted transmission.
U00460/E00460	Encrypted reception was interrupted because the specified encryption box number was not registered.
U00462/E00462	Encrypted reception was interrupted because the encryption key for the specified encryption box was not registered.

(2-2) U006XX error code table: Problems with the unit

Error code	Description
U00601/E00601	Document jam or the document length exceeds the maximum.
U00613/E00613	Image writing section problem
U00656/E00656	Data was not transmitted to a modem error.
U00690/E00690	System error.

(2-3) U008XX error code table: Page transmission error

Error code	Description
U00800/E00800	A page transmission error occurred because of reception of a RTN or PIN signal.
U00811/E00811	A page transmission error reoccurred after retry of transmission in the ECM mode.

(2-4) U009XX error code table: Page reception error

Error code	Description
U00900/E00900	An RTN or PIN signal was transmitted because of a page reception error.
U00910/E00910	A page reception error remained after retry of transmission in the ECM mode.

(2-5) U010XX error code table: G3 transmission

Error code	Description
U01000/E01000	An FTT signal was received for a set number of times after TCF signal transmission at 2400 bps. Or, an RTN signal was received in response to a Q signal (excluding EOP) after transmission at 2400 bps.
U01001/E01001	Function of the unit differs from that indicated by a DIS signal.
U01016/E01016	An MCF signal was received but no DIS signal was received after transmission of an EOM signal, and T1 timeout was detected.
U01019/E01019	No relevant signal was received after transmission of a CNC signal, and the preset number of command retransfers was exceeded (between units of our make).
U01020/E01020	No relevant signal was received after transmission of a CTC signal, and the preset number of command retransfers was exceeded (ECM).
U01021/E01021	No relevant signal was received after transmission of an EOR.Q signal, and the preset number of command retransfers was exceeded (ECM).
U01022/E01022	No relevant signal was received after transmission of an RR signal, and the preset number of command retransfers was exceeded (ECM).
U01028/E01028	T5 time-out was detected during ECM transmission (ECM).
U01052/E01052	A DCN signal was received after transmission of an RR signal (ECM).
U01080/E01080	A PIP signal was received after transmission of a PPS.NULL signal.
U01092/E01092	During transmission in V.34 mode, communication was interrupted because of an impossible combination of the symbol speed and communication speed.
U01093/E01093	A DCN or other inappropriate signal was received during phase B of transmission.
U01094/E01094	The preset number of command retransfers for DCS/NSS signals was exceeded during phase B of transmission.
U01095/E01095	No relevant signal was received after transmission of a PPS (Q) signal during phase D of transmission, and the preset number of command transfers was exceeded.
U01096/E01096	A DCN signal or invalid command was received during phase D of transmission.
U01097/E01097	The preset number of command retransfers was exceeded after transmission of an RR signal or no response.

(2-6) U011XX error code table: G3 reception

Error code	Description
U01100/E01100	Function of the unit differs from that indicated by a DCS signal.
U01101/E01101	Function of the unit (excl. communication mode select) differs from that indicated by an NSS signal.
U01102/E01102	A DTC (NSC) signal was received when no transmission data was in the unit.
U01110/E01110	No response after transmission of a DIS signal.
U01111/E01111	No response after transmission of a DTC (NSC) signal.
U01113/E01113	No response after transmission of an FTT signal.
U01125/E01125	No response after transmission of a CNS signal (between units of our make).
U01129/E01129	No response after transmission of an SPA signal (short protocol).
U01141/E01141	A DCN signal was received after transmission of a DTC signal.
U01143/E01143	A DCN signal was received after transmission of an FTT signal.
U01155/E01155	A DCN signal was received after transmission of an SPA signal (short protocol).
U01160/E01160	During message reception, transmission time exceeded the maximum transmission time per line.
U01162/E01162	Reception was aborted due to a modem malfunction during message reception.
U01191/E01191	Communication was interrupted because an error occurred during an image data reception sequence in the V.34 mode.
U01193/E01193	There was no response, or a DCN signal or invalid command was received, during phase C/D of reception.
U01194/E01194	A DCN signal was received during phase B of reception.
U01195/E01195	No message was received during phase C of reception.
U01196/E01196	Error line control was exceeded and a decoding error occurred for the message being received.

(2-7) U017XX error code table: V.34 transmission

Error code	Description
U01700/E01700	A communication error occurred in phase 2 (line probing).
U01720/E01720	A communication error occurred in phase 4 (modem parameter exchange).
U01721/E01721	Operation was interrupted due to the absence of a common communication speed between units.

U01700/E01700: A communication error that occurs at the transmitting unit in the period after transmission of INFO0 before entering phase 3 (primary channel equivalent device training). For example, INFO0/A/Abar (B/Bbar, for polling transmission)/INFOh was not detected.

U01720/E01720: A communication error that occurs at the transmitting unit in the period after initiating the control channel before entering the T.30 process. For example, PPh/ALT/MPh/E was not detected.

U01721/E01721: In the absence of a common communication speed between units (including when an impossible combination of communication speed and symbol speed occurs) after MPh exchange; 1) a DCN signal was received from the destination unit, and the line was cut; or 2) a DIS (NSF, CSI) signal was received from the destination unit and, in response to the signal, the unit transmitted a DCN signal, and the line was cut.

(2-8) U018XX error code table: V.34 reception

Error code	Description
U01800/E01800	A communication error occurred in phase 2 (line probing).
U01810/E01810	A communication error occurred in phase 3 (primary channel equivalent device training).
U01820/E01820	A communication error occurred in phase 4 (modem parameter exchange).
U01821/E01821	Operation was interrupted due to the absence of a common communication speed between units.

U01800/E01800: A communication error that occurs at the receiver unit in the period after transmission of INFO0 before entering phase 3 (primary channel equivalent device training). For example, INFO0/B/Bbar (A/Abar, for polling reception)/probing tone was not detected.

U01810/E01810: A communication error that occurs at the receiver unit in phase 3 (primary channel equivalent device training). For example, S/Sbar/PP/TRN was not detected.

U01820/E01820: A communication error that occurs at the receiver unit in the period after initiating the control channel before entering the T.30 process. For example, PPh/ALT/MPh/E was not detected.

U01821/E01821: In the absence of a common communication speed between units (including when an impossible combination of communication speed and symbol speed occurs) after MPh exchange, a DCN signal was transmitted to the destination unit and the line was cut.

1-4-12 Printing System Troubleshooting

(1) List of Erro Code

Problem/ Error code	Condition of detection	Causes	Check procedures/ Corrective measures
1.Error 1020 is displayed.	Error occurs during Bridge Board memory check.	Bridge Board error.	Replace Bridge Board.
2.Error 1030 is displayed.	Timeout for FieryReady signal not received.	Printing system is not powered.	Check power cable connection or replace.
		DVI cable between Fiery Print Controller and MFP is disconnected.	Re-insert/replace DVI cable.
3.Error 1031 is displayed.	Receiving VIDEO from Fiery fails. (IP Exchange failure)	DVI cable between Fiery Print Controller and MFP is disconnected.	Re-insert/replace DVI cable.
		Bridge board error.	Replace Bridge Board.
4.Error 1040 is displayed.	LINKLOCAL connection fails.	Network cable between Fiery Print Controller and MFP is disconnected.	Re-insert/replace network cable.
		Network setting failure.	Check network settings. IPv6: ON HTTP: ON EnhancedWSD: ON
5.Error 2000 is displayed.	Mismatch of ProductID from Fiery.	Unsupported Fiery Print Controller is installed.	Install supported Fiery Print Controller. (Use with correct combination)
		FW version of Main Controller and Fiery Print Controller version do not match.	Check FW version and update FW.
6.Error 2010 is displayed.	CometFPGA version mismatch.	Unsupported Bridge Board is installed.	Replace Bridge Board.
7.Error 2020 is displayed.	FW version mismatch.	FW version of Main Controller and Fiery Print Controller does not match.	Check FW version and update FW.
8.Error 3000 is displayed.	Timeout of ERPD Server boot-up of External RIP Protocol.	Bad data in IP Exchange.	Turn on MFP power again.
			Replace Bridge Board.
			Replace Main Board.
			Replace Fiery Print Controller.

Problem/ Error code	Condition of detection	Causes	Check procedures/ Corrective measures
9.“Fiery” is not shown on the MFP application.	Connection error of the DVI cable (damaged or loose connected).	Defective DVI cable or poor contact.	Reinsert the connector. Also check for continuity within the connector cable. If none, replace the cable.
	Connection error of the network cable (damaged or loose connected).	Local network cable failure or loose connection.Failure or wrong version.	Reinsert the network cable. Also check for continuity within the connector cable. If none, replace the cable.
	Connection error of the network.	Network settings are incorrect with the MFP.	Check network cable connection or replace. [System Menu] →[System] →Enter LoginUserName and LoginPassword and login. →[NetWork] →[TCP/IP Setting] TCP/IP :ON IPv4 DHCP :ON AutoIP :ON IPv6 :ON →[Protocol Settings] HTTP :ON Enhanced WSD :ON
		Network settings are incorrect with the PC.	Perform the following steps. [Network Connection] on the control panel →[Local Area Connection] (Properties) →[Internet Protocol] (TCP/IP) (Properties) →Check [Resolve the IP address automatically].
	FW version mismatch.	The version does not match with the MFP firmware and the Printing system firmware.	See item 7 above.

Problem/ Error code	Condition of detection	Causes	Check procedures/ Corrective measures
9.“Fiery” is not shown on the MFP application.	Connection error of the harness between the Main board and the bridge board(damaged or loose connected).	Wiring failure or loose connection.	Reinsert the connector. Also check for continuity within the connector cable. If none, replace the cable.
	Defective bridge board.	Bridge board mounting error.	Replace the bridge board and check for correct operation.
	Defective main board.	Main board mounting error.	Replace the main board and check for correct operation.
	Defective Printing system.	Board mounting failure in the Printing system.	Replace the Printig system board and check for correct operation.
10.Fiery is not detectable with Command Work Station.	Connection error of the DVI cable?(damaged or loose connected).	Defective DVI cable or poor contact.	Reinsert the connector. Also check for continuity within the connector cable. If none, replace the cable.
	Connection error of the network cable (damaged or loose connected).	Local network cable failure or loose connection.Failure or wrong version.	Reinsert the network cable. Also check for continuity within the connector cable. If none, replace the cable.
	Connection error of the network.	Network settings are incorrect with the MFP.	See item 9 above.
		Network settings are incorrect with the PC.	See item 9 above.
	FW version mismatch.	The version does not match with the MFP firmware and the Printing system firmware.	See item 7 above.
	Connection error of the harness between the Main board and the Bridge board (damaged or loose connected).	Defective cable or poor contact.	Reinsert the connector. Also check for continuity within the connector cable. If none, replace the cable.
	Defective bridge board.	Bridge board mounting error.	Replace the bridge board.
	Defective main board.	Main board mounting error.	Replace the main board.
	Defective Printing system.	Board mounting failure in the Printing system.	Replace the Printing system.

Problem/ Error code	Condition of detection	Causes	Check procedures/ Corrective measures
11.Printing is not possible with Command Work Station.	Defective bridge board.	Bridge board mounting error.	Replace the bridge board.
	Defective main board.	Main board mounting error.	Replace the main board.
	Defective Printing system.	Board mounting failure in the Printing system.	Replace the Printing system.
12.An abnormal printing occurs when printing from Command Work Station.	Connection error of the harness between the Main board and the Bridge board (damaged or loose connected).	Defective cable or poor contact.	Reinsert the connector. Also check for continuity within the connector cable. If none, replace the cable.
	Defective bridge board.	Bridge board mounting error.	Replace the bridge board and check for correct operation.
	The image data is not entered.	Engine board mounting error.	Replace the engine board and check for correct operation.
	Defective main board.	Main board mounting error.	Replace the main board and check for correct operation.
	Defective Printing system.	Board mounting failure in the Printing system.	Replace the Printing system and check for correct operation.

(2) Remarks on Relay PWB replacement

To remove the FFC from the locked connector, unlock the connector by pressing the lock lever at the triangular mark.
To insert an FFC cable, hold it at both ends and insert it all the way in.

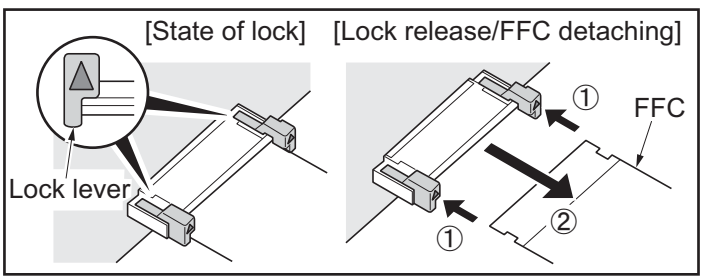

Figure 1-4-8

1-5-1 Precautions for assembly and disassembly

(1) Precautions

Before starting disassembly, press the Power key on the operation panel to off. Make sure that the Power lamp is off before turning off the main power switch. And then unplug the power cable from the wall outlet.
When the fax kit is installed, be sure to disconnect the modular cable before starting disassembly.
When handling PWBs (printed wiring boards), do not touch parts with bare hands.
The PWBs are susceptible to static charge.
Do not touch any PWB containing ICs with bare hands or any object prone to static charge.
When removing the hook of the connector, be sure to release the hook.
Take care not to get the cables caught.
To reassemble the parts, use the original screws. If the types and the sizes of screws are not known, refer to the PARTS LIST.

(2) Drum

Note the following when handling or storing the drum.
When removing the drum unit, never expose the drum surface to strong direct light.
Keep the drum at an ambient temperature between -20°C/-4°F and 40°C/104°F and at a relative humidity not higher than 85% RH. Avoid abrupt changes in temperature and humidity.
Avoid exposure to any substance which is harmful to or may affect the quality of the drum.
Do not touch the drum surface with any object. Should it be touched by hands or stained with oil, clean it.

(3) Toner

Store the toner container in a cool, dark place.
Avoid direct light and high humidity.

(4) How to tell a genuine Kyocera toner container

As a means of brand protection, the Kyocera toner container utilizes an optical security technology to enable visual validation. A validation viewer is required to accomplish this.

Hold the validation viewer over the left side part of the brand protection seal on the toner container. Through each window of the validation viewer, the left side part of the seal should be seen as follows:

A black-colored band when seen through the left side window (●)

A shiny or gold-colored band when seen through the right side window (☼)

The above will reveal that the toner container is a genuine Kyocera branded toner container, otherwise, it is a counterfeit.

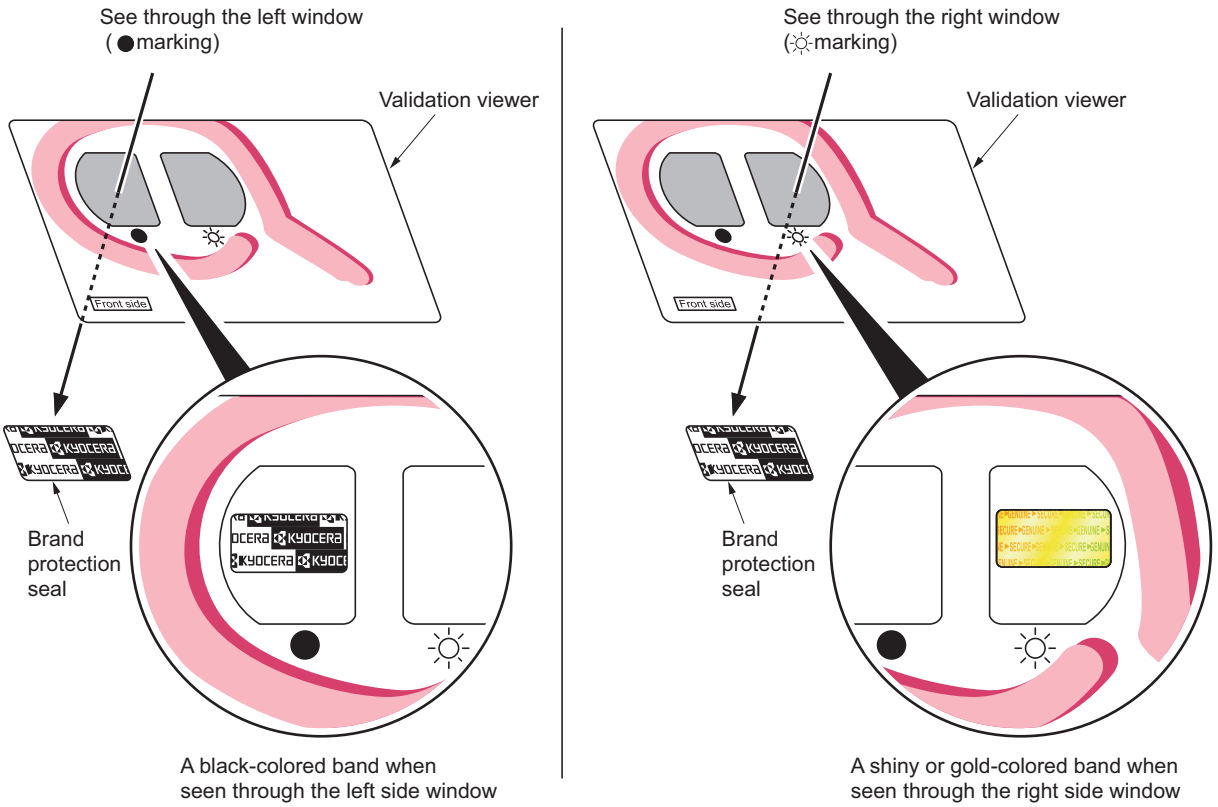

Figure 1-5-1

The brand protection seal has an incision as shown below to prohibit reuse.

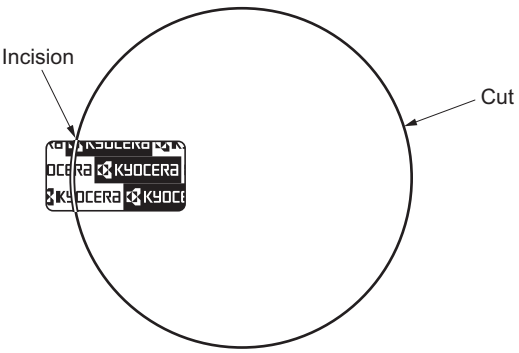

Figure 1-5-2

1-5-2 Outer covers

(1) Detaching and refitting the rear upper cover

Procedure

1. Remove nine screws and then remove the rear upper cover.

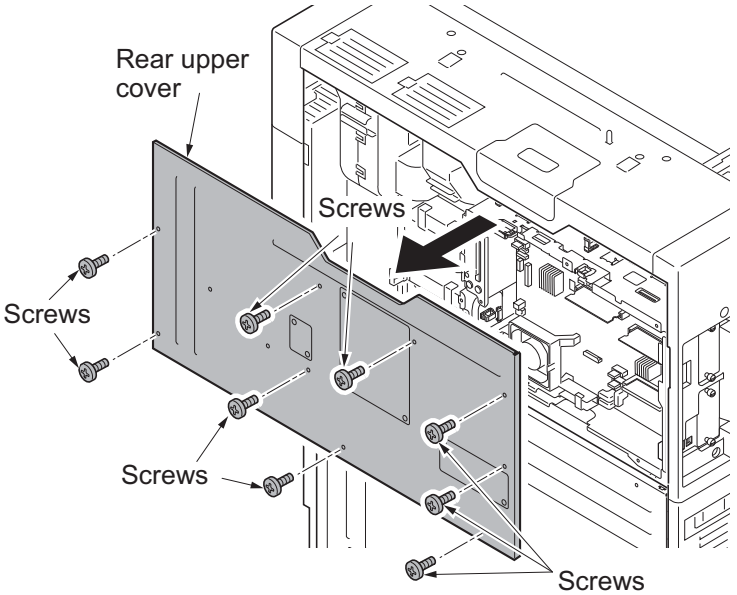

Figure 1-5-3

(2) Detaching and refitting the rear lower cover

Procedure

2. Remove nine screws.
3. Release two hanging parts and then remove the rear lower cover.

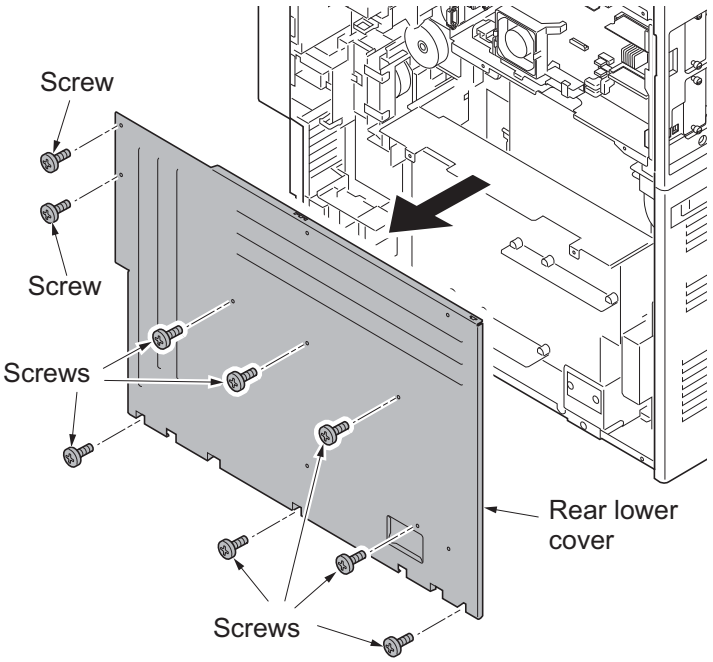

Figure 1-5-4

(3) Detaching and refitting the left upper cover

Procedure

1. Remove four screws.
2. Unhook two hooks and then remove the left upper cover.

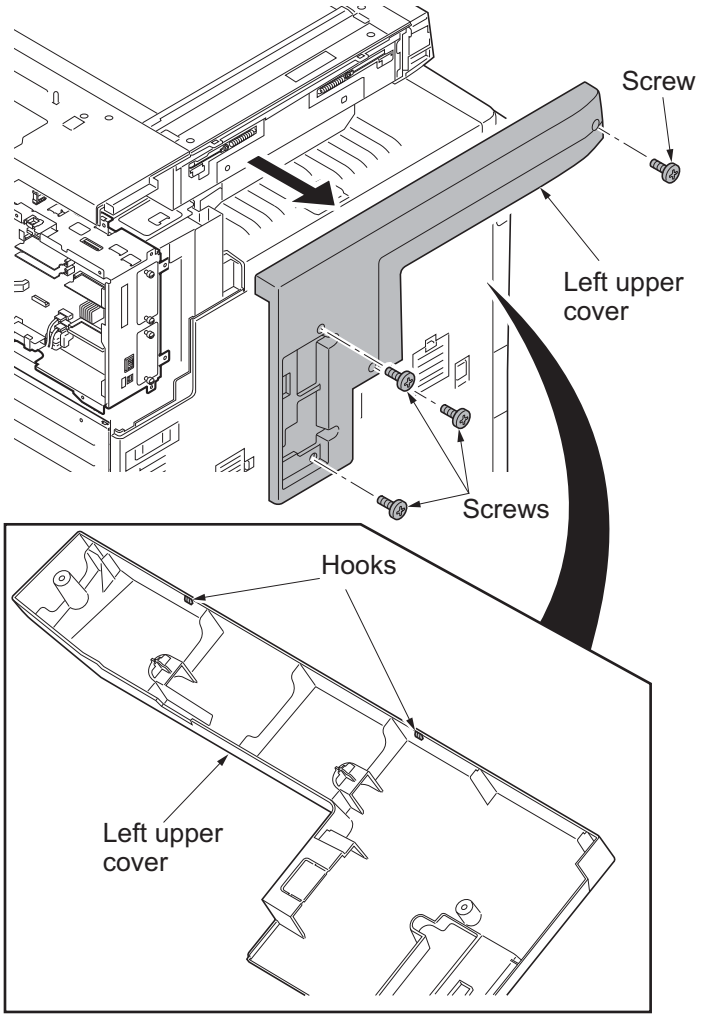

Figure 1-5-5

(4) Detaching and refitting the right lower cover

Procedure

1. Pull the cassette 1 and cassette 2 out completely.
2. Pull the paper conveying unit out.
3. Open the right lower cover.
4. Remove the strap and then remove the right lower cover.

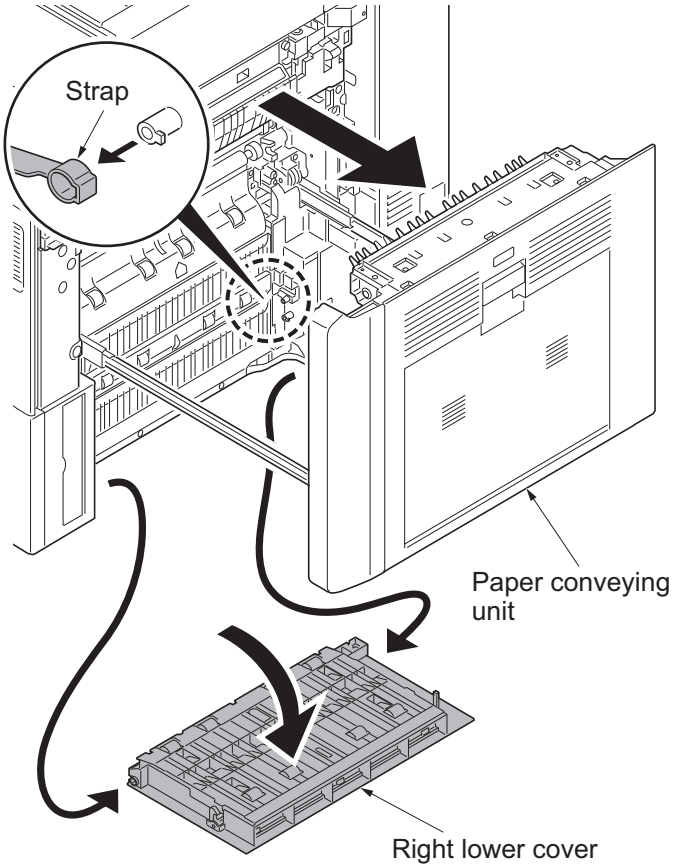

Figure 1-5-6

(5) Detaching and refitting the right middle rear cover or right lower rear cover

Procedure

1. Remove the rear upper cover and the rear lower cover (see page 1-5-3).
2. Pull the paper conveying unit out.
3. Remove the screw A and then remove the right middle rear cover.
4. Remove three screws B and then remove the right lower rear cover.

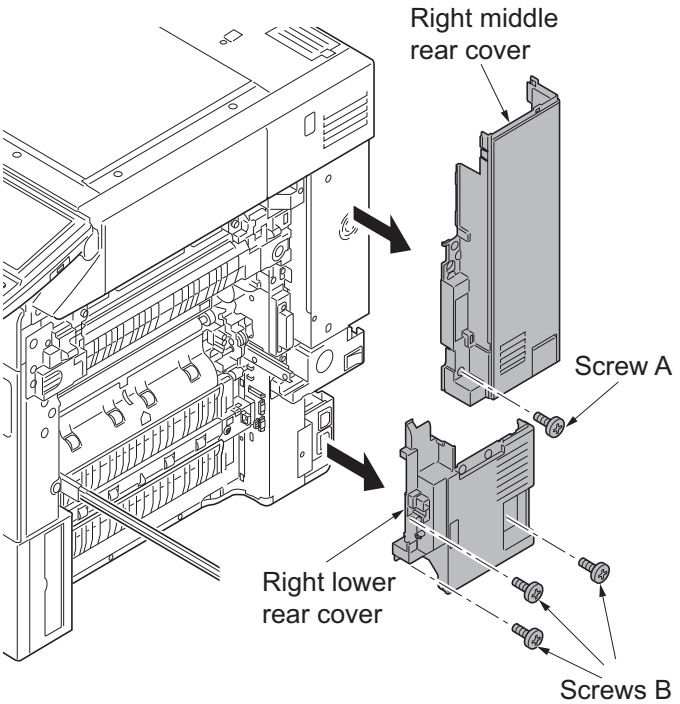

Figure 1-5-7

(6) Detaching and refitting the right lower front cover

Procedure

1. Pull the paper conveying unit out.
2. Open the handle cover.
3. Remove three screws.
4. Unhook the hook and then remove the right lower front cover.

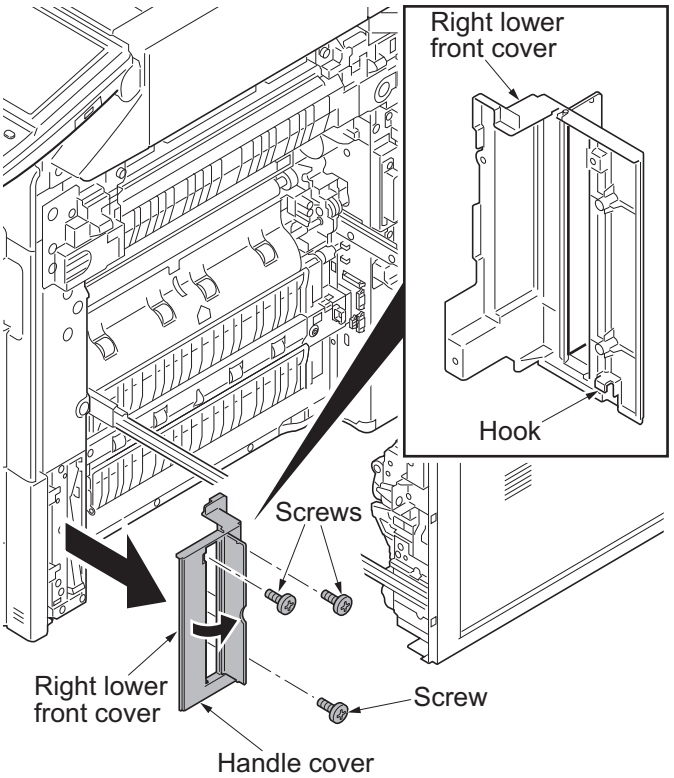

Figure 1-5-8

(7) Detaching and refitting the right cover and DU cover assembly

Procedure

1. Pull the paper conveying unit out.
2. Open the MP tray.
3. Remove four screws.

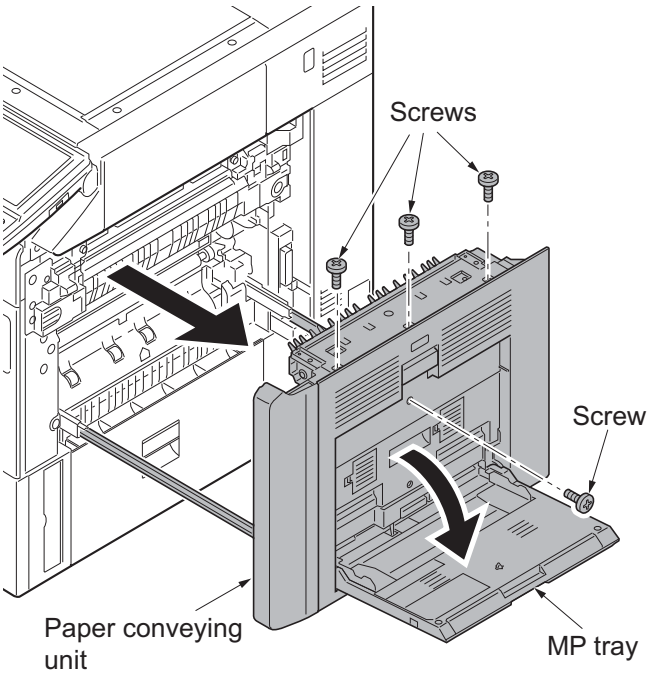

Figure 1-5-9

4. Unhook eight hooks and then remove the right cover and DU cover assembly.

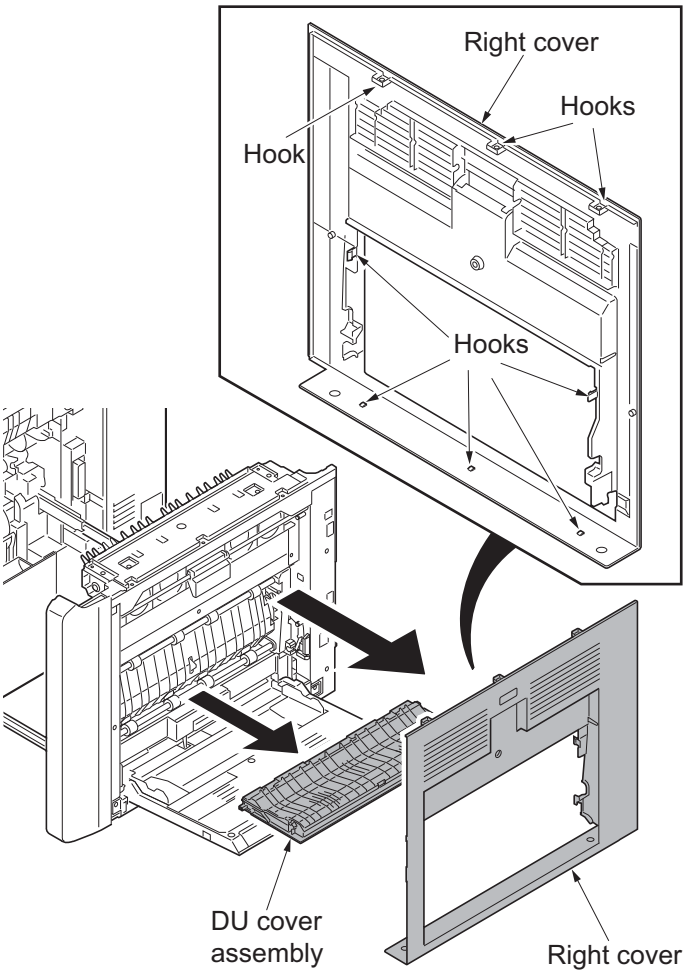

Figure 1-5-10

(8) Detaching and refitting the right front cover

Procedure

1. Pull the paper conveying unit out.
2. Remove three screws.
3. Unhook three hooks and then remove the right front cover.

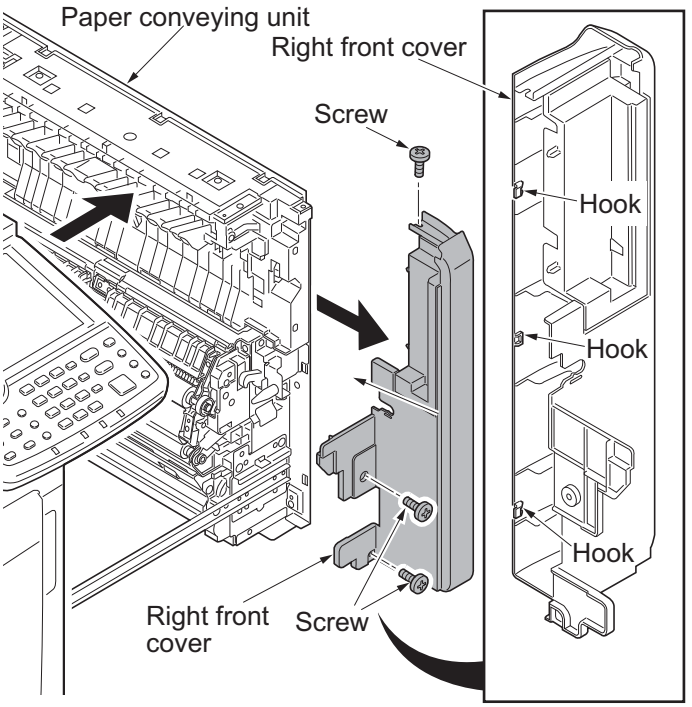

Figure 1-5-11

(9) Detaching and refitting the fuser IH PWB cover and IH electric wire cover

Procedure

1. Remove the rear upper cover and the rear lower cover (see page 1-5-3).
2. Pull the paper conveying unit out.
3. Remove the right middle rear cover.
4. Remove four screws and the remove the fuser IH PWB cover.
5. Remove the IH electric wire cover.

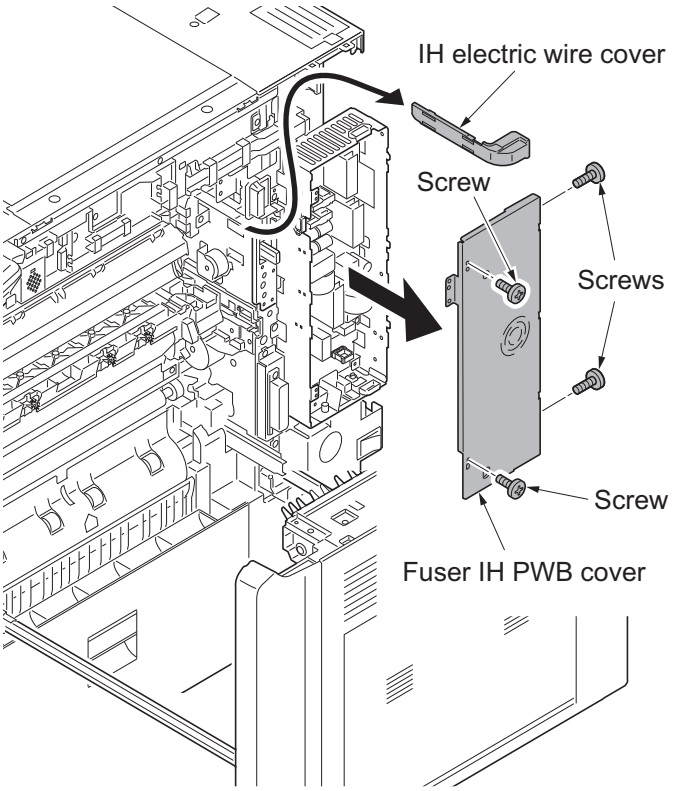

Figure 1-5-12

(10)Detaching and refitting the ISU front cover and ISU right cover

Procedure

1. Remove the original cover or the document processor.
2. Remove the the staple holder. Remove the screw and then remove the staple cover (see page 1-2-76).
3. Remove the hook and remove the upper cover B (see page 1-2-77).
4. Remove two pins and then remove the ISU front cover.
5. Remove two screws and then remove the ISU right cover.

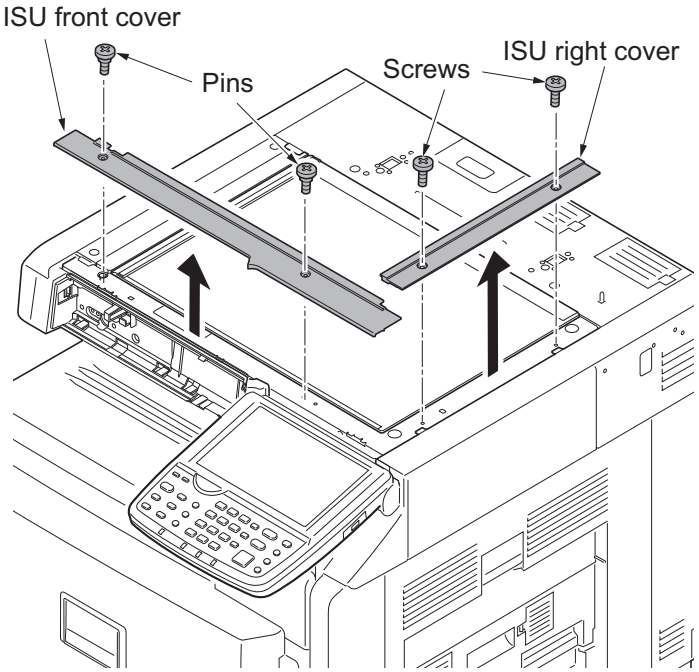

Figure 1-5-13

(11)Detaching and refitting the ISU right cover and right upper cover

Procedure

1. Remove two screws and then remove the ISU right cover.
2. Pull the paper conveying unit out.
3. Remove the screw and five hooks and then remove the right upper cover.

*: Unlatch the stoppers with the rear bottom one first.

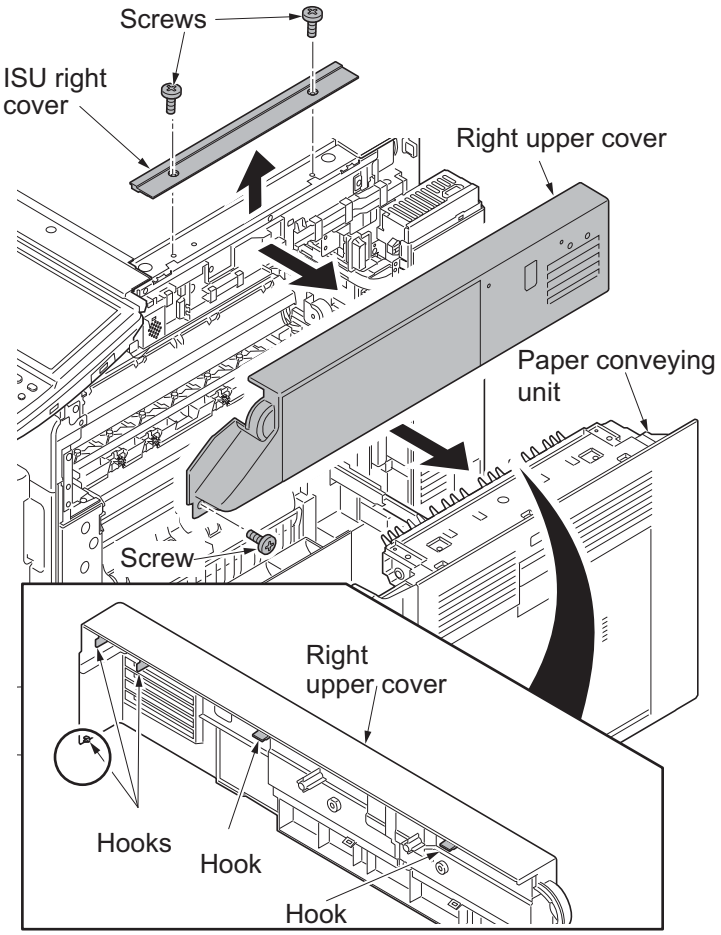

Figure 1-5-14

(12)Detaching and refitting the ISU rear cover

Procedure

1. Remove the left upper cover (see page 1-5-4).
2. Remove the right upper cover .
3. Remove two screws and then remove the ISU rear cover.

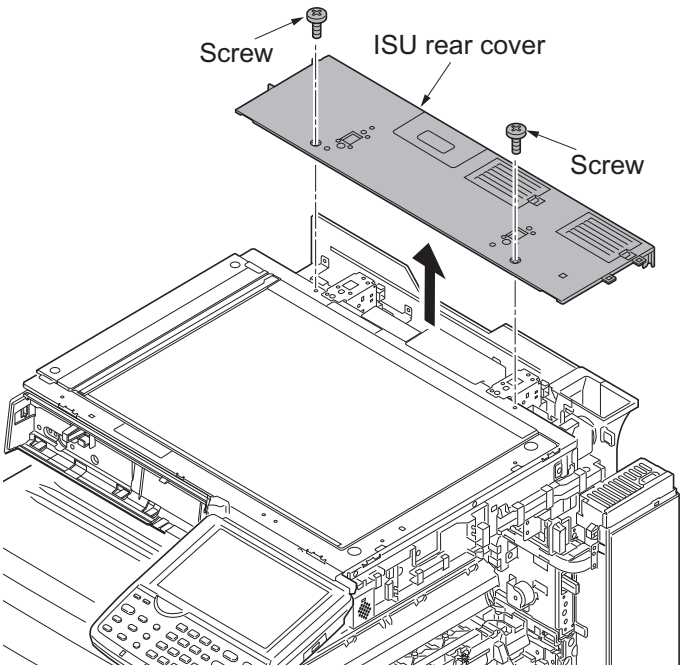

Figure 1-5-15

(13)Detaching and refitting the left cover

Procedure

1. Remove the left upper cover. (see page 1-5-4)
2. Remove the Toner filter.
3. Remove the left filter cover and the left filter.

*: for 45 ppm/55 ppm model only

4. Remove the Trancefer belt filter (2 pices).
5. Remove the left cover lid.
6. Open the front cover,and then remove the screw A.
7. Remove the four screws B,and then remove the left cover.

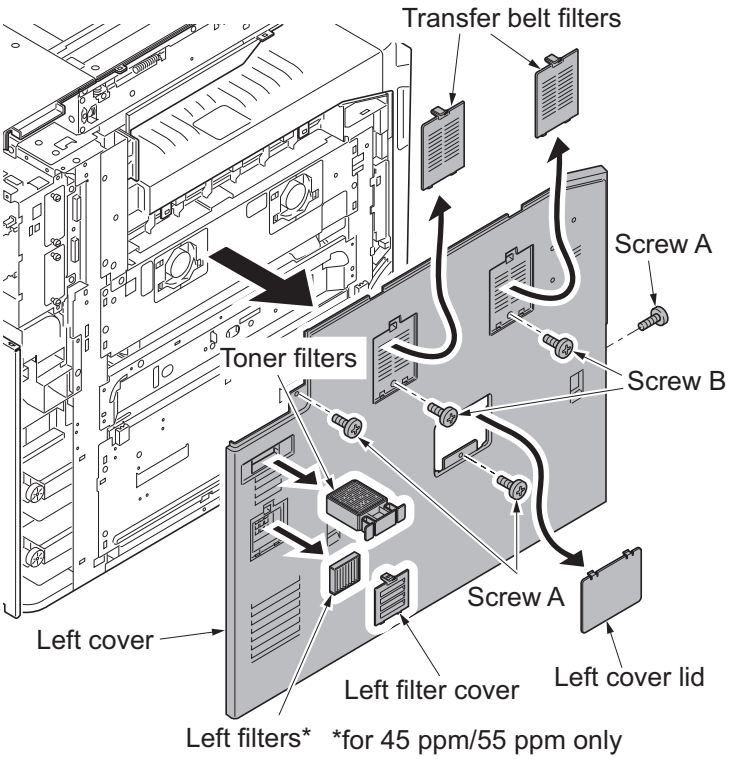

Figure 1-5-16

1-5-3 Paper feed section

(1) Detaching and refitting the primary paper feed unit

Procedure

Detaching remove the primary paper feed unit

1. Pull the cassette 1 and cassette 2 out completely.
2. Pull the paper conveying unit out.
3. Open the right lower cover.
4. Remove the strap and then remove the right lower cover.

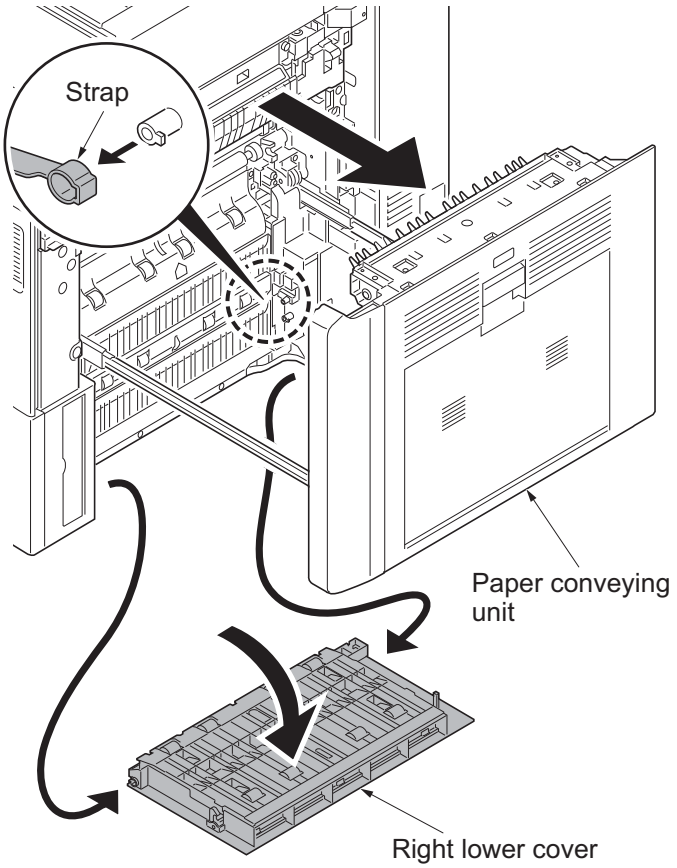

Figure 1-5-17

5. Remove the rear upper cover and the rear lower cover (see page 1-5-3).
6. Remove three screws and then remove the right lower rear cover.

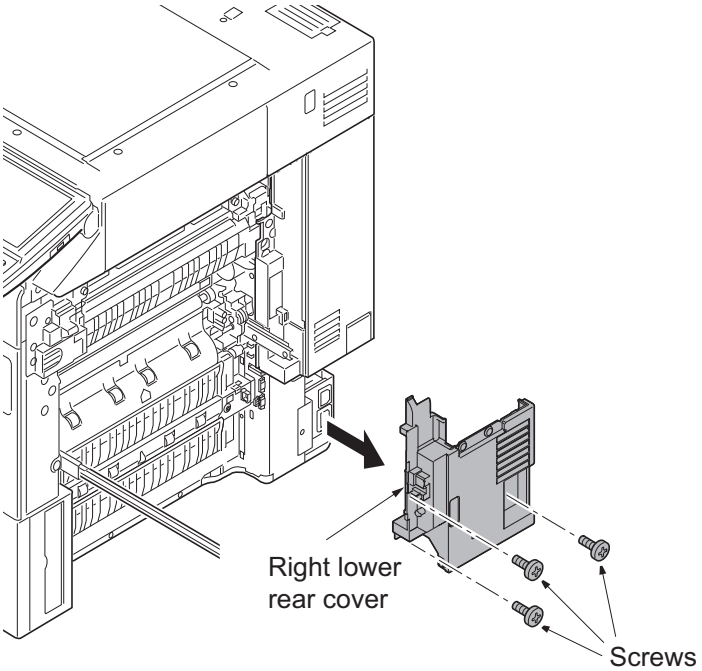

Figure 1-5-18

7. Open the handle cover.
8. Remove three screws.
9. Unhook the hook and then remove the right lower front cover.

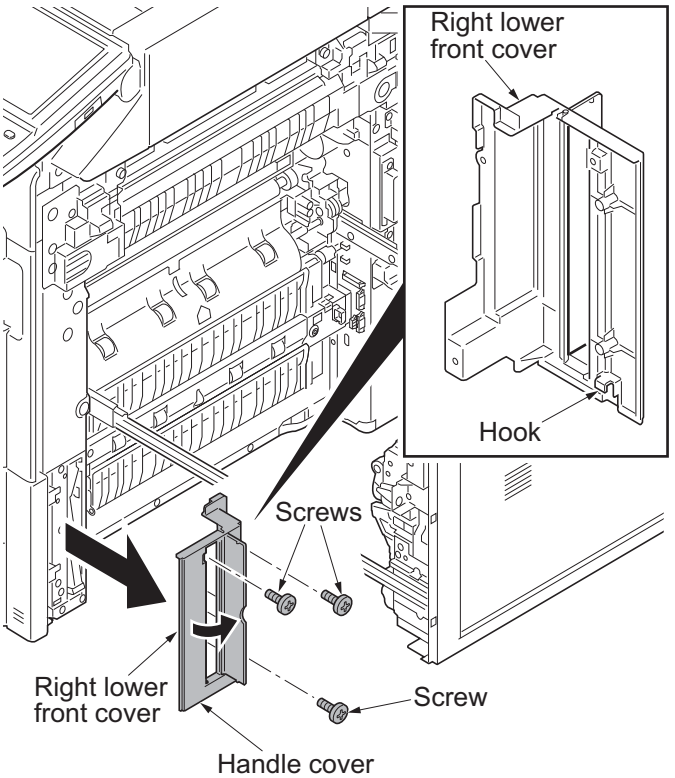

Figure 1-5-19

10. Release the two wire saddles.
11. Remove two connectors.

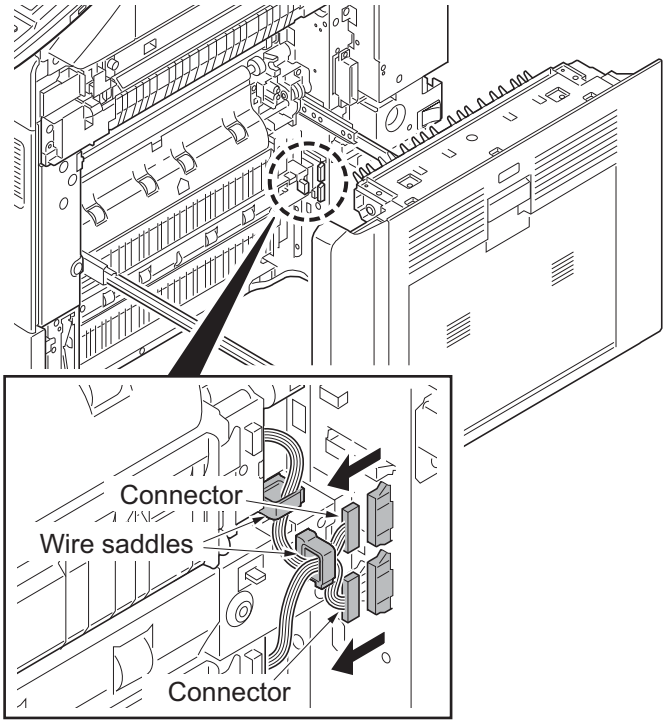

Figure 1-5-20

12. Remove two screws each from primary paper feed unit.
13. Remove the primary paper feed unit.

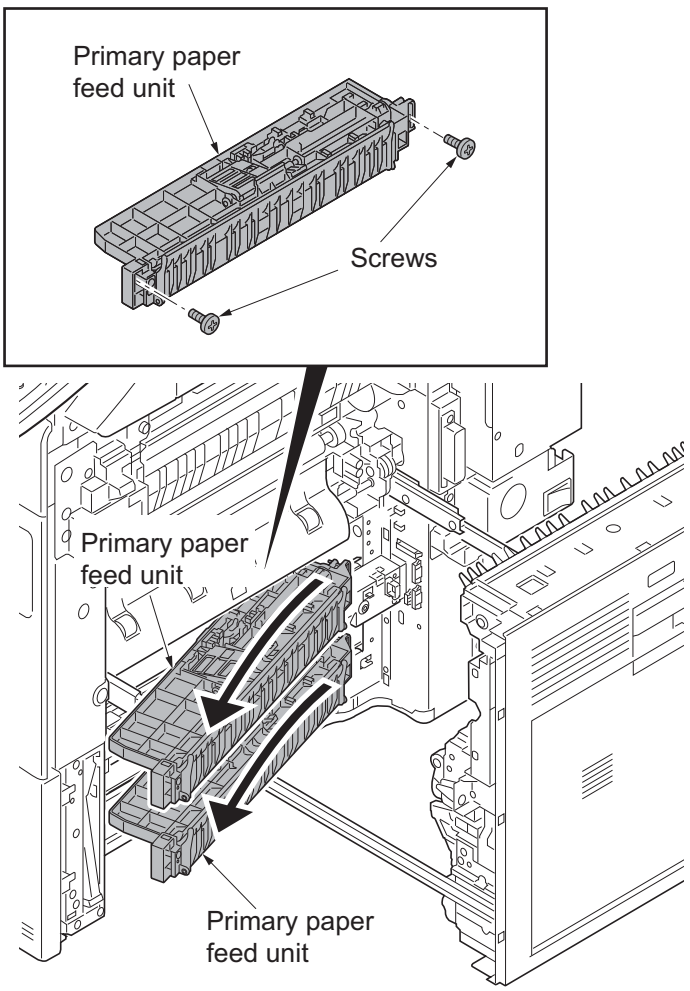

Figure 1-5-21

14. Check or replace the primary paper feed unit and refit all the removed parts.
    *: When refit the primary paper feed unit, you must confirm the inserted pin to the driving coupler.
15. When the primary paper feed unit is replaced,perform maintenance mode U903 (clearing the jam counter) (see page1-3-219).
    Execute Maintenance Counter - Cassette - Counter Clear of U251 (Maintenance counter limits/clear).(see page 1-3-152)

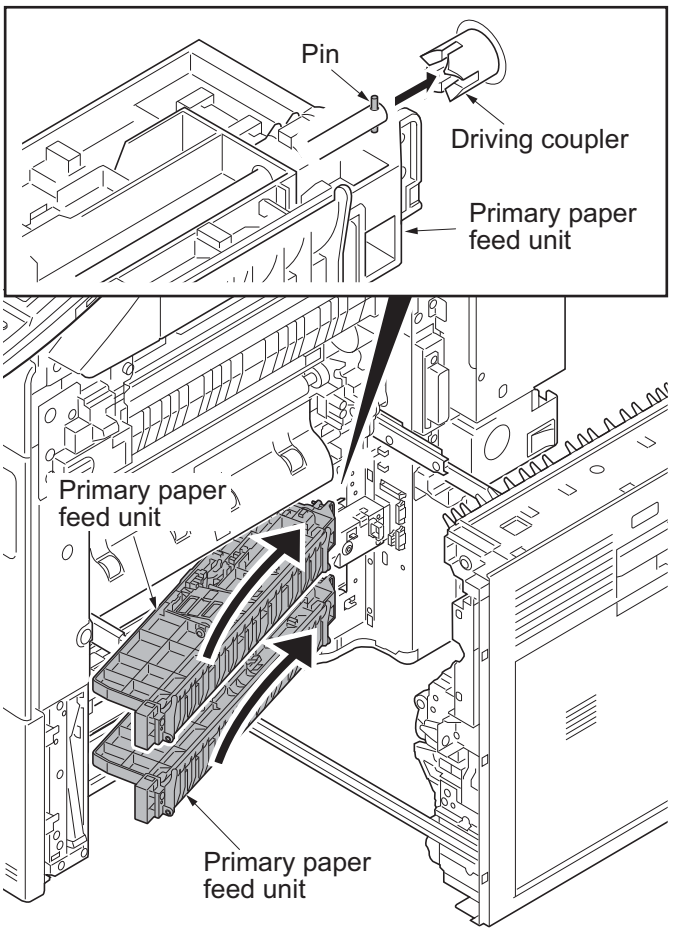

Figure 1-5-22

(2) Detaching and refitting the forwarding pulley, paper feed pulley and separation pulley. [30 ppm model / 35 ppm model]

Procedure

1. Remove the primary paper feed unit (see page 1-5-11).

Detaching the forwarding pulley and paper feed pulley

2. Remove four stop rings.

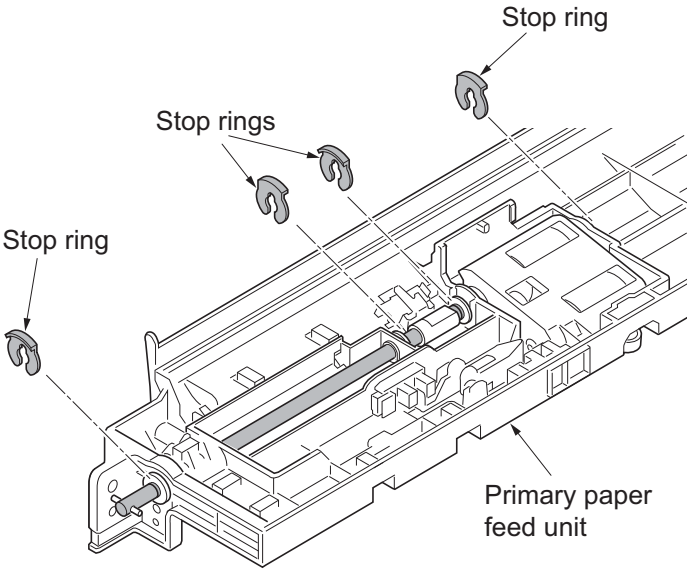

Figure 1-5-23

3. Slide the paper feed pulley shaft.
4. Remove the joint and three bushes.
5. Remove the spring and forwarding pulley holder assembly.

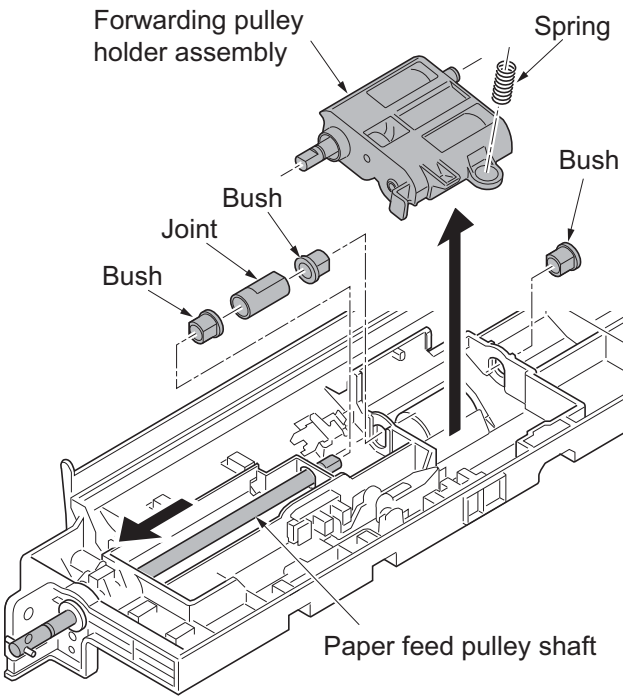

Figure 1-5-24

6. Pull the primary paper feed shaft out from the forwarding pulley holder.
7. Remove the feed gear Z30H OW and paper feed pulley.

*: To refit the feed gear Z30H OW, be sure to correctly align it with the paper feed pulley, so that the on-way clutches meet each other.

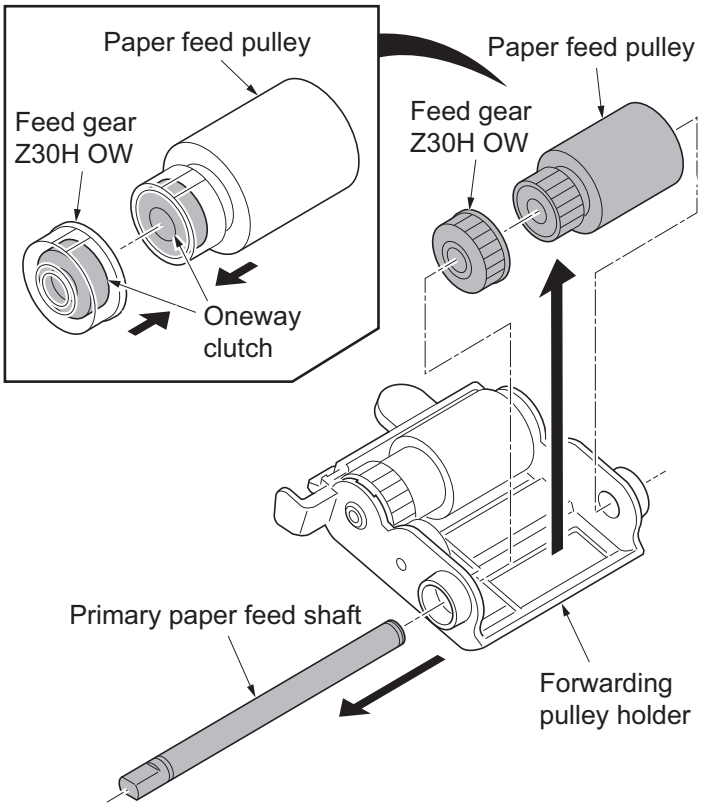

Figure 1-5-25

8. Pull the forwarding pulley from the axis hole of forwarding pulley holder.

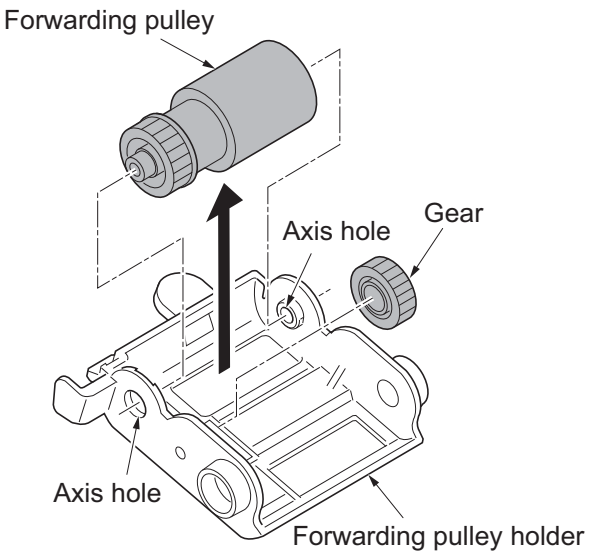

Figure 1-5-26

Detaching the separation pulley

9. Remove the spring.
10. Remove the retard holder from the primary lower plate.

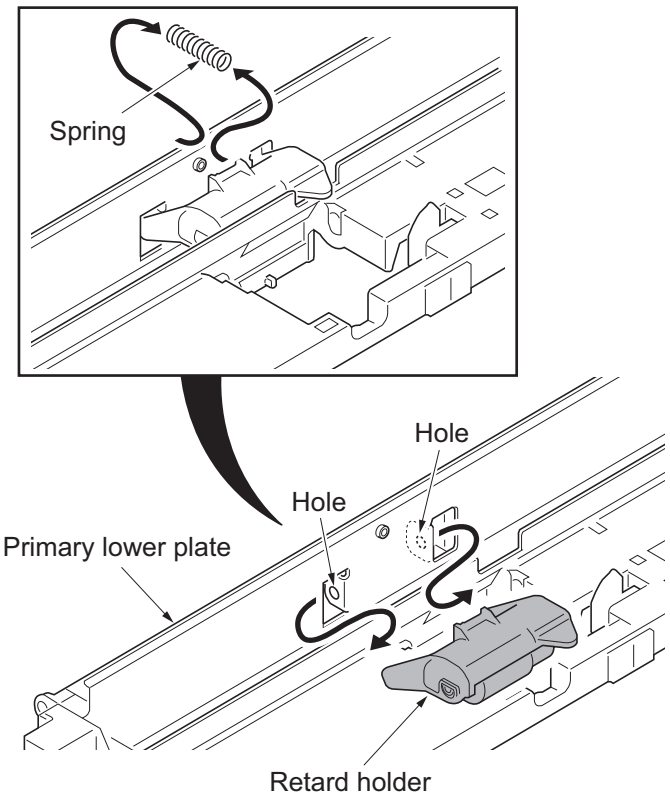

Figure 1-5-27

11. Remove the separation pulley from the retard holder.
12. Clean or replace the forwarding pulley, paper feed pulley and separation pulley.
13. Refit the forwarding pulley, paper feed pulley and separation pulley to the primary paper feed unit.
14. When the forwarding pulley, paper feed pulley or separation pulley is replaced, perform maintenance mode U903 (clearing the jam counter) (see page 1-3-219).
    Execute Maintenance Counter - Cassette - Counter Clear of U251 (Maintenance counter limits/clear).(see page 1-3-152)

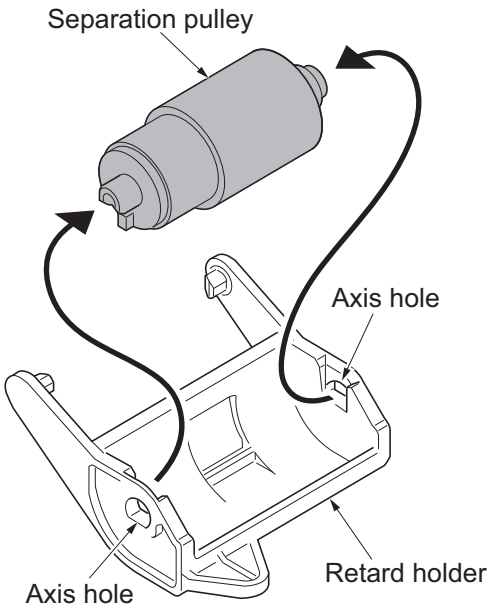

Figure 1-5-28

(3) Detaching and refitting the forwarding pulley, paper feed pulley and separation pulley. [45 ppm model / 55 ppm model]

Procedure

1. Pull the cassette 1 completely.
2. Pull up the cassette.

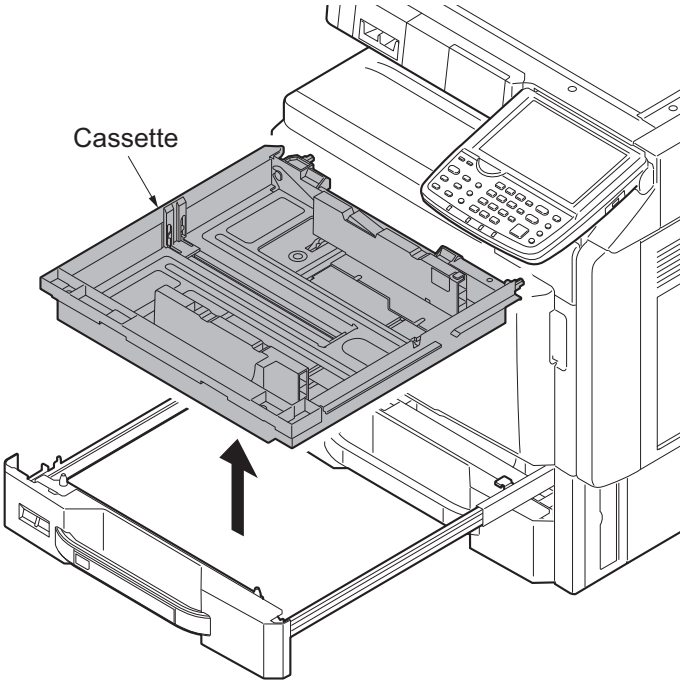

Figure 1-5-29

3. Remove the cassette 2 in the same manner as above.

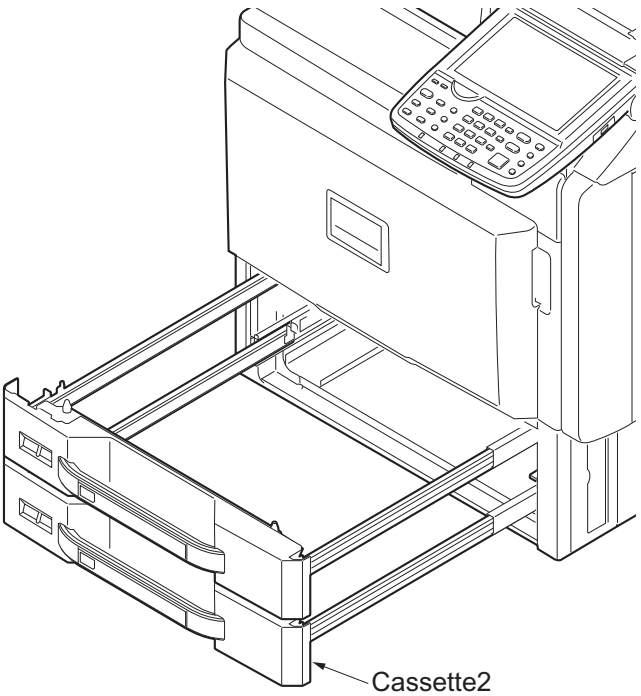

Figure 1-5-30

4. Remove the hook and remove the forward roller from the axle.
5. Remove the hook and remove the feed roller from the axle.

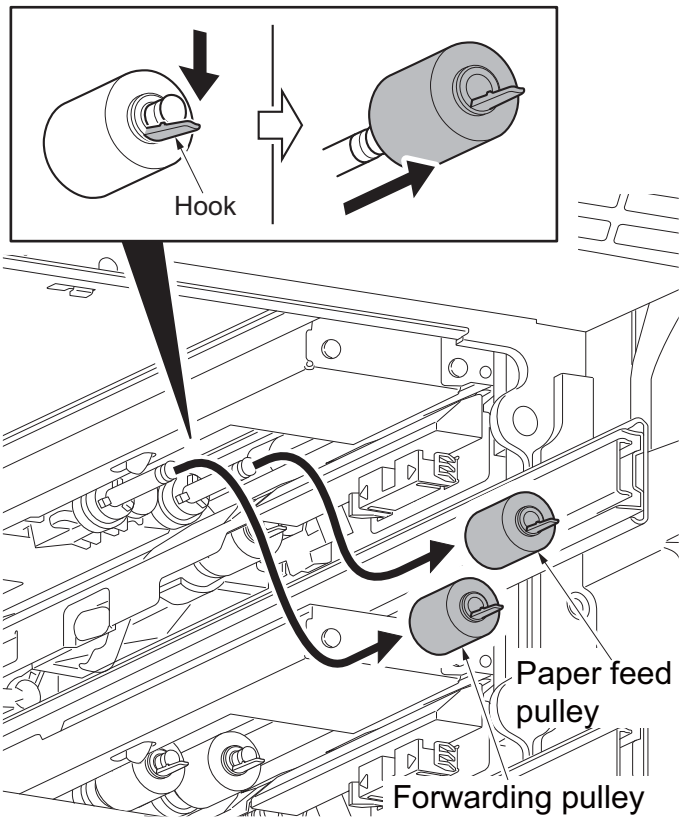

Figure 1-5-31

6. Unhook the two hooks and then remove the cover.

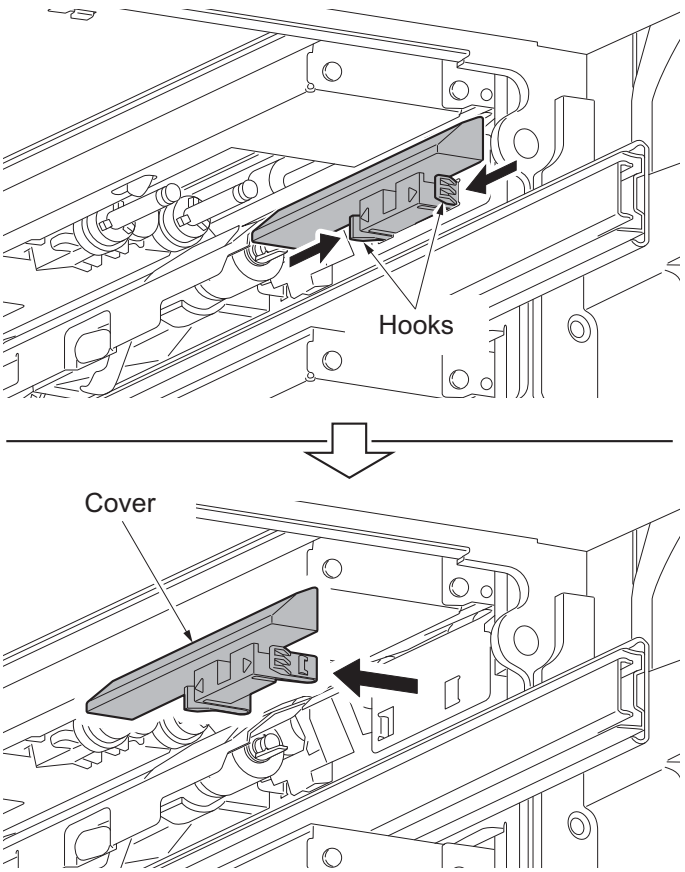

Figure 1-5-32

7. Remove the hook and remove the separation roller from the axle.
*: Confirm that the nipping between the feed roller and separation roller is released.
8. Clean or replace the forwarding pulley, paper feed pulley and separation pulley.
9. Refit the forwarding pulley, paper feed pulley and separation pulley to the primary paper feed unit.
*: Make sure that the collars are properly installed by checking its color.
Forwarding pulley (Collar is white.)
Paper feed pulley (Collar is white.)
Sparation pulley (Collar is black.)
10. When the forwarding pulley, paper feed pulley or separation pulley is replaced, perform maintenance mode U903 (clearing the jam counter) (see page 1-3-219).
Execute Maintenance Counter - Cassette - Counter Clear of U251 (Maintenance counter limits/clear) (see page 1-3-152).

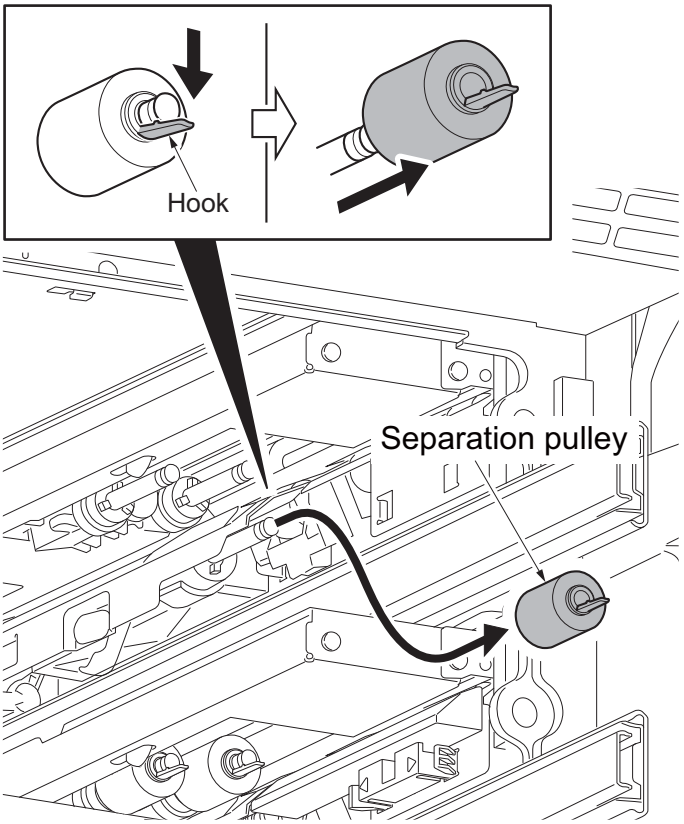

Figure 1-5-33

(4) Detaching and refitting the MP tray paper feed unit

Procedure

1. Pull the paper conveying unit out.
2. Open the MP tray.
3. Remove four screws.

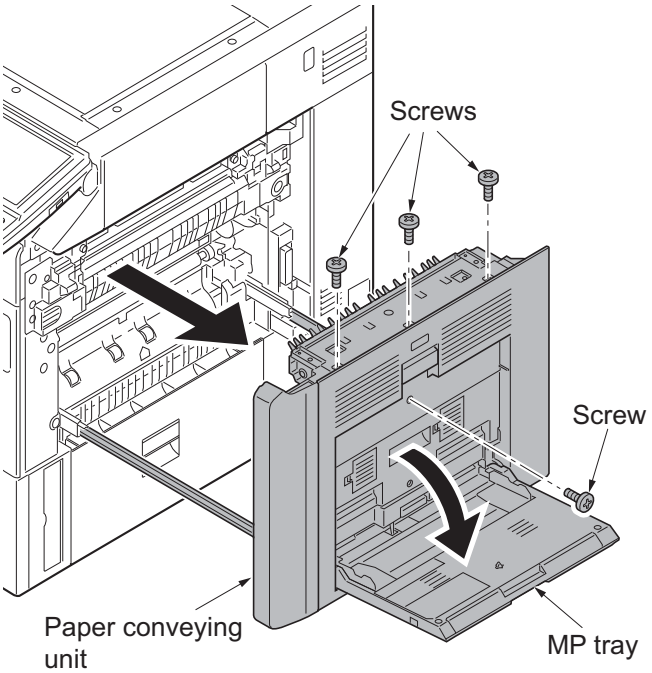

Figure 1-5-34

4. Unhook eight hooks and then remove the right cover and DU cover assembly.

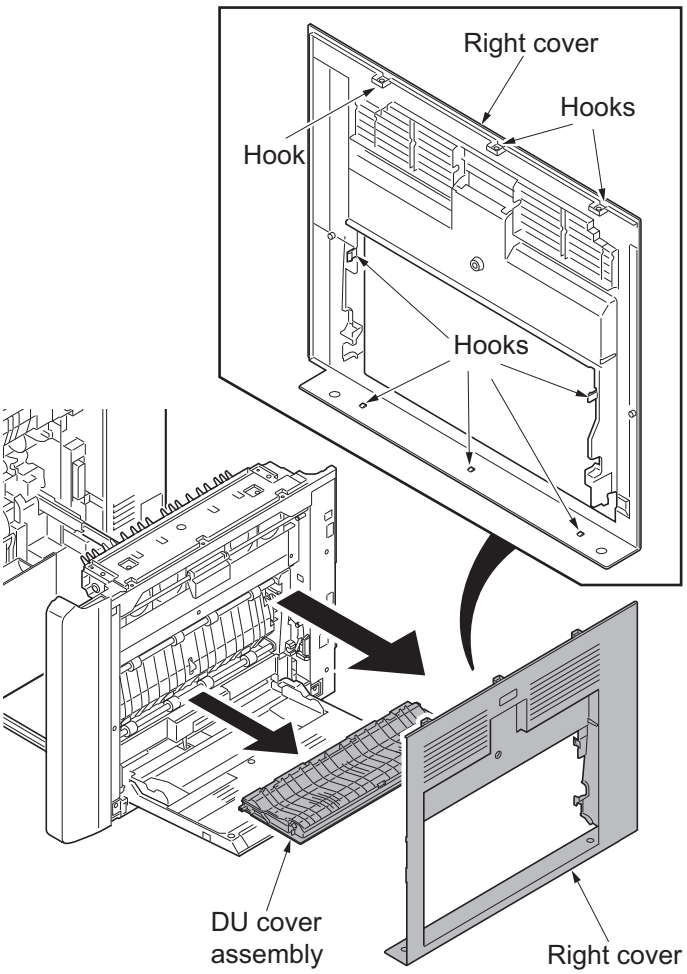

Figure 1-5-35

5. Remove two connectors.
6. Release the wire saddle.
7. Remove the wire saddle.

*: To refit the wire saddle, be sure to fit in the positioning hole that was previously used.

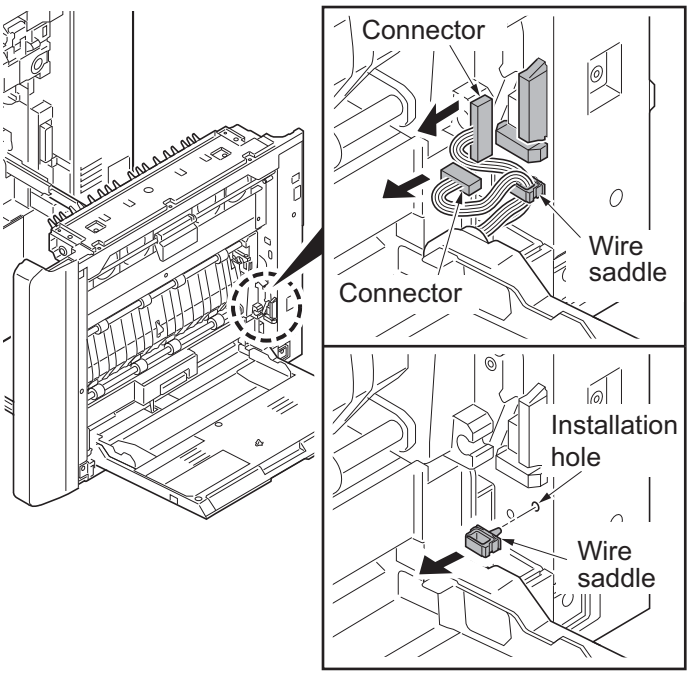

Figure 1-5-36

8. Remove the MP tray.

*: When refitting the MP tray, insert it in the MP tray paper feed unit side by turning the lift arm.

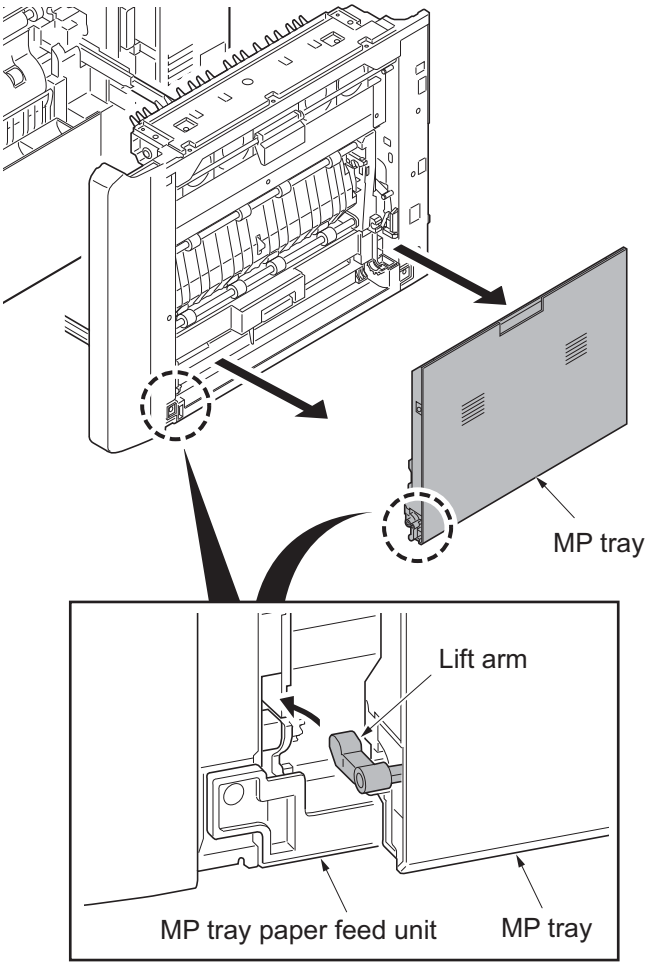

Figure 1-5-37

9. Remove two screws.
10. Remove the MP tray paper feed unit.

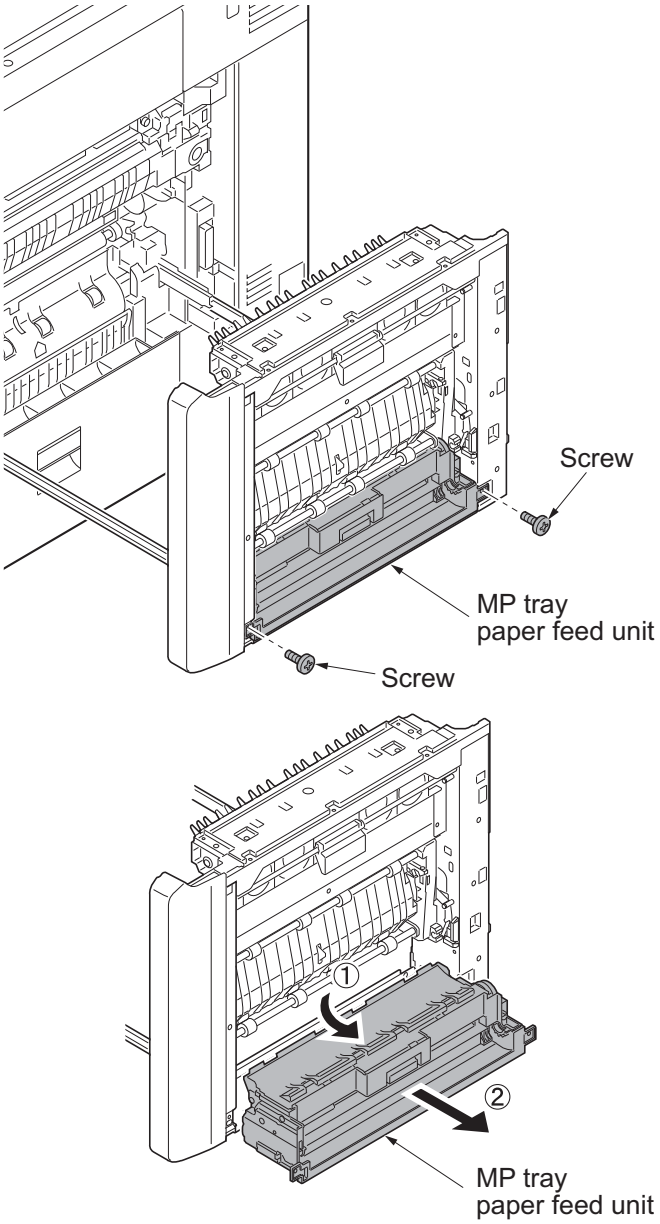

Figure 1-5-38

(5) Detaching and refitting the MP forwarding pulley, MP paper feed pulley and MP separation pulley

Procedure

1. Remove the MP tray paper feed unit (see page 1-5-21).

Detaching forwarding pulley and paper feed pulley

2. Unhook three hooks and then remove the Du lower guide.

*: Remove the DU lower guide easy by bending the top base that the hook is hooking because the hook of the DU lower guide lacks flexibility.

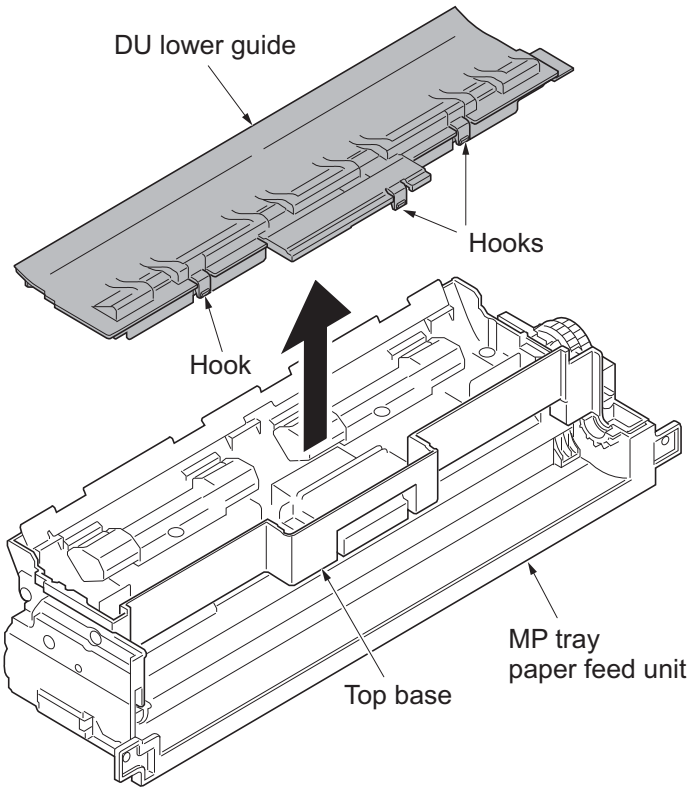

Figure 1-5-39

3. Remove the stop ring A and then slide the driving joint.
4. Slide the bush A.
5. Remove the stop ring B and then remove the bush B.

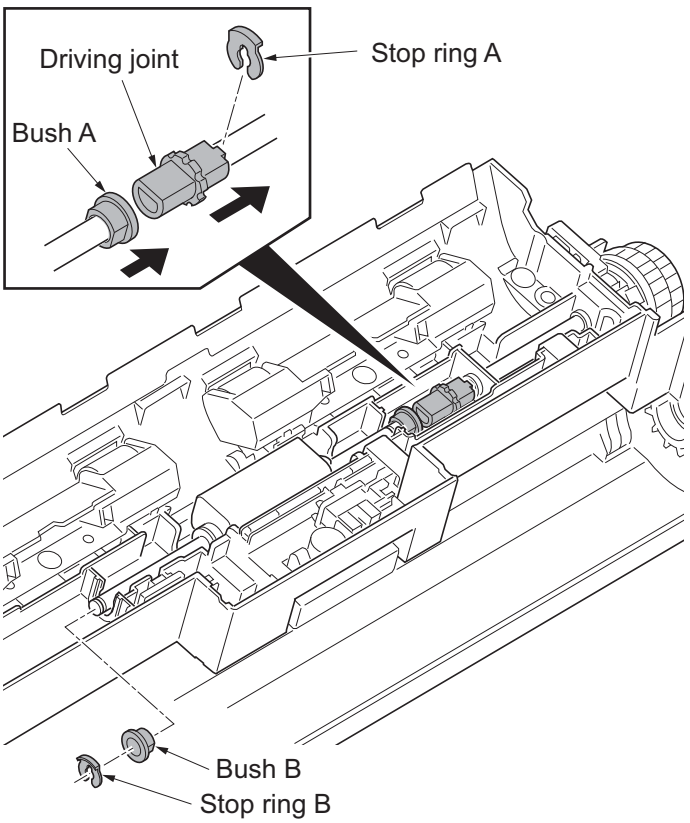

Figure 1-5-40

6. Unhook the hook of the feed holder assembly.
7. Remove the spring and the feed holder assembly from the top base.

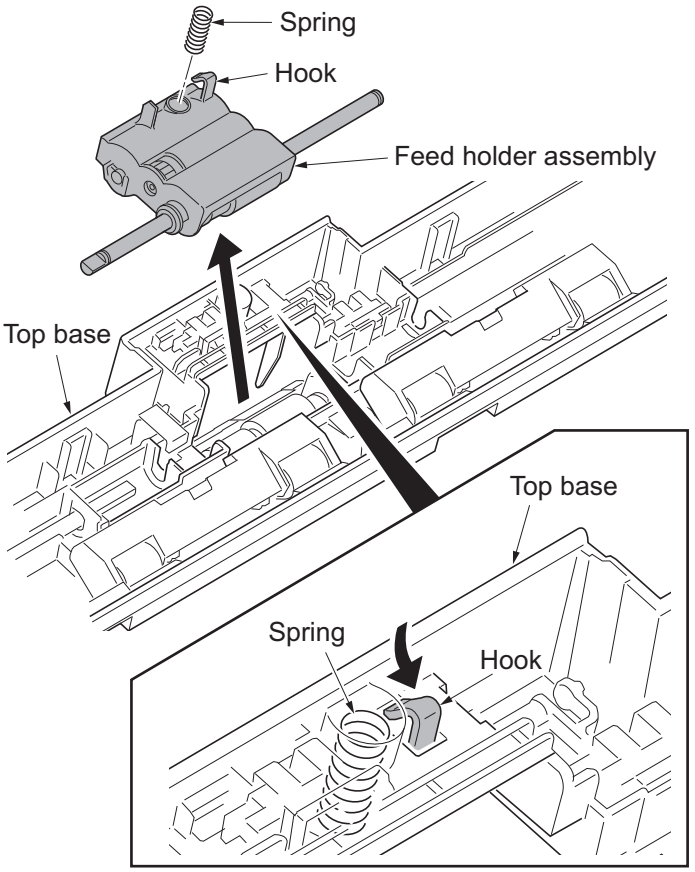

Figure 1-5-41

8. Remove two stop rings.
9. Pull the feed MPF shaft out.
10. Remove two bushes, one way gear Z30R and MP paper feed pulley.

*: To refit the one-way gear Z30R, mount the gear in the correct direction as shown.

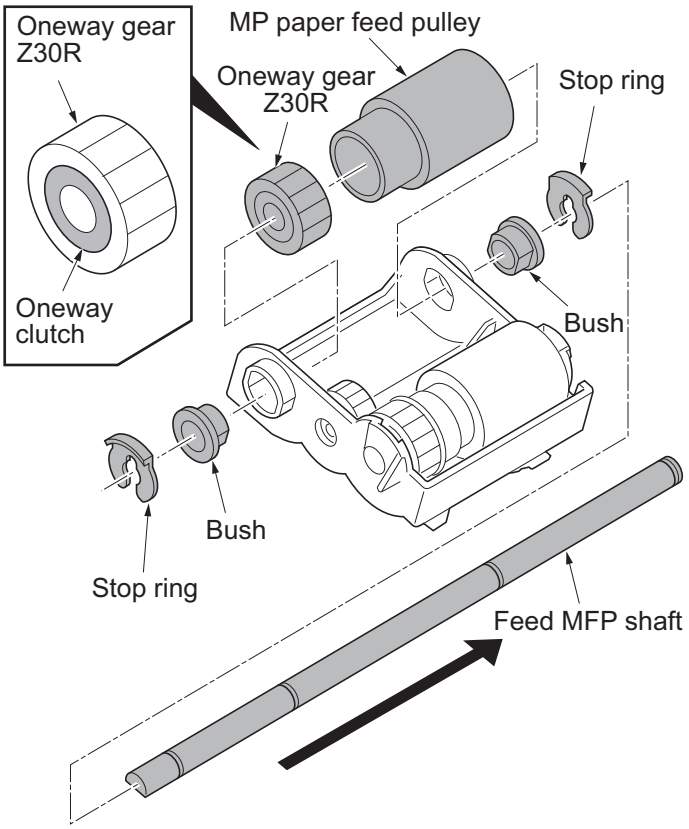

Figure 1-5-42

11. Remove the pickup MPF shaft from the axis holes of feed MPF holder.
12. Pull the pickup gear Z30R and MP forwarding pulley out from the pickup MFP shaft.

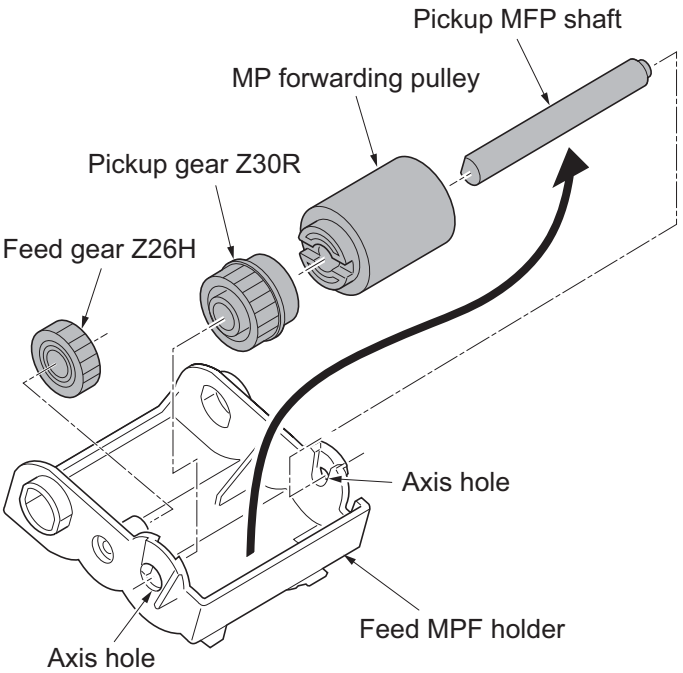

Figure 1-5-43

Detaching the MP separation pulley

13. Unhook two hooks and then remove the middle guide.

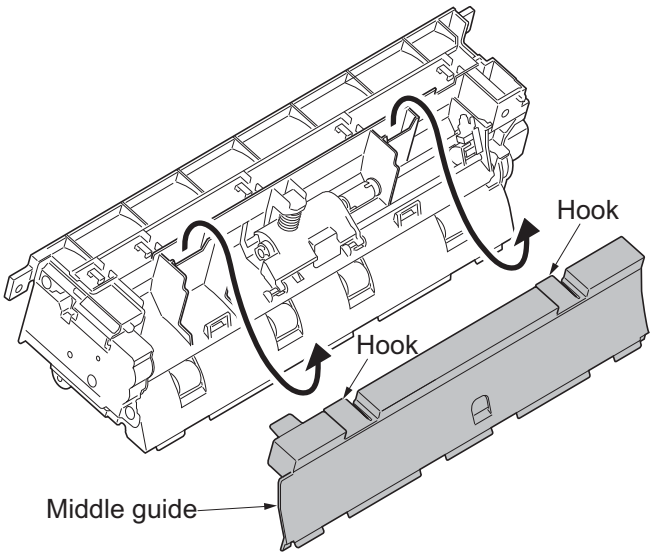

Figure 1-5-44

14. Remove the spring.
15. Release the uniting of joint by sliding the retard holder assembly.

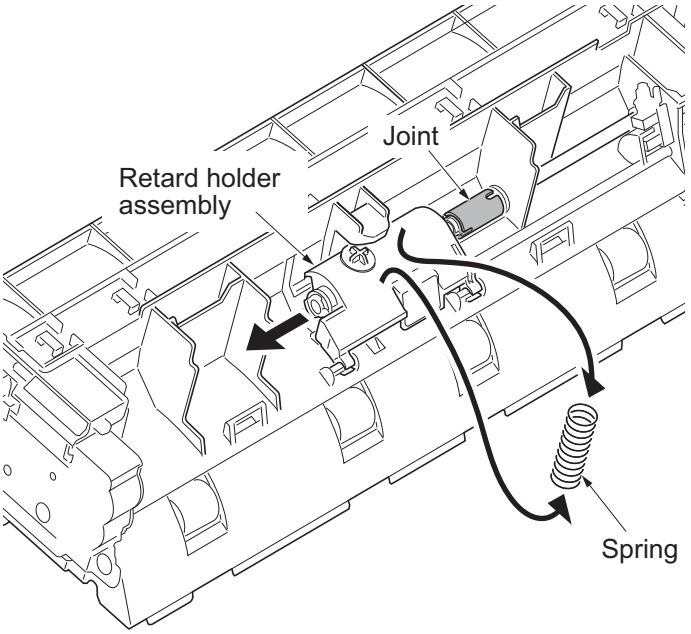

Figure 1-5-45

16. Remove the retard holder assembly by turning it as shown.

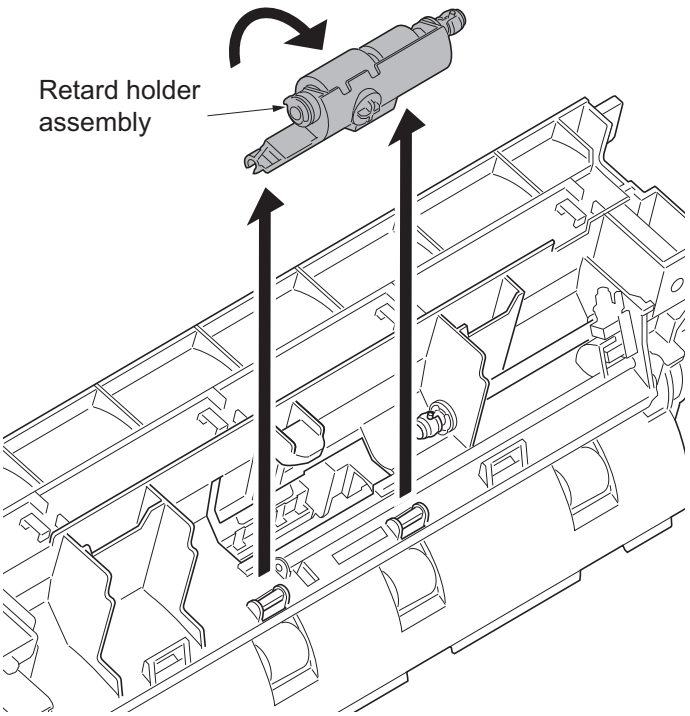

Figure 1-5-46

17. Remove two stop rings.
18. Remove two bushes.
19. Pull the retard MPF shaft out and then remove the torque limiter and the MP separation pulley.
20. Clean or replace the MP forwarding pulley, MP paper feed pulley and MP separation pulley.
21. Refit the MP forwarding pulley, MP paper feed pulley and MP separation pulley to the MP tray paper feed unit.
22. When the MP forwarding pulley, MP paper feed pulley or MP separation pulley is replaced, perform maintenance mode U903 (clearing the jam counter) (see page 1-3-219).

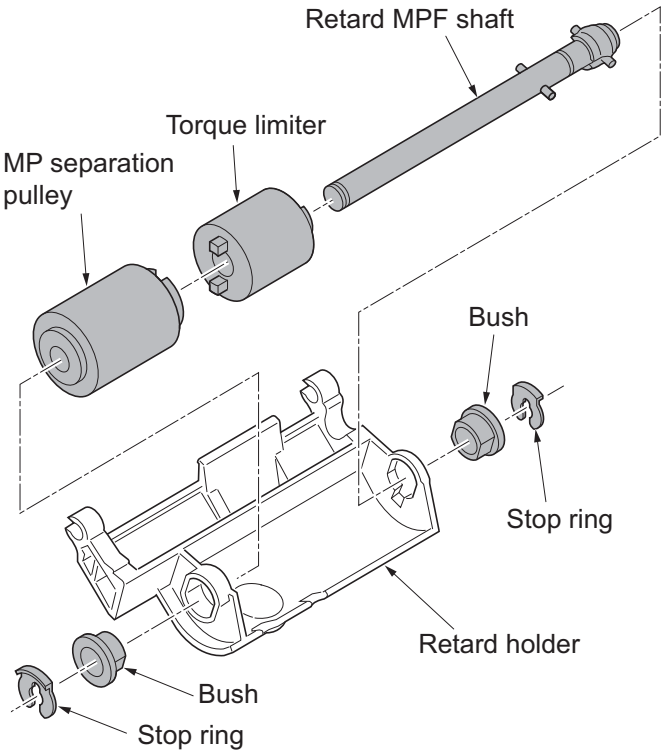

Figure 1-5-47

1-5-4 Optical section

(1) Detaching and refitting the exposure lamp

Notes on handling the LED mount assembly
Do not touch the diffusion seat and the light guiding plate.
Use air blow when you clean the diffusion seat, the light guiding plate, and reflector.
Do not clean it using a cleaning cloth that adheres the fiber easily.

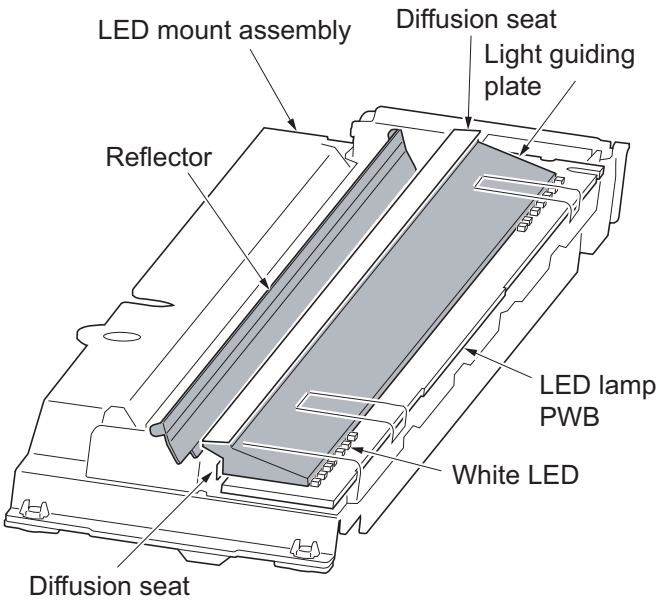

Figure 1-5-48

Procedure

1. Remove the original cover or the document processor.
2. Remove the the staple holder. Remove the screw and then remove the staple cover (see page 1-2-76).
3. Remove the hook and remove the upper cover B (see page 1-2-77).
4. Remove two pins and then remove the ISU front cover.
5. Remove two screws and then remove the ISU right cover.

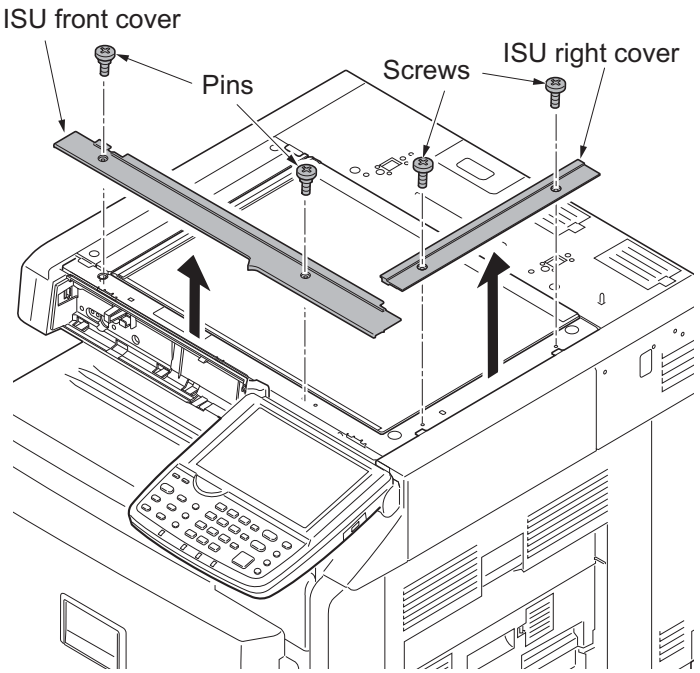

Figure 1-5-49

6. Remove the left upper cover (see page 1-5-4).
7. Remove the right upper cover (see page 1-5-9).
8. Remove two screws and then remove the ISU rear cover.

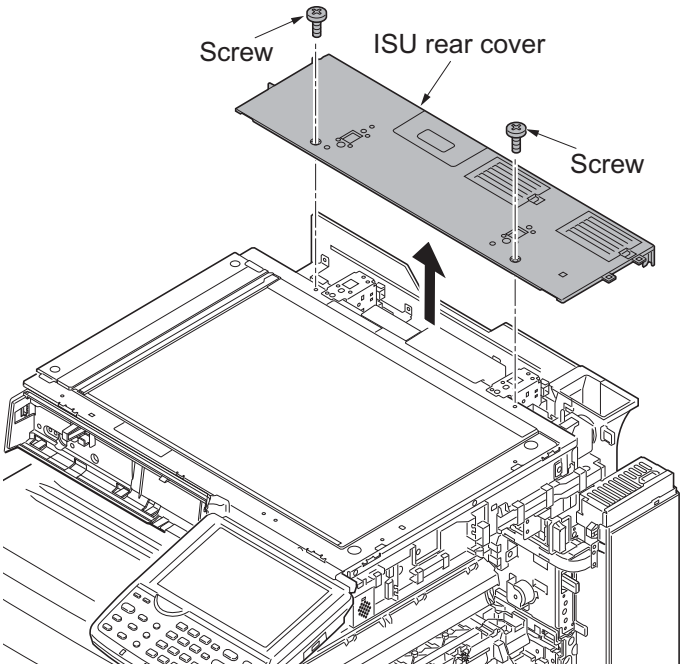

Figure 1-5-50

9. Remove the platen.
10. Peels two films off.

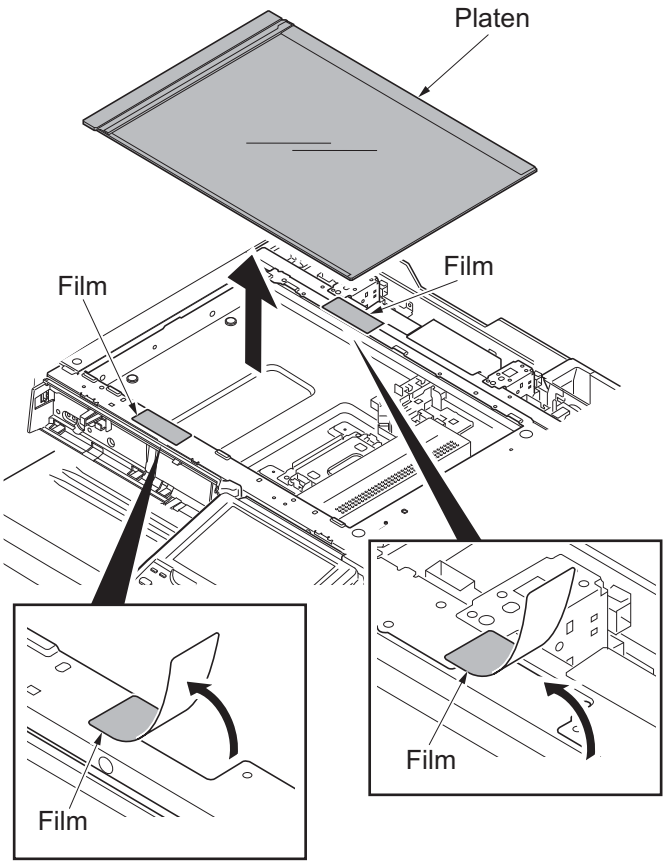

Figure 1-5-51

11. Move the LED mount assembly to the cutting lack part.
12. Unhook the hook and remove the FFC cover from LED mount assembly.
13. Remove the FFC from the FFC connector.
14. Unhook two hooks and remove the FFC guide from the LED mount assembly.

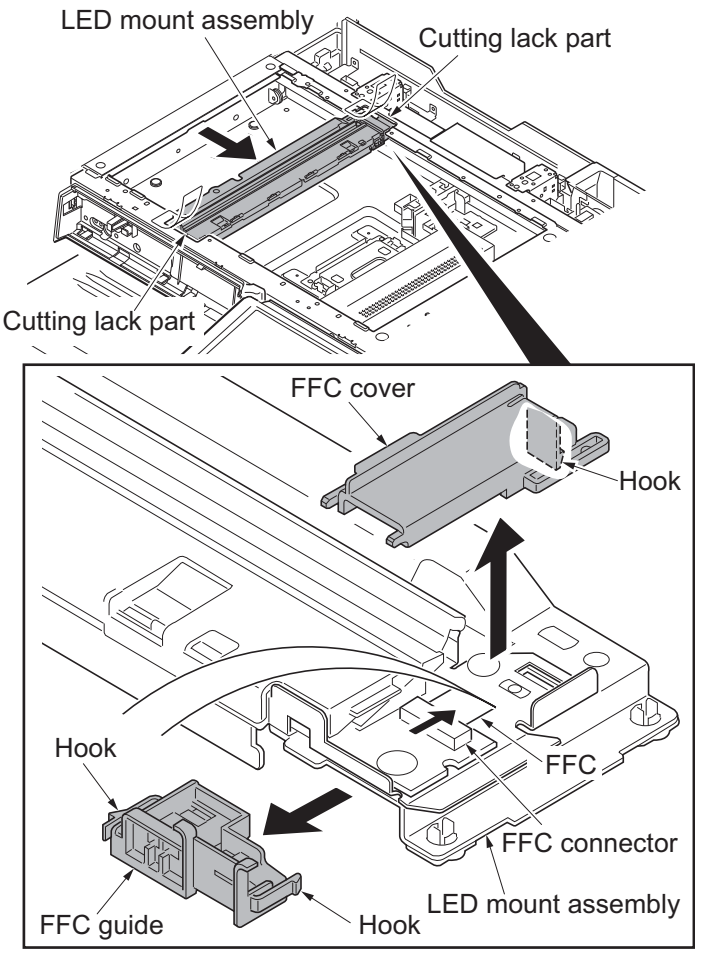

Figure 1-5-52

15. Remove two screws and then remove the LED mount assembly.
16. Check or replace the LED mount assembly and refit all the removed parts.

*: When cleaning the reflector, the light guiding plate and the diffusion sheet of the LED mount assembly, clean it by air blow. Not to leave the hair dust.

17. When the LED mount assembly is replaced, perform maintenance mode U411 (Adjusting the scanner automatically) (see page 1-3-173).

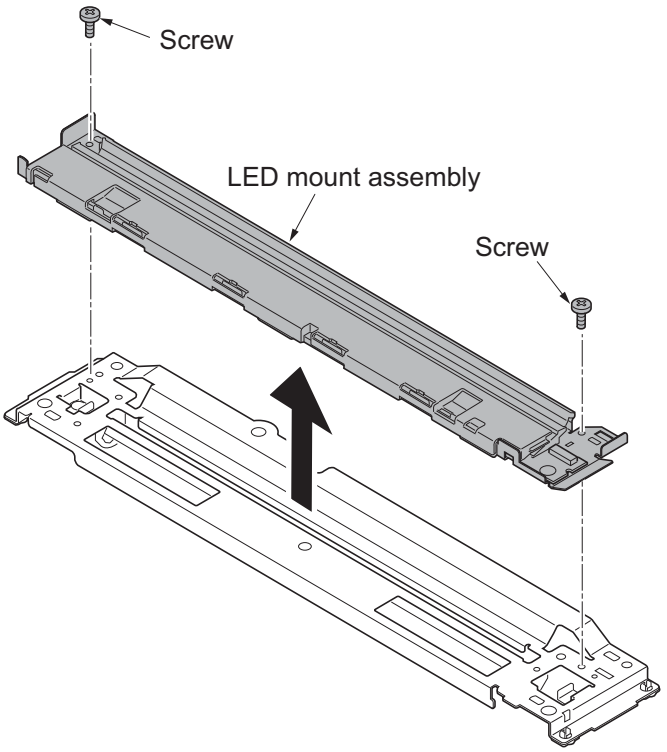

Figure 1-5-53

(2) Detaching and refitting the scanner wires

NOTE
When fitting the wires, be sure to use those specified below.
Machine front: (P/N: 302H717381), gray
Machine rear: (P/N: 302H717391), black

Fitting requires the following tools
Two frame securing tools (P/N 302FZ17100)
Two scanner wire stoppers (P/N 3596811)

Procedure

1. Remove the exposure lamp (see page 1-5-29).
2. Remove each screw and then remove front and rear wire holder plates from mirror 1 frame.
3. Remove the mirror 1 frame.

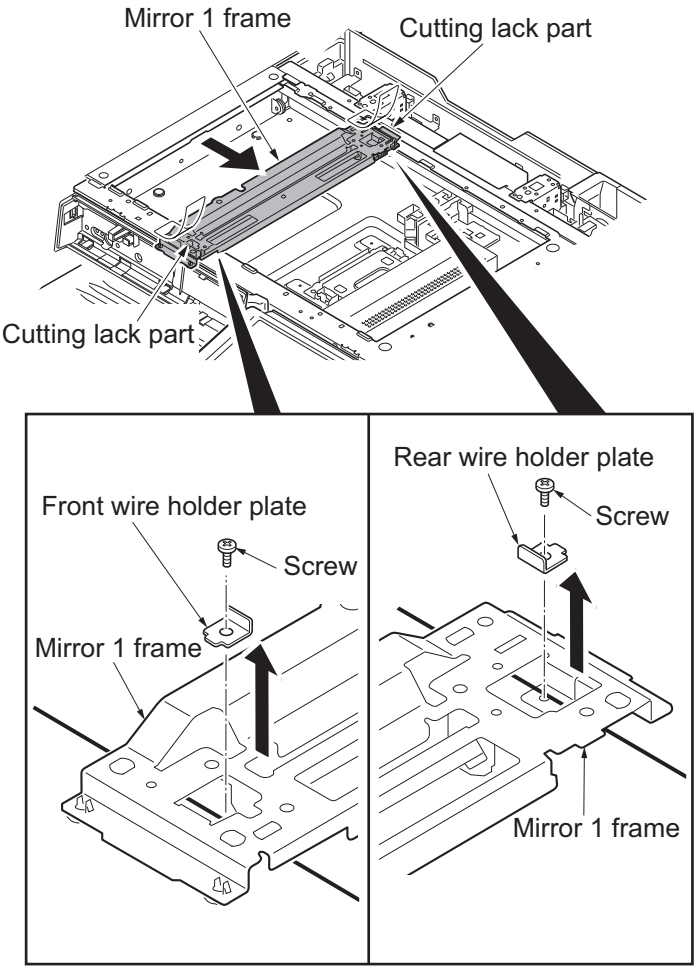

Figure 1-5-54

4. Remove the round terminals from the scanner wire springs on scanner unit left side.
5. Remove the scanner wire.

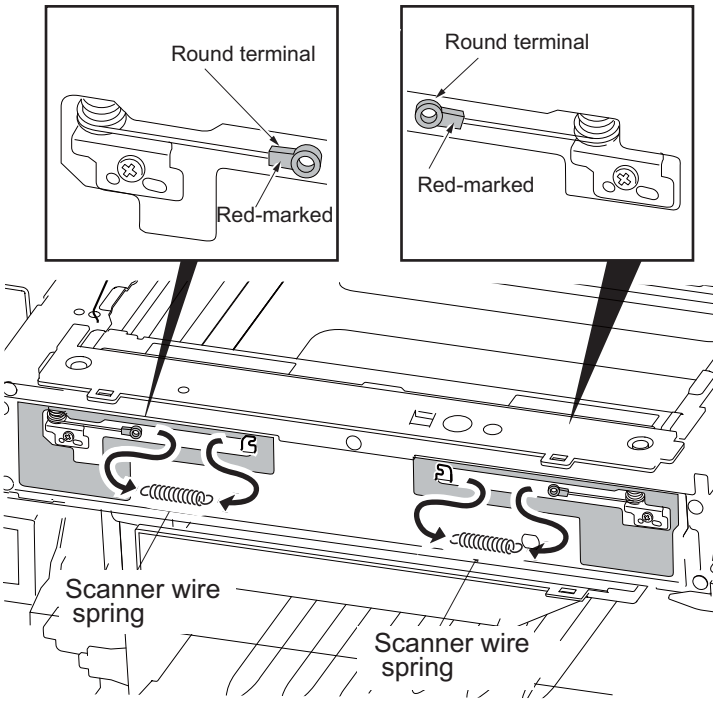

Figure 1-5-55

Fitting the scanner wires

6. Remove two screws each from scanner wire drum. ..... (1)
7. Insert the locating ball on the scanner wire into the hole in the scanner wire drum..... (2)
8. Wind the scanner wires three turns inward and five turns outward.
   With the locating ball as the reference point,
   wind the shorter end of each of the wires outward. ..... (3)(4)
9. Secure the scanner wires using the scanner wire stoppers..... (5)

10. Move the mirror 2 frame as shown in the figure and insert two frame securing tools into the positioning holes at the front and rear of the machine center to fix the mirror 2 frame in position.

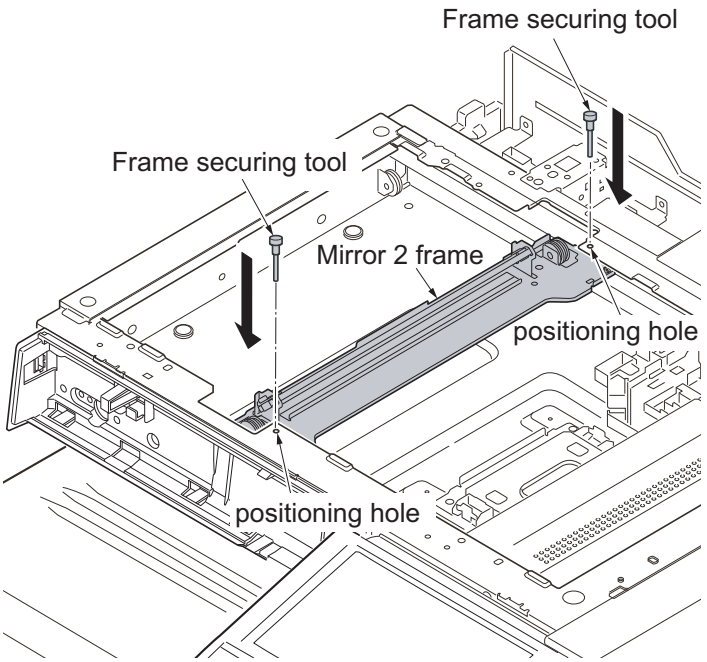

Figure 1-5-56

11. Wind the inner scanner wires around the grooves in the pulleys at the right of the scanner unit from below to above. (6)
12. Wind the outer scanner wires around the outside grooves in the pulleys of the mirror frame 2 from above to below. (7)
    *: Align the scanner wires along the outside of the positioning pins.
13. Hook the round terminals to the catches inside the scanner unit. (8)
14. Wind the inner scanner wires around the grooves in the pulleys at the left of the scanner unit from below to above. (9)
    *: Align the scanner wires along the lower side of the mirror frame 2.
15. Wind the scanner wires around the inside grooves in the pulleys of the mirror frame 2 from below to above. (10)
16. Wind the scanner wires around the grooves in the pulleys at the left of the scanner unit. (11)
17. Hook the round terminals to the scanner wire springs. (12)
18. Apply the procedures 11 through 17 to another scanner wires.

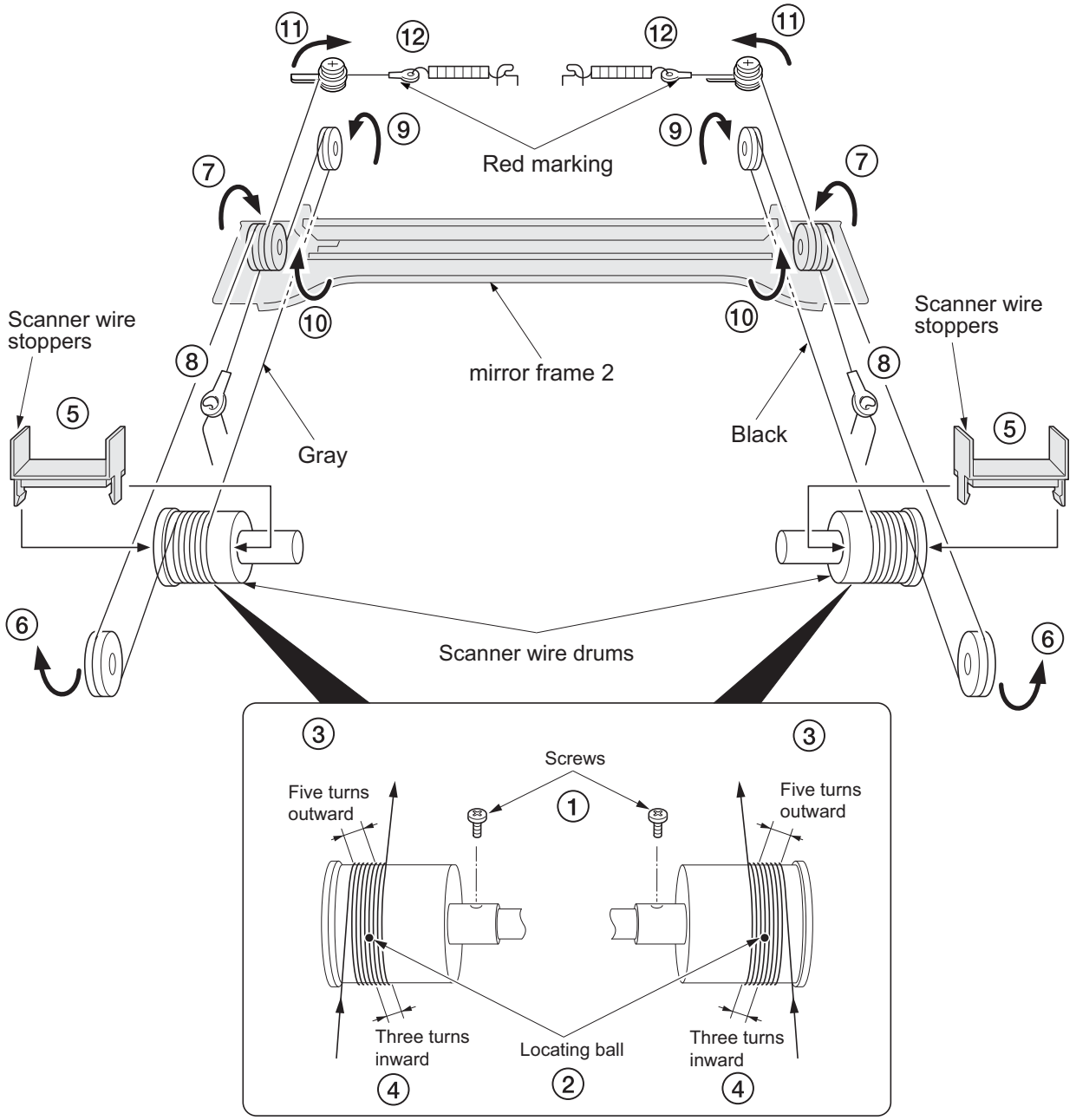

Figure 1-5-57

19. Refit the scanner wire drum with two screws.
20. Remove the two scanner wire stoppers and frame securing tools.
21. Focusing on the locating ball of the wire drum, align the scanner wires to the inside.
22. Move the mirror 2 frame from side to side to correctly locate the wires in position.
23. Refit the mirror 1 frame.
24. Move the mirror 1 and 2 frames to the machine left, and insert the two frame securing tools into the positioning holes at the front and rear of the scanner unit to secure the frames in position.
25. Hold the wires and fix each front and rear wire holder plate to mirror 1 frame with the screw.
26. Remove the two frame securing tools.
27. Refit the exposure lamp.

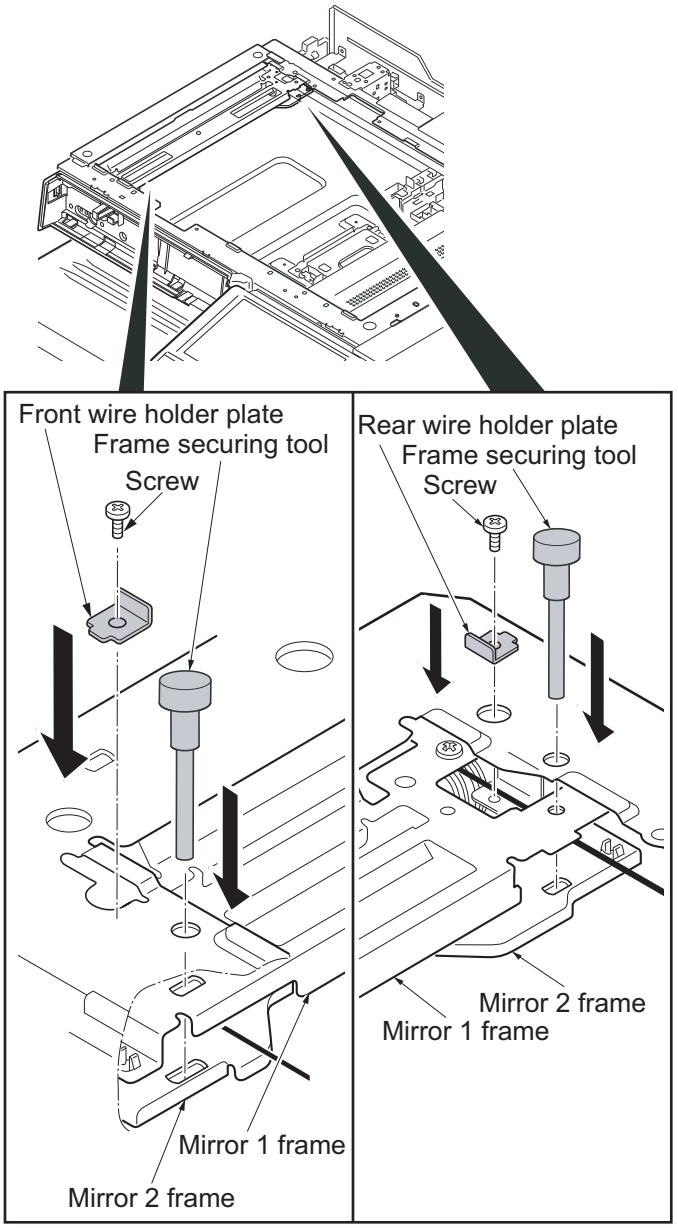

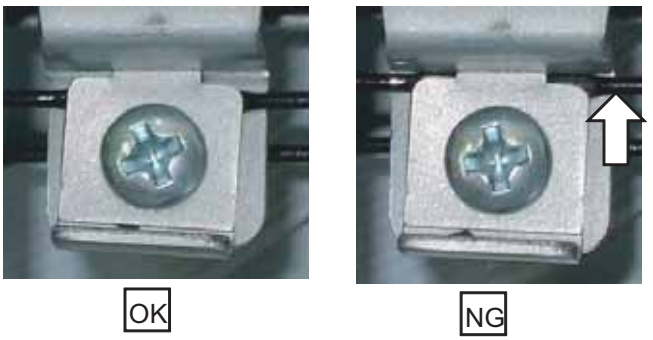

Figure 1-5-58

(3) Detaching and refitting the ISU

Procedure

Detaching the ISU

1. Worn the electrostatic prevention band for the destruction prevention of the CCD board by static electricity.
2. Remove the Contact glass (see page 1-5-29).
3. Remove six screws and then remove the lens cover.

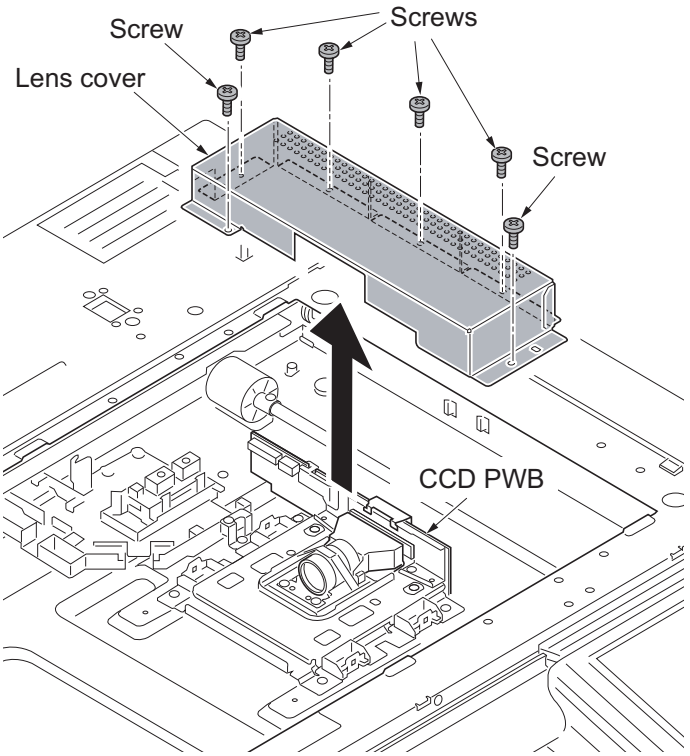

Figure 1-5-59

4. Remove the connector.
5. Remove the FFC from the FFC connector with a lock.

*: When removing the FFC from the FFC connector with a lock, remove it after release the lock by lifting the lock lever up (see page 1-5-73).

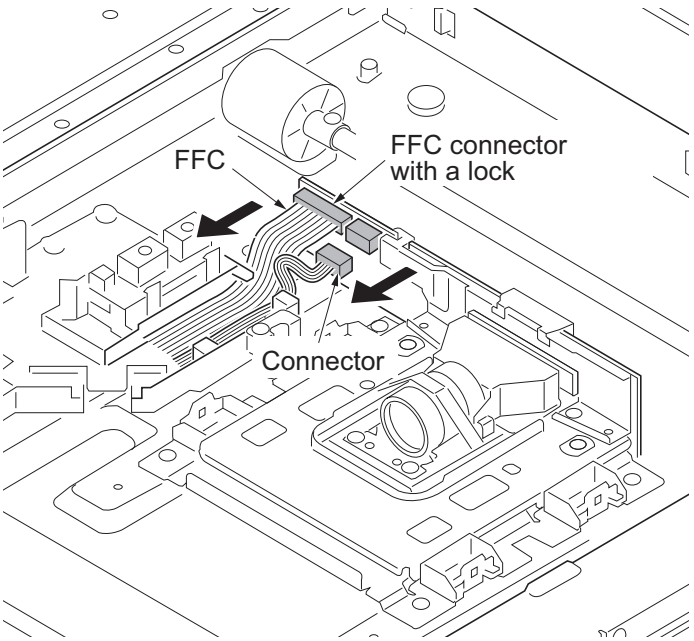

Figure 1-5-60

6. Remove four screws and then remove the ISU.

*: The ISU's are different depending on 30ppm model/35ppm model and 45ppm model/55ppm model.

[45ppm/55ppm]

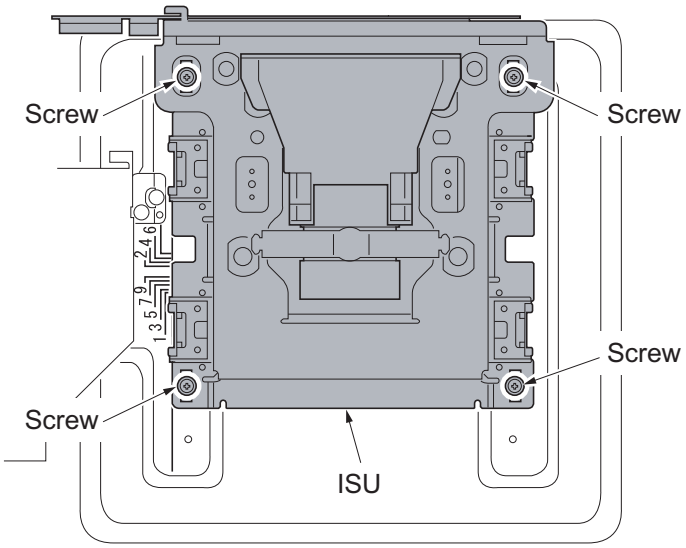

[30ppm/35ppm]

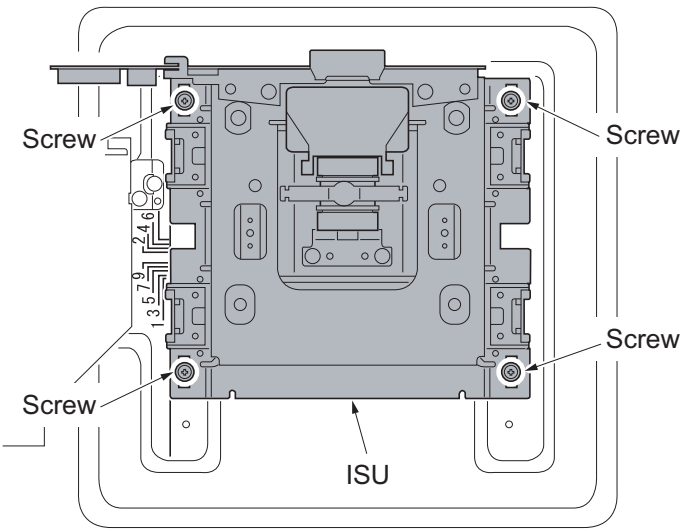

Figure 1-5-61

Refitting the ISU

1. Install the FFT.

*: The FFT should be inserted while holding the position (A) shown in the illustration (A).
Do not apply a pressure to the focus adjuster.

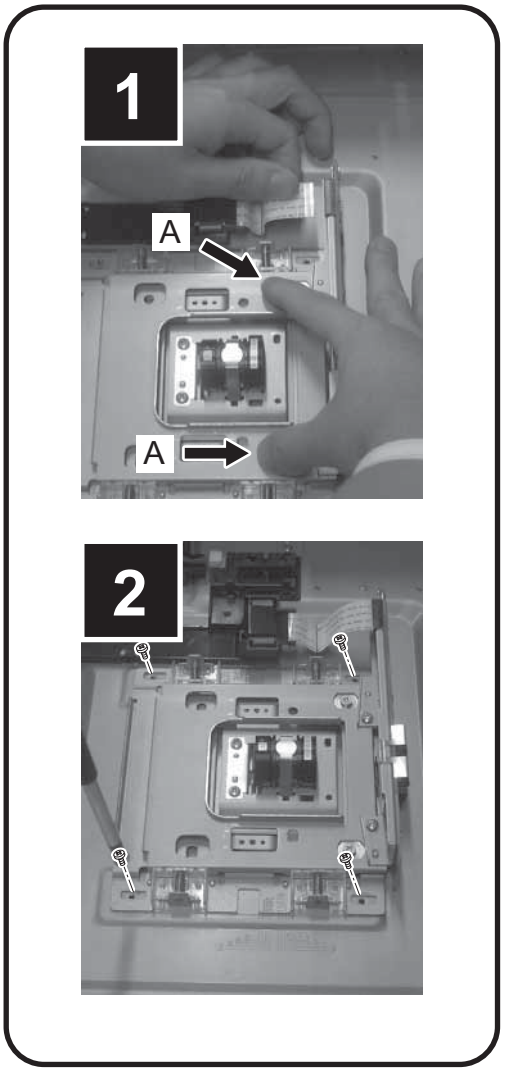

Figure 1-5-62

2. Decide the fix position of ISU by the following.
   The right and left of machine:
   Verify the number prefixed by a (a) mark.
   Match the line (c) of ISU to the positioning line (b) of same number on frame side.
   The rear and front of machine:
   Match the edge (e) of ISU to the positioning line (d) on frame side.
3. Fix the ISU as before with four screws.

[45ppm/55ppm]

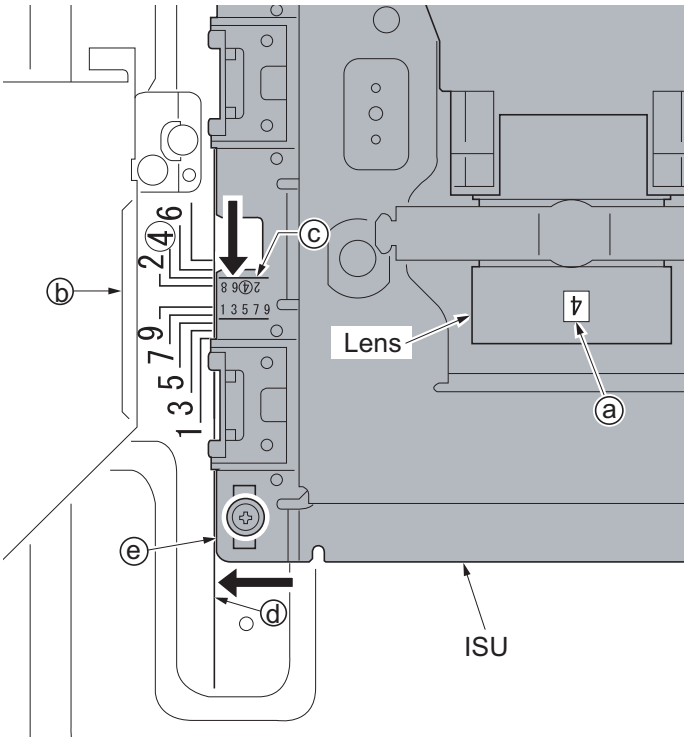

[30ppm/35ppm]

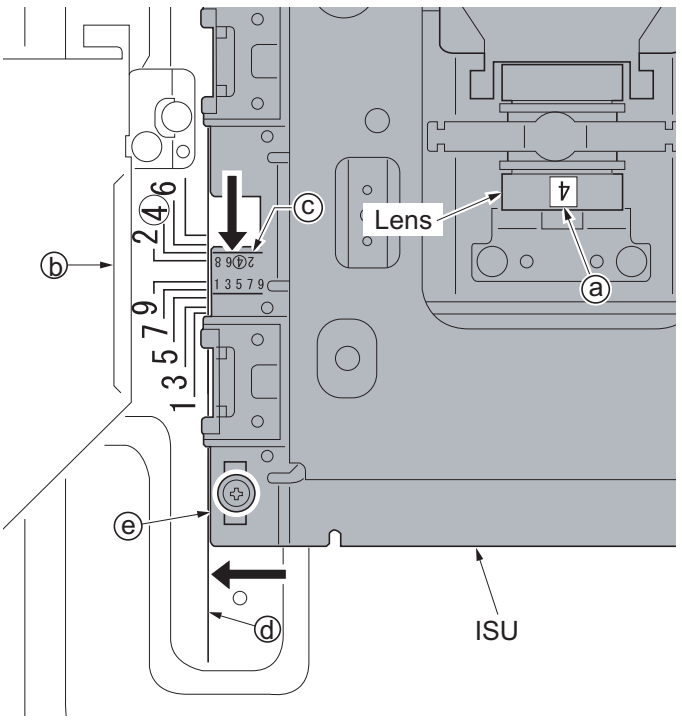

Figure 1-5-63

4. Check the image
   After replacing the CCD unit, check the copy image. According to the condition, execute the procedures below.
   1. In case of no problem on the image, go to “9.Image Adjustment”
   2. In case a part of the image is whitish from the leading edge or the background image appears like the illustration “a”, go to “5. The CCD unit Height Adjustment 1” .
   3. In case white vertical lines appear on the image like the illustration “b”, go to “7. The CCD unit Height Adjustment 2”.

   *: The CCD unit height adjustment is necessary for above 2 and 3 because an optical axis shifts and the light path is not secured.

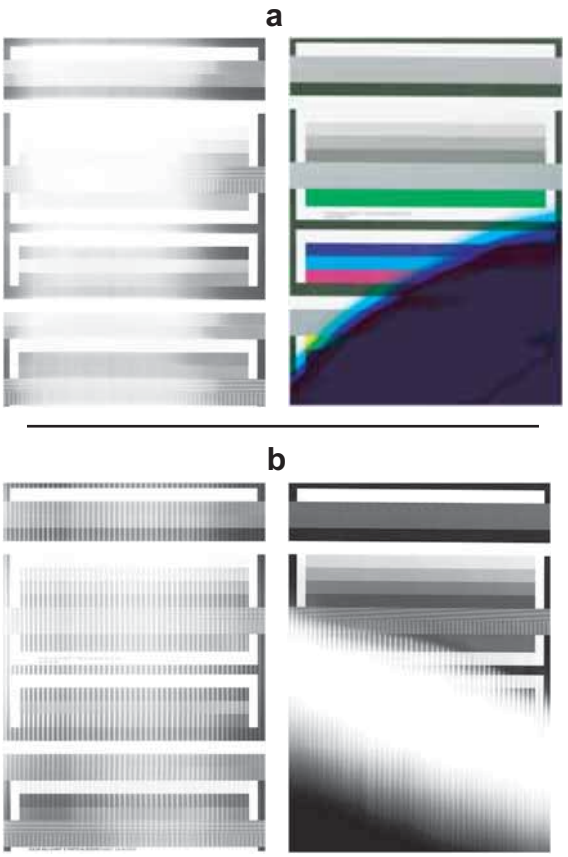

Figure 1-5-64

5. The CCD unit Height Adjustment 1

In case a part of the image is whitish from the leading edge or the background image appears like the illustration “a” .

The replacement ISU comes complete with a large spacer (B) and a small spacer (C).

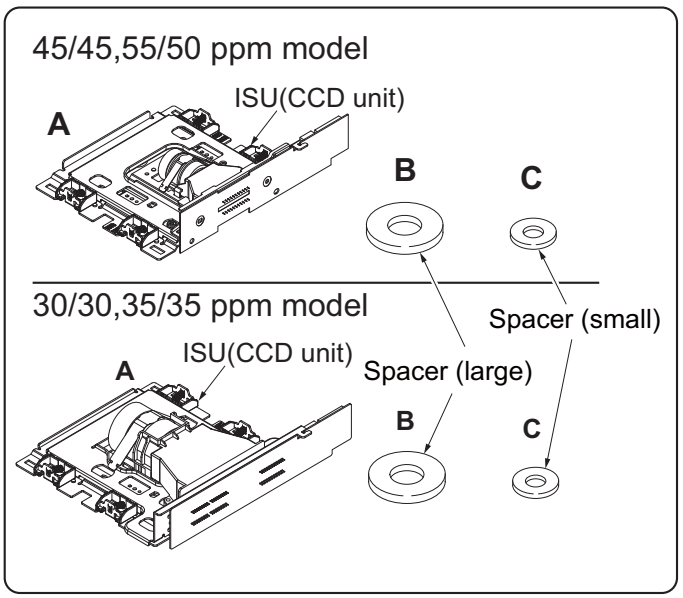

Figure 1-5-65

1. **For 45/45, 55/50 ppm model**
   Set the spacer (large) (B) into the inside screw holes at the CCD sensor side.
   For 30/30, 35/35 ppm model
   Set the spacer (large) (B) into the out-side screw holes at the CCD sensor side.
2. Check the image.

In case of no problem on the image, go to "9. Image Adjustment".
In case of the problem on the image, go to "6. Re-adjustment 1".

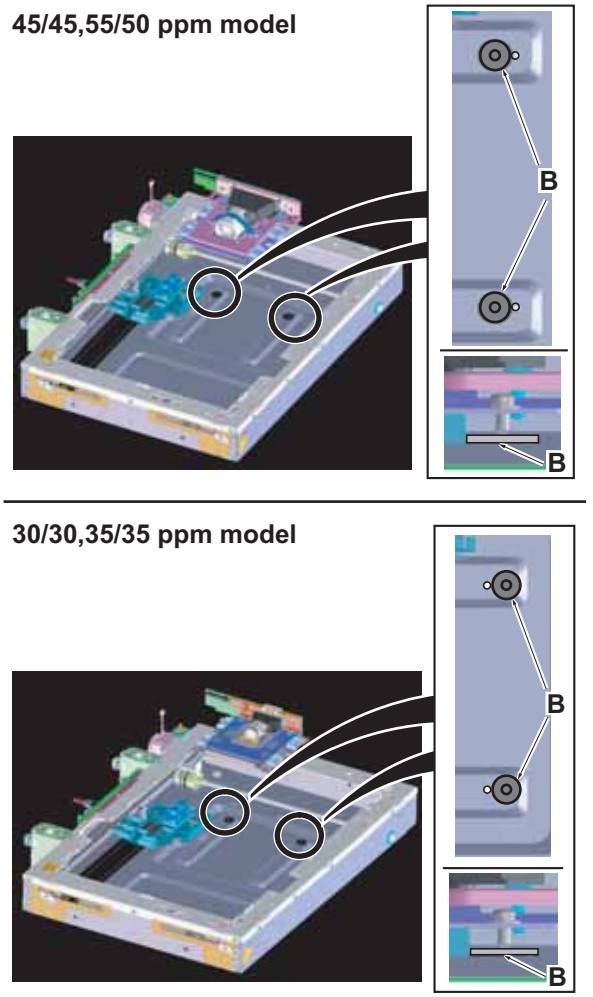

Figure 1-5-66

6. Re-adjustment 1
   1. In case the whitish or background image still appears.
      c: Insert the additional spacer (small) (C)
      In case the white vertical lines appear.
      d: Remove the spacer (large) (B) and insert the
      spacer (small) (C).
   2. Check the image and go to "9. Image Adjustment".

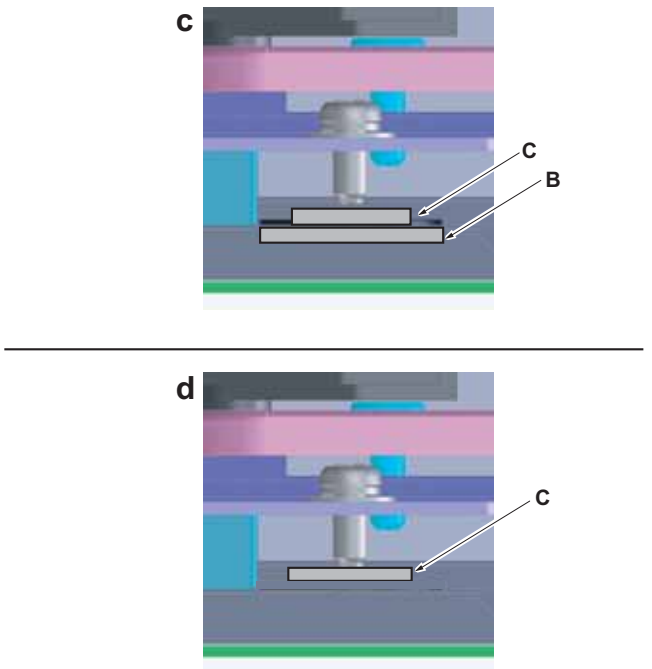

Figure 1-5-67

7. The CCD unit Height Adjustment 2

In case of white vertical lines appear like the illustration “b” on page 1.

1. For 45/45, 55/50 ppm model
   Set the spacer (large) (B) into the outside screw holes at the CCD sensor side.
   For 30/30, 35/35 ppm model
   Set the spacer (large) (B) into the inside screw holes at the CCD sensor side.
2. Check the image.

In case of no problem on the image, go to “9. Image Adjustment”.
In case of the problem on the image, go to “8. Re-adjustment 2”.

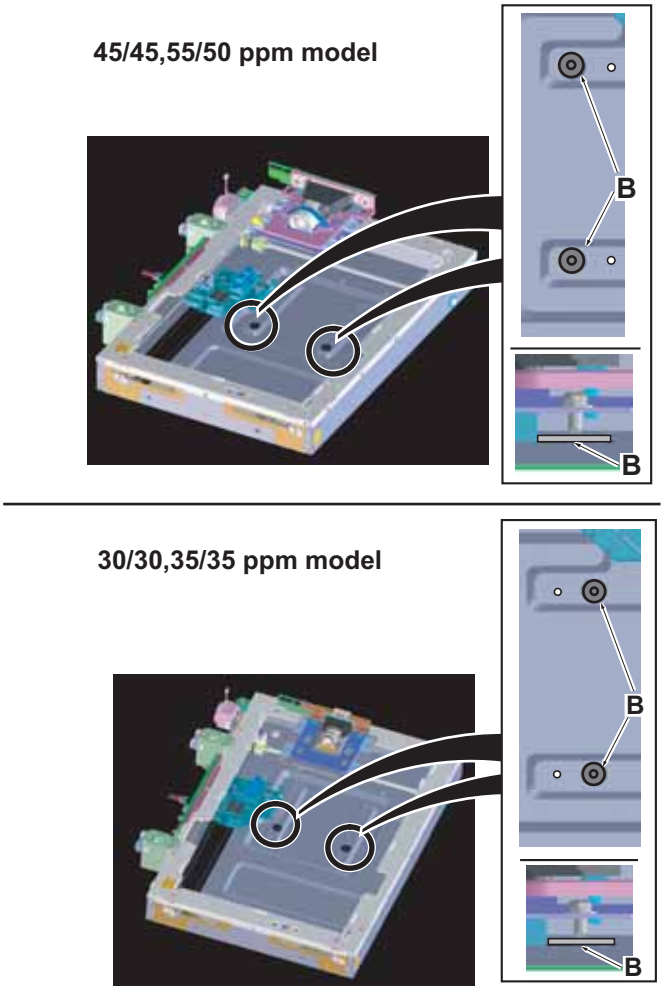

Figure 1-5-68

8. Re-adjustment 2

1. In case the white vertical lines still appear.
   c:Insert the additional spacer (small) (C)
   In case the whitish or background image appears.
   d:Remove the spacer (large) (B) and insert the spacer (small) (C).
2. Check the image and go to “9. Image Adjustment”.

9. Image Adjustment
Execute the U411 Auto Adjustment (see page 1-3-173).
1. Set a new auto adjustment chart (part no. 7505000005) on the contact glass.
2. Execute the U411- Target – Auto –Table (chart1) - ALL.
10. Refit all the removed parts.

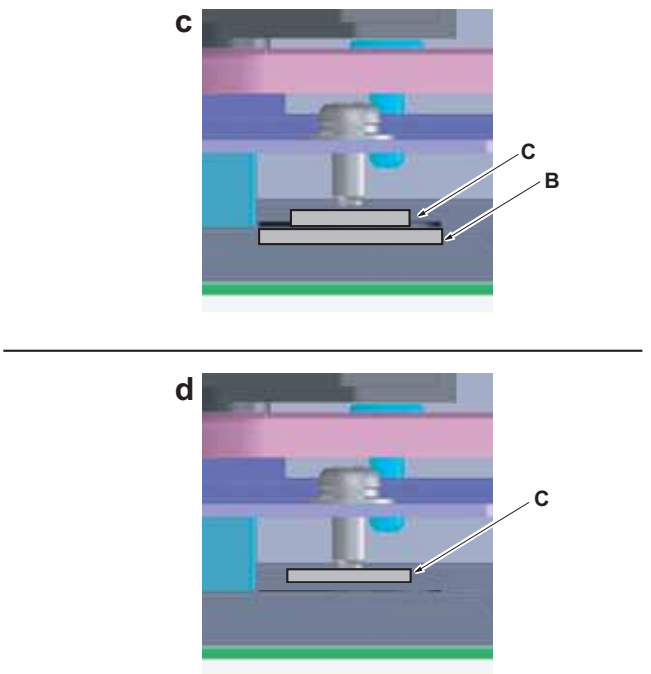

Figure 1-5-69

(4) Detaching and refitting the LSU

Procedure

1. Remove the paper conveying unit (see page 1-5-60).
2. Remove the left upper cover (see page 1-5-72).
3. Remove the toner filter.
4. Remove the left filter cover and the left filter.

*: for 45 ppm/55 ppm model only

5. Remove two transfer belt filters.
6. Remove the left cover lid.
7. Open the front cover and remove screw A.
8. Remove three screws B and then remove the left cover.

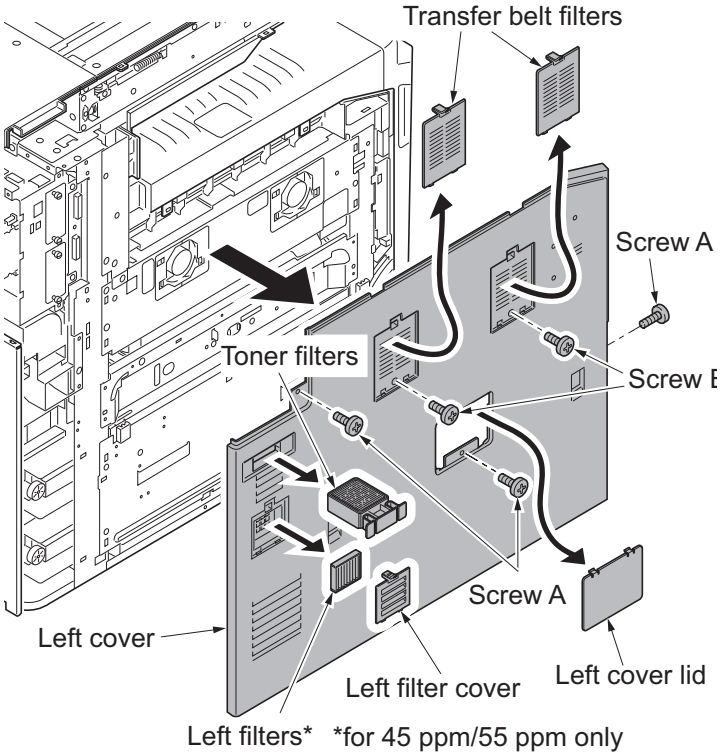

Figure 1-5-70

9. Remove four screws and then remove the LSU retainer.

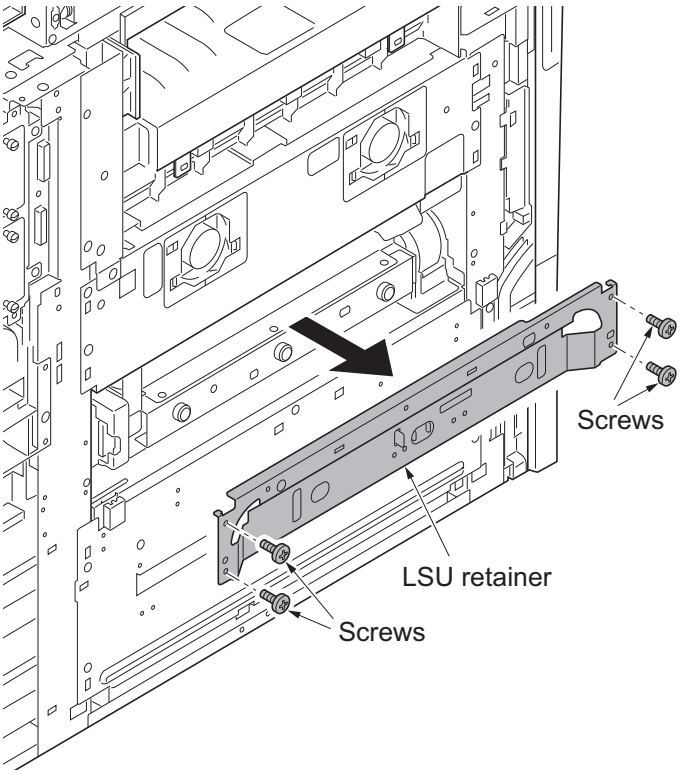

Figure 1-5-71

10. Remove two screws and then remove the middle feed plate and middle feed plate B.
11. Remove two LSU retainer pins and two springs.

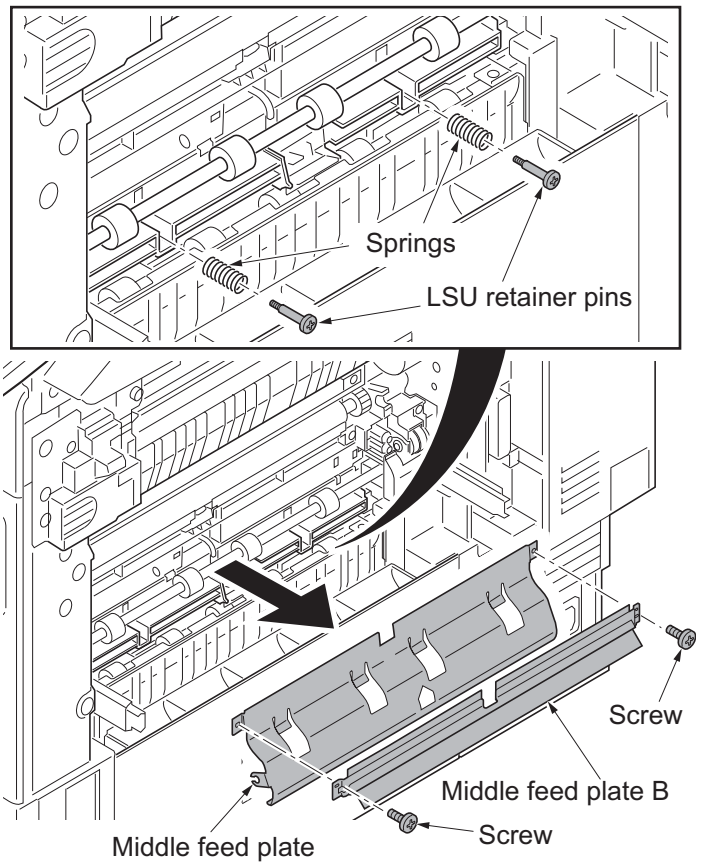

Figure 1-5-72

12. Pull the LSU out a little.
13. Remove the following connector from the LSU.
    30 ppm model:
    FFC connector with a lock: 1pcs
    Connector: 2pcs

    35 ppm model/45 ppm model/55 ppm model:
    FFC connector with a lock: 2pcs
    Connector: 2pcs

*: When remove the FFC with a connector , removing it after release the lock.

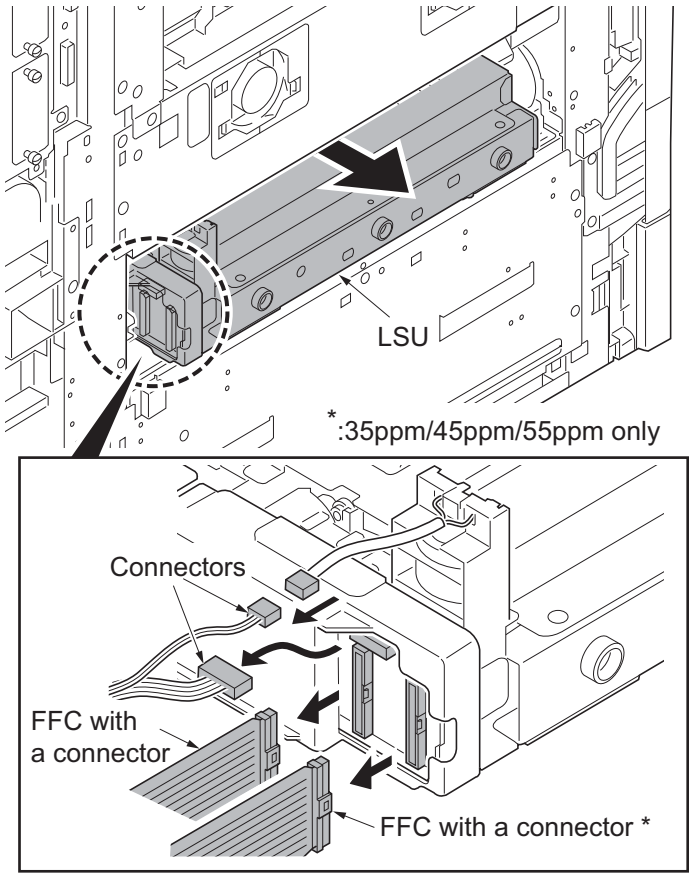

Figure 1-5-73

14. Pull the LSU out from the body of the machine.

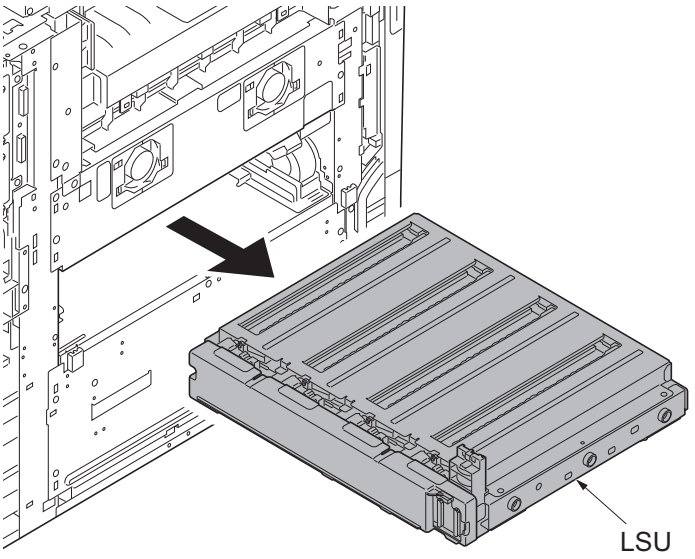

Figure 1-5-74

15. Remove seven screws and then remove the LSU mount lid.

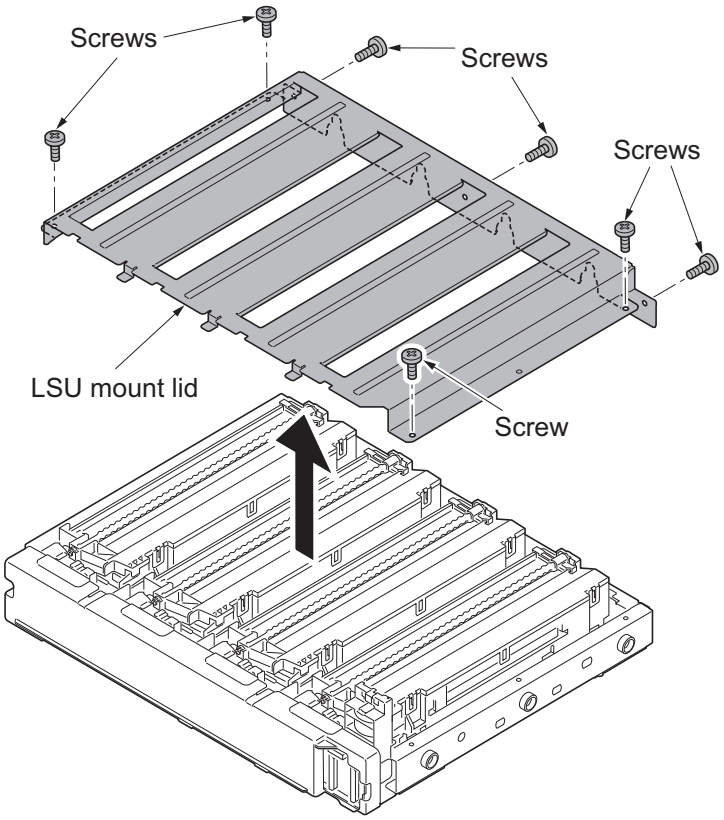

Figure 1-5-75

16. Remove the screw.
17. Unhook four hooks and then remove the LSU relay PWB cover.

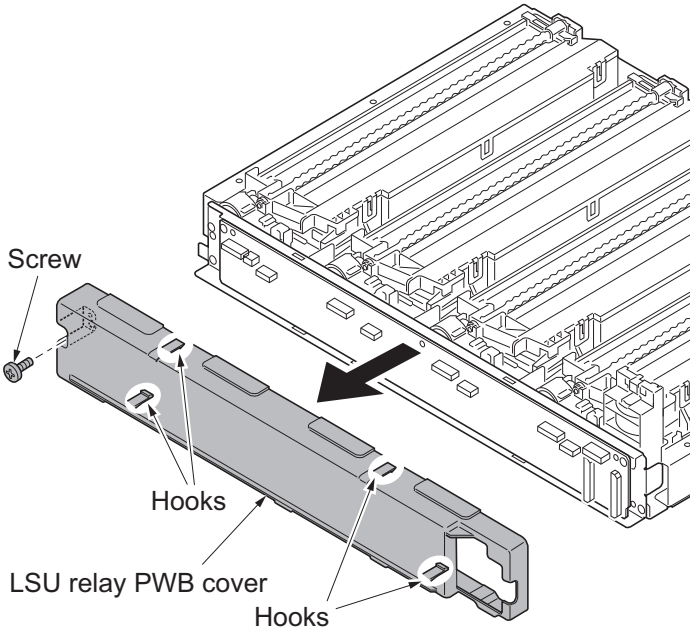

Figure 1-5-76

18. Remove all the connectors and the FFC connectors with a lock. (30ppm model has the FFC connector without a lock.)
    *: When remove the FFC from the FFC connector with a lock, removing it after release the lock by lifting the lock lever up.
19. Remove the electric wire from the electric wire support portion.
20. Remove the FFC from the FFC support potion.

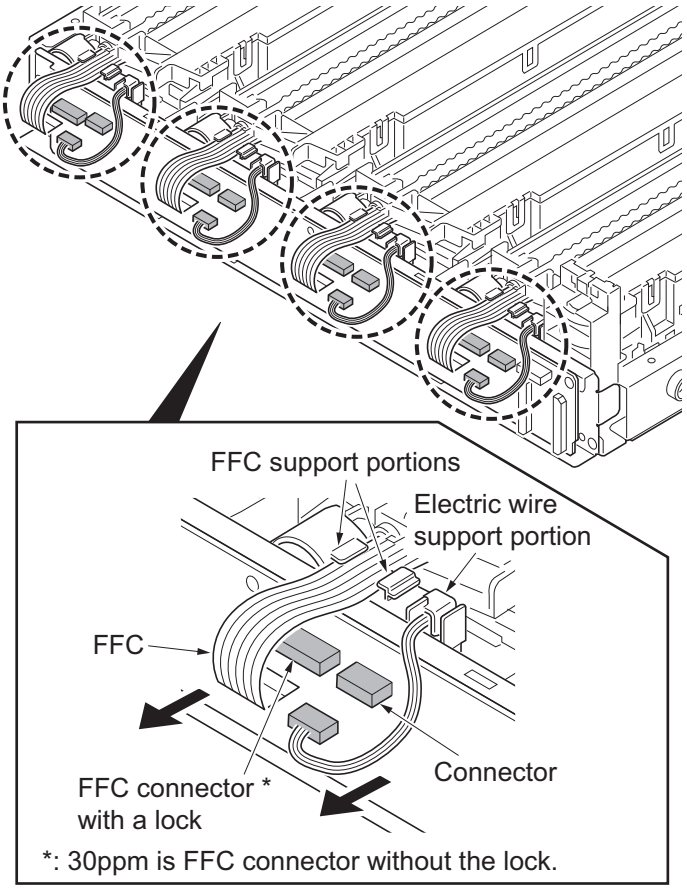

Figure 1-5-77

21. Remove the LSU retainer pins and the springs.
22. Remove two screws each and then remove the LSU front holder.

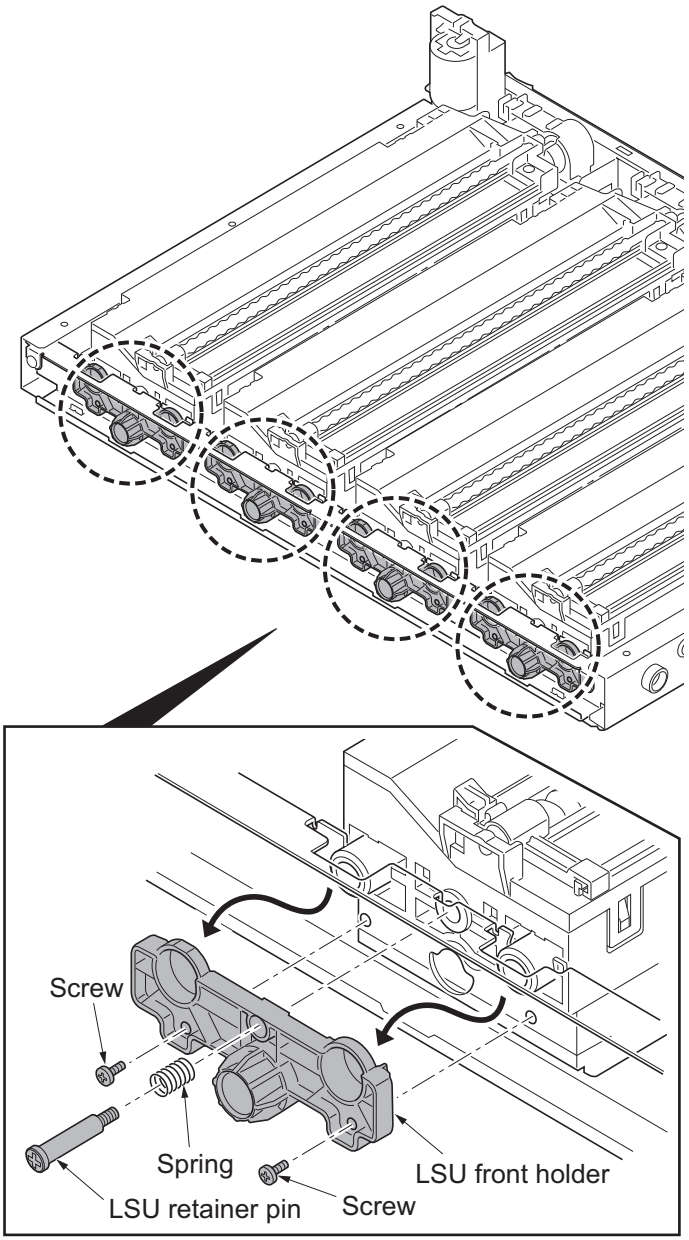

Figure 1-5-78

23. Wrap an antistatic discharging belt around your wrist to prevent damage to the LSU.
    *: Do not touch terminals and FFC contacts in the APC PWB of the LSU.
24. Remove four LSUs, following the precautions and instructions below.
    (1) Lift the far end of the LSU.
    (2) Unhook the protrusions at the front of the LSU.
    *: Be sure to handle the front and rear handholds when handling the LSU.
    *: Do not get the LSU in direct contact with the holding frame subsequently applying shocks to the polygon motor inside.

25. Check or replace the LSU and refit all the removed parts.
    *: When reconnecting FFCs, be sure to insert the FFC all the way in with the FFC connector.This is to avoid a lengthy servicing due to a possible error which could cause re-disassembly and -assembly.

26. When replacing the new LSU, proceed as follows:
    1)Perform the color registration adjustments described on next page, 5.
    2)Perform maintenance mode U119 (Setting the drum) (see page 1-3-92).
    3)Perform maintenance mode U464 (Calibration) (see page 1-3-197).
    4)Perform maintenance mode U412 (Adjusting the uneven density) (see page 1-3-182).
    5)Perform maintenance mode U464 (Calibration) (see page 1-3-197).
    6)Perform maintenance mode U410 (Adjusting the halftone automatically) (see page 1-3-172).

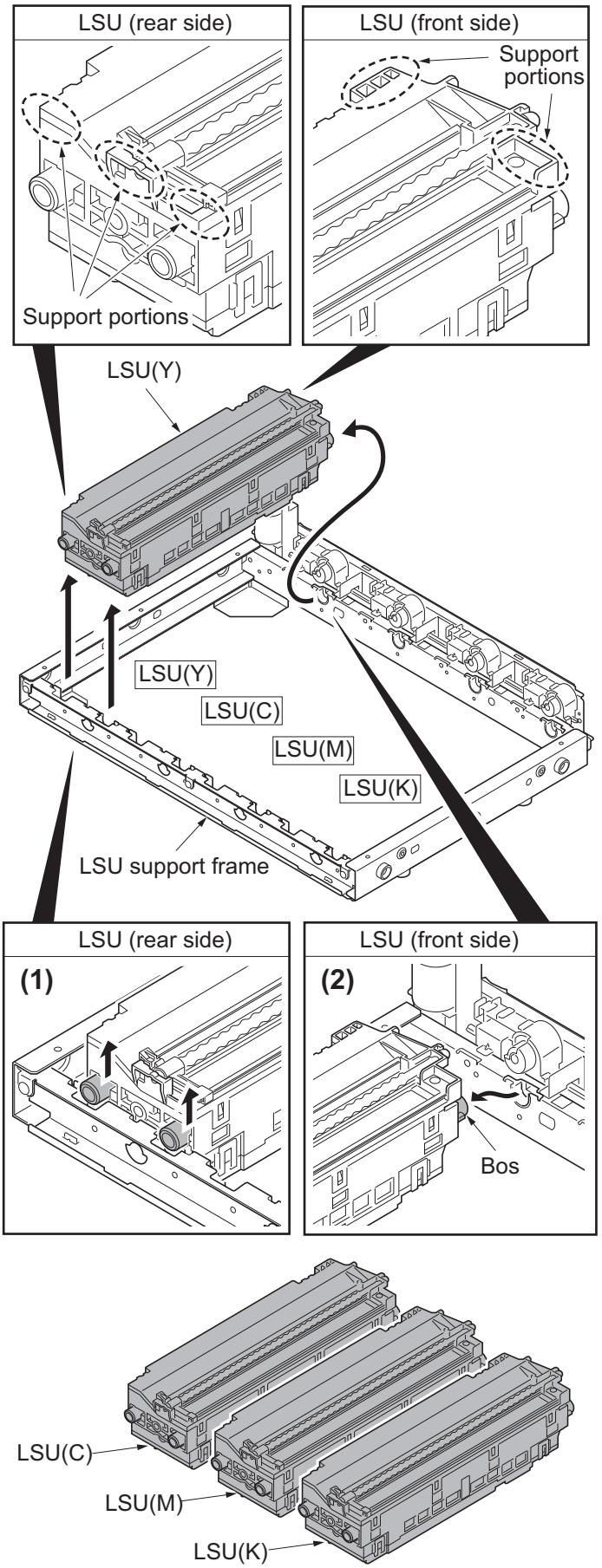

Figure 1-5-79

(5) Color registration adjustment

Follow the procedure below to replace the laser scanner unit.

Procedure

1. Press the system menu key.
2. Press [Adjustment/Maintenance], [Calibration] and then [Start]. Calibration begins.

Auto correction

3. Press [Color Registration], [Auto] and then [Start]. A chart is printed.
4. Place the printed chart as the original and then [Start]. Color registration begins.

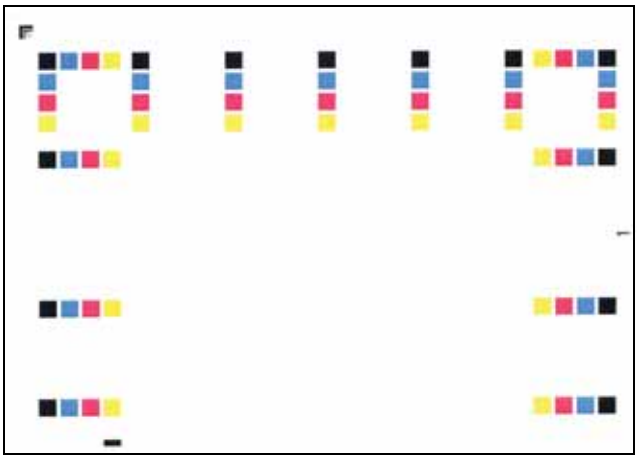

Chart for adjustment

Figure 1-5-80

Manual correction

5. Press [Color Registration], [Manual], [Chart] and then [Ptint]. A chart is printed.
6. Press [Registration].
   Read figures at MH-1 to 7/CH-1 to 7/YH-1 to 7 and MV-3/CV-3/YV-3 of the reference chart and enter the figure marked at the scale which the BK fine line is in line with the M/C/Y fine lines, using the +/- keys.
7. Press [Start] after all values have been entered. Color registration begins.

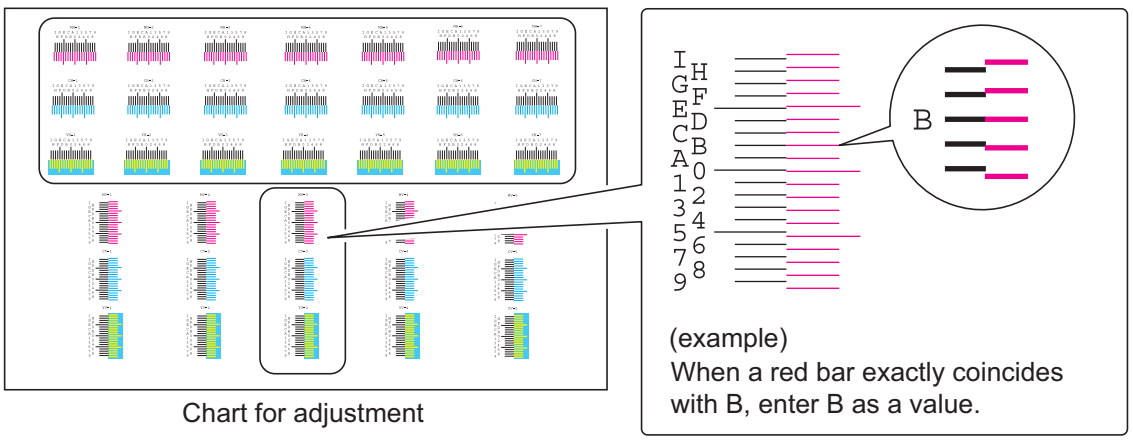

Chart for adjustment

Figure 1-5-81

8. Press [Chart] and [Print] to print a chart.
9. Verify that each scale is within the range of 1to A. If they are within the range, proceed to step 10.
   If scales are out of range, repeat steps 6 through 9.

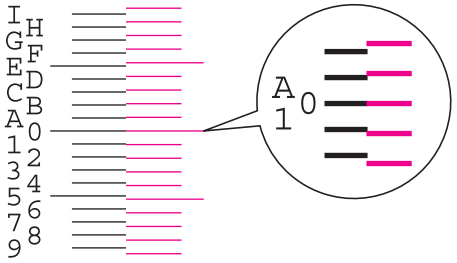

The scale must be corresponding within the range of "A" from "1".

Figure 1-5-82

10. Verify that scales of MV-1,2,4,5/CV-1,2,4,5/YV-1,2,4,5 coincide within the range of 1 to A.
    If they are within the range, adjustment is complete.
    If they are out of range, proceed to step 11.

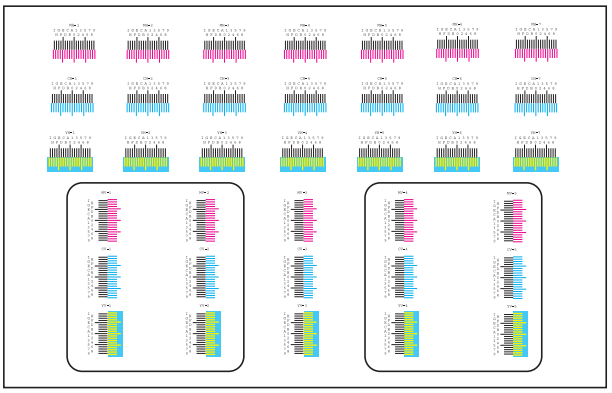

Chart for adjustment

Figure 1-5-83

If manual color registration has failed:

11. If the balance between V-1 and V-5 is more than 2 scales (sample 1) or less than -2
    scales (sample 2), perform the following steps:

Sample 1

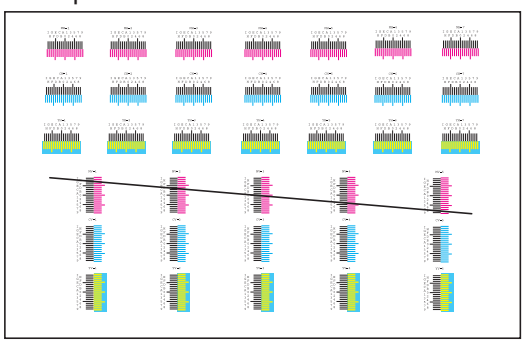

V-1 V-2 V-3 V-4 V-5

Sample 2

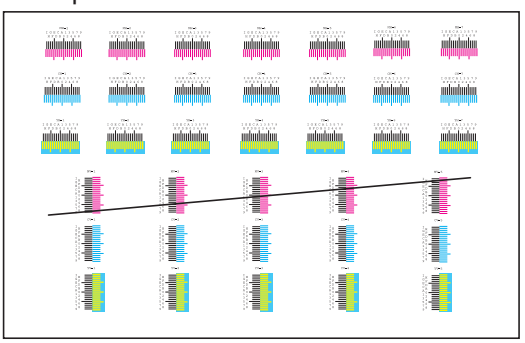

V-1 V-2 V-3 V-4 V-5

Figure 1-5-84

12. Open the front cover and then pull out the waste toner box tray (see page 1-5-55).
13. Rotate the adjustment knob using a 5 mm hex wrench.
    Direction of rotation
    (V-1 - V-5) >= 2 scales (sample 1): rotate counterclockwise.
    (V-1 - V-5) <= -2 scales (sample 2): rotate clockwise.
    Number of rotation
    (V-1- V-5) x 4 clicks
14. Refit the waste toner box tray as before and then close the front cover.
15. Perform calibration using U464 after switching off and on the main power switch.
16. Print a reference chart (U469) and verify the result.

*: After the adjustment for the abgle of the mirror has been made, run the maintenance mode U464 (Calibration). (see page 1-3-197)

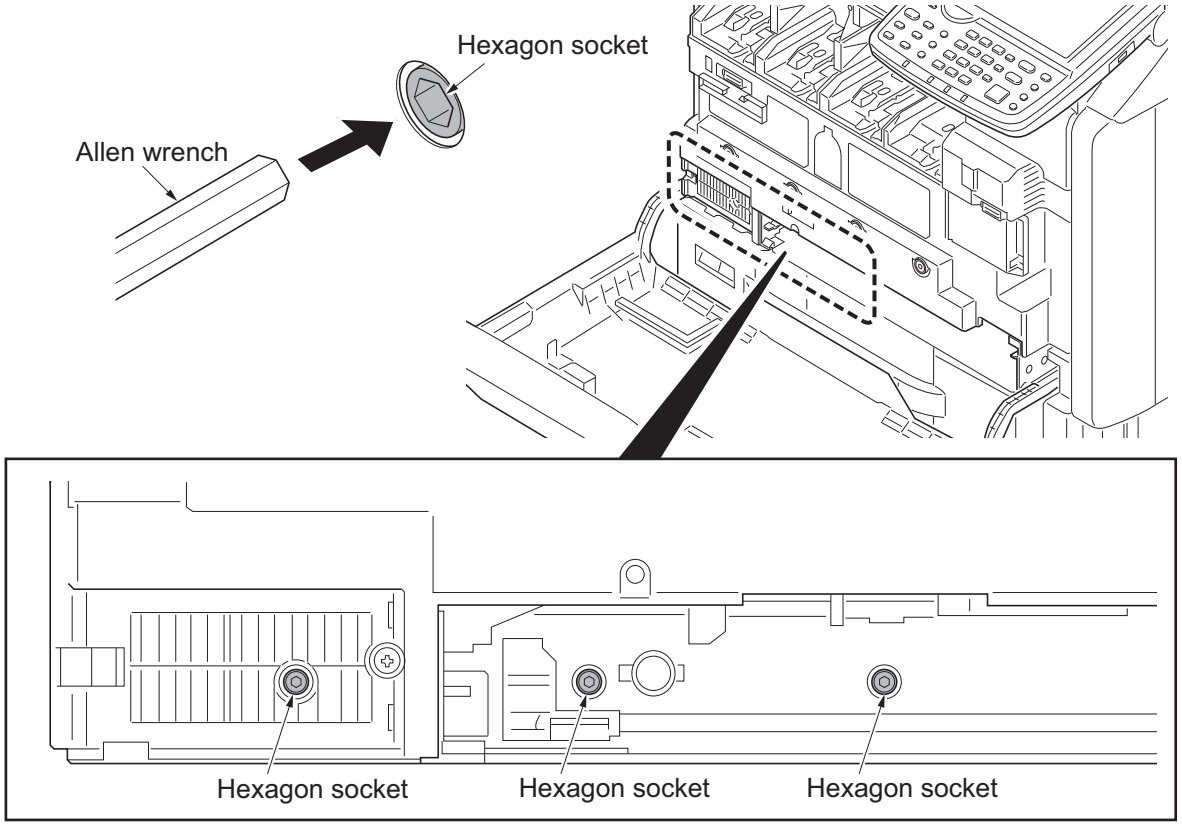

Figure 1-5-85

(6) LSU squareness adjustment

Follow the procedure below to replace the laser scanner unit.

<confirmation >

1. Execute the light axis adjustment using the maintenance mode U034 (paper timing data settings).
2. Print 5 test copies. (From any of the paper sources)

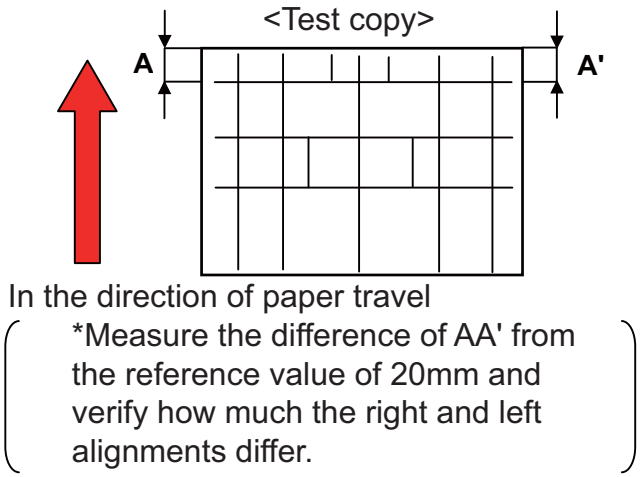

Figure 1-5-86

3. If the test copy appears to shift in the direction of main scanning (due to LSU), measure the amount of shift* and perform the following:

*: If the test copy appears to shift in the directions of both main and sub scanning, the following procedure is not necessary because a paper conveyance failure is suspected.

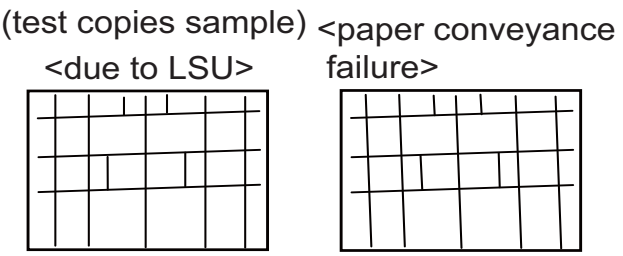

Figure 1-5-87

<adjust>

1. Remove the left cover (see page 1-5-10)
2. Remove four screws and then remove the LSU retainer.

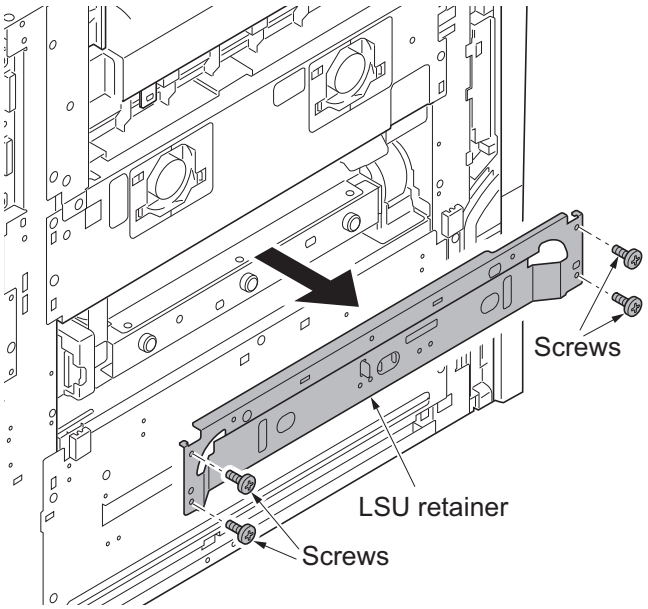

Figure 1-5-88

3. Loosen the two screws, position the alignment board and the LSU fixing mount so that they are exactly aligned, and fix the two screws. The scale position should be determined depending on the amount of shifts sight-checked in step 2 of the section Confirmation above.
4. Mount the LSU mounting bracket on the machine using the four screws.
5. Perform the steps 1 and 2 above again and verify that the shifts are improved.
6. After the LSU squareness has been adjusted, perform the following:
   Perform maintenance mode U464 (Calibration). (see page 1-3-175)
   Perform maintenance mode U469 (Auto color registration correction) (see page 1-3-205).

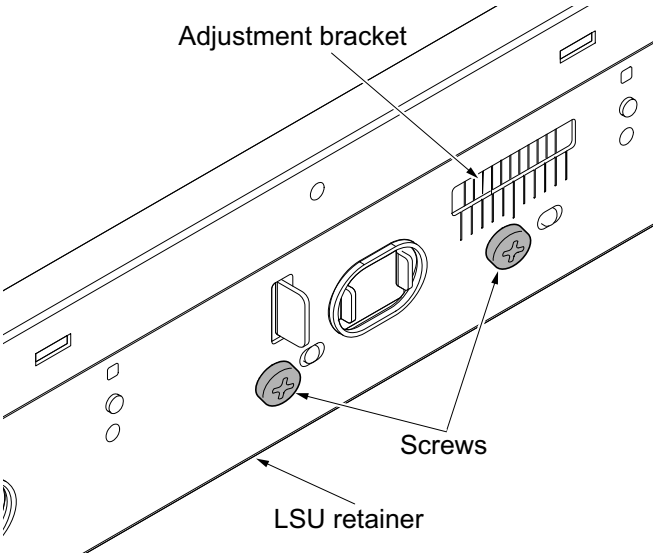

Figure 1-5-89

To adjust, move the knob left and right so that the marking on the adjuster bracket and that on the LSU mounting bracket are coincided.

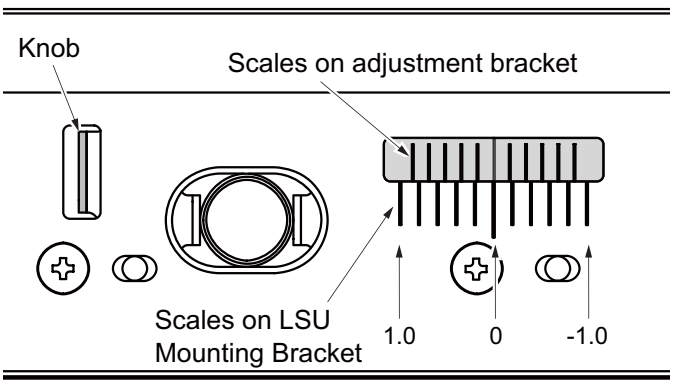

∗ 0.2 increment for the scale

Amount of adjustment changes (reference)

Amount of image shifts Scale position		Scale position
Right side up	1.0	Farthest left (about 1.5mm)
	0.67	1.0
	0.53	0.8
	0.40	0.6
	0.27	0.4
	0.13	0.2
Reference value	0	0
Left side up	0.13	-0.2
	0.27	-0.4
	0.40	-0.6
	0.53	-0.8
	0.67	-1.0
	1.0	Farthest right (about 1.5mm)

1-5-5 Image formation section

(1) Detaching and refitting the inner unit

Procedure

1. Open the front cover.
2. Remove all toner container each.
3. Remove the waste toner box tray by lifting upwards and from the right side.

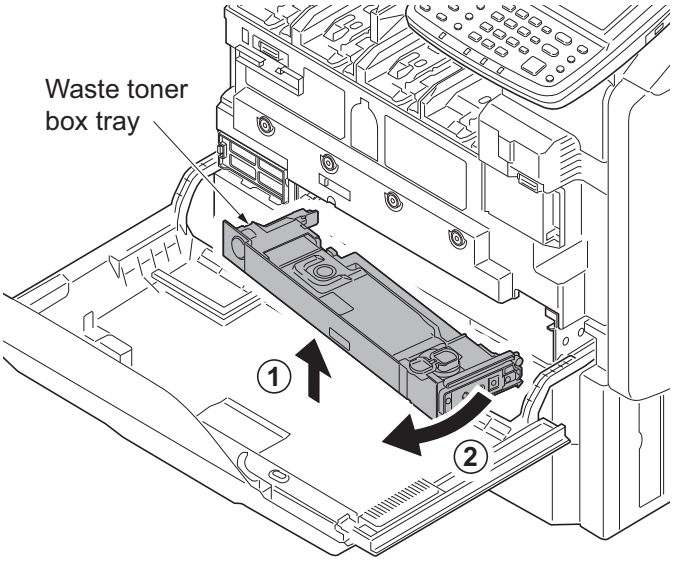

Figure 1-5-91

4. Remove the screw and then open the connector cover.
5. Remove the connector.

*: Remove the seal behind that connector is recessed.

6. Remove four fixed screws of inner unit.

*: Remove the seal behind that one screw is recessed.
Replace the seal in position.

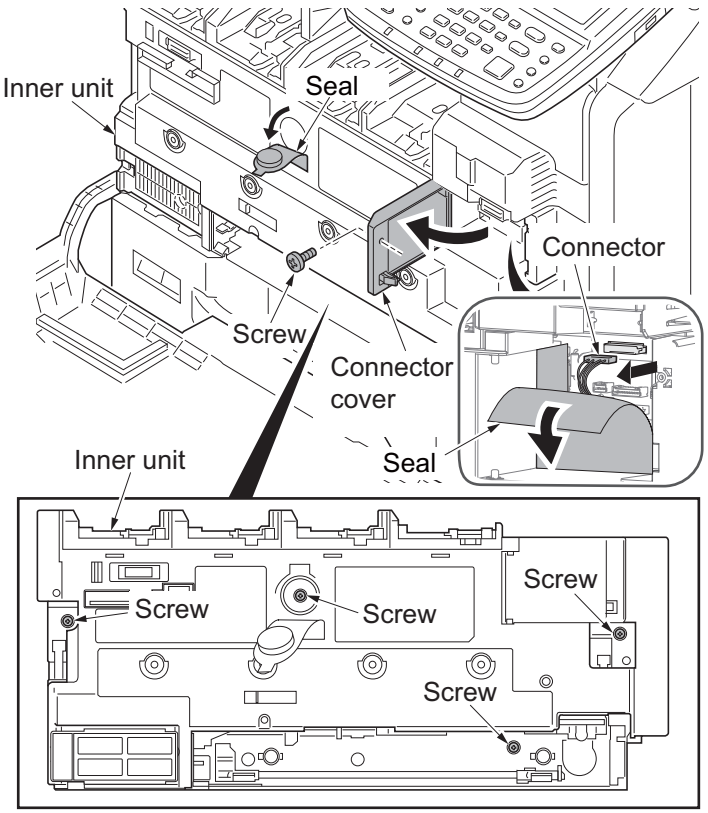

Figure 1-5-92

7. Release the lock by pushing the fixed levers at the right and left of inner unit.
8. Remove the inner unit.

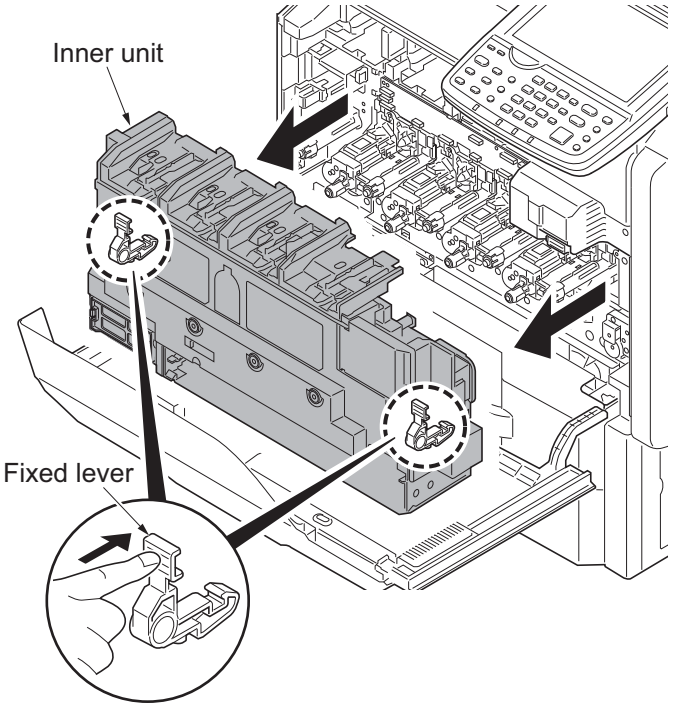

Figure 1-5-93

(2) Detaching and refitting the developer unit and drum unit

Detaching example: Developer unit Y and Drum unit Y

Procedure

1. Remove the fuser unit (see page 1-5-68).
2. Pull the transfer belt unit out a little (see page 1-5-62).
3. Remove the inner unit (see page 1-5-55).
4. Close the toner supply shutter.
5. Remove two connectors.

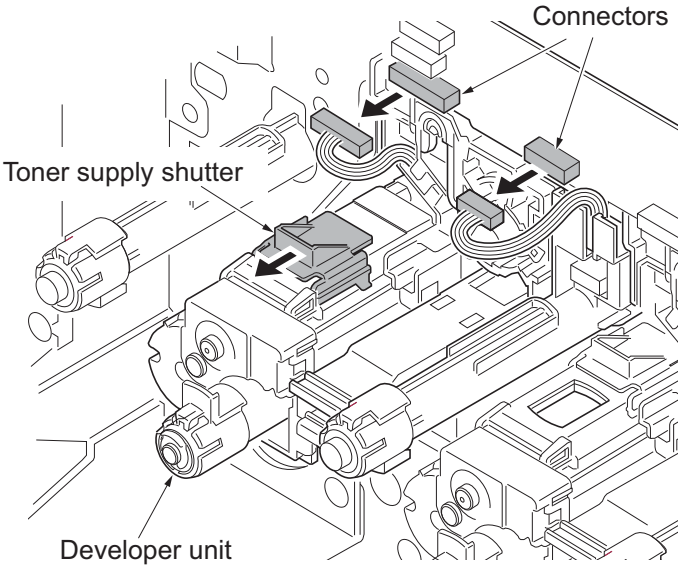

Figure 1-5-94

6. Pull out as one body the developer unit and the drum unit.
   (The developer unit becomes basic and the drum units are combined.)
7. Detach the developer unit while supporting bottom.

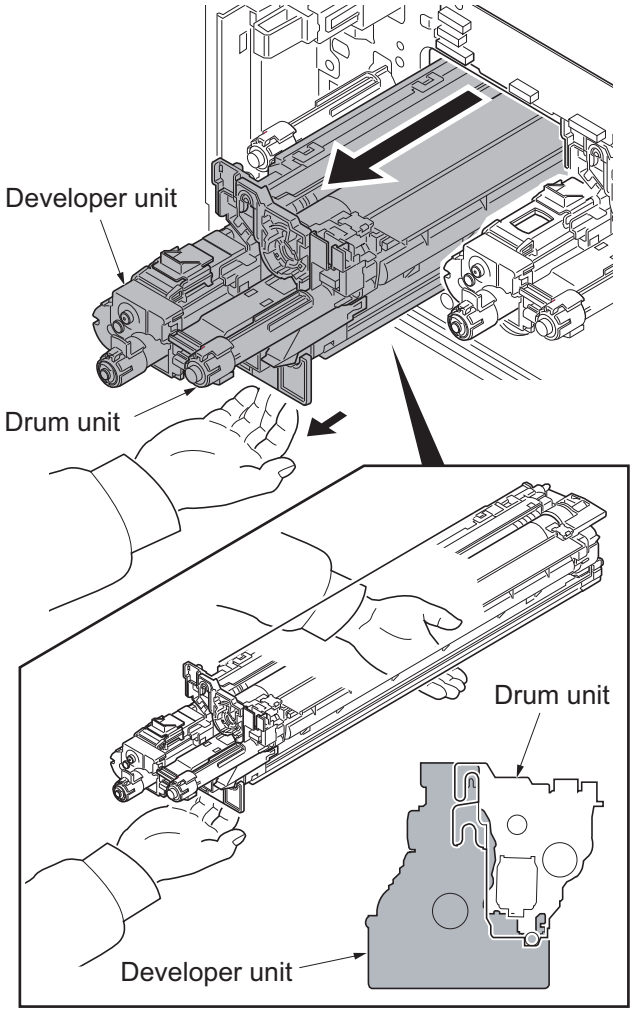

Figure 1-5-95

8. Remove the drum unit from the developer unit.
9. Check or replace the drum unit and the developer unit and refit all the removed parts.

*: When a new development unit is installed, the developing roller protective sheet must be removed.

*: To install the drum unit onto the developer unit, insert the front end first, then the rear end of the unit.

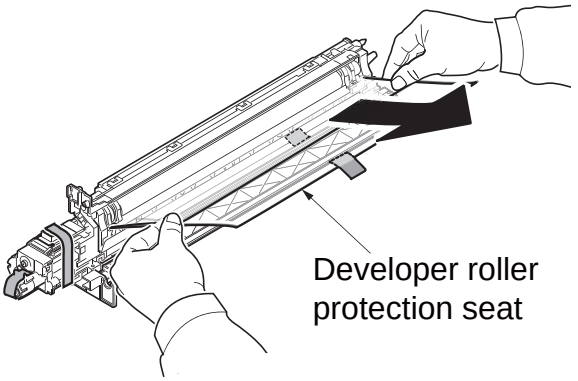

Figure 1-5-96

10. When replacing the new developer unit, proceed as follows:
    1)Perform maintenance mode U140 (AC calibration) for 45 ppm/55 ppm model only (see page 1-3-99).
    2)Perform maintenance mode U464 (Calibration) (see page 1-3-197).
    3)Perform maintenance mode U469 (Auto color registration correction) (see page 1-3-205).
    4)Perform maintenance mode U410 (Adjusting the halftone automatically) (see page 1-3-172).

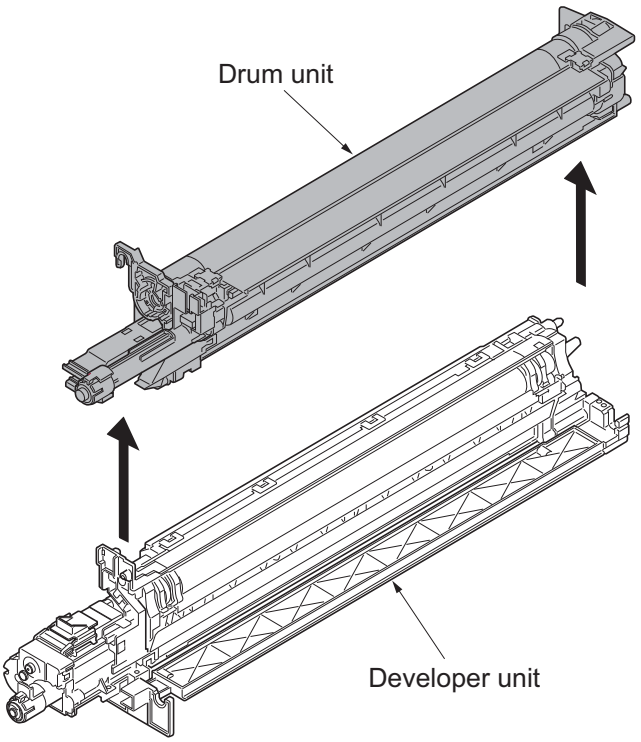

Figure 1-5-97

11. When replacing the new drum unit, proceed as follows:
    1)Performing LSU cleaning (see the operation guide)
      Press [Adjustment/Maintenance] and then [Next] of [Laser Scanner Cleaning].
      Press [Execute] to perform LSU cleaning.
    2)Perform maintenance mode U119 (drum setup) (see page 1-3-92).
    3)Perform maintenance mode U930 (checking/clearing the charger roller count) and checking the counter value (see page 1-3-230).
    4)Perform maintenance mode U140 (AC calibration) for 45 ppm/55 ppm model only (see page 1-3-99).
    5)Perform maintenance mode U464 (Calibration) (see page 1-3-197).
    6)Perform maintenance mode U469 (Auto color registration correction) (see page 1-3-205).
    7)Perform maintenance mode U412 (Adjusting the uneven density) (see page 1-3-182).
    8)Perform maintenance mode U464 (Calibration) (see page 1-3-197).
    9)Perform maintenance mode U410 (Adjusting the halftone automatically) (see page 1-3-172).

(3) Detaching and refitting the charger roller unit

Detaching example: Charger roller unit Y

Procedure

1. Remove the inner unit (see page 1-5-55).
2. Pull out the charger roller unit by picking and releasing the MC lock lever.
3. Check or replace the charger roller unit and refit all the removed parts.

*: When refitting the charger roller unit, that must hook the hook certain by operating the MC lock lever after inserting the charger roller unit until bumping.

4. When replacing the new charger roller unit, proceed as follows:
   Perform maintenance mode U930 (clearing the charger roller count) (see page 1-3-230).
   Perform maintenance mode U464 (Calibration) (see page 1-3-197).
   Perform maintenance mode U410 (Adjusting the halftone automatically) (see page1-3-172).

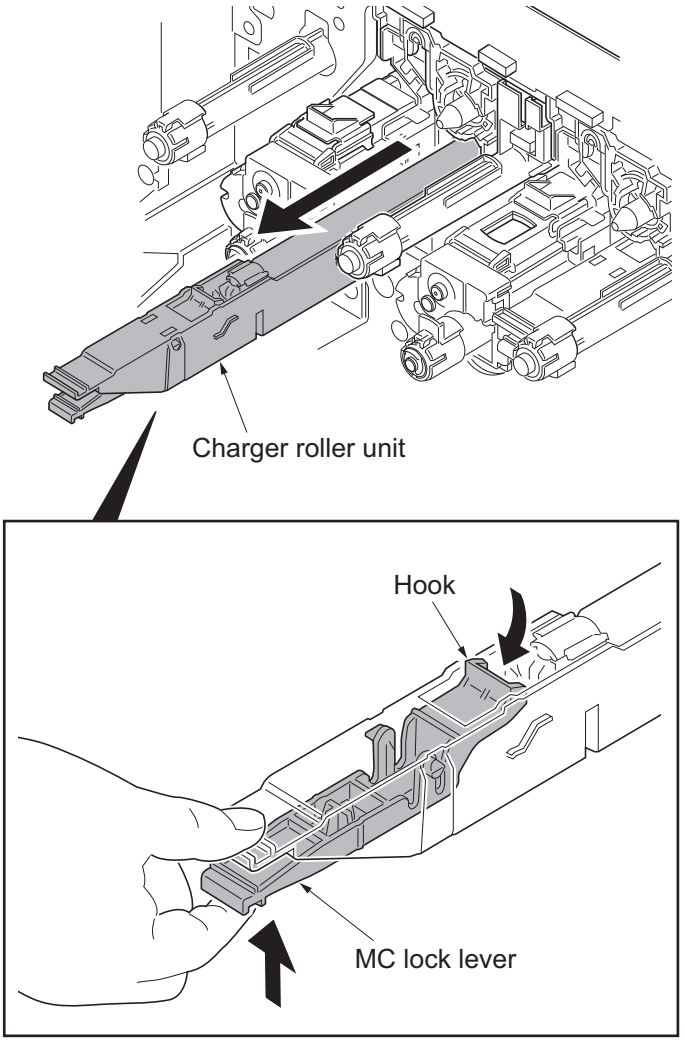

Figure 1-5-98

1-5-6 Transfer section

(1) Detaching and refitting the paper conveying unit

Procedure

1. Pull the paper conveying unit out.
2. Remove three screws.
3. Unhook three hooks and then remove the right front cover.

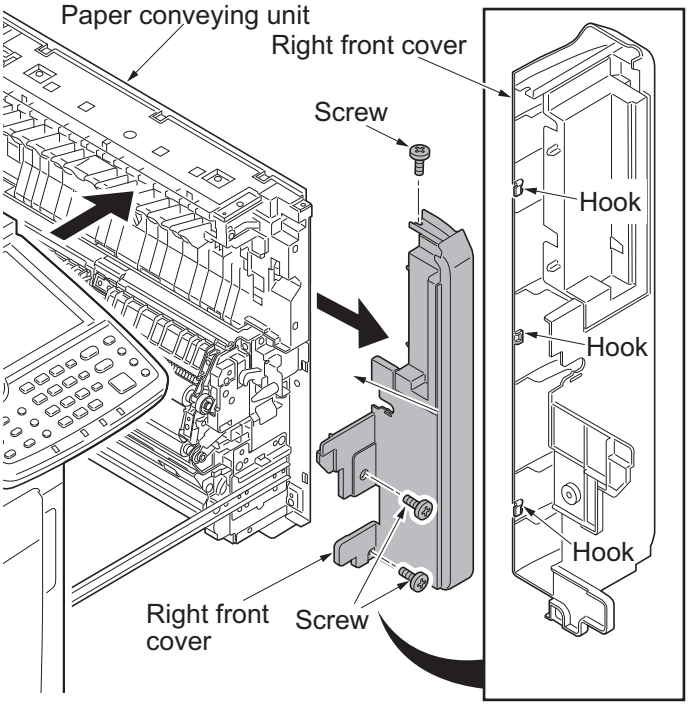

Figure 1-5-99

4. Unhook two hooks and then remove the conveying inner cover from the paper conveying unit.

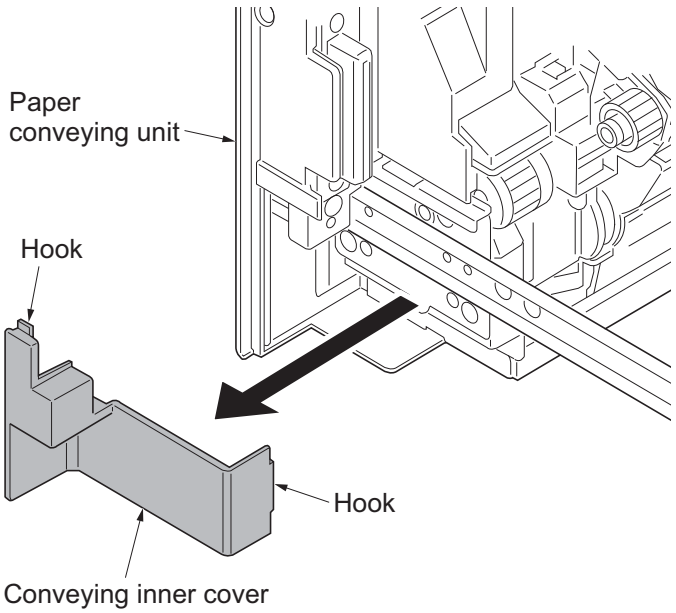

Figure 1-5-100

5. Remove four screws.
6. Remove the paper conveying unit by lifting upward.

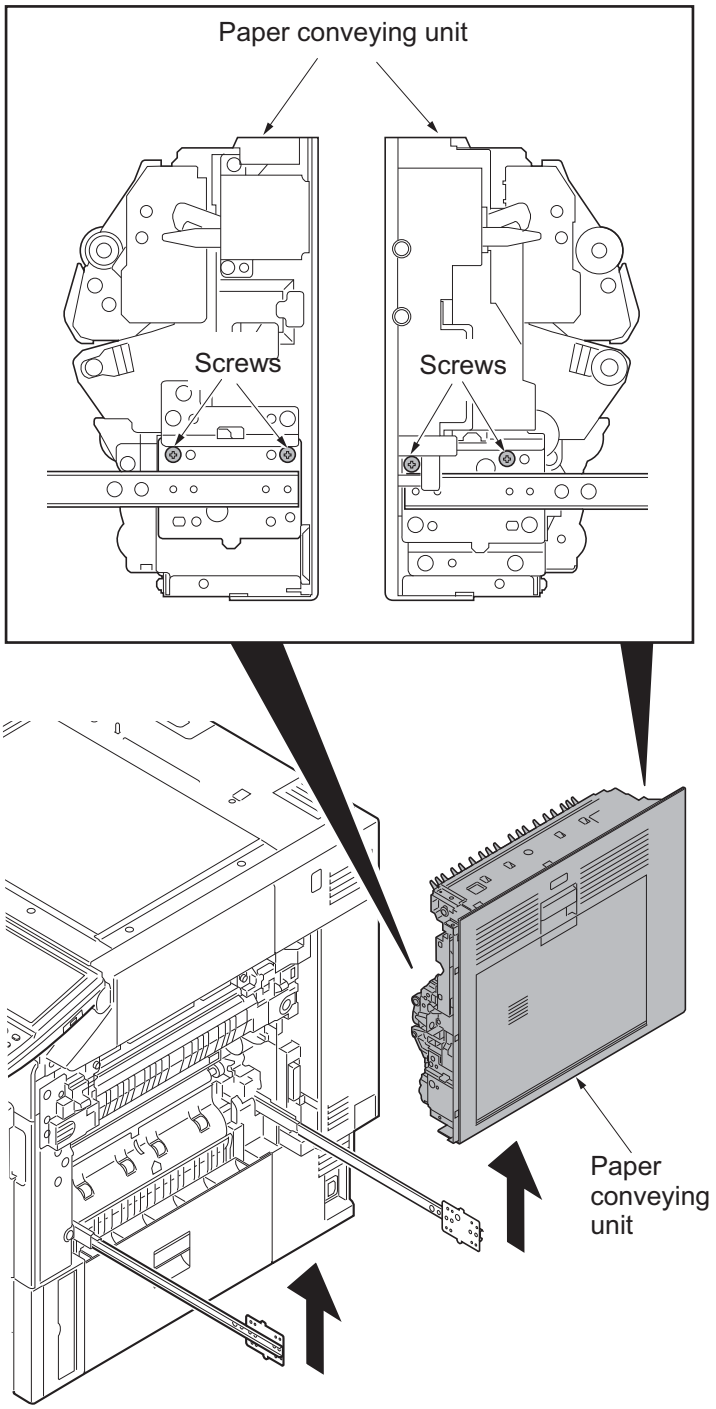

Figure 1-5-101

(2) Detaching and refitting the transfer belt unit

Procedure

1. Remove the paper conveying unit (see page 1-5-60).
2. Remove the fuser unit (see page 1-5-68).
3. Remove the connector.

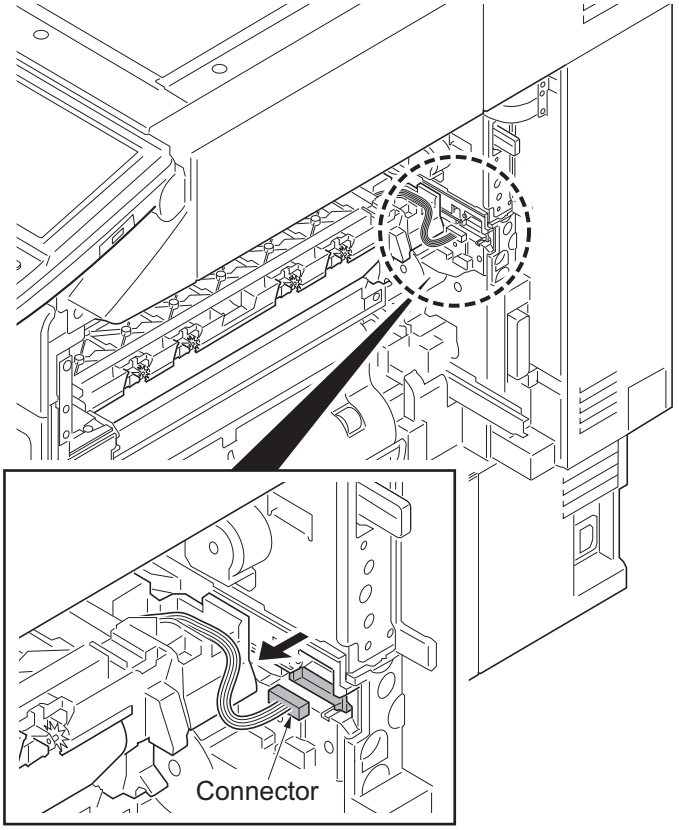

Figure 1-5-102

4. Pull out the transfer belt unit by lifting up both ends.

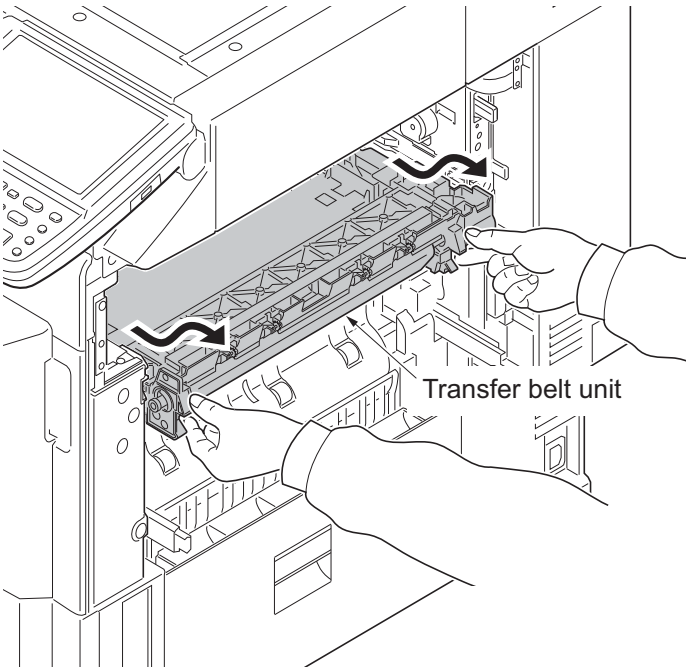

Figure 1-5-103

5. Remove the transfer belt unit.
6. Check or replace the transfer belt unit and refit all the removed parts.

*: When refitting the new transfer belt unit, set the projected part aligned with the rail entrance.

7. When replacing the new transfer belt unit, proceed as follows:
   1)Perform maintenance mode U469 (Transfer belt speed correction) (see page 1-3-205).
   2)Perform maintenance mode U464 (Calibration) (see page 1-3-197).
   3)Perform maintenance mode U469 (Auto color registration correction) (see page 1-3-205).
   4)Perform maintenance mode U410 (Adjusting the halftone automatically) (see page 1-3-172).

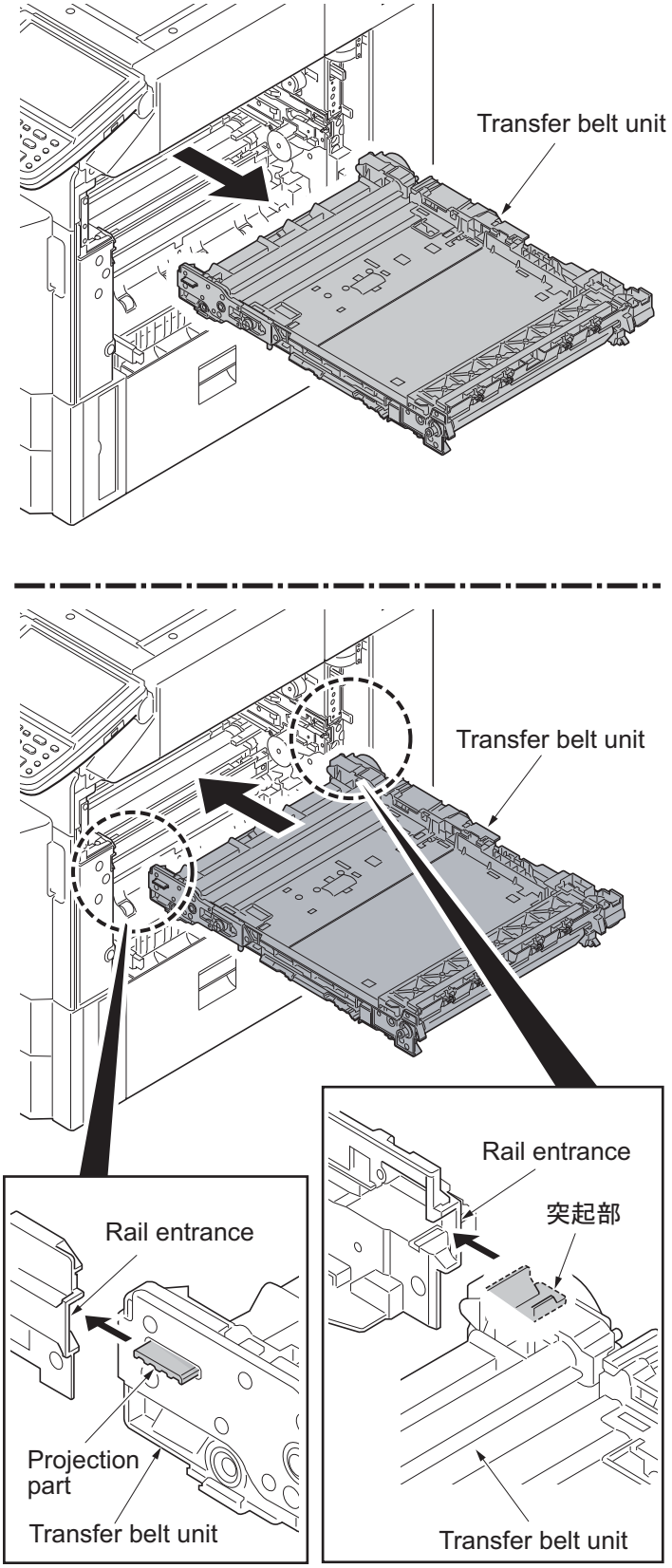

Figure 1-5-104

(3) Detaching and refitting the cleaning pre brush

Procedure

1. Remove the transfer belt unit (see page 1-5-62).
2. Unhook the front and back springs from the hooks.

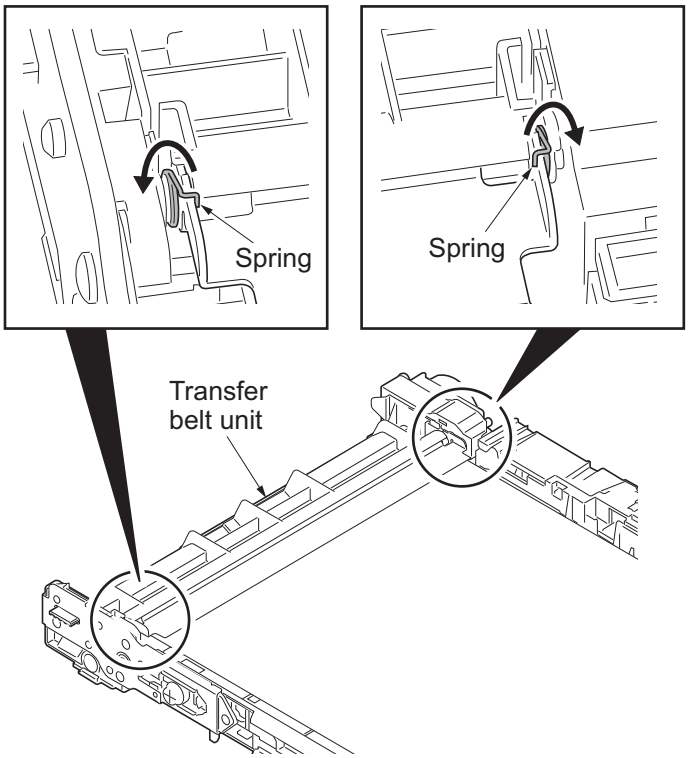

Figure 1-5-105

3. Unhook two hooks and then remove the cleaning cover.

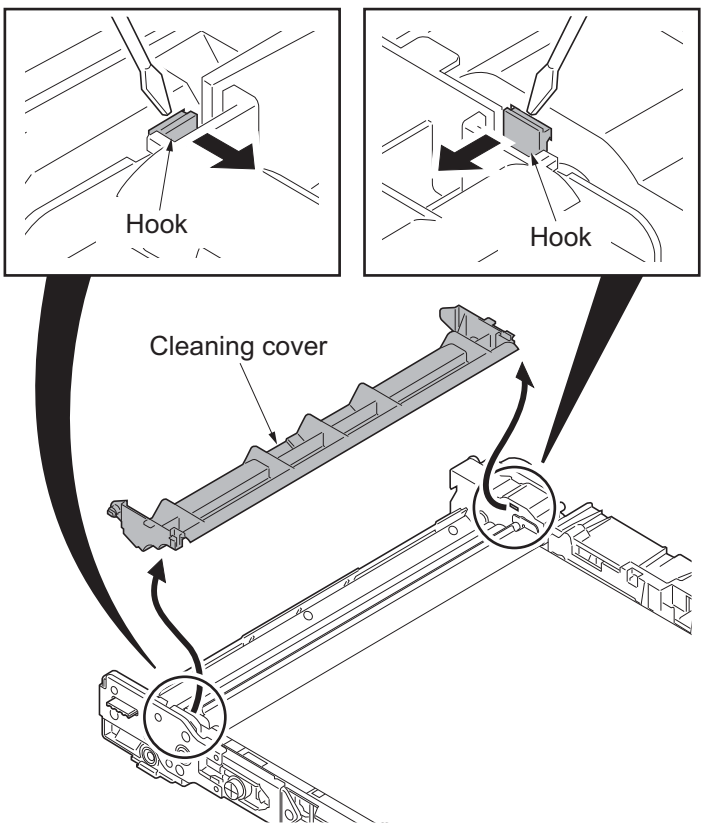

Figure 1-5-106

4. Remove the cleaning pre brush by turning it as shown.
5. Check or replace the cleaning pre brush and refit all the removed parts.

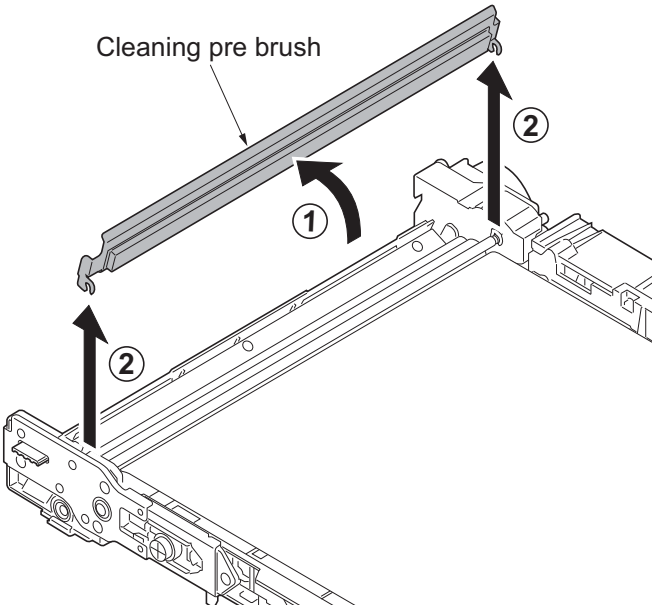

Figure 1-5-107

*: Hook the springs back in place onto the cleaning pre brush when installing.

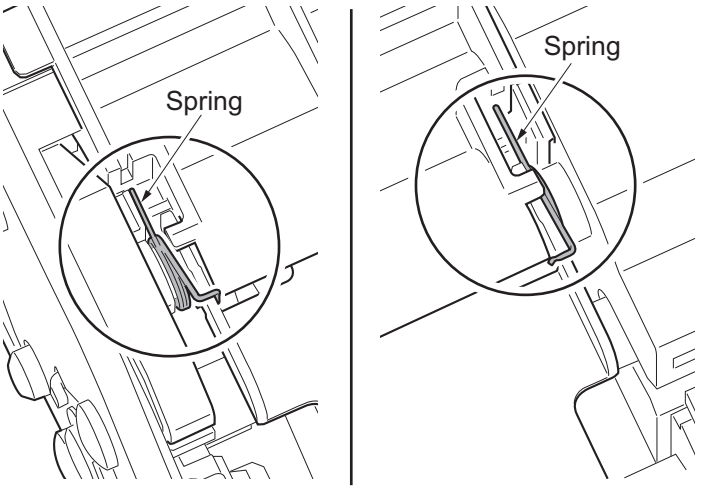

Figure 1-5-108

(4) Detaching and refitting the transfer roller

Procedure

1. Pull out the paper conveying unit.

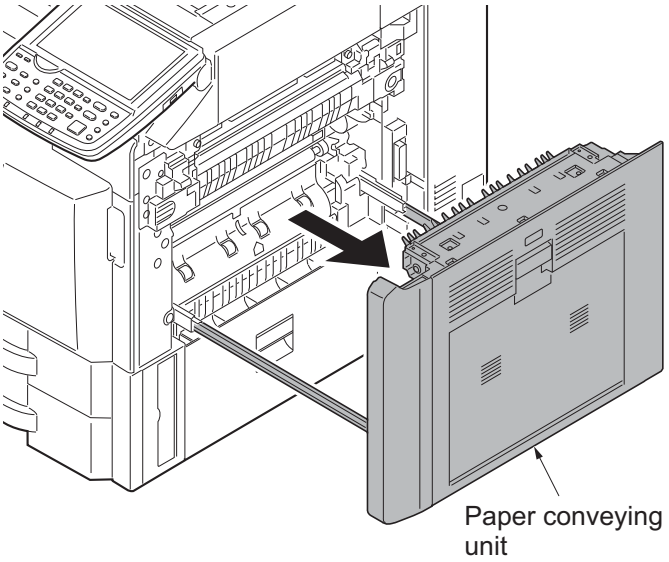

Figure 1-5-109

2. Loosen two fixed screws on the TC guide.
3. Remove the stop ring.
4. Unhook the hook and remove the TC gear Z29R.
5. Remove two bearings.
6. Remove the transfer roller.

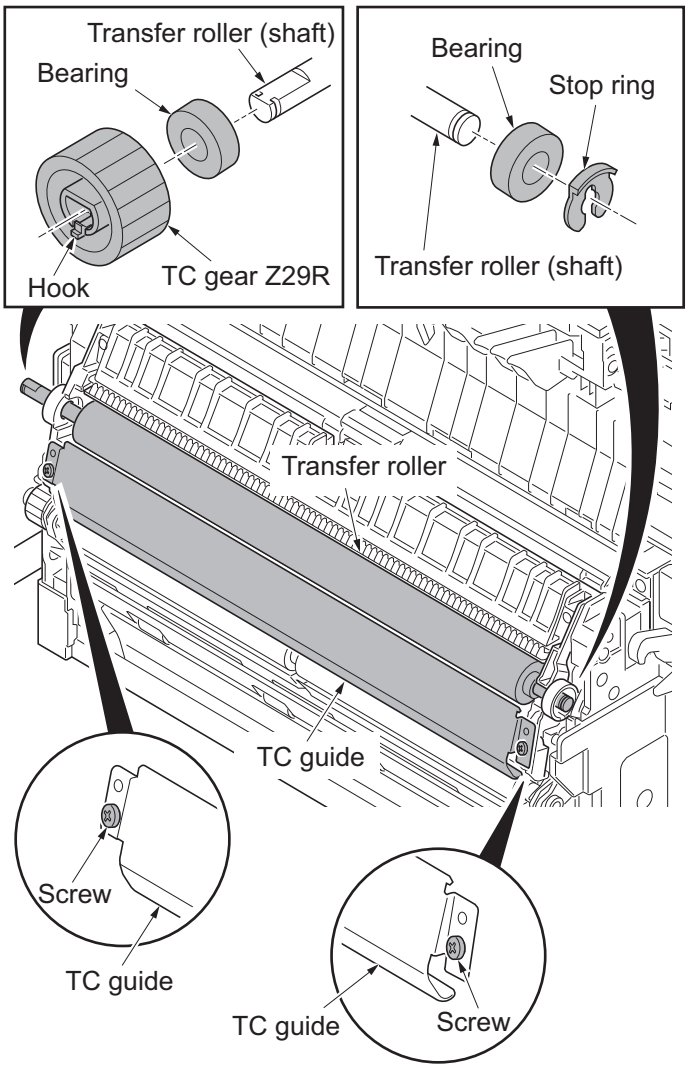

Figure 1-5-110

7. Check or replace the transfer roller and refit all the removed parts.
*: When refitting the transfer roller, confirm that the terminal of the ground plate is in contact with the ground plate in the frame.

8. When replacing the new transfer roller, proceed as follows:
   1)Perform maintenance mode U127 (clearing the transfer counter) (see page 1-3-93).
   2)Perform maintenance mode U464 (Calibration) (see page 1-3-197).
   3)Perform maintenance mode U469 (Auto color registration correction) (see page 1-3-205).
   4)Perform maintenance mode U410 (Adjusting the halftone automatically) (see page 1-3-172).

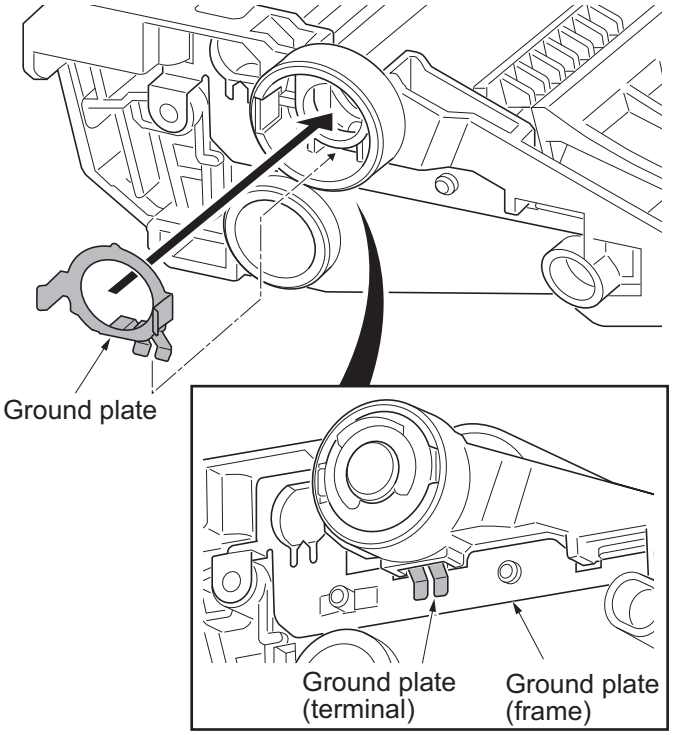

Figure 1-5-111

1-5-7 Fuser section

(1) Detaching and refitting the fuser unit

Procedure

1. Pull out the paper conveying unit.
2. Remove the screw and then the fuser wire cover.
3. Remove two connectors

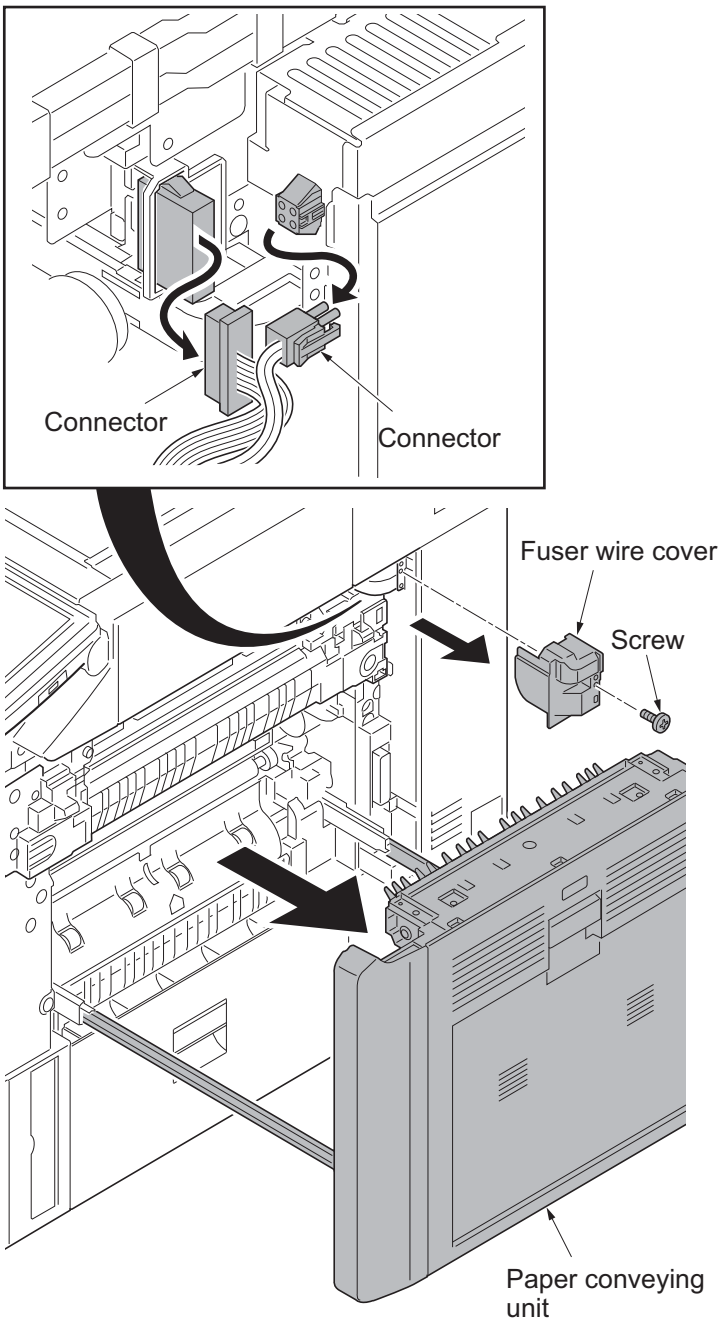

Figure 1-5-112

4. Remove four screws (M4 × 10) and then remove the fuser unit.
5. Check or replace the fuser unit and refit all the removed parts.

6. When replacing the new fuser unit, proceed as follows:
   1)Perform maintenance mode U167 (clearing the fuser count) (see page 1-3-112).
   2)Perform maintenance mode U464 (Calibration) (see page 1-3-197).
   3)Perform maintenance mode U469 (Auto color registration correction) (see page 1-3-205).
   4)Perform maintenance mode U410 (Adjusting the halftone automatically) (see page 1-3-172).

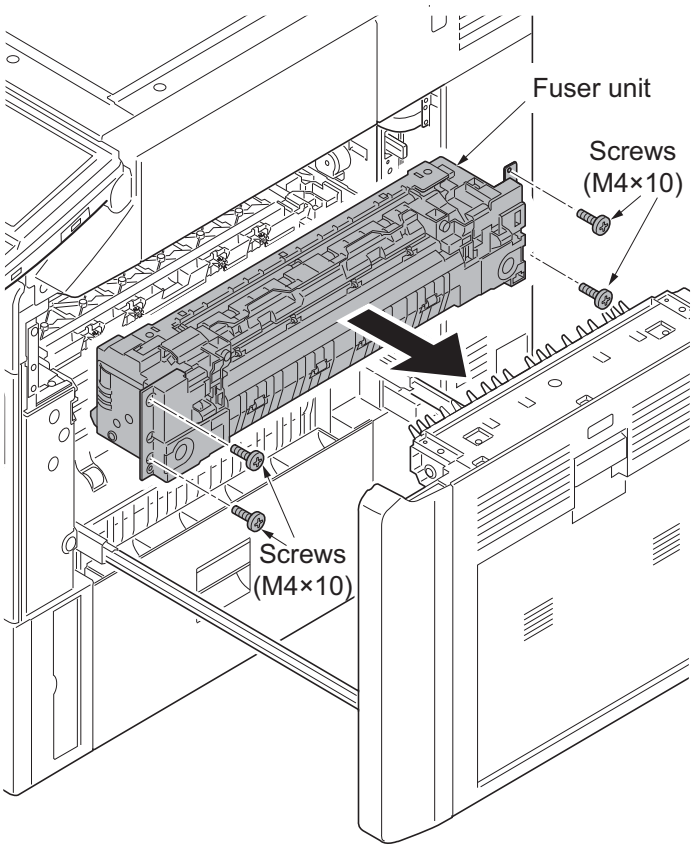

Figure 1-5-113

(2) Detaching and refitting fuser IH unit

Procedure

1. Remove the rear upper cover and the rear lower cover (see page 1-5-96).
2. Remove the fuser unit (see page 1-5-68).
3. Remove the right upper cover (see page 1-5-96).
4. Remove the right middle rear cover (see page 1-5-96).
5. Remove four screws and then remove the fuser IH PWB cover (see page 1-5-96).
6. Remove the IH electric wire cover (see page 1-5-96).
7. Remove the wire holder.
8. Release the wire saddle.
9. Remove two connectors from the fuser IH PWB according to the following notes.

*: Confirm the power plug is removed from the outlet without fail when you remove the connector because a high current is supplied to fuser IH unit by this connector.

*: Confirm the connected connector was surely locked when you connect this connector again.

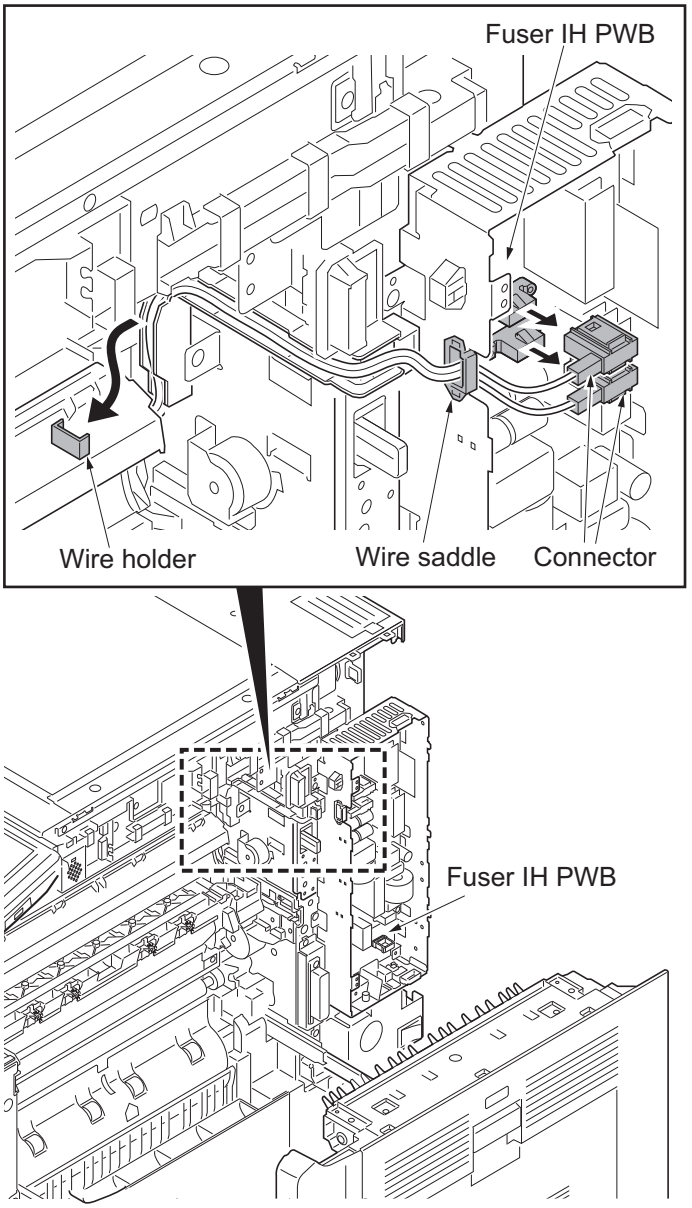

Figure 1-5-114

10. Remove two screws.
11. Unhook the hook by lifting up the fuser IH unit a little and then remove it.

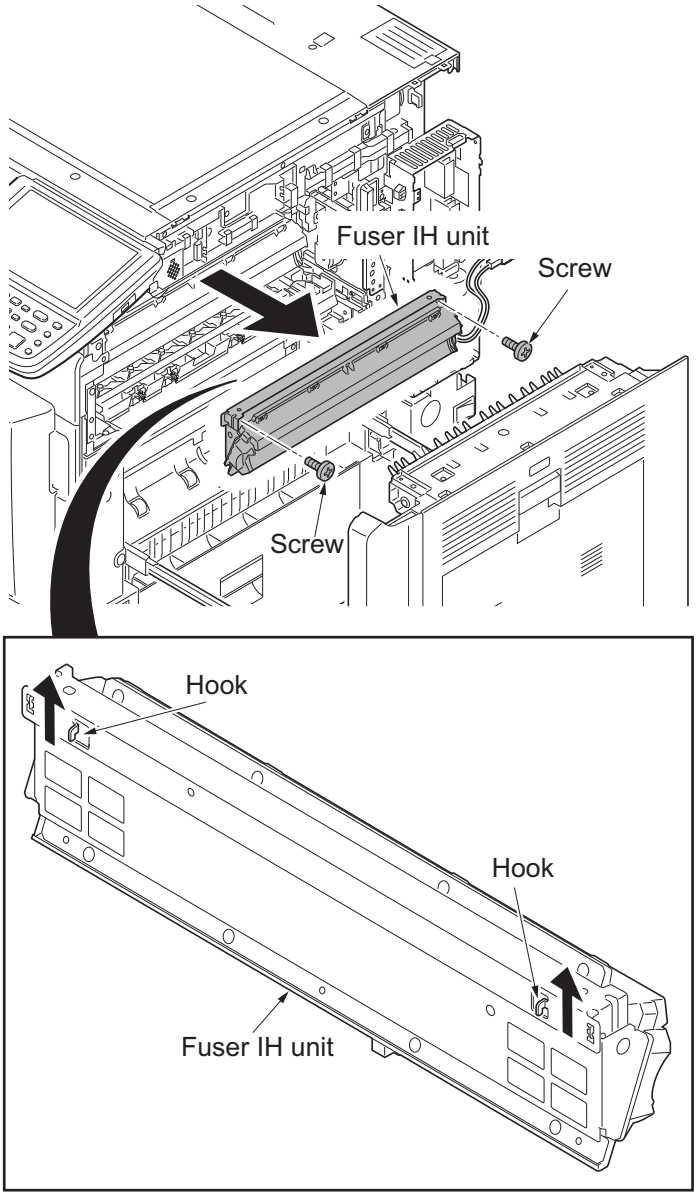

Figure 1-5-115

1-5-8 PWBs

(1) Detaching and refitting the main PWB

Procedure

1. Remove the rear upper cover (see page 1-5-96).
2. Release seven wire saddles on the controller box.
3. Remove the wire holder.

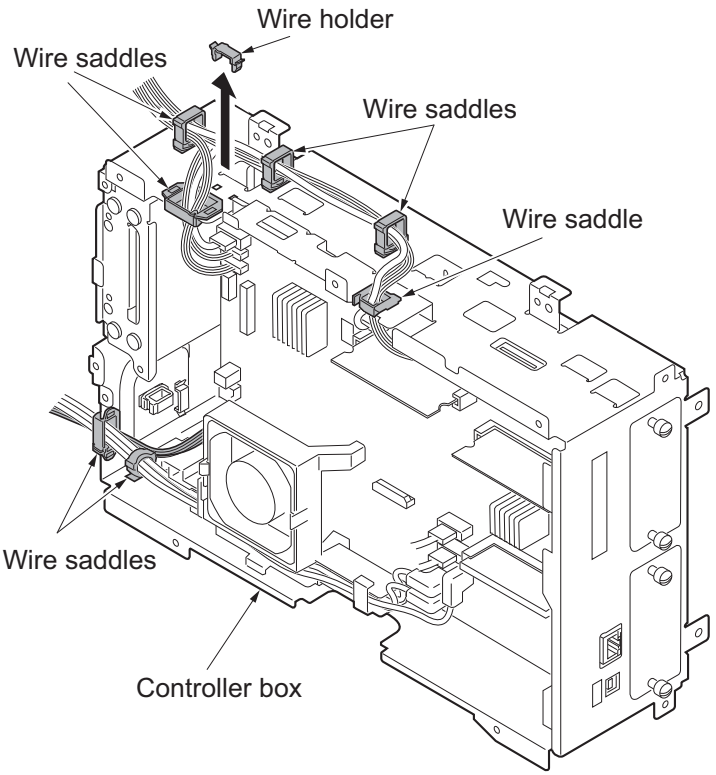

Figure 1-5-116

4. Remove the following connectors that connected to the main PWB from the outside of the control box.
   YC25
   YC11
   YC30
   YC42
   YC43(Connector type FFC)
   YC21(WH)
   YC22(WH)
   YC26(BK)
   YC6
   YC12

*: Before removing the connector type FFC YC43, unlock the lock by pressing the lock levers at both ends.

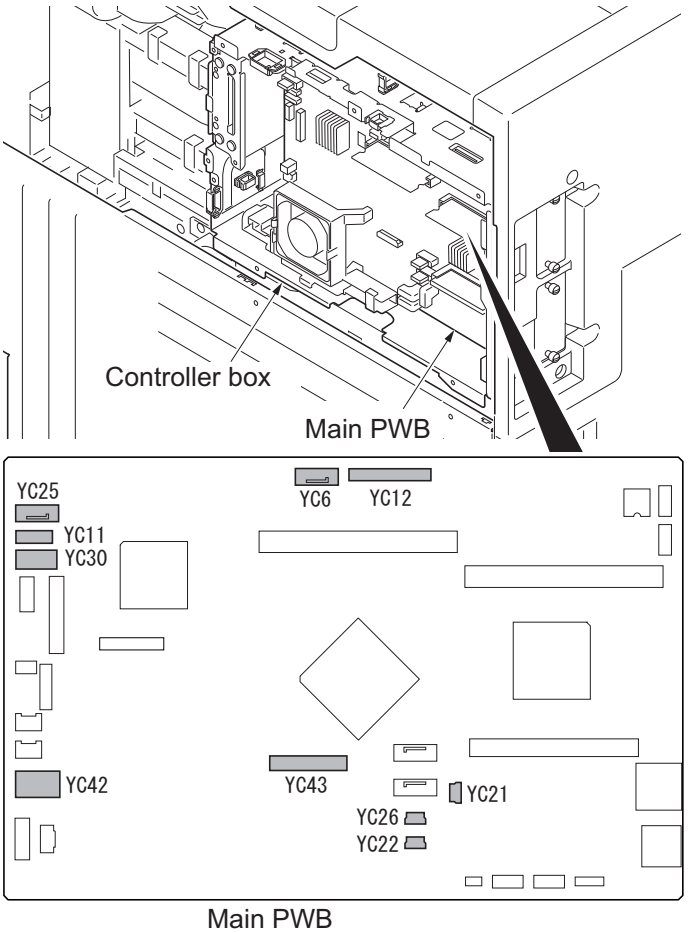

Figure 1-5-117

5. Remove five screws.
6. Unhook two hooks and then remove the controller box.

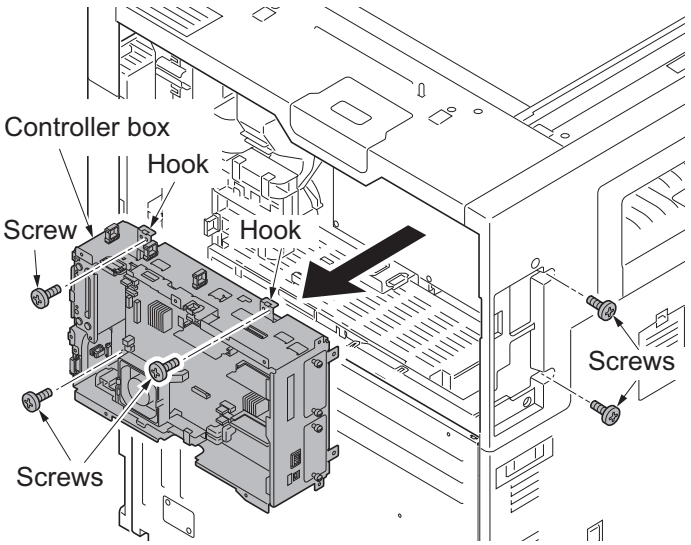

Figure 1-5-118

7. Remove the following connectors that connected to the main PWB.
   YC23
   YC27
   YC32
   YC8 (FFC connector with a lock)
   YC9
   YC1 [BLACK]
   YC2 [BLUE]

*: When removing the FFC from the FFC connector with a lock, remove the FFC after released by lifting down the lock lever.

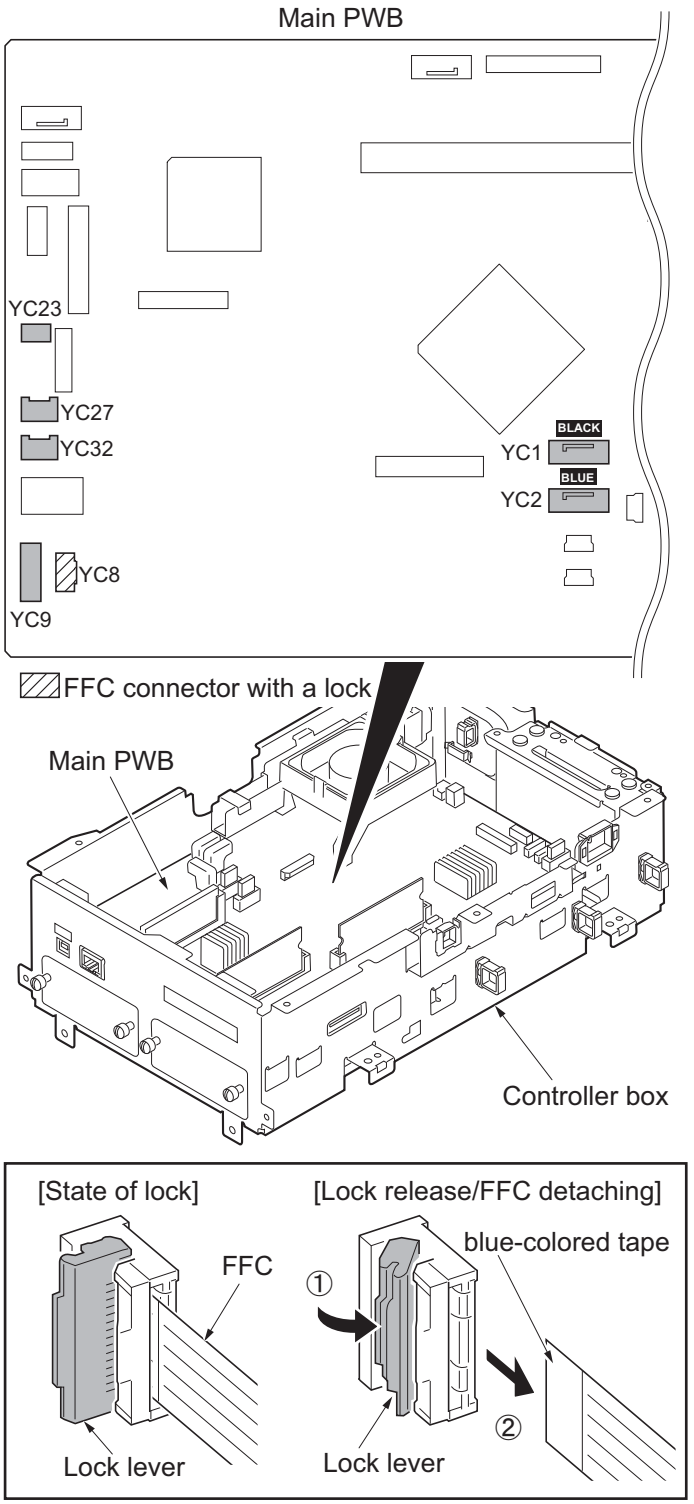

Figure 1-5-119

8. Release the wire saddle.
9. Remove two wire holders.
10. Remove two screws.
11. Remove the fan motor holder.

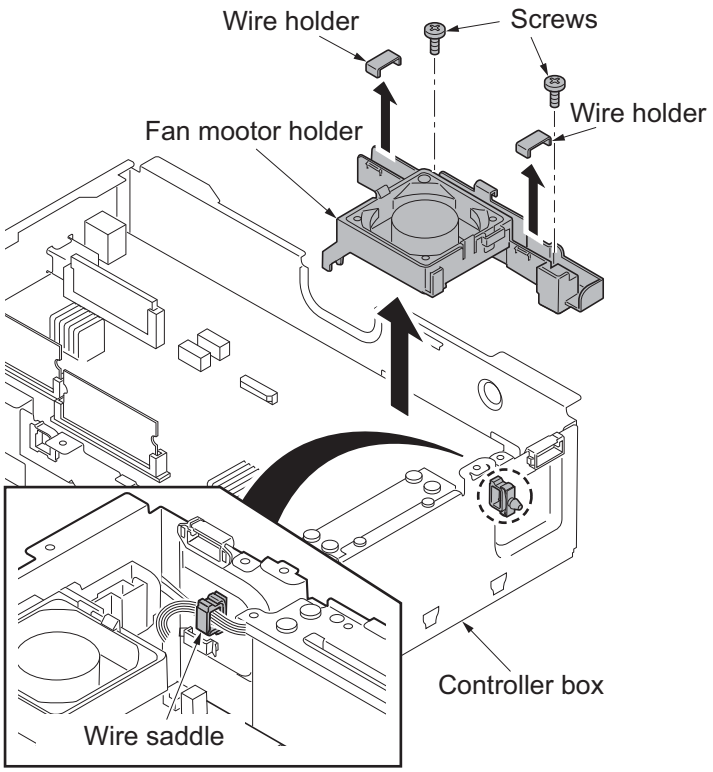

Figure 1-5-120

12. Remove seven screws from the main PWB.

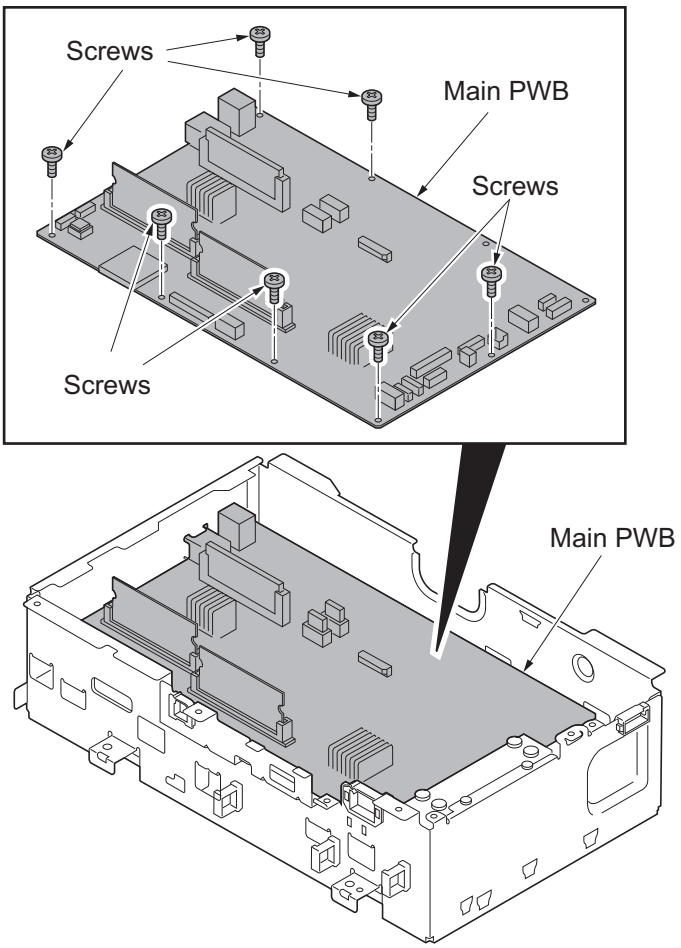

Figure 1-5-121

13. Remove the main PWB by releasing the projection of ground plate in the network connector.
14. Check or replace the main PWB and refit all the removed parts.

*: When replacing the main PWB, remove the following devices from the main PWB and then reattach it to the new main PWB. (see page 1-5-77)

EEPROM (YC14)
Memory DDR (YS1,YS3)

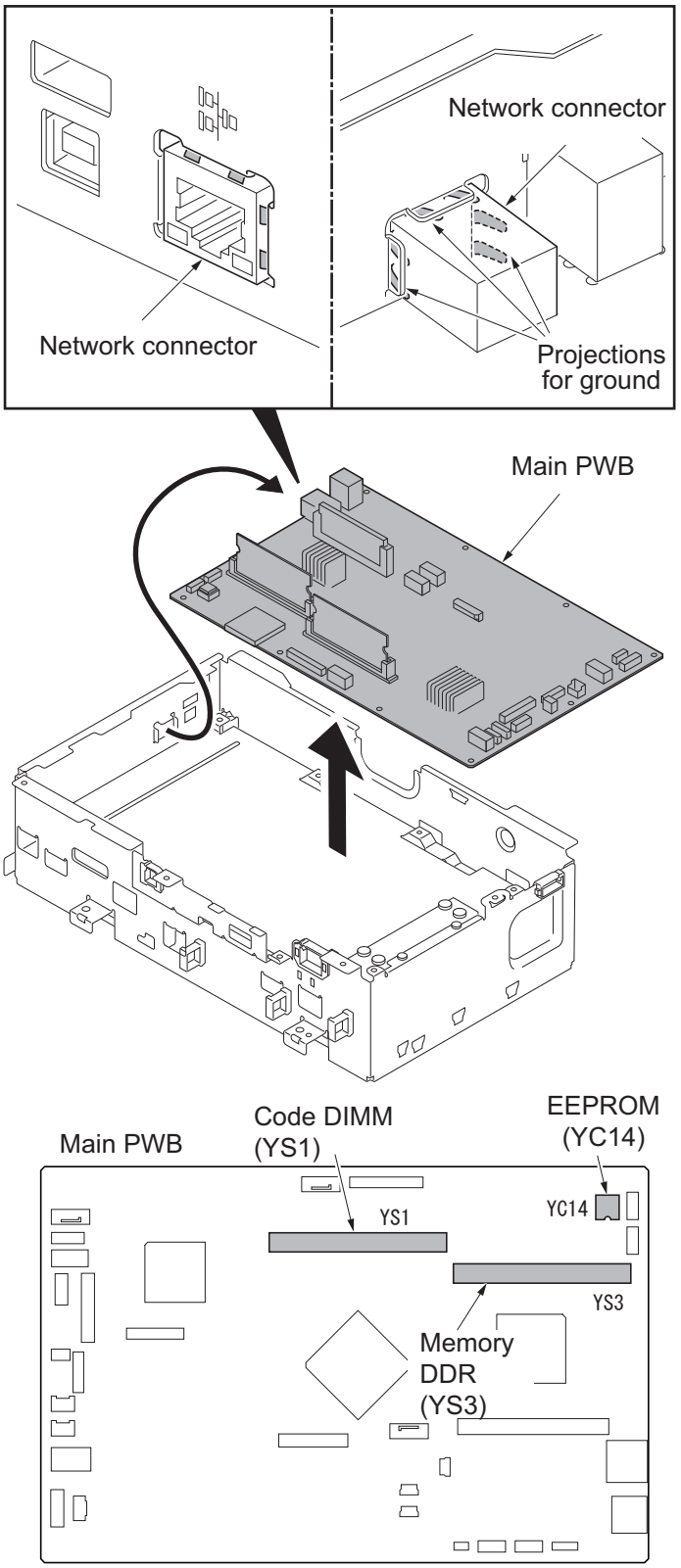

Figure 1-5-122

(2) Remarks on main PWB replacement

When replacing the main PWB, remove the EEPROM (YC14) and DIMM (YS1,YS3) from the main PWB that has been removed and then reattach it to the new main PWB.

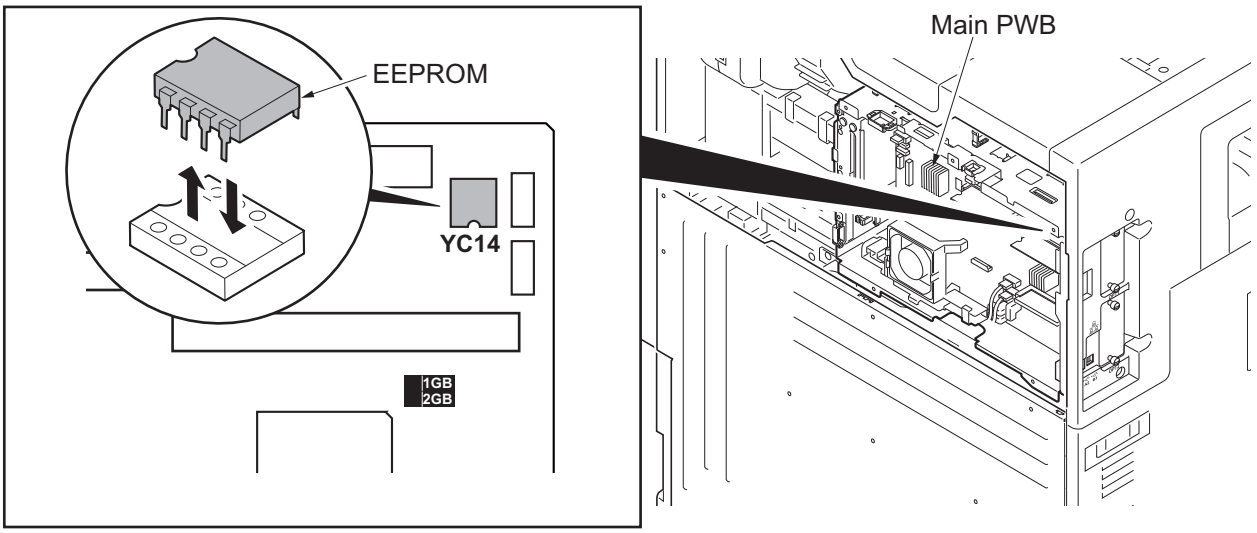

Figure 1-5-123

When refitting DIMM, Refit them to the original positions.

* : YS1 :1GB YS3 :2GB To avoid mounting a wrong memory chip, identify the memory by its label.

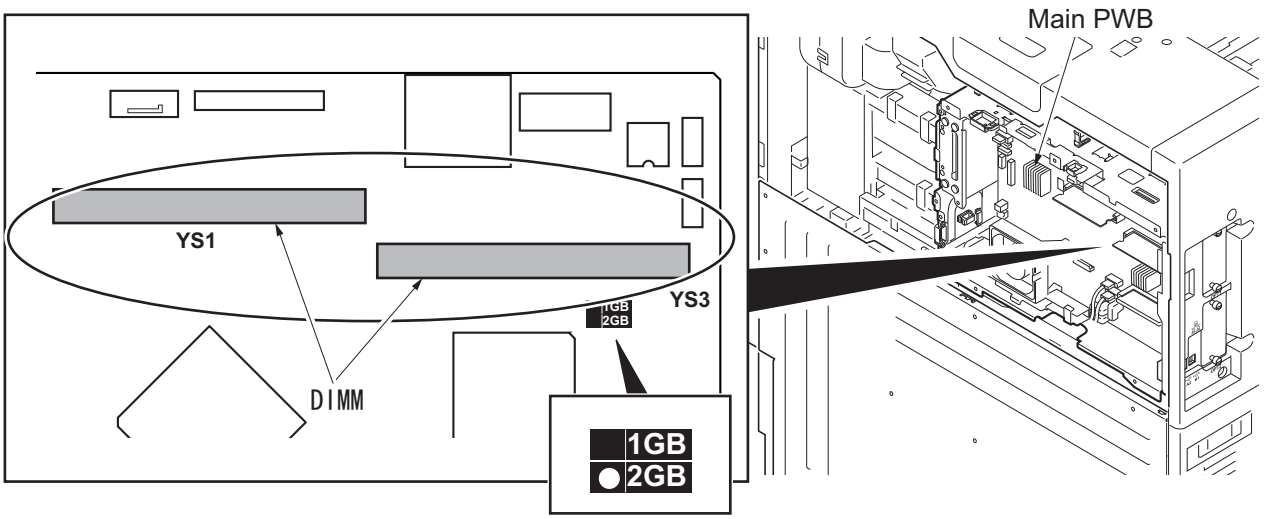

Figure 1-5-124

If the main PWB was replaced with a service supplied part, perform the following.

1. Insert the USB flash device in which an upgrade pack of the latest firmware or the Main/MMI/Browser and Language BR (excluding Dictionary) were copied, into the slot on the machine and turn power on. (see page 1-6-1).
2. After the main-circuit PWB has been replaced, perform U026 to restore backed-up data.

*: Do not replace the main-circuit PWB and the HDD at the same time.
(Otherwise, the settings retained by U026 in the HDD will not become restorable.)

*: Referring to the U000 maintenance report printed previously, enter the following values.
U278 Setting the delivery date
U402 Adjusting margins of image printing
U952 Maintenance mode workflow
*:Since the U952 settings are not printed on the maintenance report, perform U952 to register settings again.

3. Reset machine settings. (Resets system menu settings modified at setup to their defaults.)
   If backup data is saved with the U917 maintenance mode, execute import of the backup data with the U917.
   Main items for settings
   [Date/Timer] - Date/Time settings
   [Date/Timer] - Timer settings (Sleep timer)
   [User/Job accounting] - Defaults for user authentication and job accounting only.
   Resettings are not required as the data are stored in harddisk.

Procedure to be followed after the EEPROM on the main PWB has been replaced

1. Run U004 – model number entry.
   The C0130 (mismatching model number) is displayed when the device is powered up after its EEPROM has been replaced. Restore the counter values and serial number that are stored in the engine EEPROM.
2. Referring to the maintenance report that was printed using U000 at setup, set the following maintenance modes:
   1) U252 - Setting the destination
   2) U265 - Setting OEM purchaser code
3. Reconfigure settings if the U250 maintenance counter preset value has been changed from the initial settings.
4. Run the following maintenance mode for image adjustment:
   1) U410 – Adjusting the halftone automatically

When connecting the hard disk cables (YC1, YC2) to the PWB, match "BLACK" and "BLUE" marked on the PWB with the connector colors.

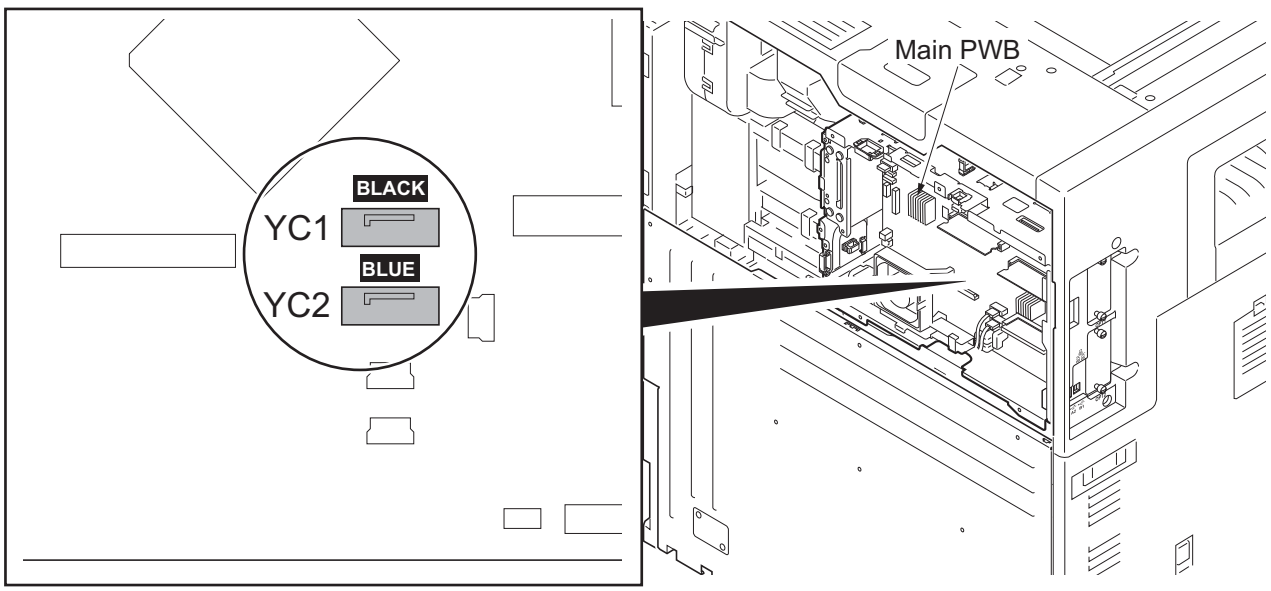

Figure 1-5-125

When connecting the USB cables (YC21, YC22, YC26) to the PWB, connect to the connectors which the cable length match.
(Connecting to any connector is satisfactory.)

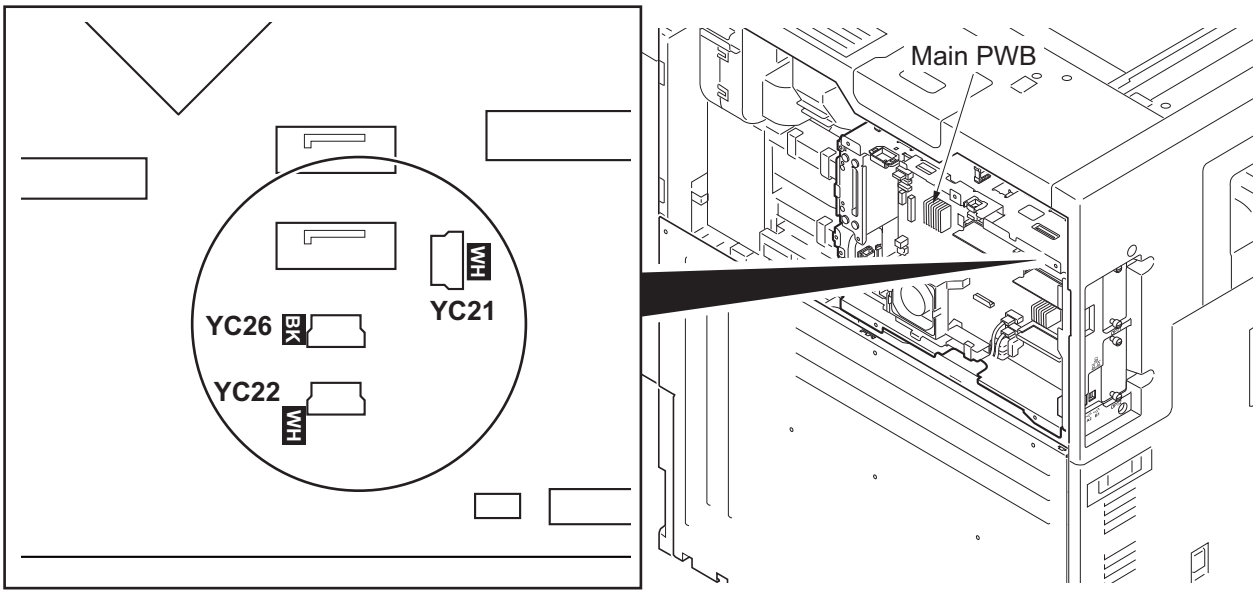

Figure 1-5-126

(3) Detaching and refitting the engine PWB

Procedure

1. Remove the controller box (see page 1-5-72).
2. Remove twenty four connectors of following from the engine PWB.
   YC1, YC2, YC3, YC4(Connector type FFC), YC5(Connector type FFC)
   YC6(Connector type FFC), YC7(Connector type FFC),
   YC10(Connector type FFC), YC26, YC9, YC8, YC46(Connector type FFC)
   YC47(FFC connector with a lock), YC11(Connector type FFC)*1
   YC12(Connector type FFC), YC15, YC16, YC18, YC17, YC19, YC20, YC21, YC22, YC45
   *1:except 30 ppm model

*: To remove the FFC from the locked connector YC47, unlock the connector by pressing the lock lever at the triangular mark.
To insert an FCC cable, hold it at both ends and insert it all the way in.

*: Before removing the connector type FFCs of YC4-7 and YC10-12, unlock the lock by pressing the lock lever in its center.

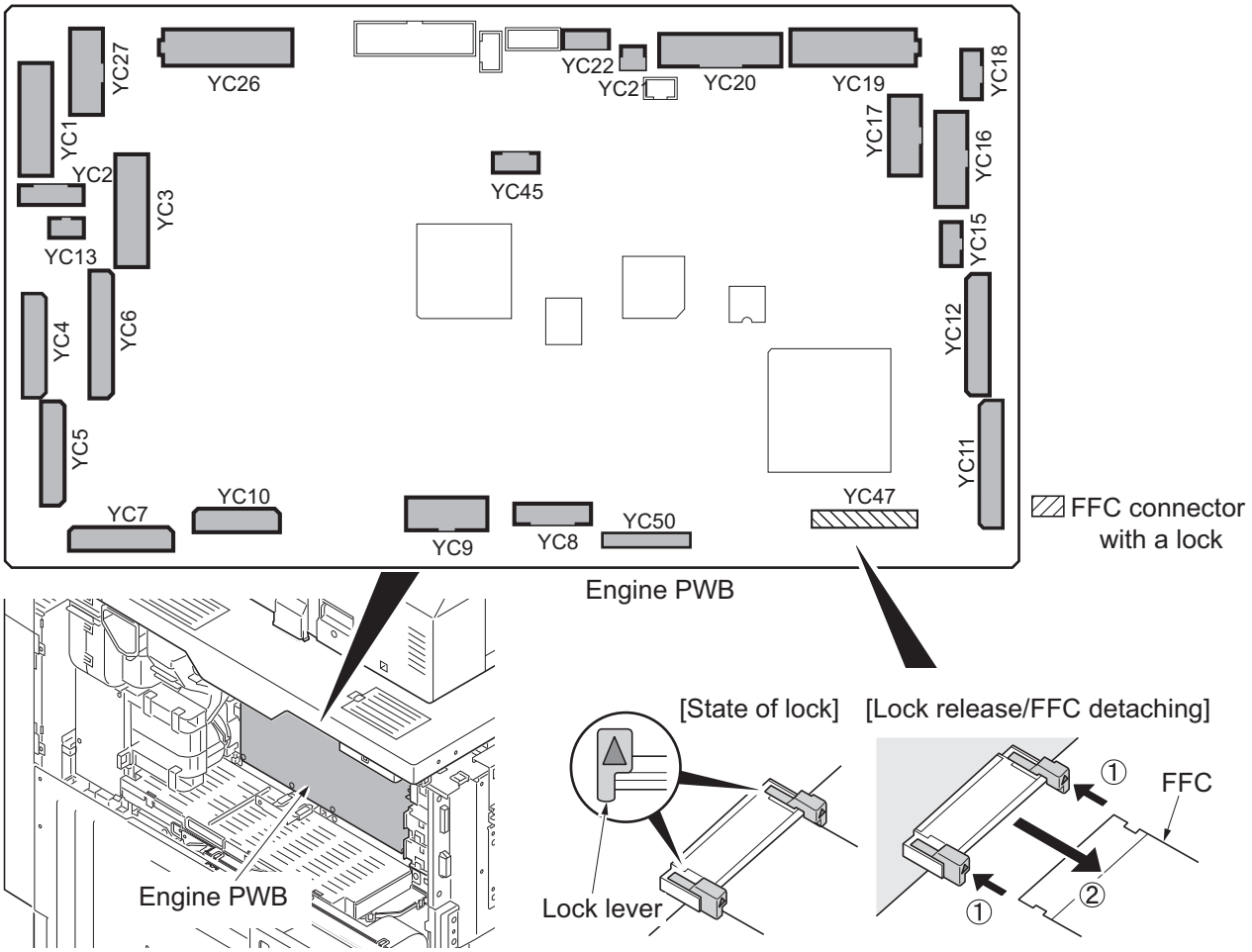

Figure 1-5-127

3. Remove six screws.
4. Remove the engine PWB.
5. Check or replace the engine PWB and refit all the removed parts.

*: When replacing the engine PWB, remove the EEPROM (U100) from the engine PWB and then reattach it to the new engine PWB.

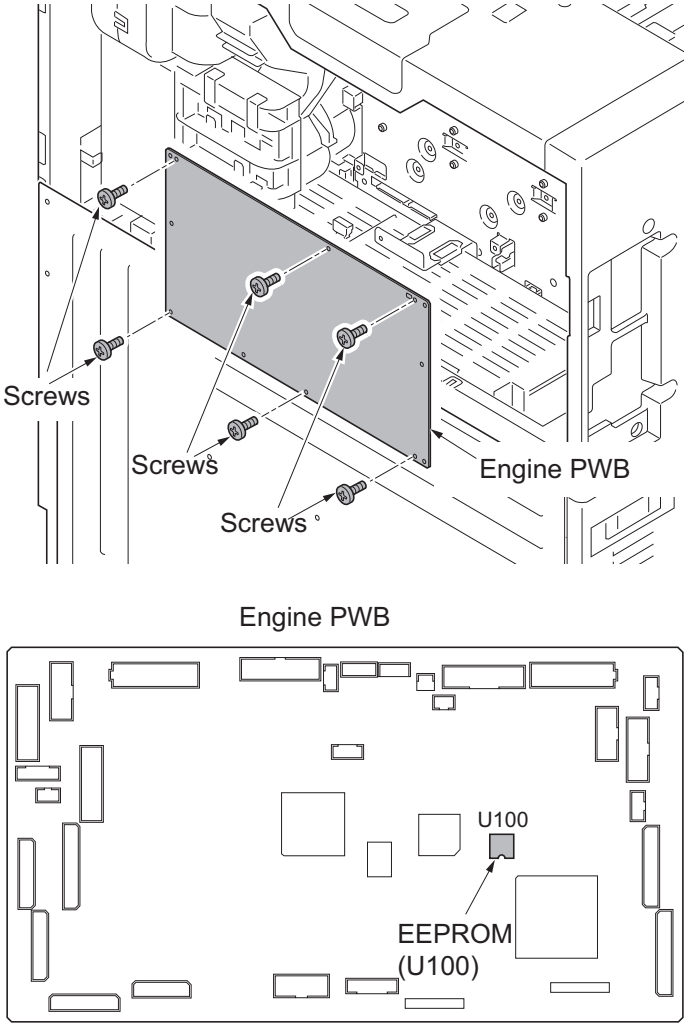

Figure 1-5-128

(4) Remarks on engine PWB replacement

When replacing the engine PWB, remove the EEPROM (U100) from the engine PWB that has been removed and then reattach it to the new engine PWB.

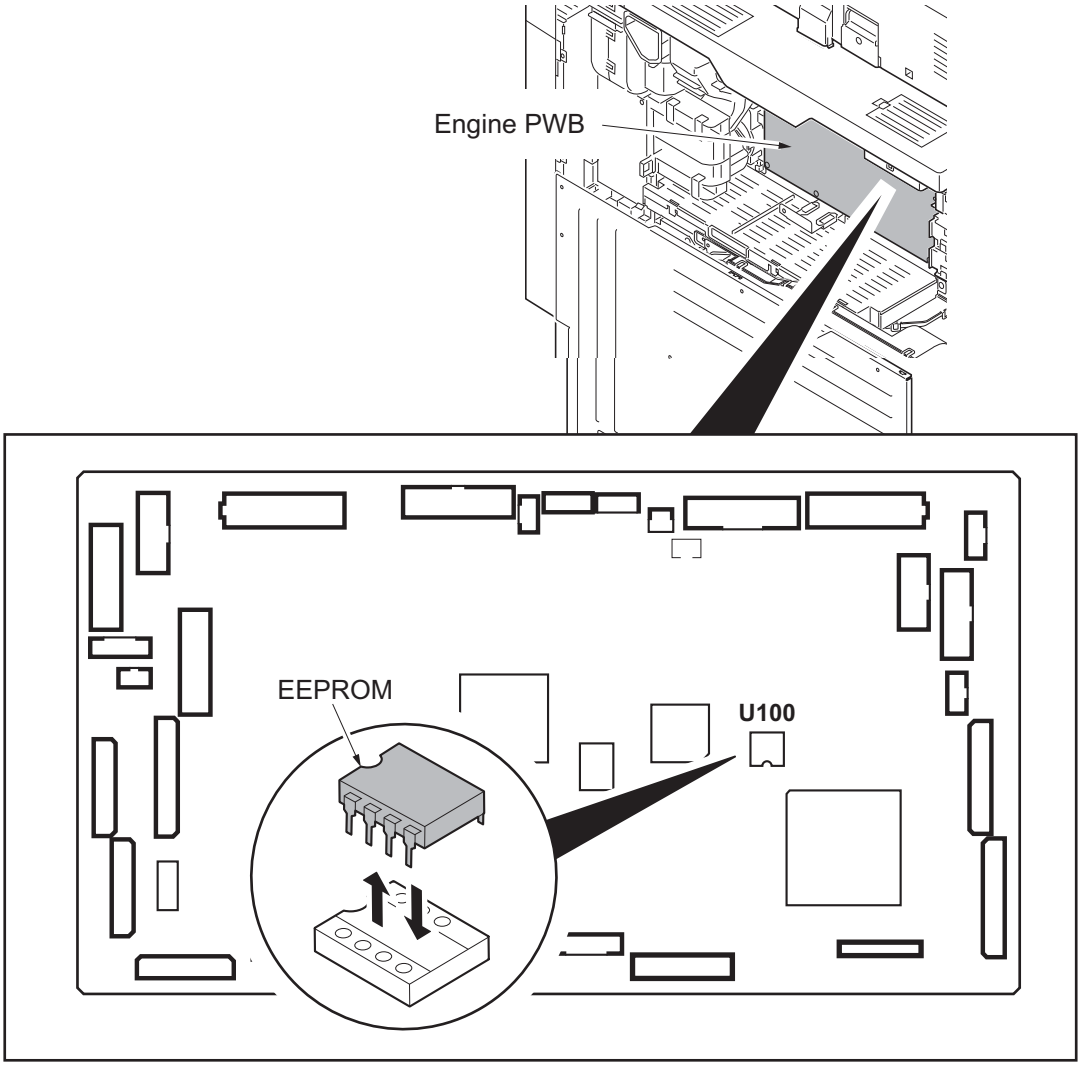

Figure 1-5-129

(5) Error symptom at an erroneous insertion of the engine PWB FFC

If an FFC is inserted improperly, the following symptom could be observed:

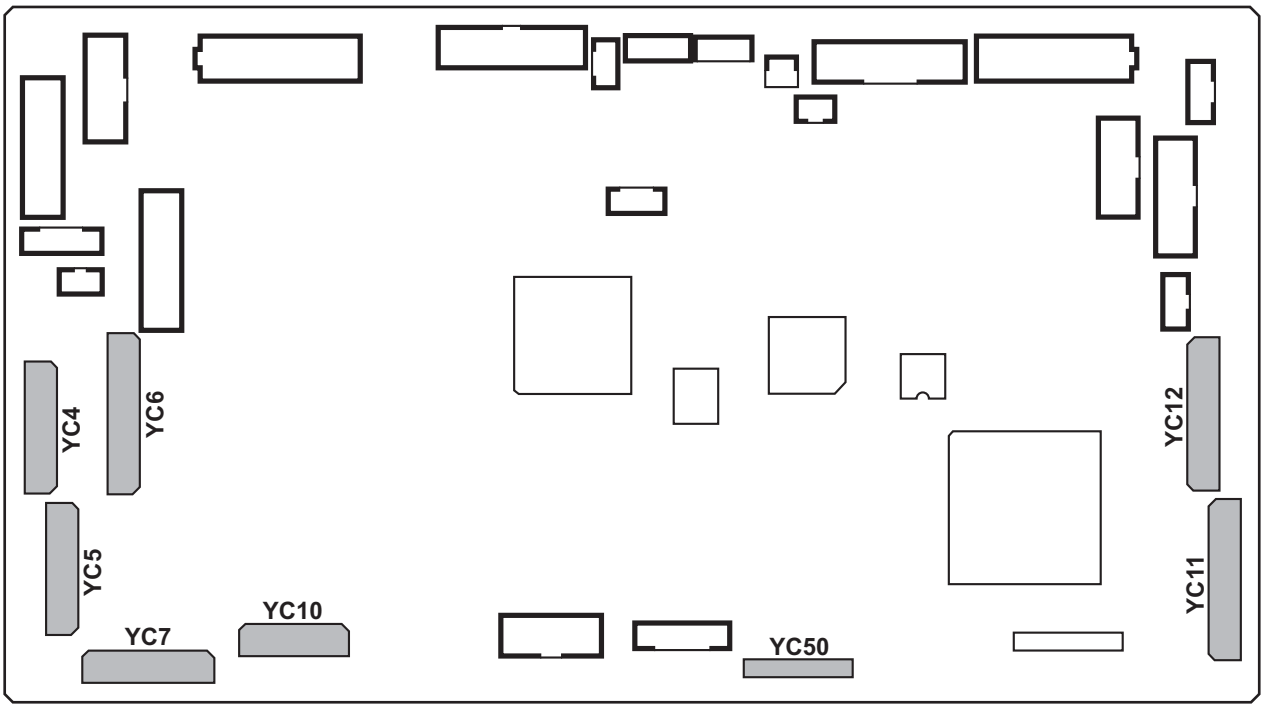

Figure 1-5-130

Engine PWB	Connect PWB	Occurrence	
		30 ppm / 35 ppm model	45ppm / 55 ppm model
YC6	FEED1	[System error] (C0980) [Machine failure] (C6950) [The cover is open] (right cover1)	[System error] (C0980) [Machine failure] (C6950) [The cover is open] (right cover1)
YC5	FEED1	[Machine failure] (C6940,C2760)	[Machine failure] (C6940)
YC4	FEED2	[Paper jam] (JAM0000_02,03,10,15)	[Paper jam] (JAM0000_02,03,10,15)
YC7	FRONT	[Machine failure] (C6920) [Check the waste toner box]	[Machine failure] C6920)
YC10	FRONT	[Machine failure] (C7904)	[Machine failure] (C7904)
YC11	LSU	[System error] (C4101, C4104) [Machine failure] (C4101,C4104)	[System error] (C4101, C4102) [Machinefailure] (C4101,4102)
YC12	LSU	[Machine failure] (C4004,C4003)	[Machine failure] (C4001,C4004) [System error](4104)
YC46	Main	[System error] (F040)	[System error] (F040) [System error] (F186) [Paper jam] (JAM4201_17) →unusual image

Note that the attention is required when disassembling the FFC cable of the printing system relay board.

1. When removing the FFC cable from the locked connector of the printing system relay board, unlock the connector by pressing the lock lever at the triangular mark. Accordingly, remove straight the FFC cable without bending its root.

2. When inserting the FCC cable, hold it at both ends and insert it straight till the FFC cable stops (locked).

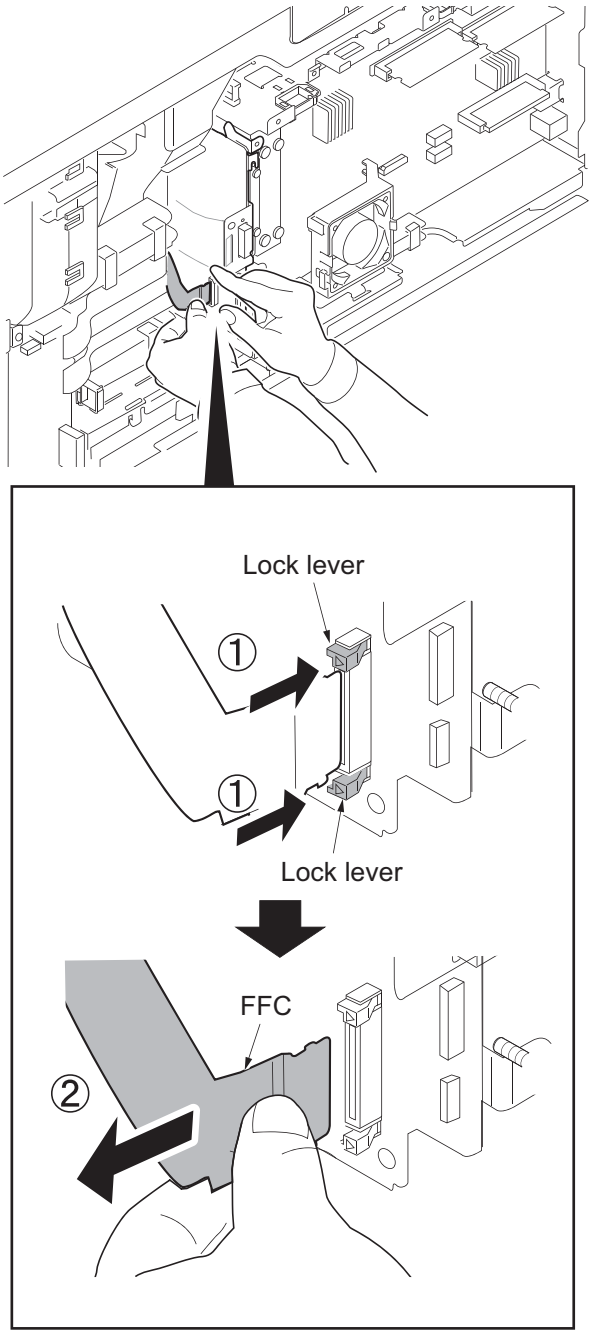

Figure 1-5-131

(6) Detaching and refitting the power source PWB

Procedure

1. Remove the rear lower cover (see page 1-5-96).
2. Release three wire saddles.
3. Remove three connectors.

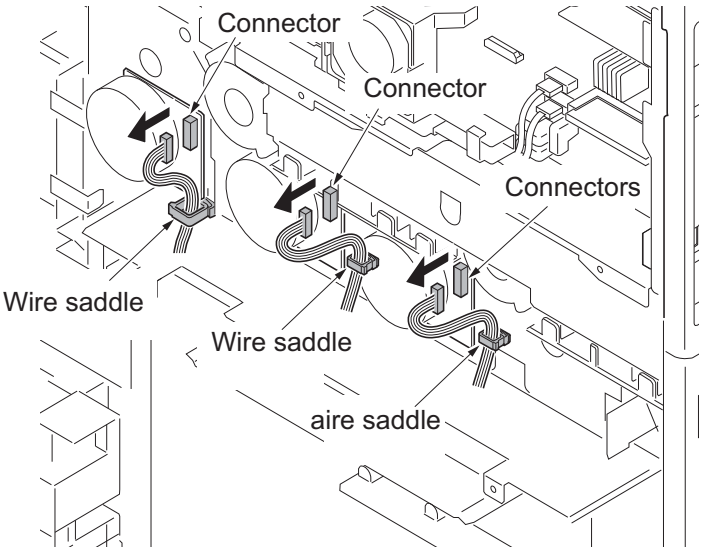

Figure 1-5-132

4. Release six wire saddles.
5. Remove the following eleven connectors and three tabs from the power source PWB.
   YC3
   YC1
   TB1
   TB2
   TB5
   YC8
   YC9
   YC17
   YC14
   YC12
   YC16
   YC13
   YC10
   YC11
6. Remove 2-pin relay connector.

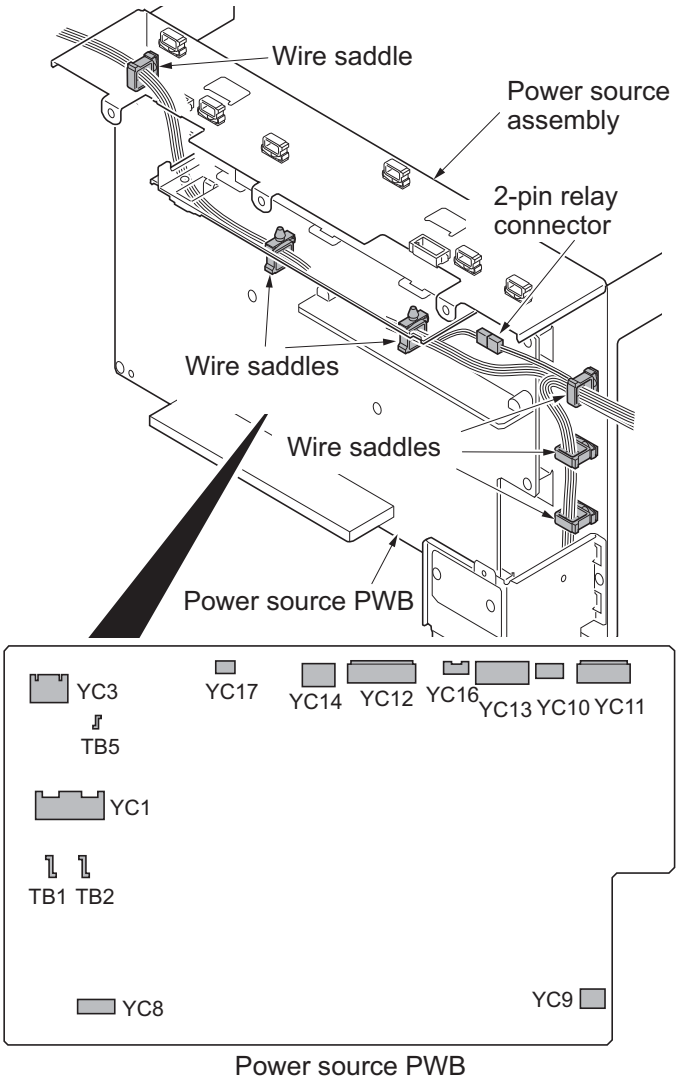

Figure 1-5-133

7. Remove the connector from the coin vender plate.

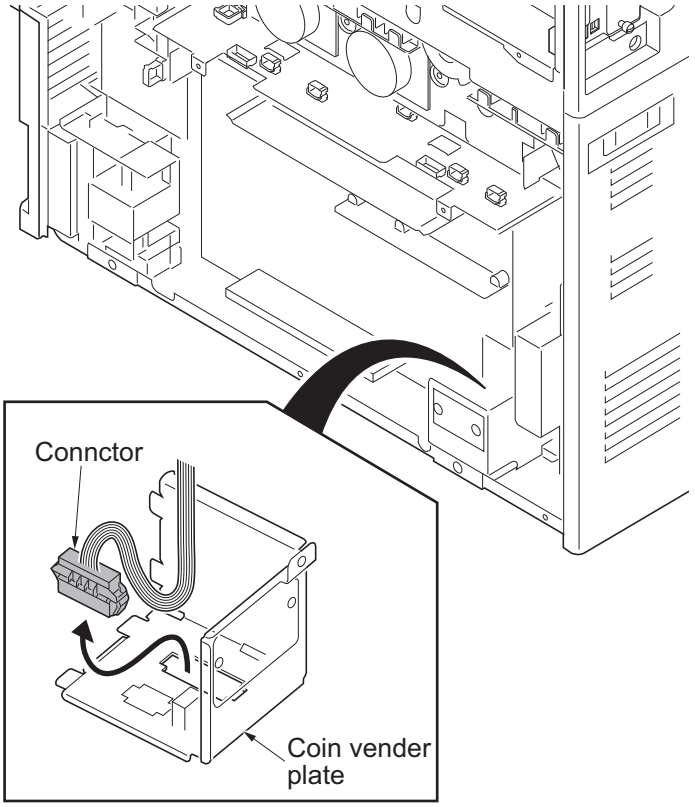

Figure 1-5-134

8. Remove screw.
9. Remove cooling duct1.
   *For 45 ppm/55 ppm model only
10. Remove two screws.
11. Remove the power source assembly.

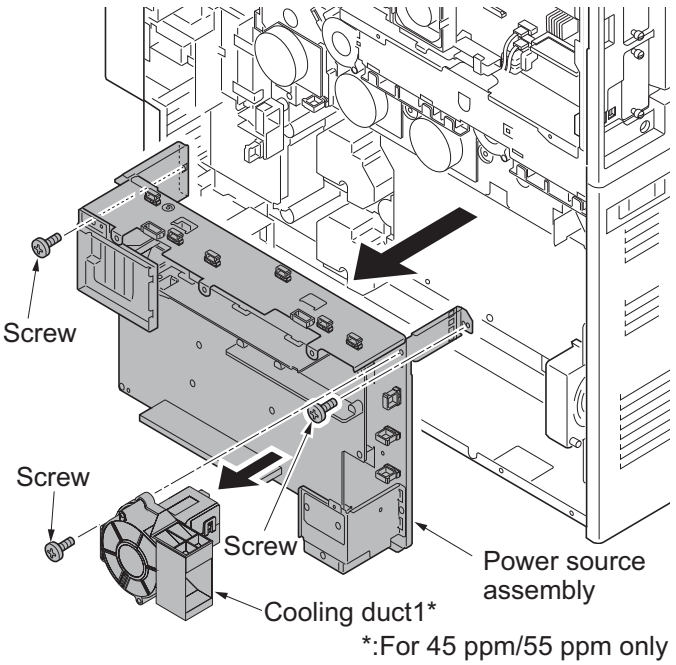

Figure 1-5-135

12. Release wire saddle.
13. Remove 2-pin relay connector.
14. Remove screw.
15. Remove cooling duct2.
16. Remove eight screws.
17. Remove the power source PWB.
18. Check or replace the power source PWB and refit all the removed parts.

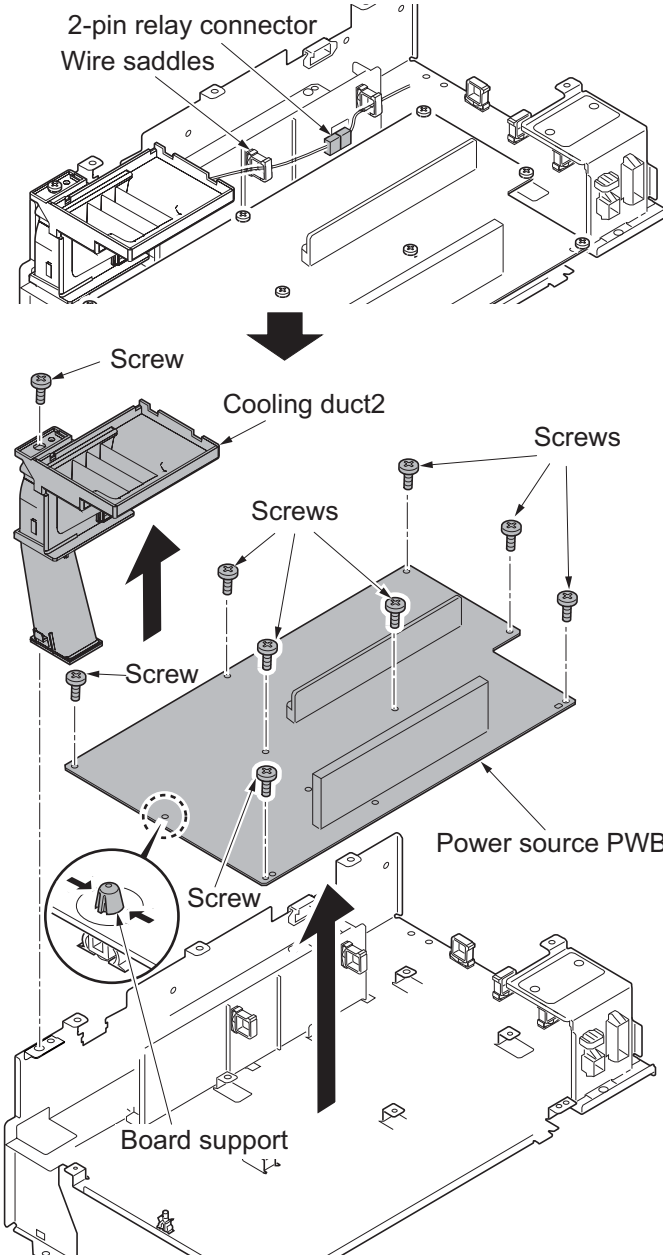

Figure 1-5-136

(7) Detaching and refitting the high voltage PWB 1

Procedure

1. Remove the power source PWB (see page 1-5-85).
2. Remove the main drive unit (see page 1-5-106).
3. Remove five connectors from high voltage PWB.

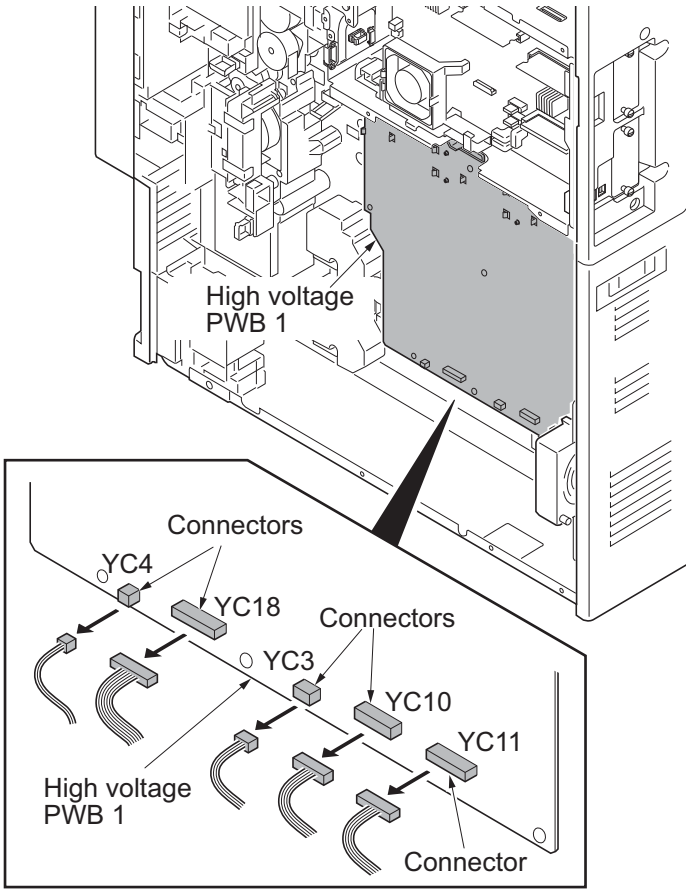

Figure 1-5-137

4. Remove eight screws.
5. Unhook two hooks of PWB spacer and then remove the high voltage PWB 1.
6. Check or replace the high voltage PWB 1 and refit all the removed parts.

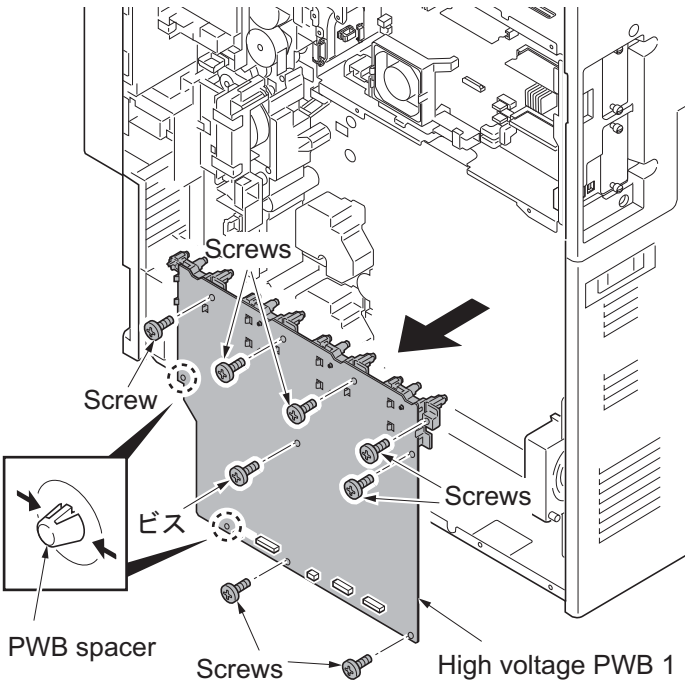

Figure 1-5-138

(8) Detaching and refitting the high voltage PWB 2

Procedure

1. Remove the main drive unit (see page 1-5-106).
2. Pull the transfer belt unit out a little (see page 1-5-62).
3. Remove two connectors from the high voltage PWB 2 assembly.

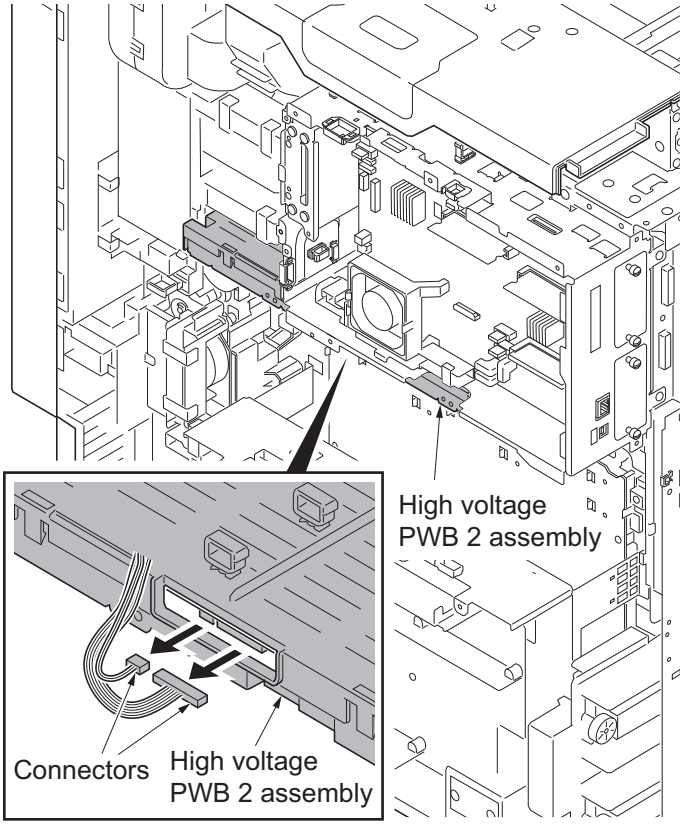

Figure 1-5-139

4. Remove two screws.
5. Unhook two hooks and then remove the high voltage PWB 2.
6. Check or replace the high voltage PWB 2 and refit all the removed parts.

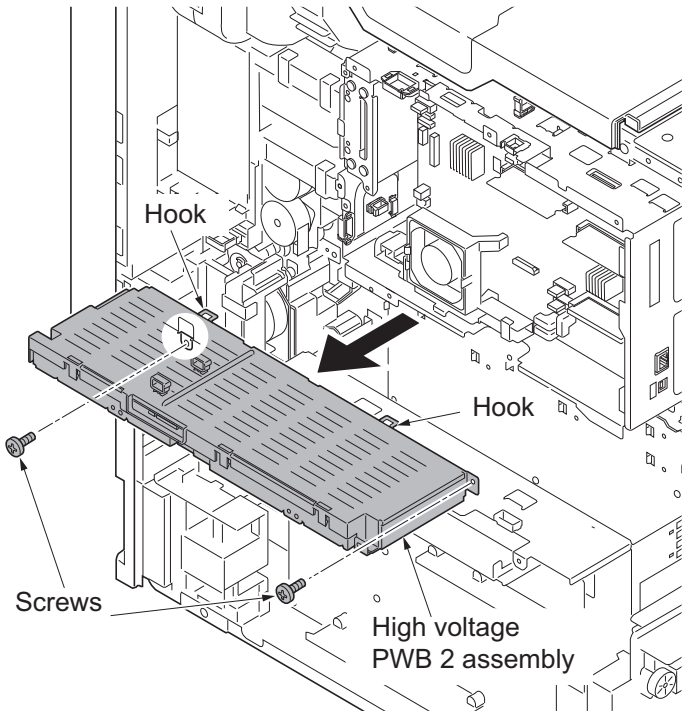

Figure 1-5-140

(9) Detaching and refitting the operation PWB

Procedure

1. Remove the original cover or the document processor.
2. Remove two screws and then remove the ISU front cover.
3. Remove two screws and then remove the ISU right cover.

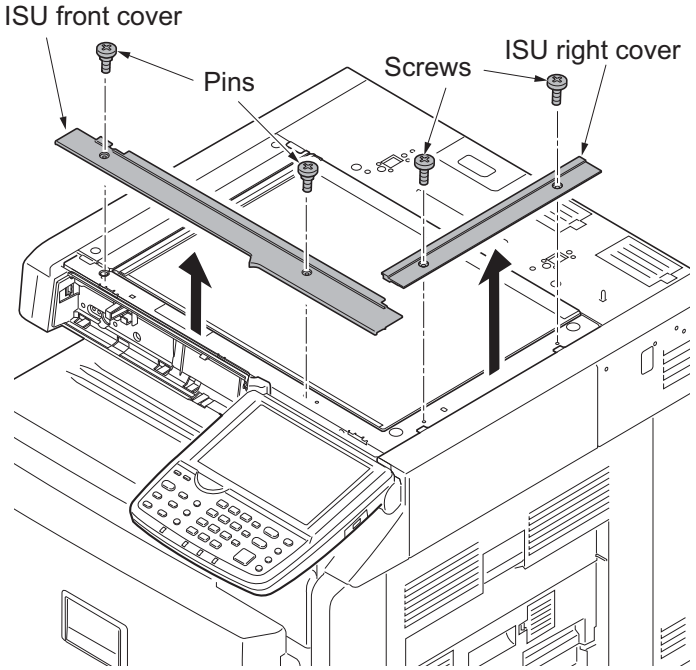

Figure 1-5-141

4. Pull the paper conveying unit out.
5. Remove the screw and five hooks and then remove the right upper cover.
   *:Unlatch the stoppers with the rear bottom one first.

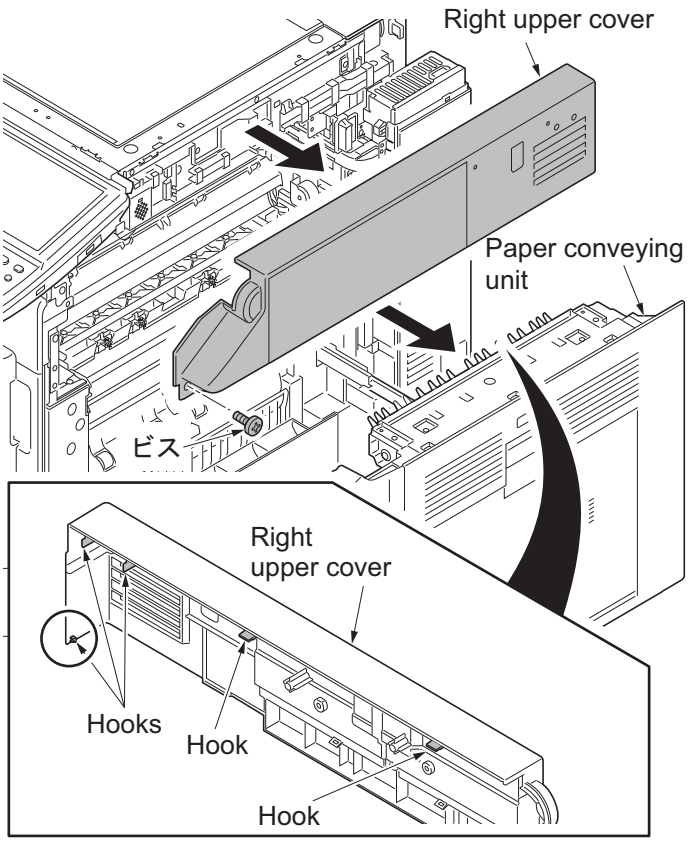

Figure 1-5-142

6. Remove the screw and then remove the operation panel cover.

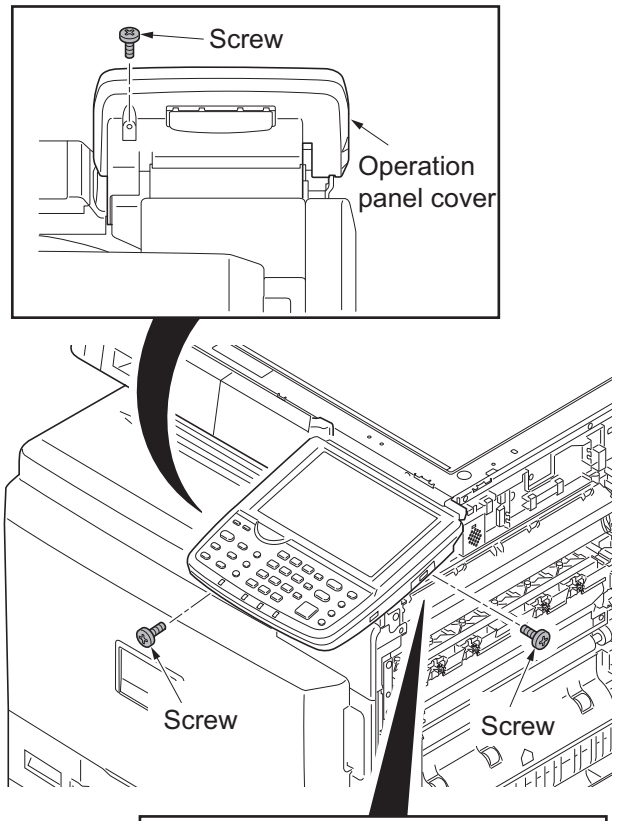

Figure 1-5-143

7. Remove two screws and then remove the USB wire (connector).

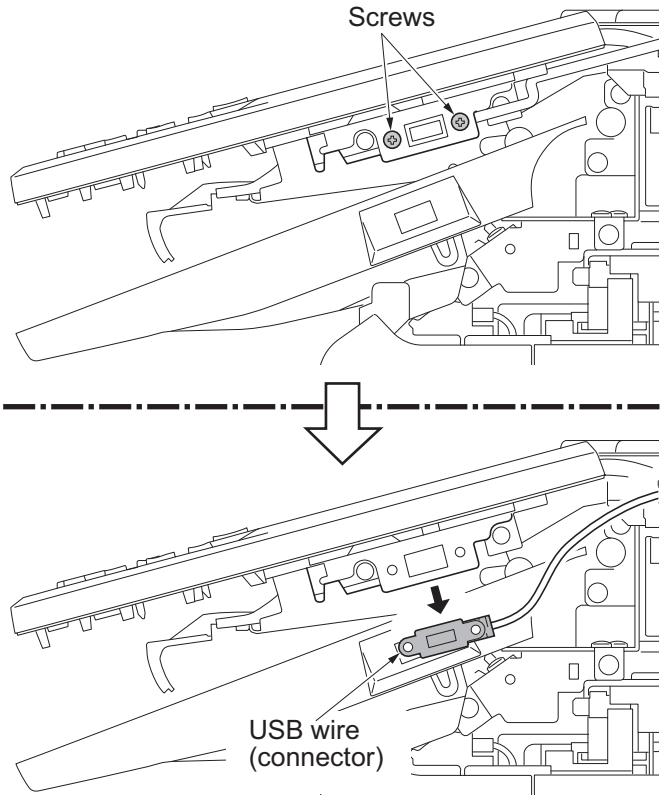

Figure 1-5-144

8. Remove four screws.

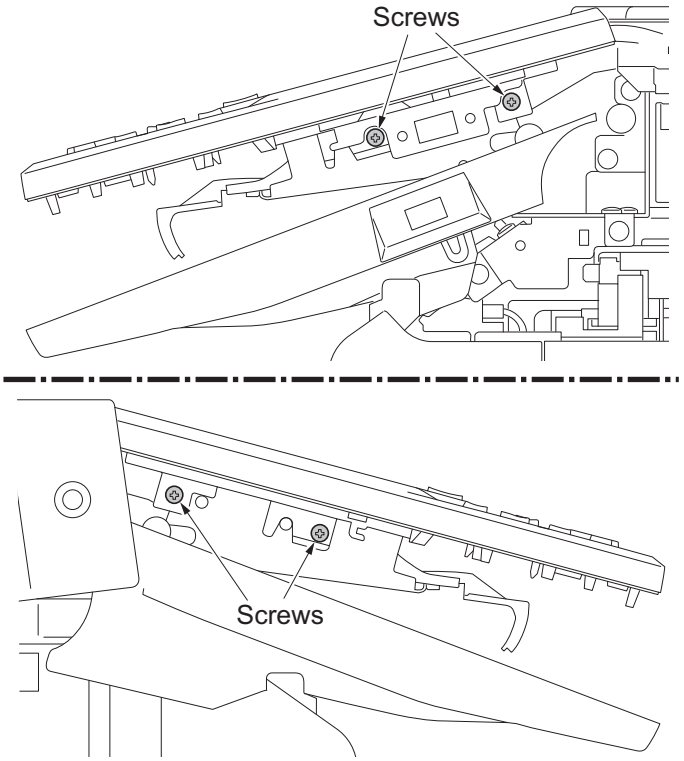

Figure 1-5-145

9. Pull the operation panel unit upward.
10. Release three wire saddles.
11. Remove four connectors from the operation PWB.
12. Remove the operation panel unit.

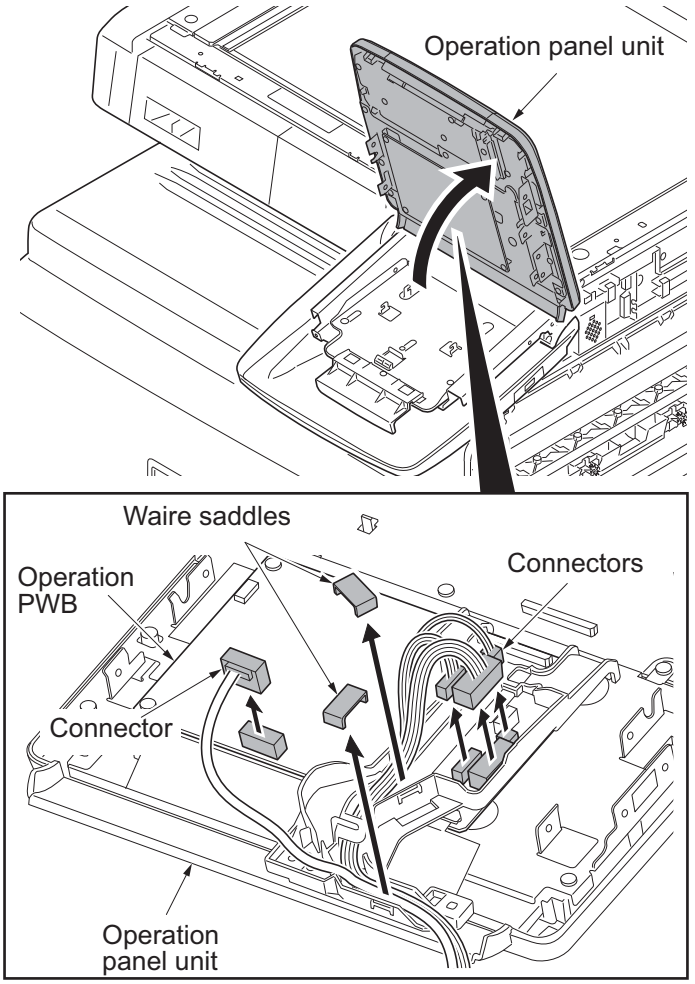

Figure 1-5-146

13. Remove two screws and then remove the wire guide.

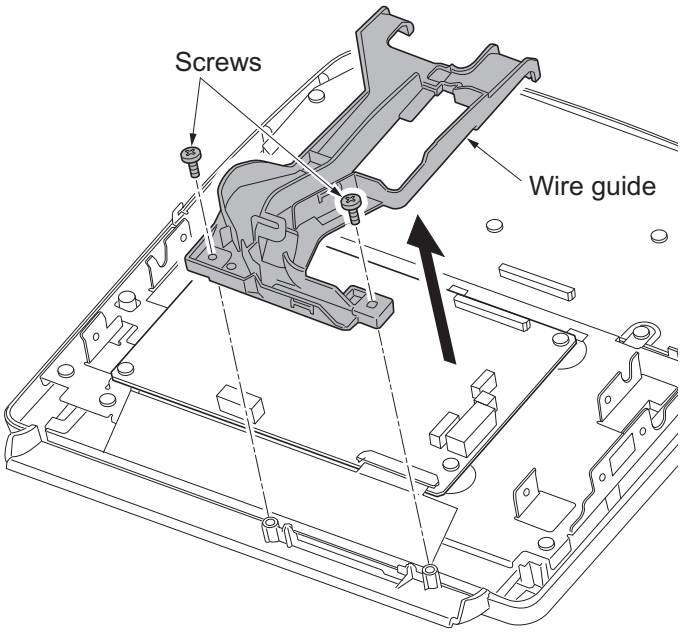

14. Remove the connectors, two FFC and the FPC from the operation PWB.

    *: To remove the FPC from the locked connector A, unlock the connector by raising the lock lever by 30 degrees. (FPC: Flexible printed circuits)
15. To remove the FFC from the locked connector B, unlock the connector by sliding the stopper.

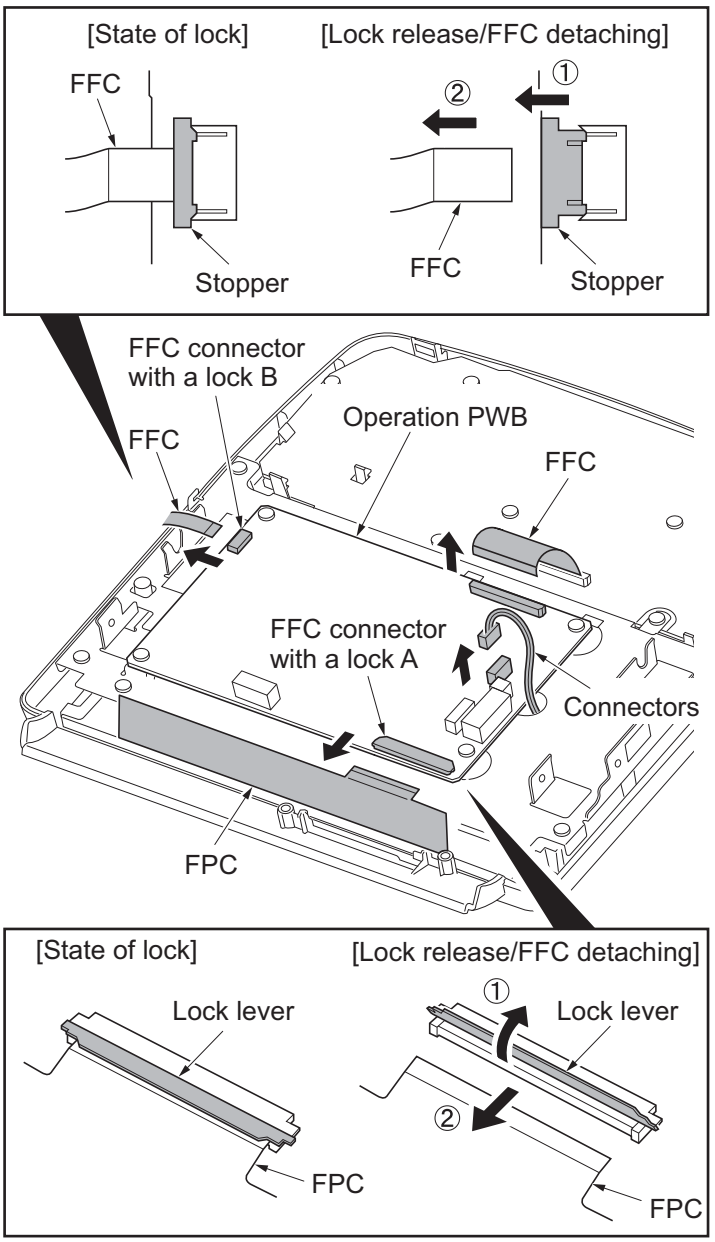

Figure 1-5-148

16. Remove six screws and then remove the operation PWB.
17. Check or replace the operation PWB and refit all the removed parts.

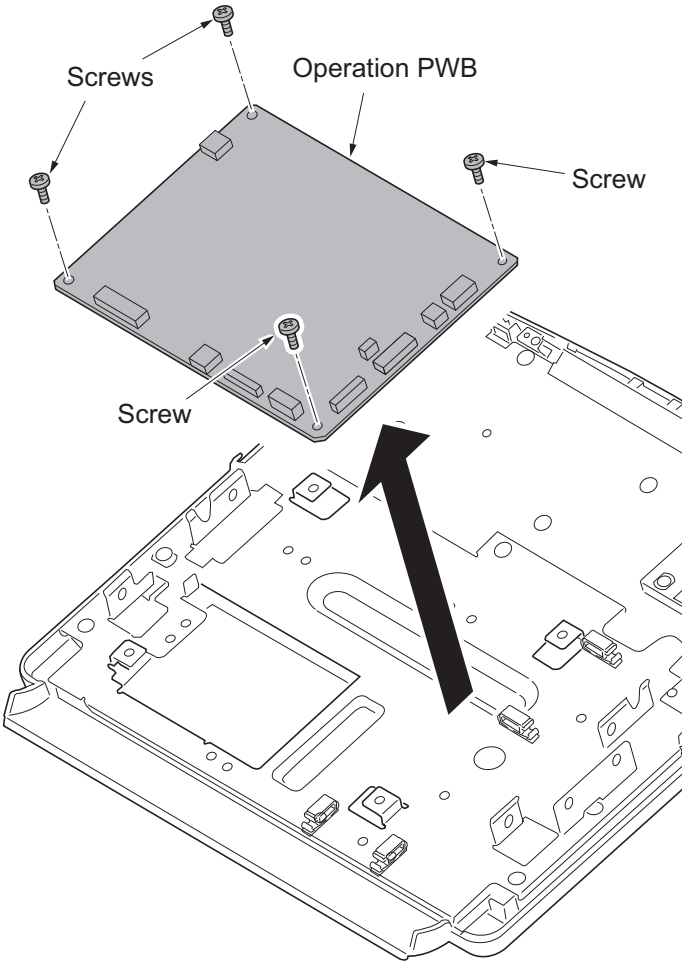

Figure 1-5-149

(10)Detaching and refitting the fuser IH PWB

Procedure

1. Remove nine screws and then remove the rear upper cover.

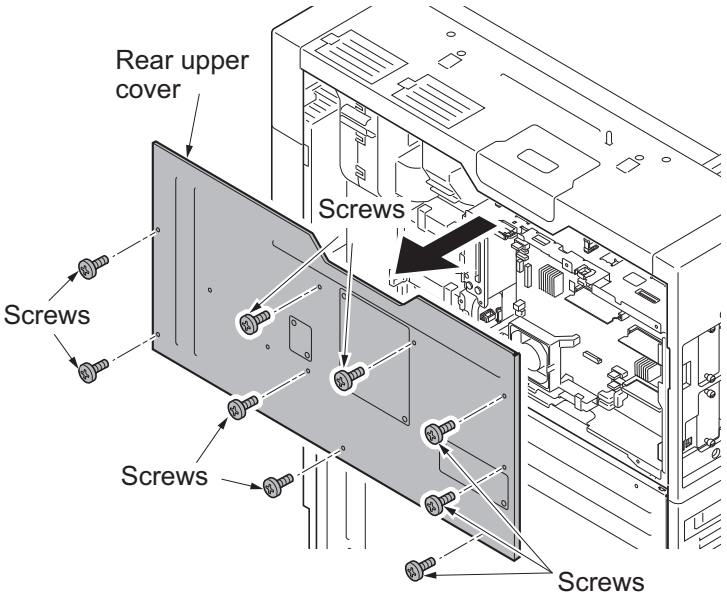

Figure 1-5-150

2. Remove nine screws.
3. Release two hanging parts and then remove the rear lower cover.
4. Remove the fuser unit (see page 1-5-68).

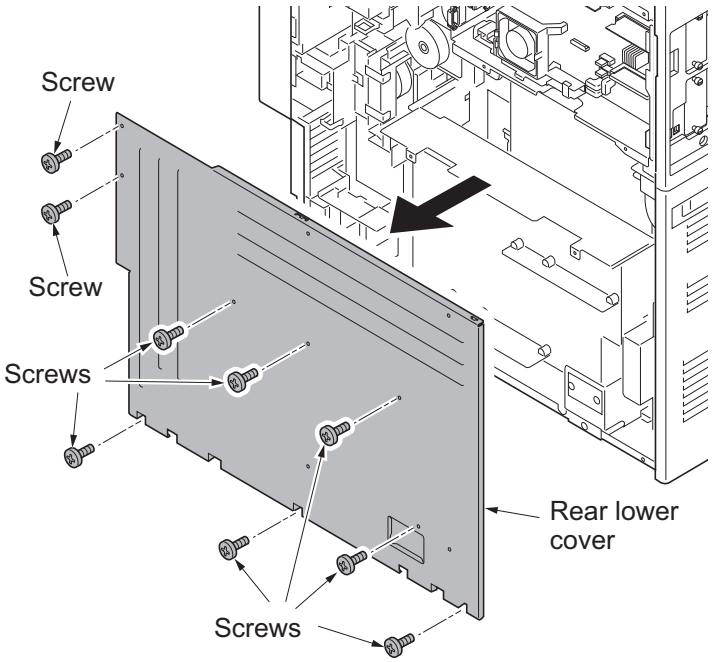

Figure 1-5-151

5. Remove two screws and then remove the ISU right cover.
6. Remove the screw and five hooks and then remove the right upper cover.

*: Unlatch the stoppers with the rear bottom one first.

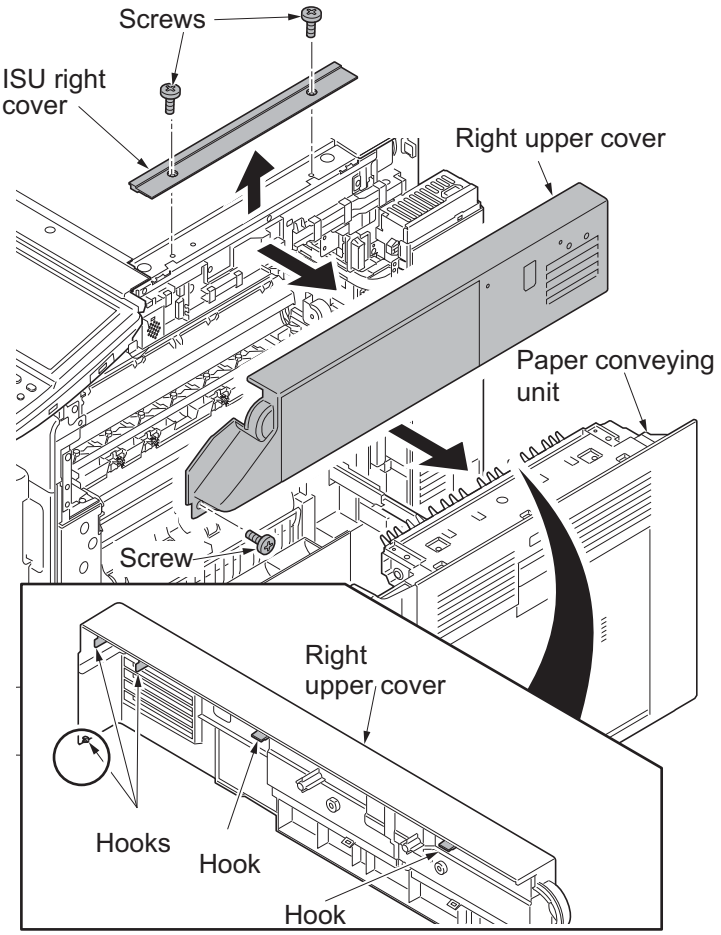

Figure 1-5-152

7. Remove the screw.
8. Unhook two hooks and then remove the right middle rear cover.

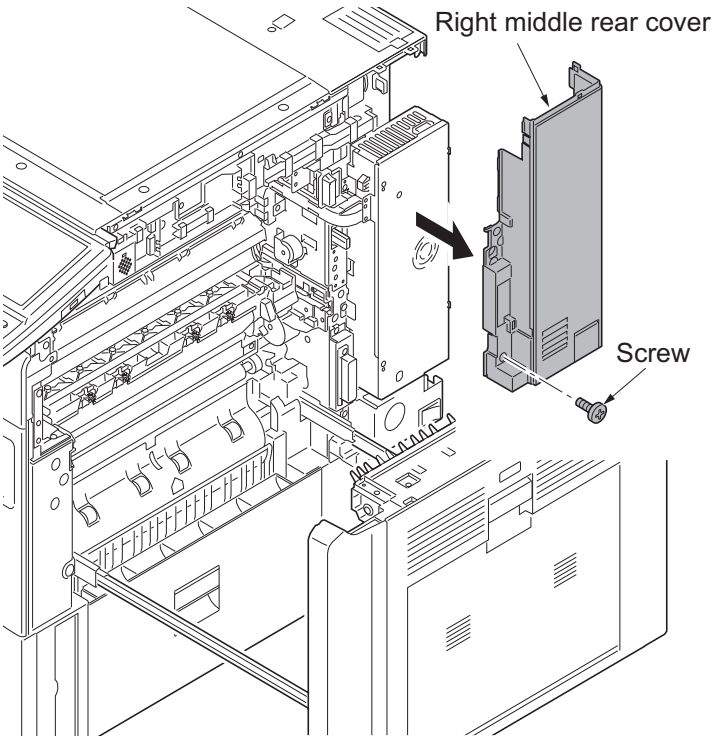

Figure 1-5-153

9. Remove four screws and the remove the fuser IH PWB cover.
10. Remove the IH electric wire cover.

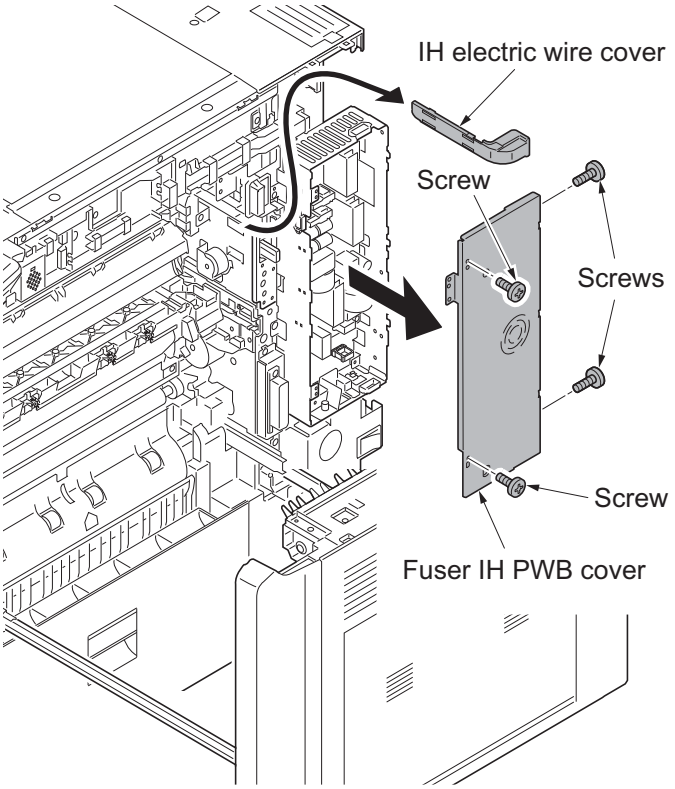

Figure 1-5-154

11. Release two wire saddles.
12. Remove four connectors from the fuser IH PWB.

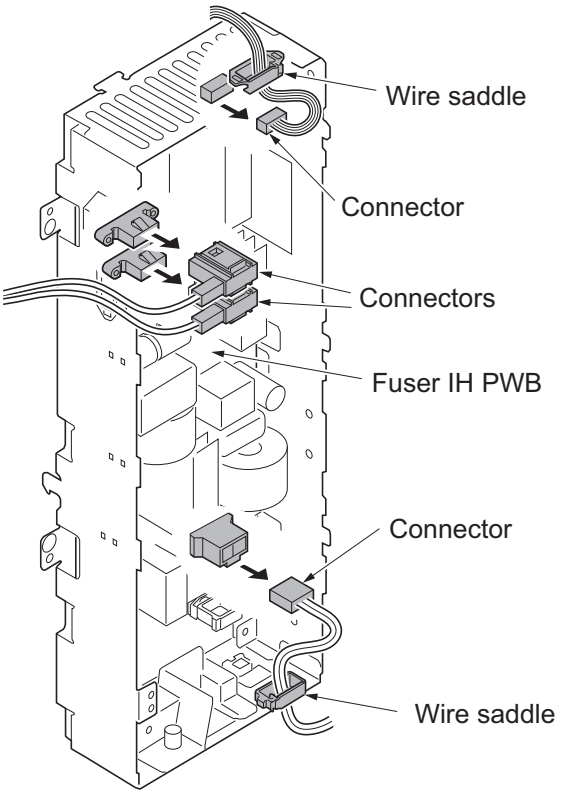

Figure 1-5-155

13. Remove two wire holders.
14. Remove the connector (YC27) from feed PWB 1.

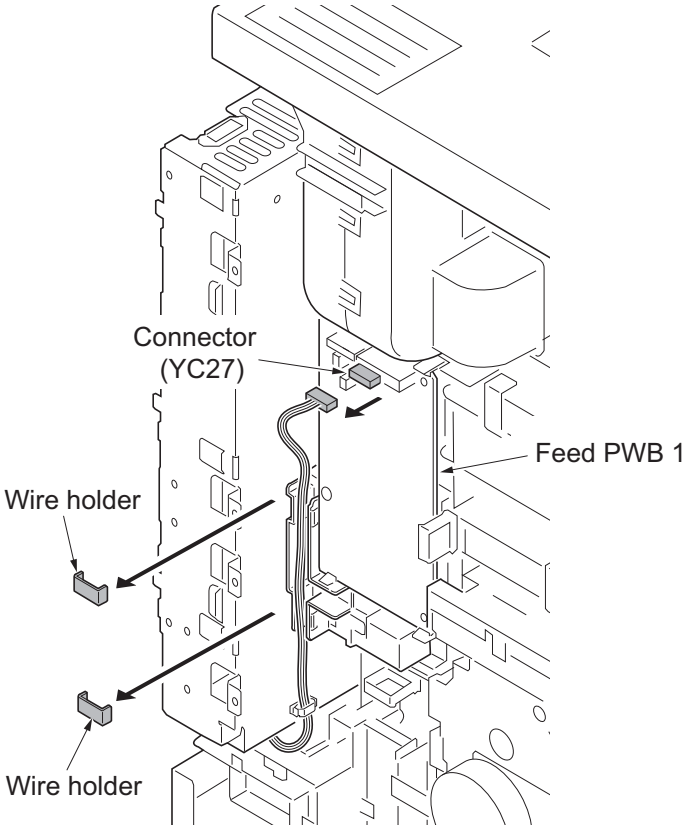

Figure 1-5-156

15. Remove three screws.
16. Unhook two hooks and then remove IH box assembly.

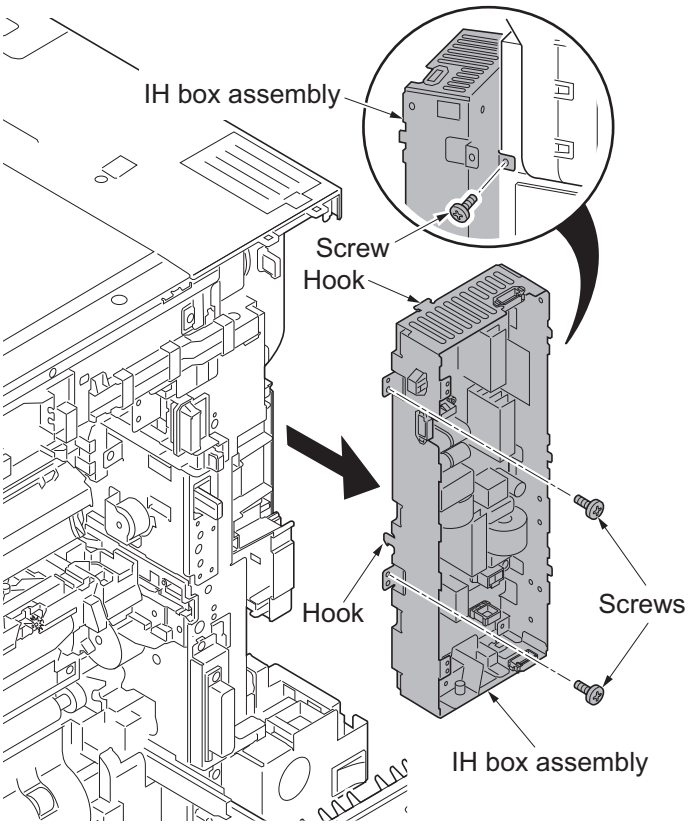

Figure 1-5-157

17. Remove two connectors.
18. Remove six screws.
19. Unhook the hook of the PWB spacer and then remove the fuser IH PWB.
20. Check or replace the fuser IH PWB and refit all the removed parts.

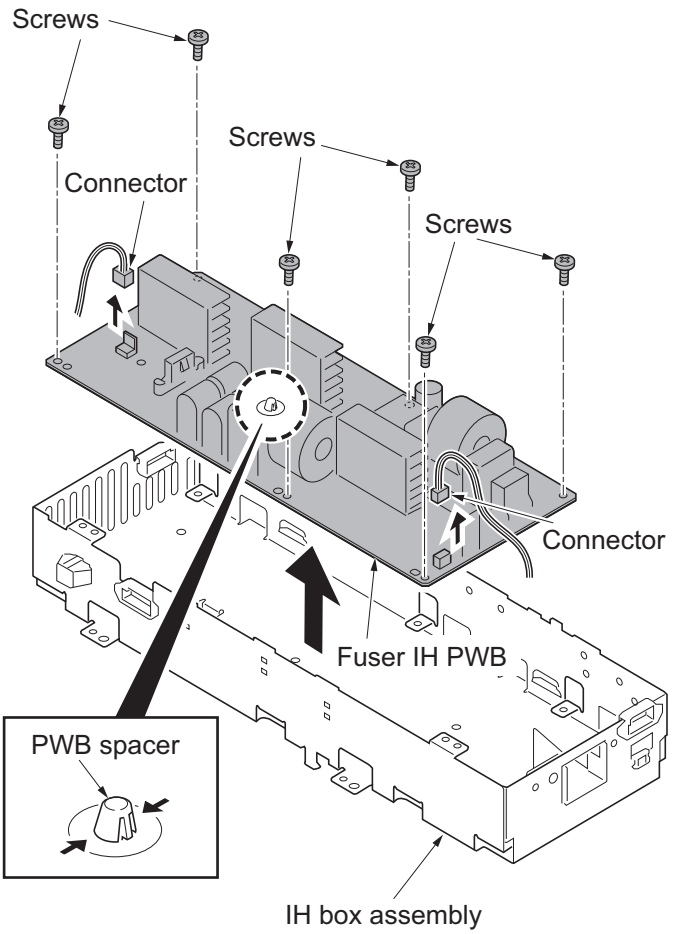

Figure 1-5-158

1-5-9 Drive section

(1) Detaching and refitting the drum drive unit K and the drum drive unit MCY

Procedure

Detaching the drum drive unit K

1. Remove the rear upper cover and the rear lower cover (see page 1-5-96).
2. Remove the connector.
3. Release the wire saddle.

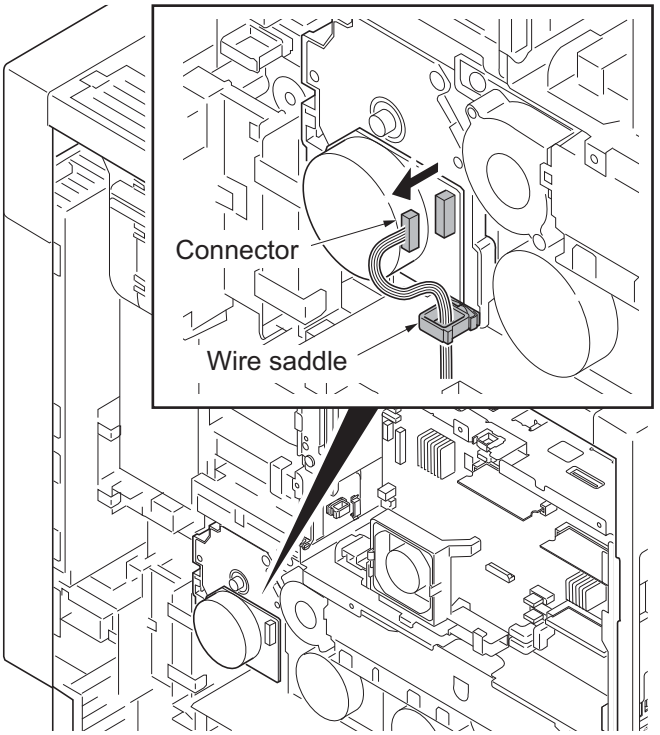

Figure 1-5-159

4. Remove three screws.
5. Remove the drum drive unit K.

*: Do not have a shaft part alone when you carry drum drive unit K. (Have the housing.)

*: Put support on the tip of the shaft so that the shaft may become the horizontal when you put drum drive unit K on the table etc.

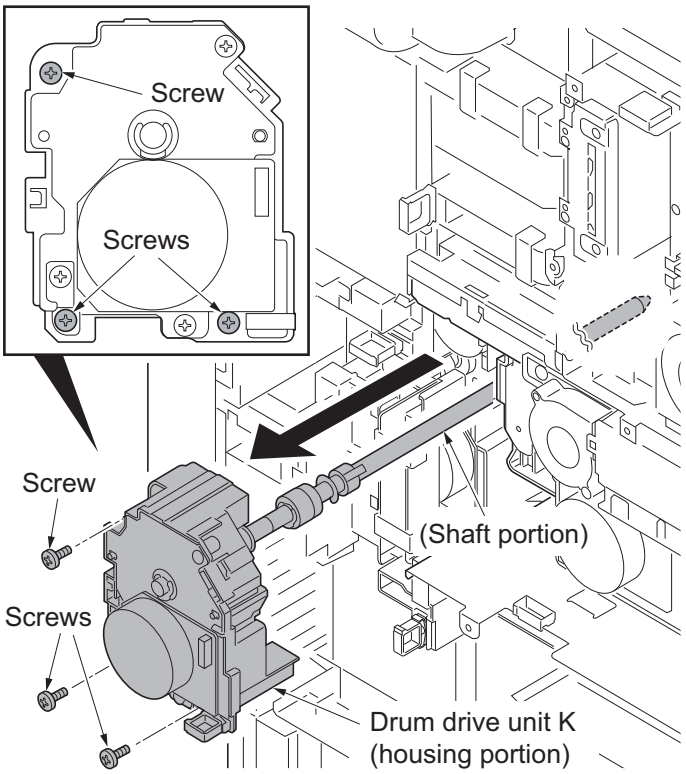

Figure 1-5-160

Detaching the drum motor K

1. Remove the rear upper cover and the rear lower cover (see page 1-5-96).
2. Remove the connector.
3. Release the wire saddle.

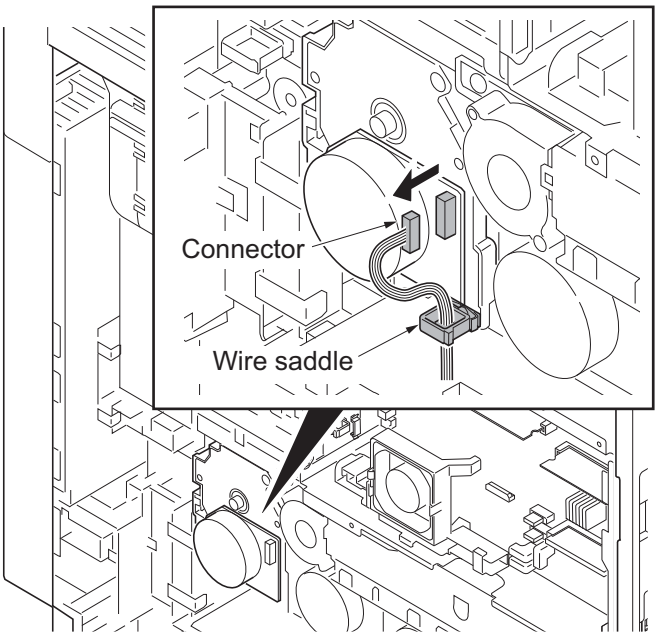

Figure 1-5-161

4. Remove three screws.
5. Remove the drum motor unit K.

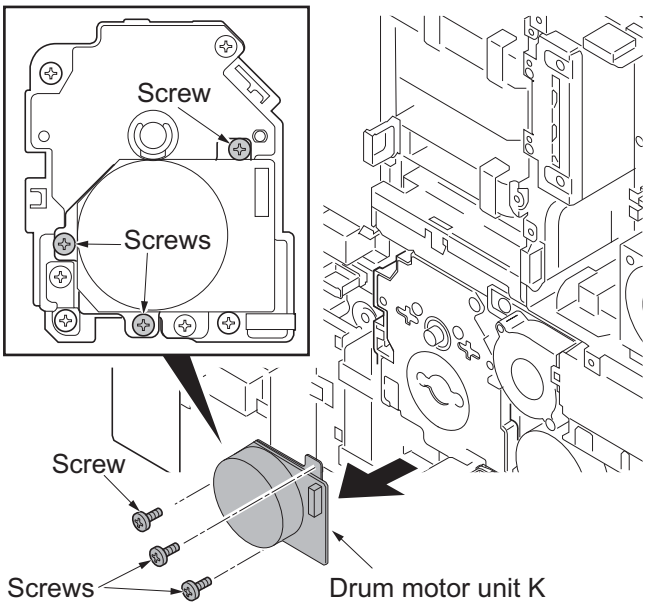

Figure 1-5-162

6. Remove two screws.
7. Remove the drive mounting bracket K.

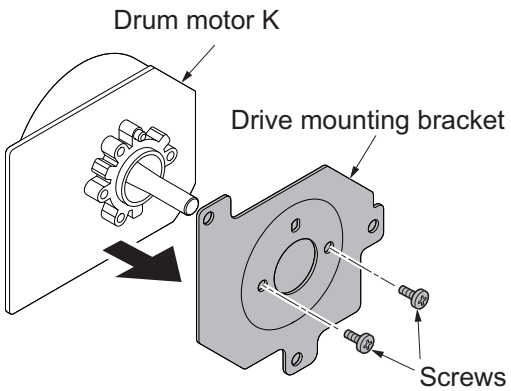

Figure 1-5-163

Detaching the drum drive unit MCY

f

Steps 1 through 5 are for 45 and 55 ppm models.

For 30 and 35 ppm models, proceed to step 6.

1. Remove the left upper cover (see page 1-5-72).
2. Remove the left cover (see page 1-5-43).
3. Remove the connector.
4. Remove the screw.

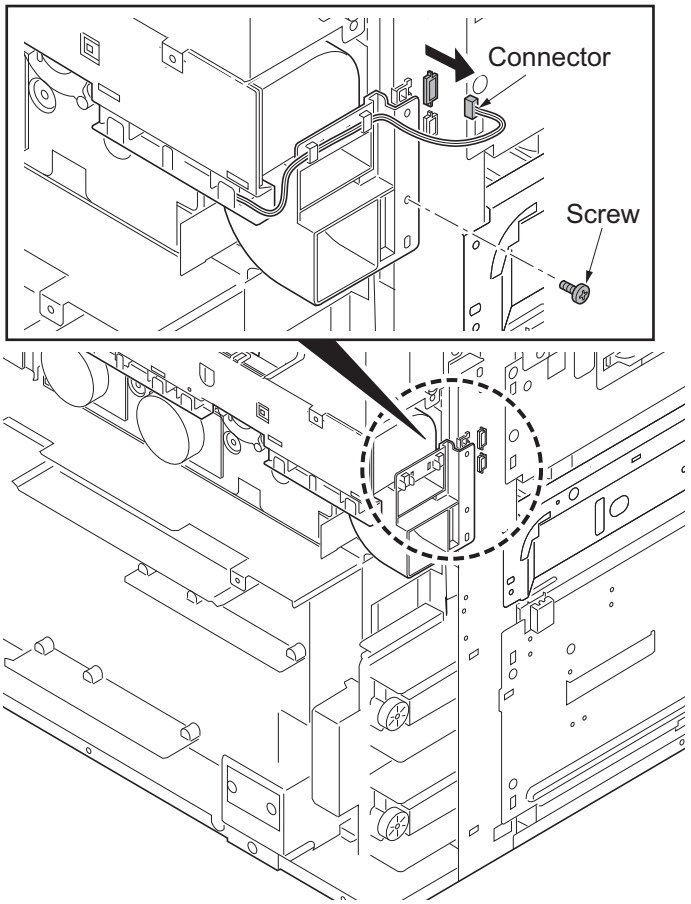

Figure 1-5-164

5. Remove as one body the toner unit duct, the toner fan motor 1 and the toner fan motor 2.

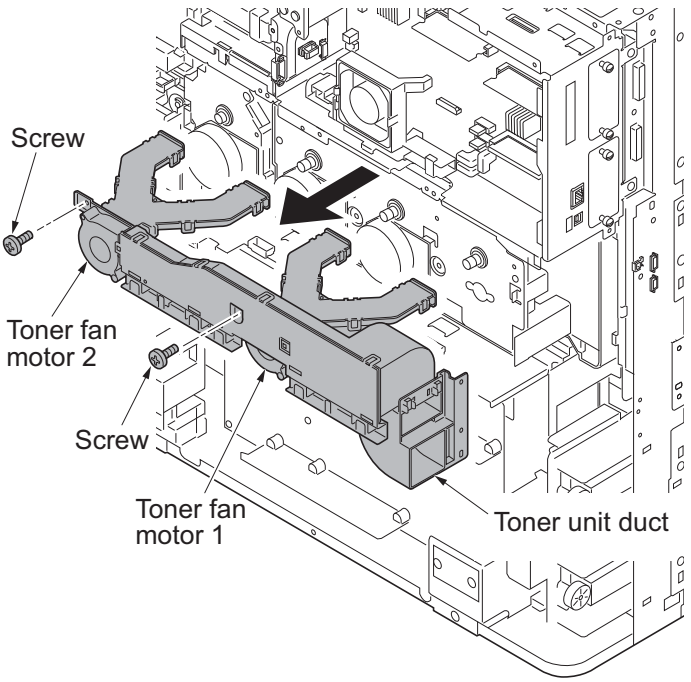

Figure 1-5-165

6. Release wire saddles.
   30ppm model/35ppm model: 1
   45ppm model/55ppm model: 2
7. Remove connectors.
   30ppm model/35ppm model: 1
   45ppm model/55ppm model: 3

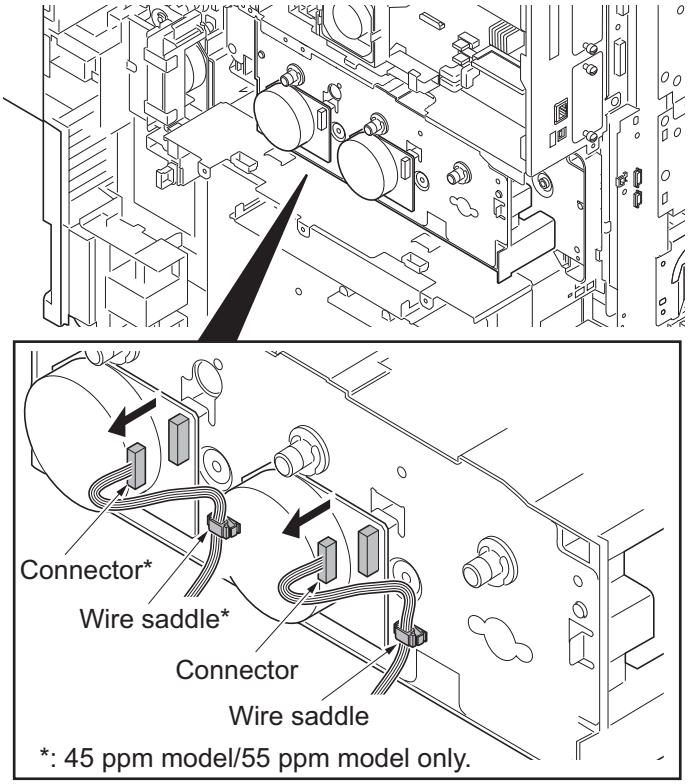

Figure 1-5-166

8. Remove five screws and then remove the drum drive unit MCY.
*: Do not have a shaft part alone when you carry drum drive unit MCY. (Have the housing.)
*: Put support on the tip of the shaft so that the shaft may become the horizontal when you put drum drive unit MCY on the table etc.
9. Check or replace the drum drive unit K and the drum drive unit MCY and refit all the removed parts.

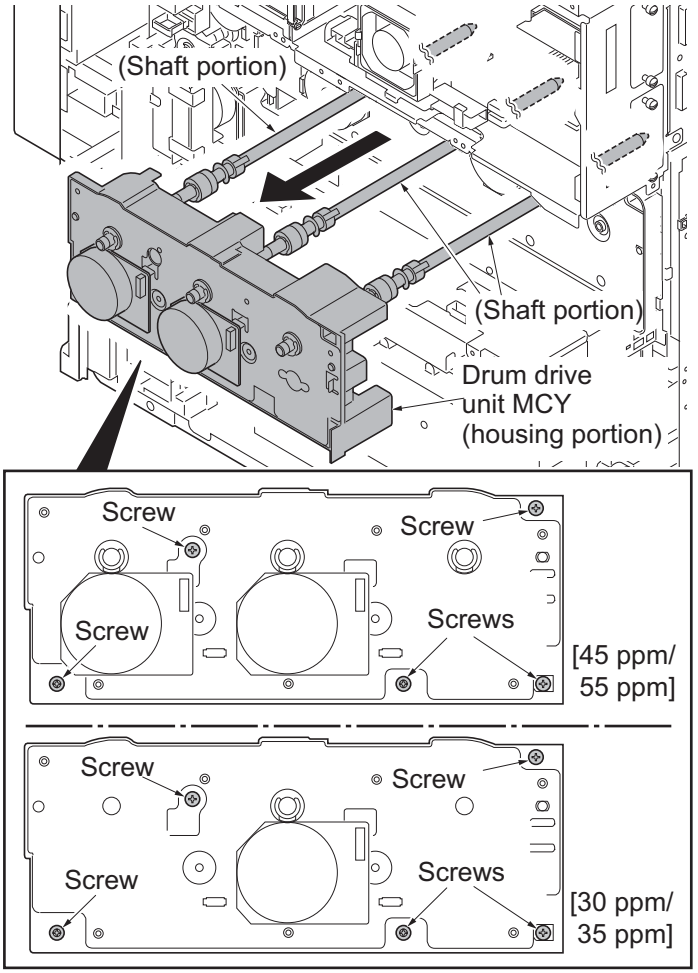

Figure 1-5-167

Detaching the drum motor MCY

Perform steps 1 through 5 of removing the drum drive unit MCY.

10. Release the wire saddle of the motor to remove. (See page -1-5-104.)
    *: For the drum moros M, C, and MCY only.
11. Remove the connector from the motor to remove.

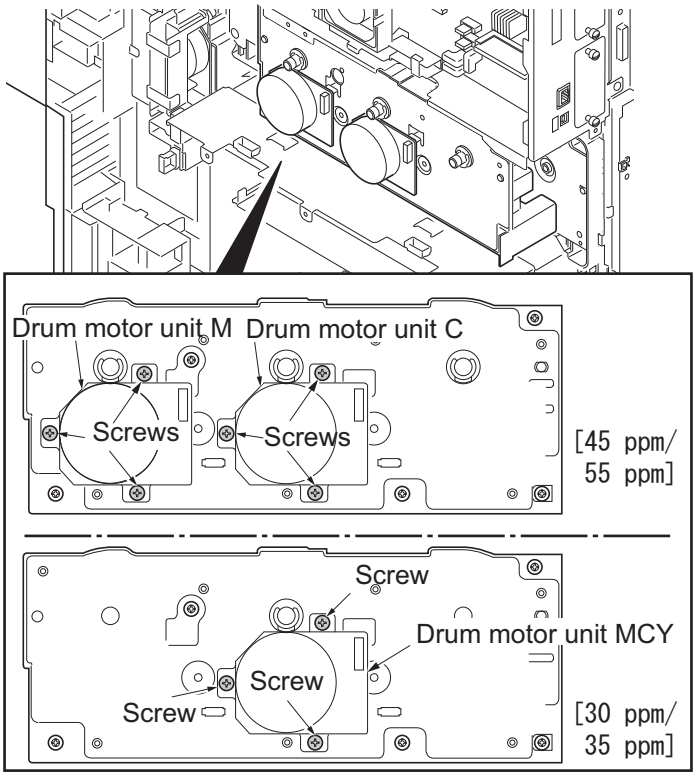

Figure 1-5-168

12. Remove three screws
13. Remove the drum motor unit.

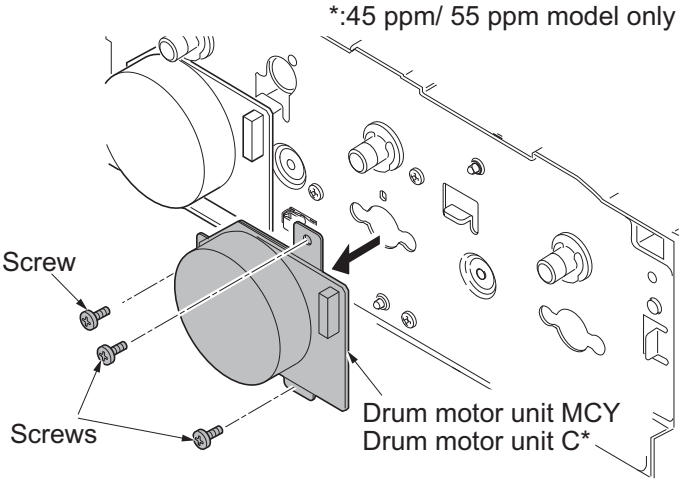

Figure 1-5-169

14. Remove two screws
15. Remove the drive mounfing bracket.

    *: Remove the drum motor M in the same way.

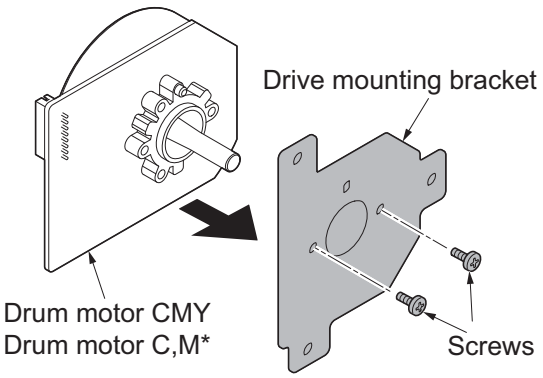

Figure 1-5-170

(2) Detaching and refitting the main drive unit

Procedure

1. Remove the drum drive unit K and the drum drive unit MCY (see page 1-5-101).
2. Release three wire saddles on the main drive unit.
3. Remove two connectors.

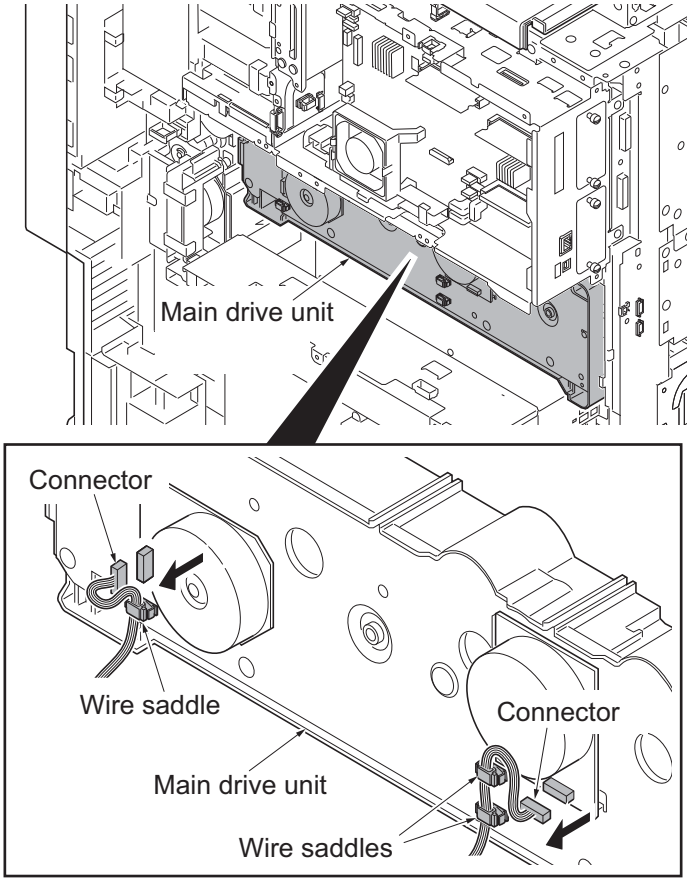

Figure 1-5-171

4. Remove five screws.
5. Remove the main drive unit.
6. Check or replace the main drive unit and refit all the removed parts.

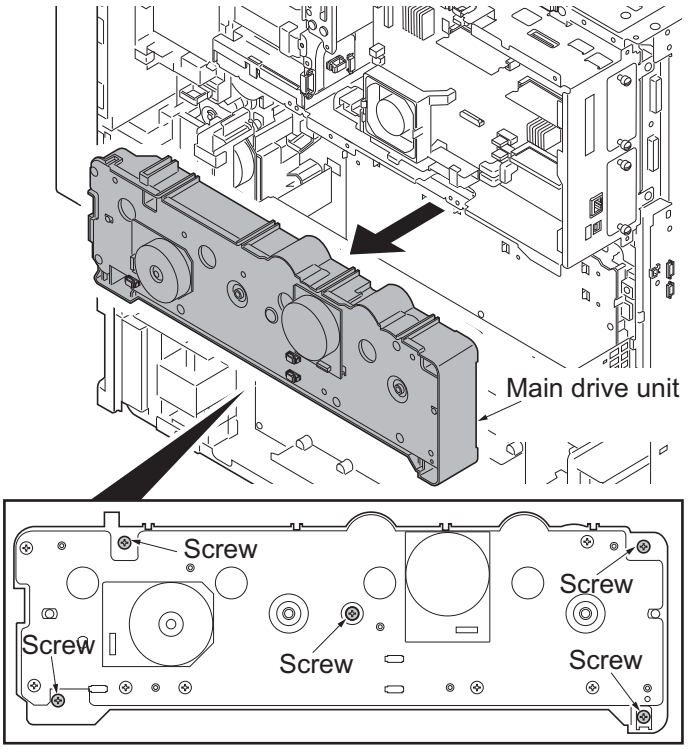

Figure 1-5-172

(3) Detaching and refitting the fuser drive unit, transfer drive unit and feed drive unit

Procedure

Detaching the fuser drive unit

1. Remove the rear upper cover and the rear lower cover (see page 1-5-96).
2. Remove five wire holders of feed PWB 1 assembly.
3. Release the wire saddle.

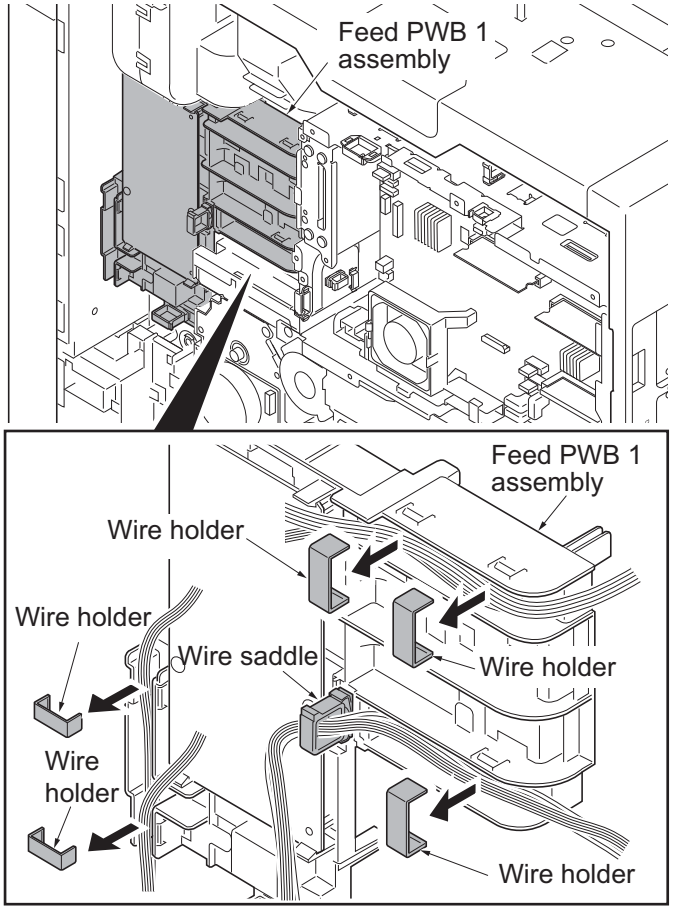

Figure 1-5-173

4. Remove the following twenty connectors from the feed PWB 1.
   YC18, YC19
   YC20, YC27
   YC26, YC3
   YC17, YC14
   YC10, YC16
   YC13, YC12
   YC23, YC25
   YC15, YC11
   YC5, YC4
   YC1 (Connector type FFC)
   YC2 (Connector type FFC)

*: Before removing the connector type FFCs of YC1 and YC2, unlock the lock by pressing the lock lever in its center.

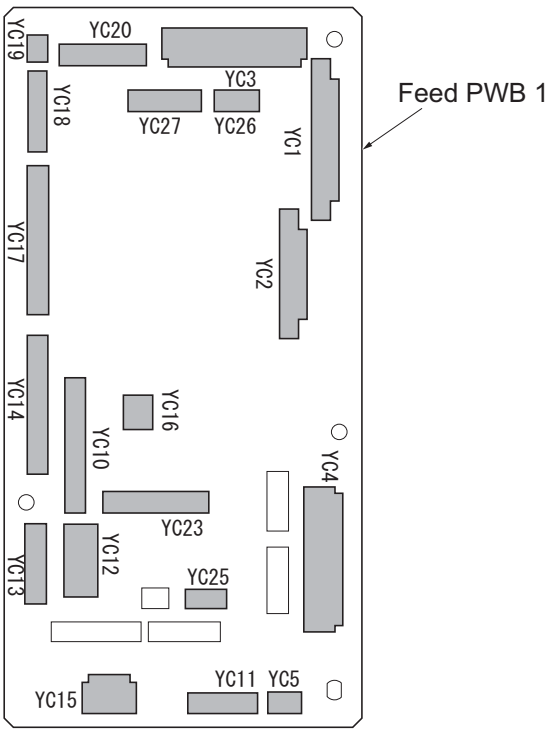

Figure 1-5-174

5. Remove the FFC from the FFC connector with a lock (YC4) on the engine PWB.
   Remove the FFC from the FFC connector with a lock (YC1) on the feed PWB 2.

*: Before removing the connector type FFCs , unlock the lock by pressing the lock lever in its center.

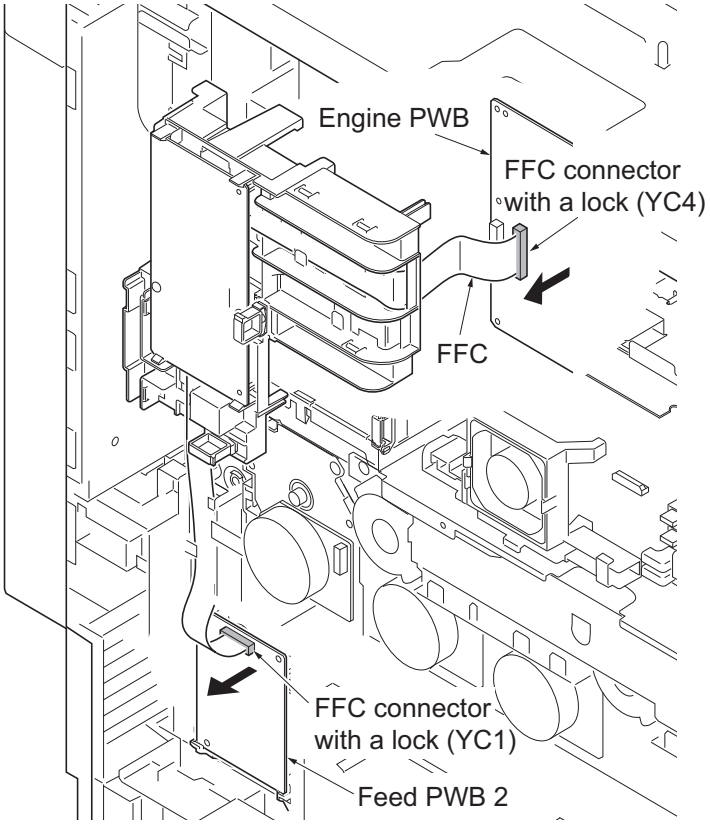

Figure 1-5-175

6. Remove three screws.
7. Remove the feed PWB 1 assembly.

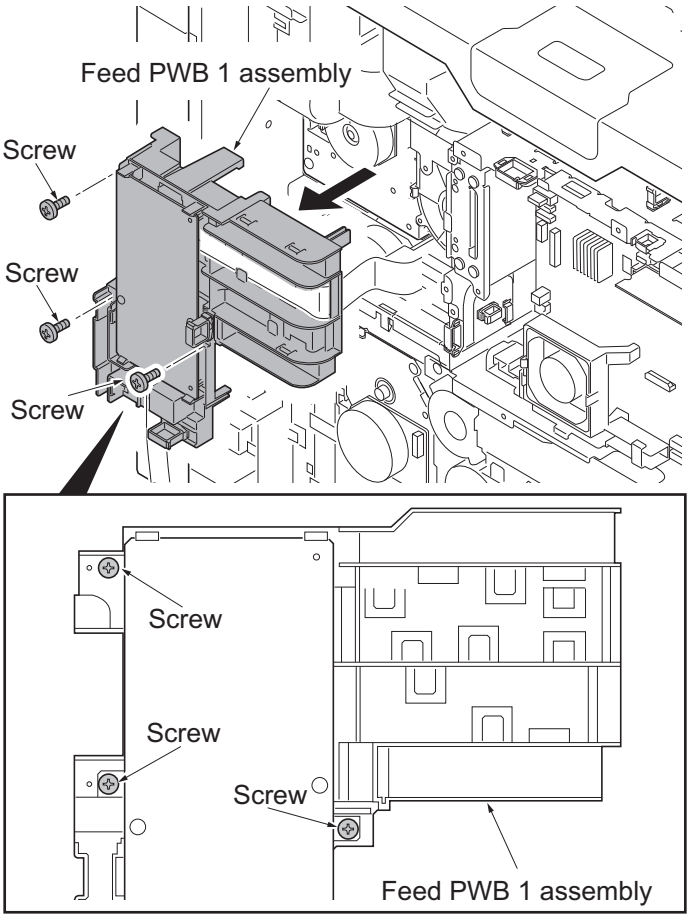

Figure 1-5-176

8. Remove the connector.
9. Remove three screws.
10. Remove the fuser drive unit.

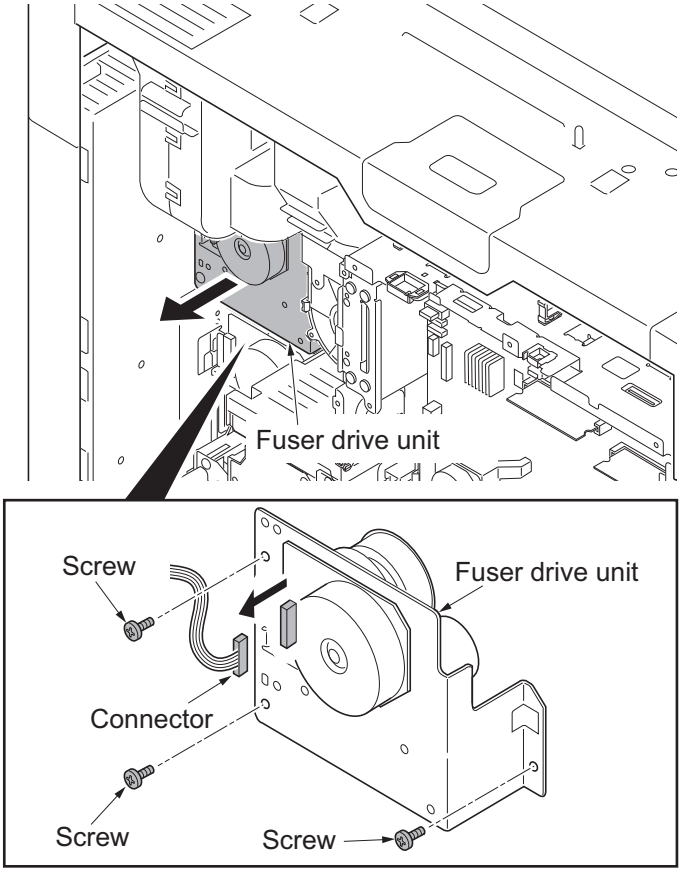

Figure 1-5-177

Detaching the transfer drive unit

11. Pull out the transfer belt unit a little (see page 1-5-62).
12. Release the clamp.
13. Remove the connectors.
    30ppm model/35ppm model: 1
    45ppm model/55ppm model: 2
14. Remove three screws.
15. Remove the transfer drive unit.

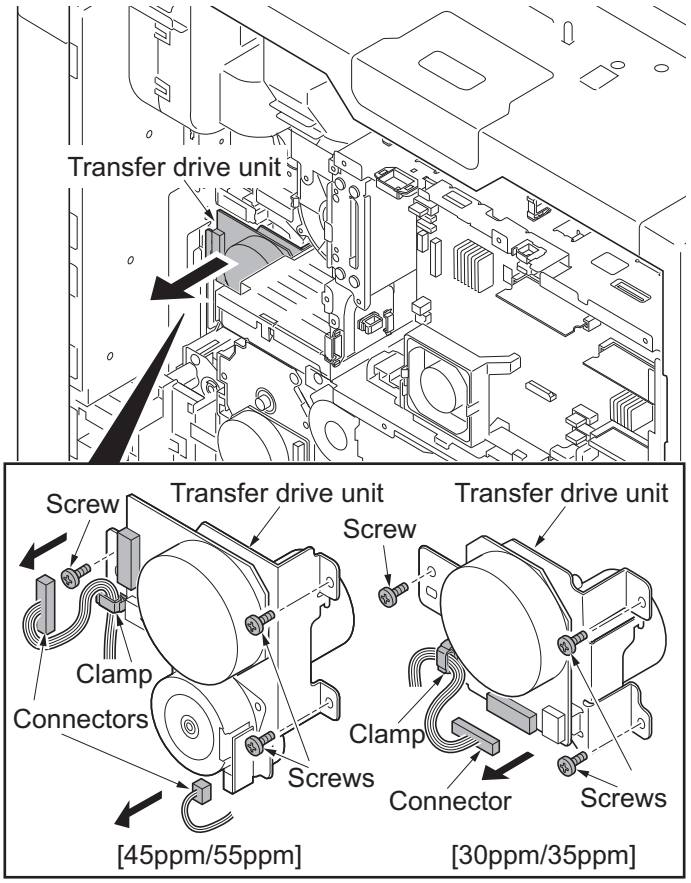

Figure 1-5-178

Detaching the feed drive unit

16. Remove three wire holders from the feed 2 FFC guide.

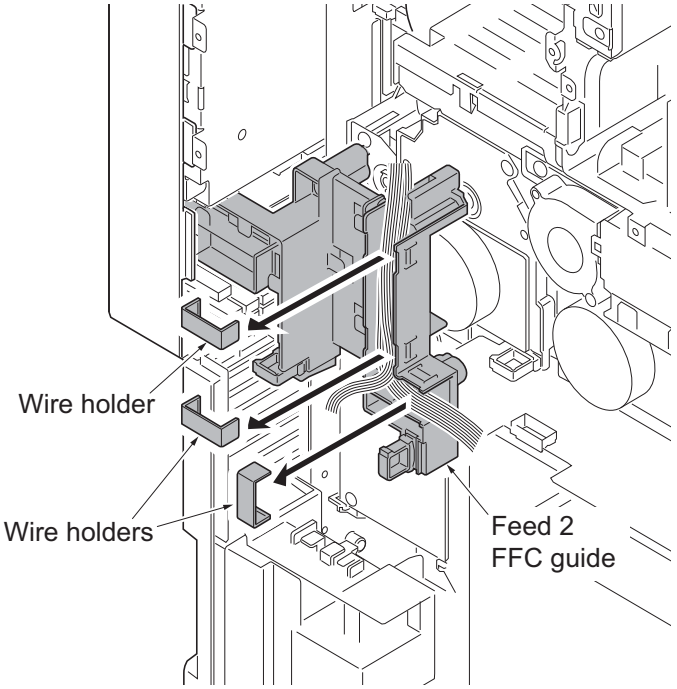

Figure 1-5-179

17. Remove two screws and then remove the feed 2 FFC guide.

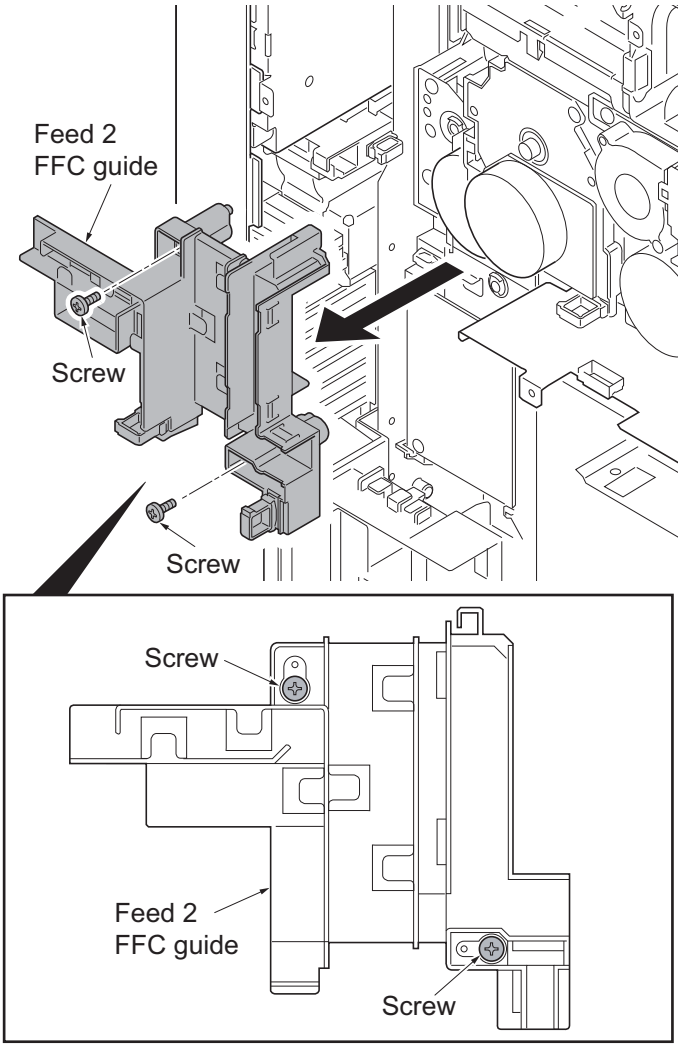

Figure 1-5-180

18. Remove the following nine connectors from the feed PWB 2.
    YC10
    YC11
    YC7
    YC8
    YC3
    YC5
    YC6
    YC13
    YC12

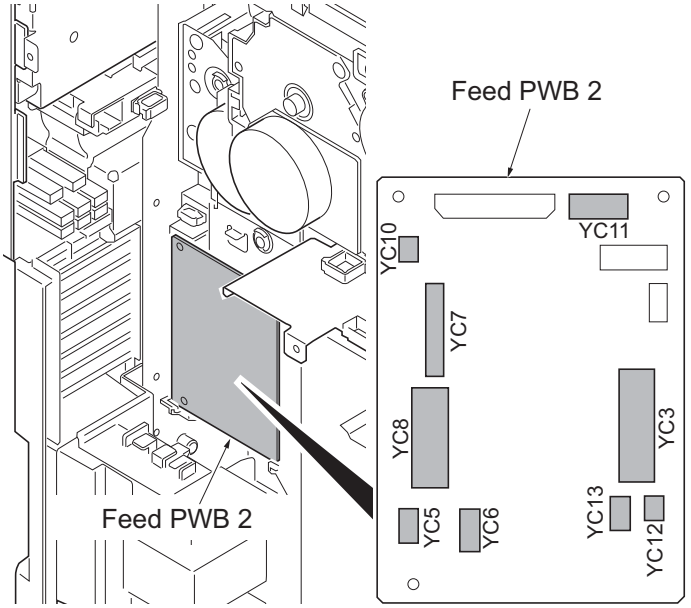

Figure 1-5-181

19. Remove three screws.
20. Remove the feed drive unit.

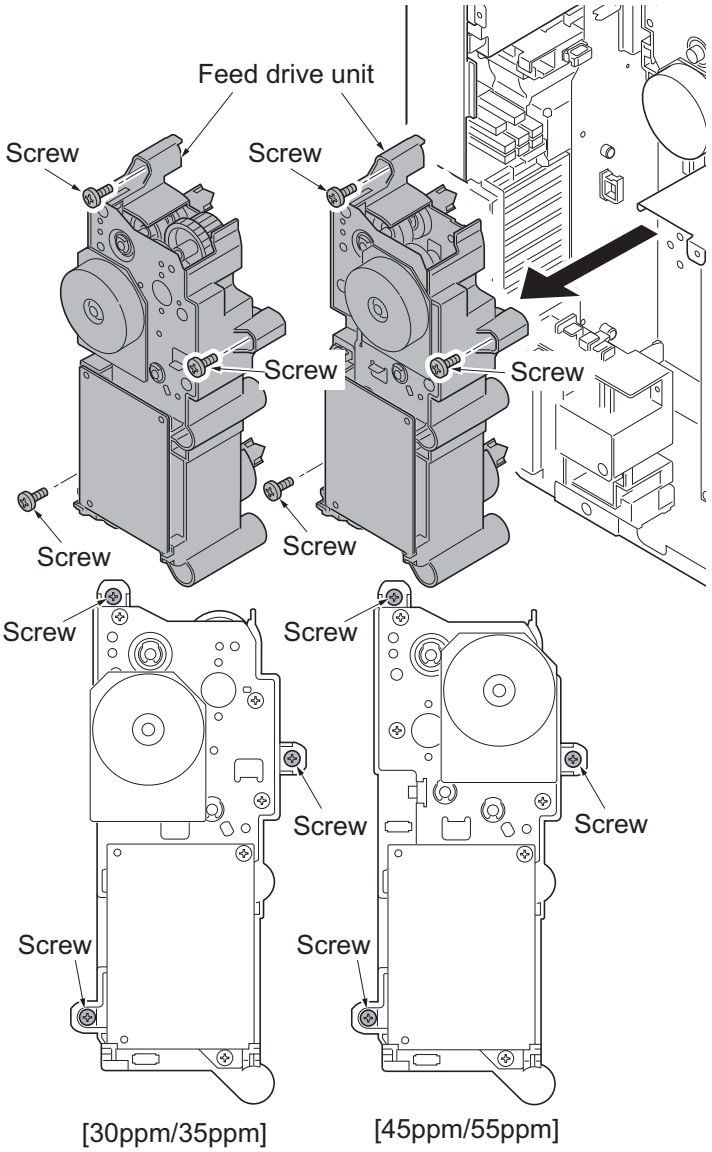

Figure 1-5-182

21. Check or replace the feed drive unit and refit all the removed parts.
    *: Connect the connector (yellow) to the connector of paper feed clutch 1 on stamp [YELLOW] side as before, when removing the connector of the paper feed clutch as the check of the feed drive unit etc.

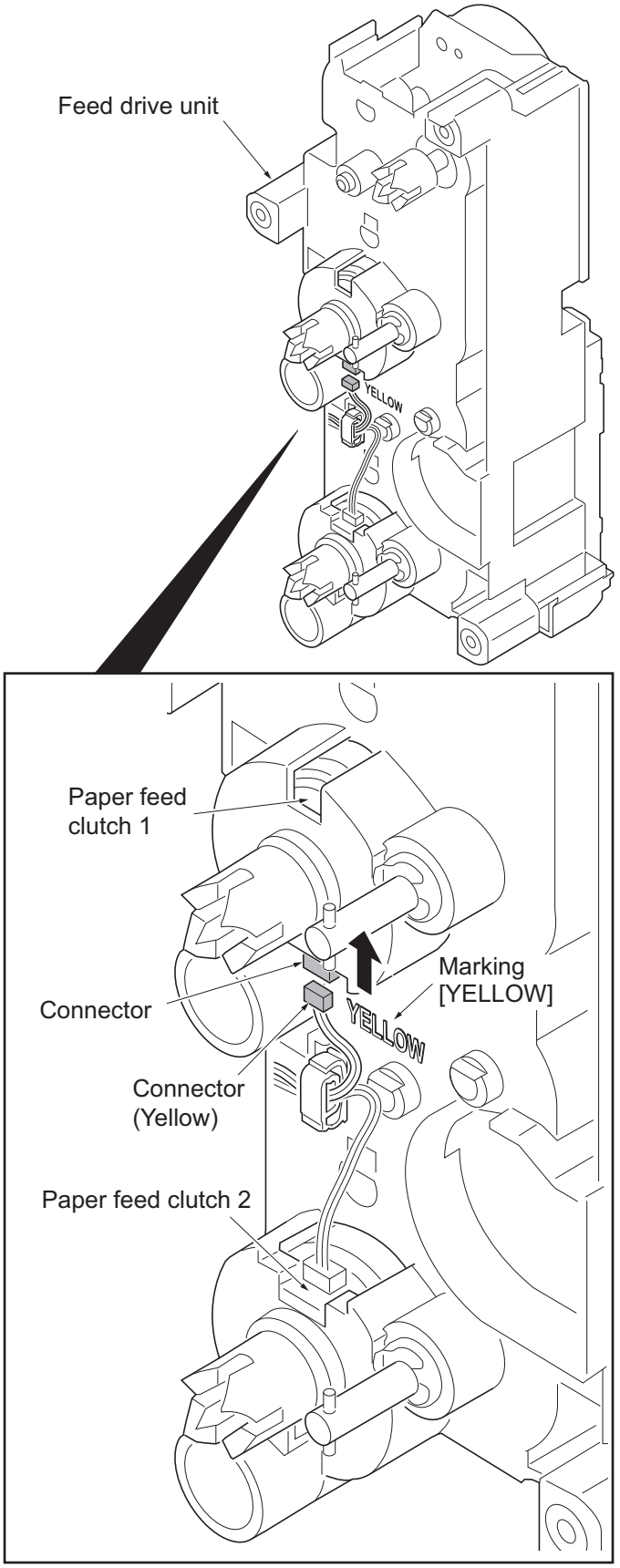

Figure 1-5-183

(4) Detaching and refitting the lift motor 1 and 2

Procedure

1. Remove the rear lower cover (see page 1-5-96).
2. Remove the power source assembly (see page 1-5-85).
3. Remove the connector each.
4. Remove two screws each.
5. Remove the lift motor 1 and 2.
6. Check or replace the lift motor and refit all the removed parts.

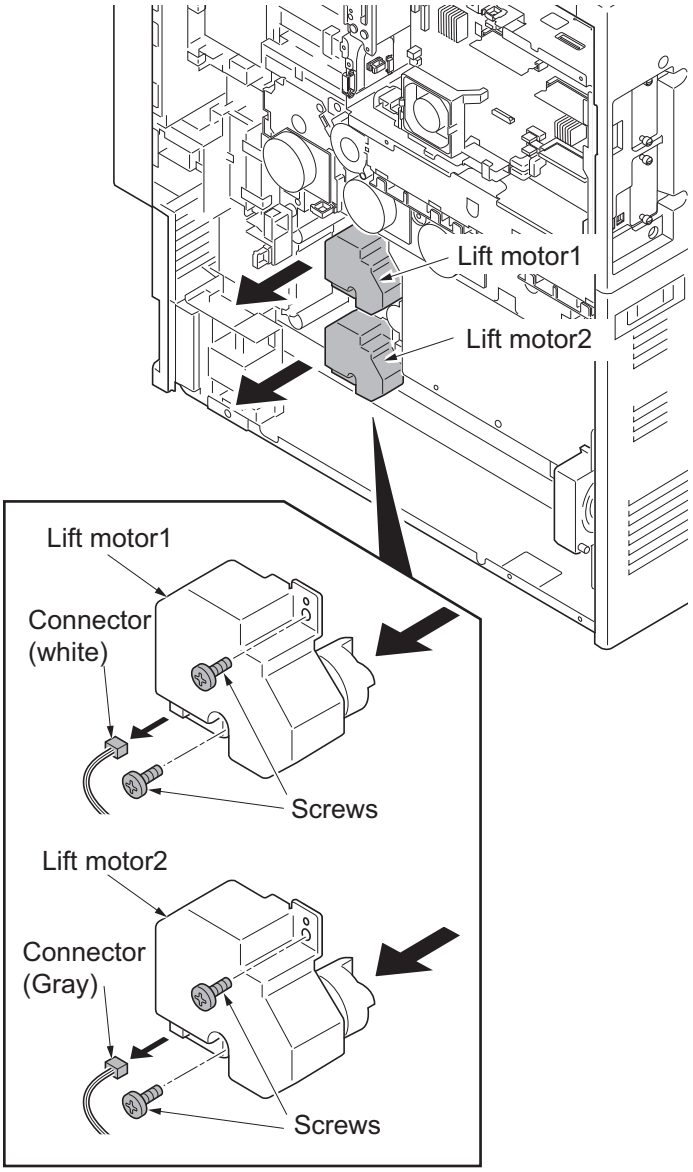

Figure 1-5-184

1-5-10 Others

(1) Detaching the eject filter

Procedure

1. Unhook the hook each and remove two eject filter units.
2. Remove the eject filter from the eject cover.
3. Clean or replace the eject filter and refit the filter.

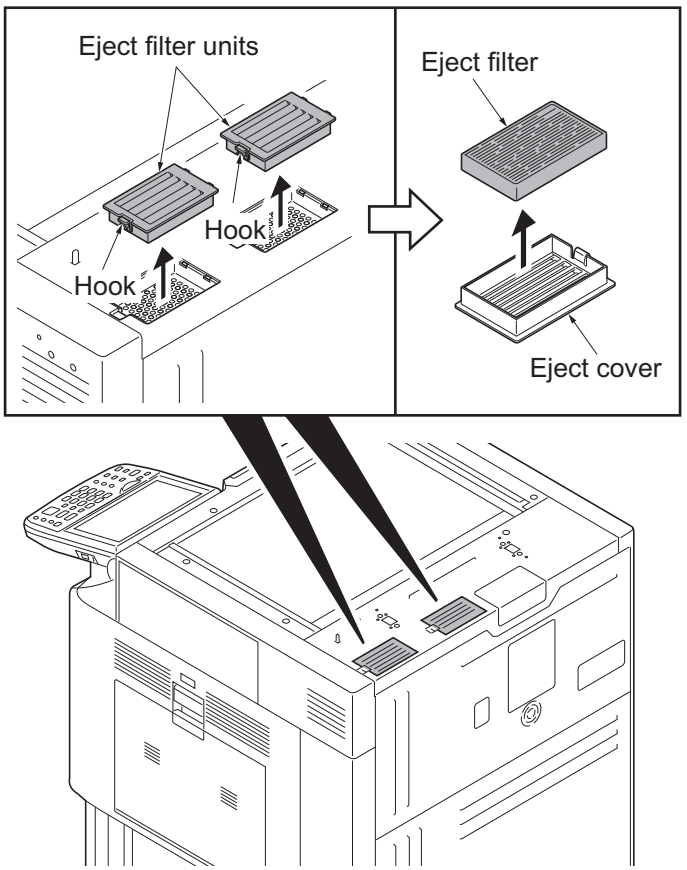

Figure 1-5-185

(2) Detaching and refitting the toner filter and left filter [45 ppm model / 55 ppm model]

Procedure

Toner filter

1. Remove the toner filter unit while gripping the levers.
2. Clean or replace the toner filter unit and refit the filter.

Left filter

1. Remove the left filter cover by releasing the lever.
2. Remove the left filter.
3. Clean or replace the left filter and refit the filter.

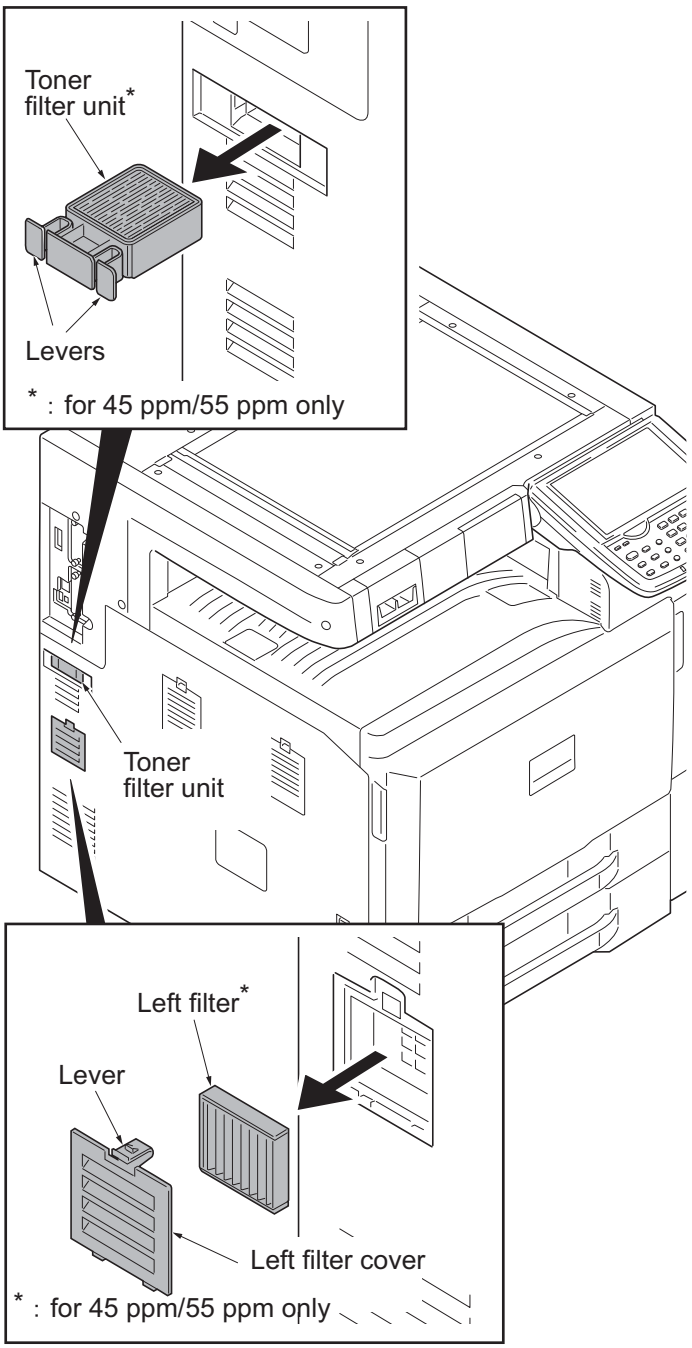

Figure 1-5-186

(3) Detaching and refitting the fan filter

Procedure

1. Open the front cover.
2. Remove the fan filter by releasing the lever.
3. Clean the fan filter.
4. Refit the fan filter.

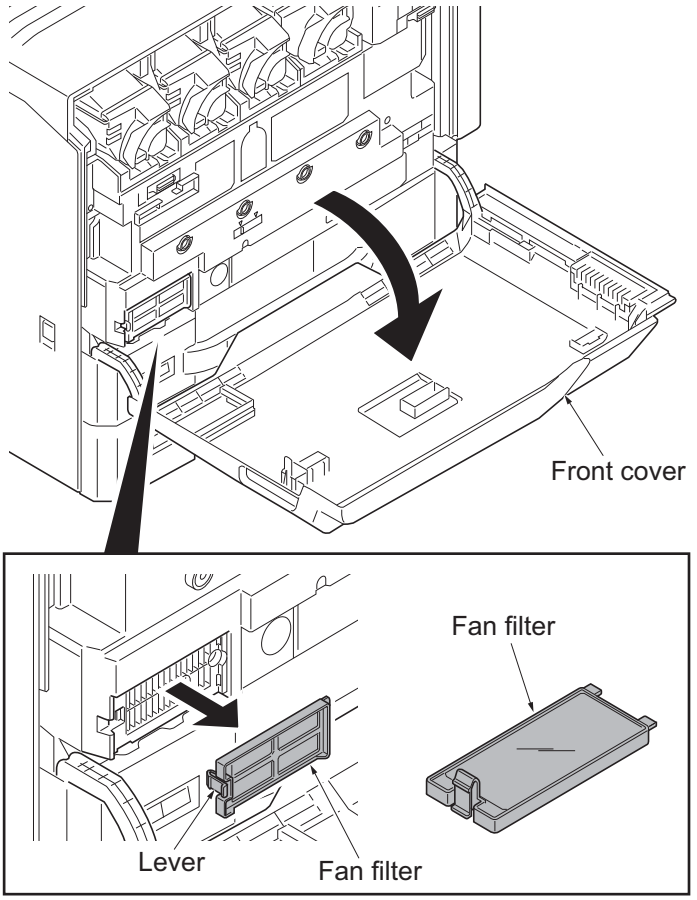

Figure 1-5-187

(4) Detaching and refitting the transfer belt filter

Procedure

1. Remove two transfer belt filters by releasing the lever.
2. Clean the transfer belt filter.
3. Refit the transfer belt filter.

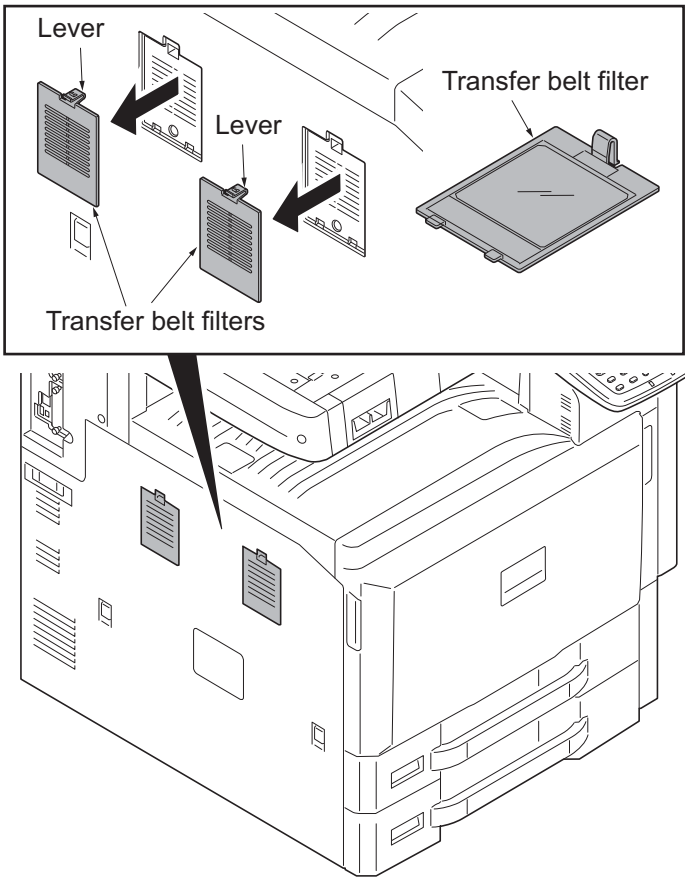

Figure 1-5-188

(5) Detaching and refitting the developer filter [45 ppm model / 55 ppm model]

Procedure

1. Remove the developer filter cover by releasing the lever.
2. Remove the developer filter.
3. Clean the developer filter and refit the filter.

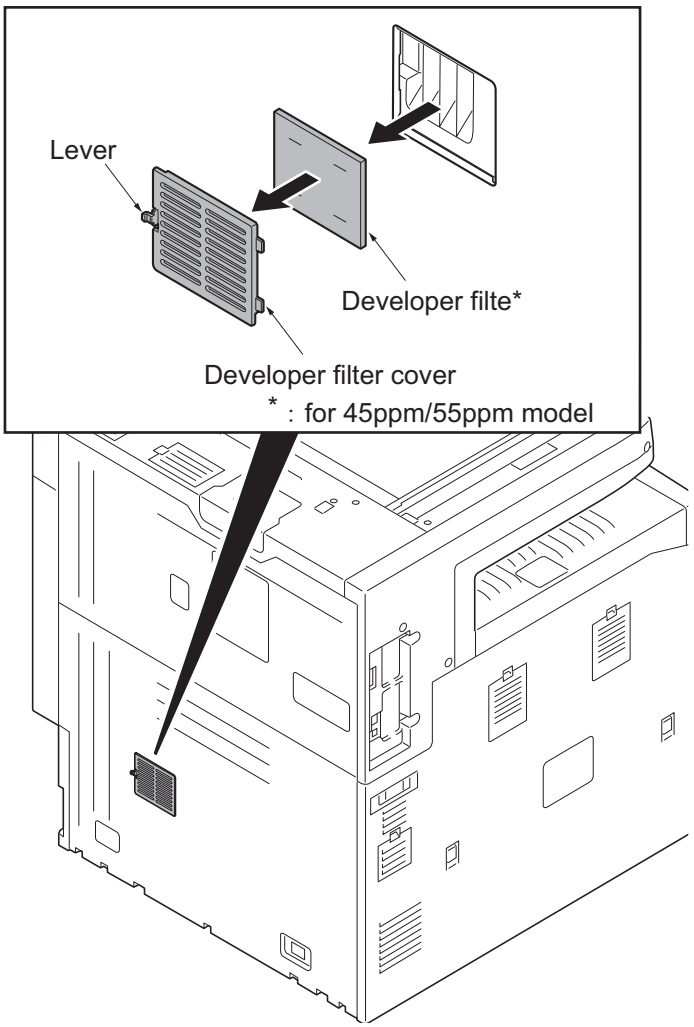

Figure 1-5-189

(6) Detaching and refitting the hard disk unit

Procedure

1. Perform maintenance mode U917 (backup data reading) (see page 1-3-226).
2. Remove the rear upper cover (see page 1-5-96).
3. Release the wire saddle.
4. Remove two screws.

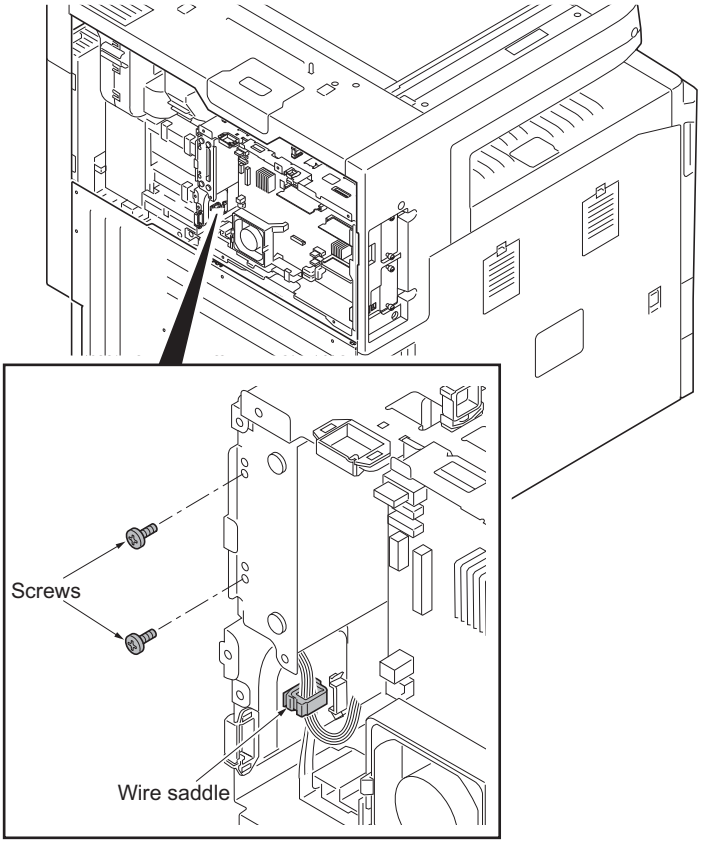

Figure 1-5-190

5. Unhook two hooks and pull out the HDD bracket a little.

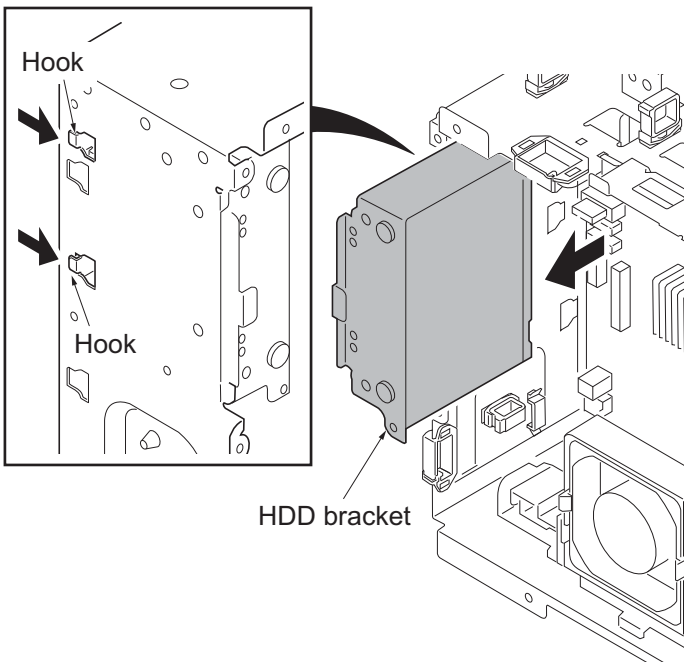

Figure 1-5-191

6. Remove two connectors from the hard disk unit while pushing the lock lever. Number of hard disk unit equipment

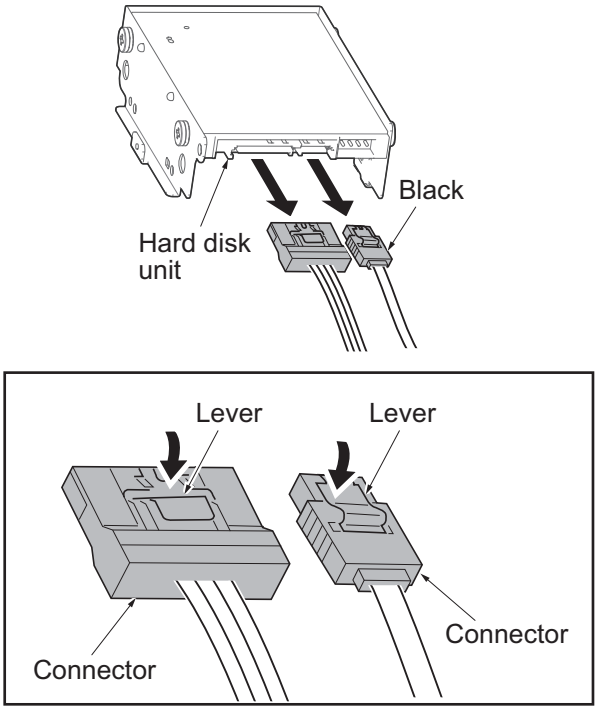

Figure 1-5-192

7. Remove four pins and then remove the hard disk unit from the HDD bracket.
8. Replace the hard disk unit and refit all the removed parts.

*: Handle the HDD so as not to drop or get it in touch with hard objects as it is susceptible to vibrations and impacts especially along the direction of disc rotation. Be careful not to apply shocks while securing the screws.

9. Perform maintenance mode U024 (HDD formatting) -Format - Full (see page 1-3-34).

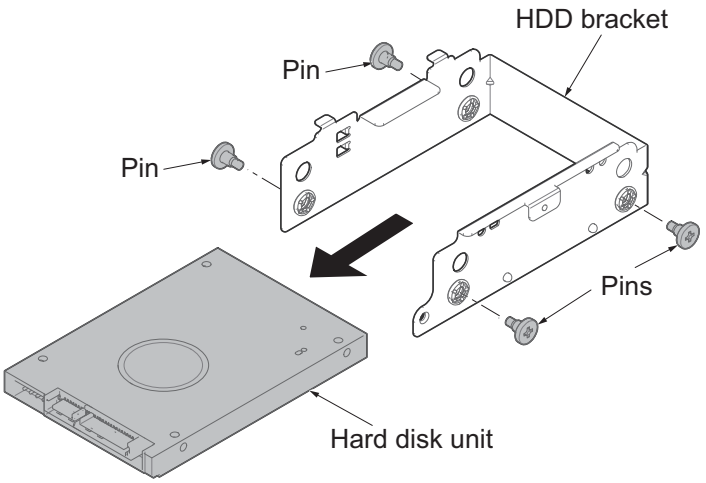

Figure 1-5-193

10. Install the firmwares by the following procedure.
    1)Connects to the machine the USB memory that preserved Software LANGUAGE BR (Opt Font,Opt Msg,opt Eweb) and option language.
    The firmware is installed by switching the main power switch to ON/OFF.
    2)Connects to the machine the USB memory that preserved FMU application. Installs the firmware from the application screen of the system menu.(Refer to operation guide.)
    *: Confirm a kind of Hypas application displayed with an application screen before HDD exchange, and install it again.
    3)Copy two Multi Color Tables (copiers and printers) from a USB flash device by running U485.
    4)Reinstall the OCR dictionary software from a USB flash device by toggling power on and off.

11. If backup data is saved with the U917 maintenance mode, execute import of the backup data with the U917 (see page 1-3-198).

(7) Detaching and refitting the eject unit

Procedure

1. Remove the right upper cover (see page 1-5-97).
2. Remove the fuser unit (see page 1-5-68).
3. Remove the connector.
4. Remove two screws and then remove the eject unit.
5. Check or replace the eject unit and refit all the removed parts.

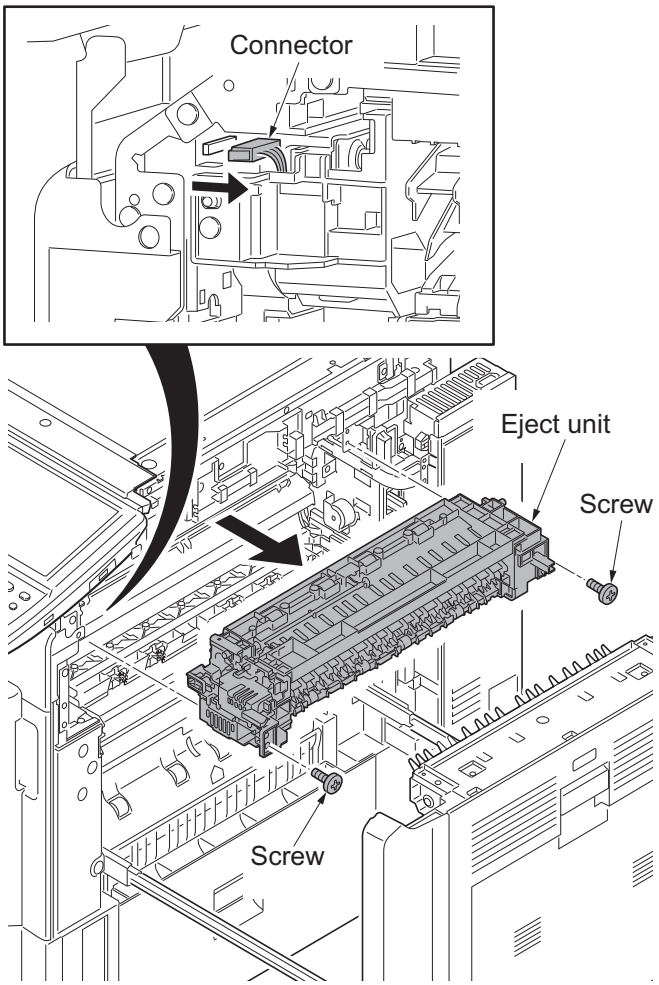

Figure 1-5-194

Cautions on installing the eject unit

When inserting the eject unit into the device, use care that the eject unit does not get in contact with the eject guide, by keeping its actuator lifted while inserting.

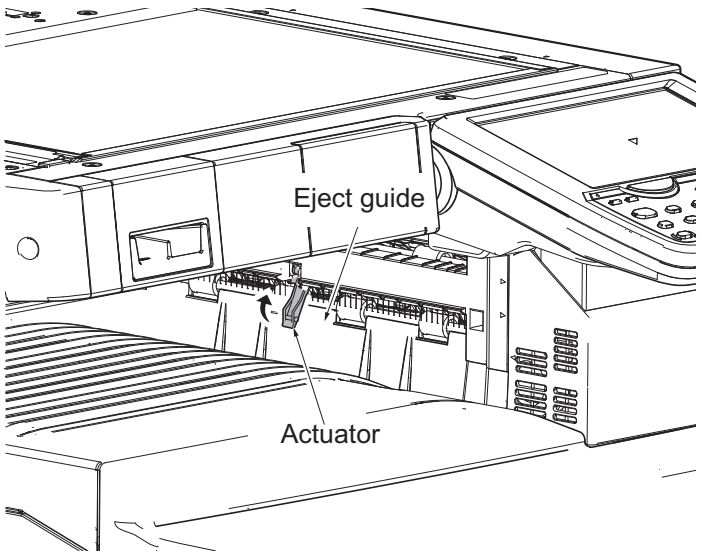

Figure 1-5-195

(8) Direction of installing the principal fan motors

When detaching or refitting the fan motors, be careful of the airflow direction (intake or exhaust).

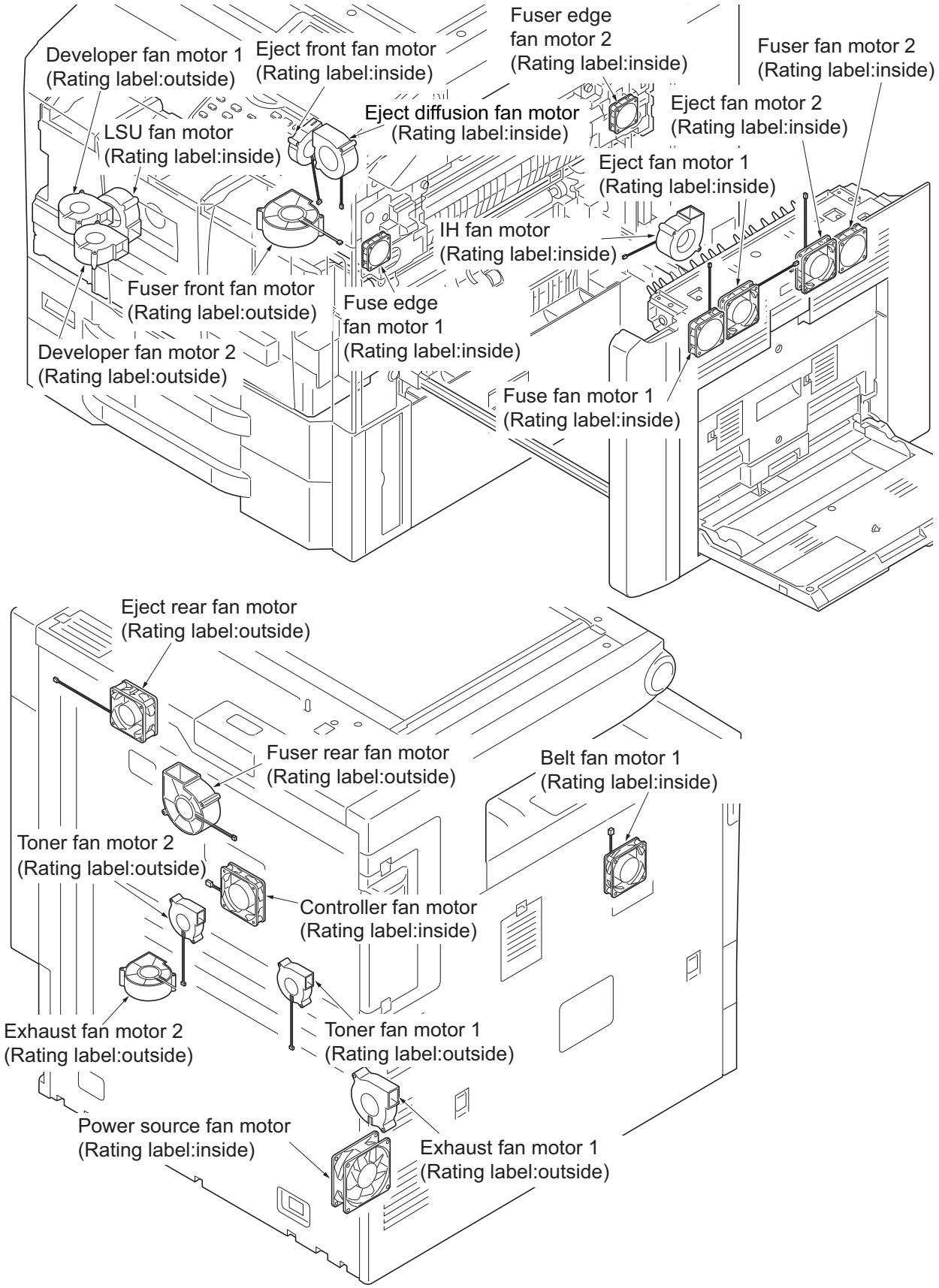

Figure 1-5-196

(9) Skewed paper feeding check/adjustment

At the paper feed source which a sheet of wrinkled paper has caused, check how the paper is fed askew.
Run U051 to reduce the curvature of paper at the regist roller and measure how the paper is fed askew.

1. Print a maintenance report and note the U051 value.
2. Reduce the value by 10 for the paper source in question.(See page -1-5-49.)
3. Press the system menu button to print a test chart.

Check the skew value (balance of left and right, B-A).
Less than 1mm: OK
1mm or more:
Correct the skew by using the paper angle adjusting mechanism (in cassette) that modifies the angle of the paper width guides.

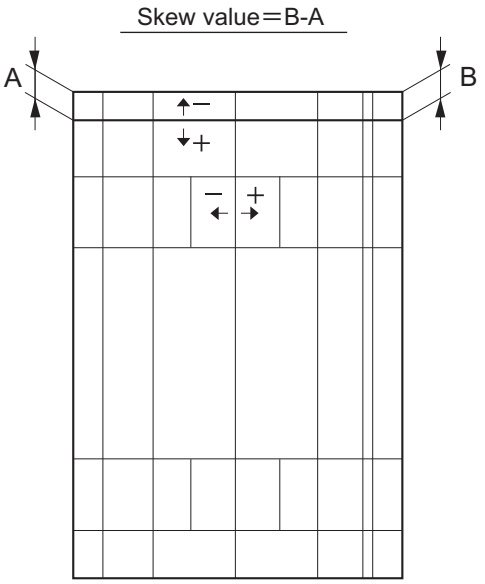

Figure 1-5-197

Procedure

1. Unsecure the fixing screws (screw 1 to 4) and adjust the angle of the paper width guide by the skew feed adjustment screw.
   If the B-A is negative, rotate clockwise.
   If the B-A is positive, rotate counter-clockwise.
2. Tighten the four screw.
   *: Secure the screws in the order of screws 1, 2, 3, then 4.
3. Run U051 and reset the curvature the regist roller.

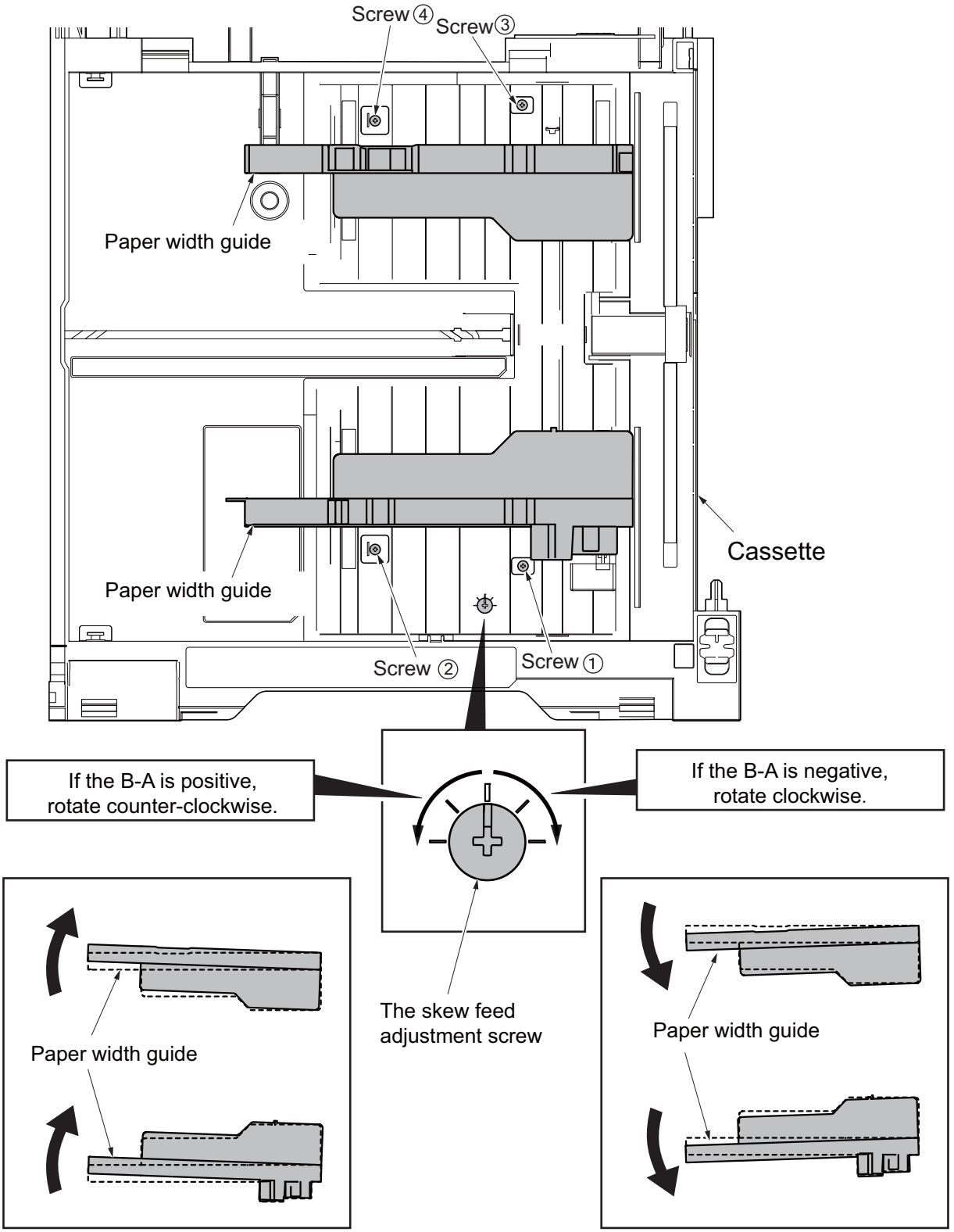

Figure 1-5-198

1-6-1 Upgrading the firmware

Follow the procedure below to upgrade the firmware of main PWB, operation PWB, engine PWB, ISC PWB, fuser IH PWB, motor control PWB, optional language, color table and optional devices.

* : Firmware upgrade must be preceded by an authentication using U025 if the security level is set to Very High.

Preparation

Extract the file that has the download firmware and put them in the USB flash device.

Procedure

1. Perform maintenance item U000 (maintenance report output) and check U019 firmware version.
2. Press the power key on the operation panel, and after verifying the power indicator has gone off, switch off the main power switch.
3. Insert the USB flash device in which the firmware has been written into a notch hole of the machine.
4. Turn the main power switch on. Upgrading firmware starts (blinking the memory LED).
   Caution:
   Never turn off the power switch or remove the USB flash device during upgrading.
5. [FW-UPDATE] is displayed on the touch panel when upgrading is complete.
6. Switch off the main power switch.
7. Wait for several seconds and then remove the USB flash device from the machine.
8. Turn the main power switch on.
9. Perform maintenance item U000 (maintenance report output) and check that U019 firmware version has been upgraded.

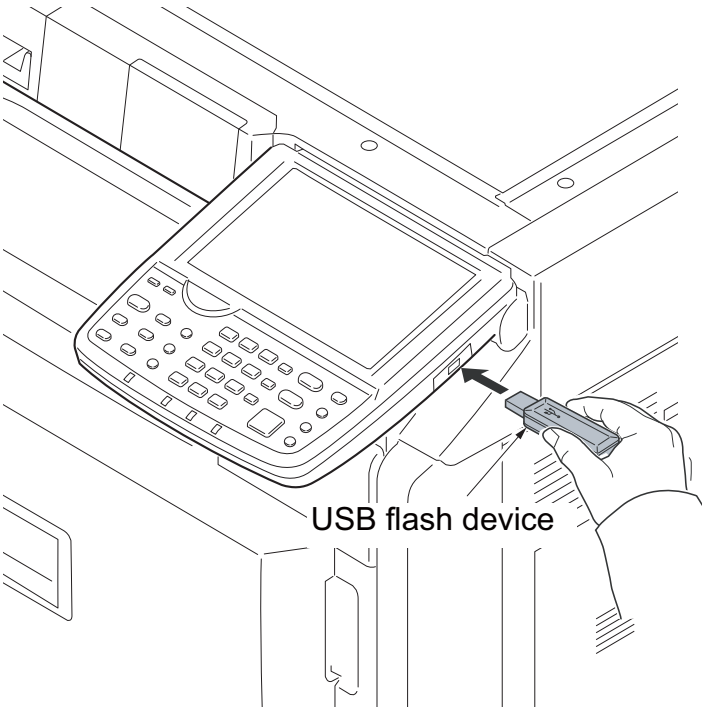

Figure 1-6-1

Safe-UPDATE

If the device is accidentally switched off or the USB memory is disconnected and upgrading is incomplete, perform the following.

If the power is accidentally switched off, turn the power on without removing the USB memory and perform the above steps 4 through 9.

If the USB memory is disconnected, reinsert it, then turn the power on and perform the above steps 4 through 9.

In any case, complete the steps to the end.

Emergency-UPDATE

If Safe Update is processed to the end, the firmware update is complete. In case the message below is indicated, update the firmware after recovery with the steps below.

```
FW-Update
          Error  FFFF
```

Note that this is unoperable when the device is operating normally.

Preparation

The USB flash device must be formatted in FAT or FAT32 in advance.
Extract the main firmware to download from the file.
Rename the file which was extracted from the archive. [DL_CTRL.2N4] to [KM_EMRG.2N4]
Copy the all extracted files to the root of the USB flash device.

Procedure

1. Turn the main power switch off.
2. Insert the USB flash device in which the firmware was copied into the USB flash device slot at the left of the machine.
3. Turn the main power switch on.
4. Rewriting of the PWB software will start for restoration.
   (The LCD, memory LED, and attention LED on the operation panel will be showing the progress.)
5. The operation panel LCD will show “Completed” when rewriting has been finished.
   * : In case rewriting has been failed, “Error XXXX" (XXXX means an error code) will be shown.
6. Turn the main power switch off.
7. Wait for several seconds and then remove the USB flash device from the machine.

8. Insert the USB flash device in which an upgrade pack of the latest firmware or the Main/MMI/Browser and LAN-GUAGE BR (excluding Dictionary) were copied, into the slot on the machine and turn power on. (see page P.1-6-1).

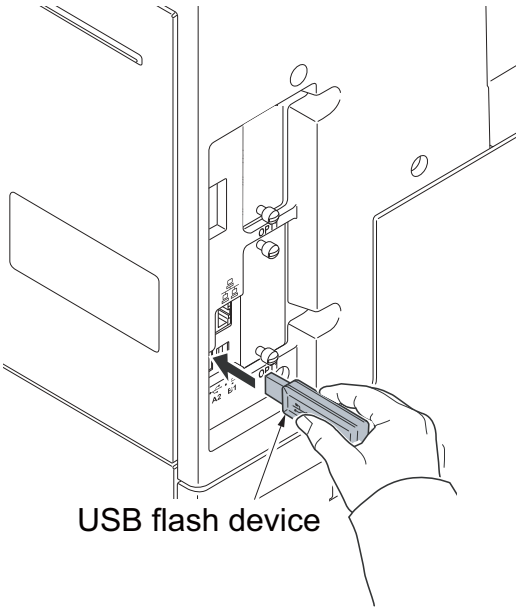

Figure 1-6-2

2-1-1 Paper feed/conveying section

Paper feed/conveying section consists of the paper feed unit that feeds paper from the cassette and the MP tray paper feed unit that feeds paper from the MP tray, and the paper conveying section that conveys the fed paper to the transfer/separation section.

(1) Cassette paper feed section

Cassette paper feed section consists of the paper holder with the cassette operation plate activated by lift motor 1 and 2, and the pulleys, such as the forwarding pulley, the paper feed pulley and the separation pulley, for extracting and conveying the paper. Paper is fed out of the cassette by the rotation of the forwarding pulley, paper feed pulley and separation pulley.

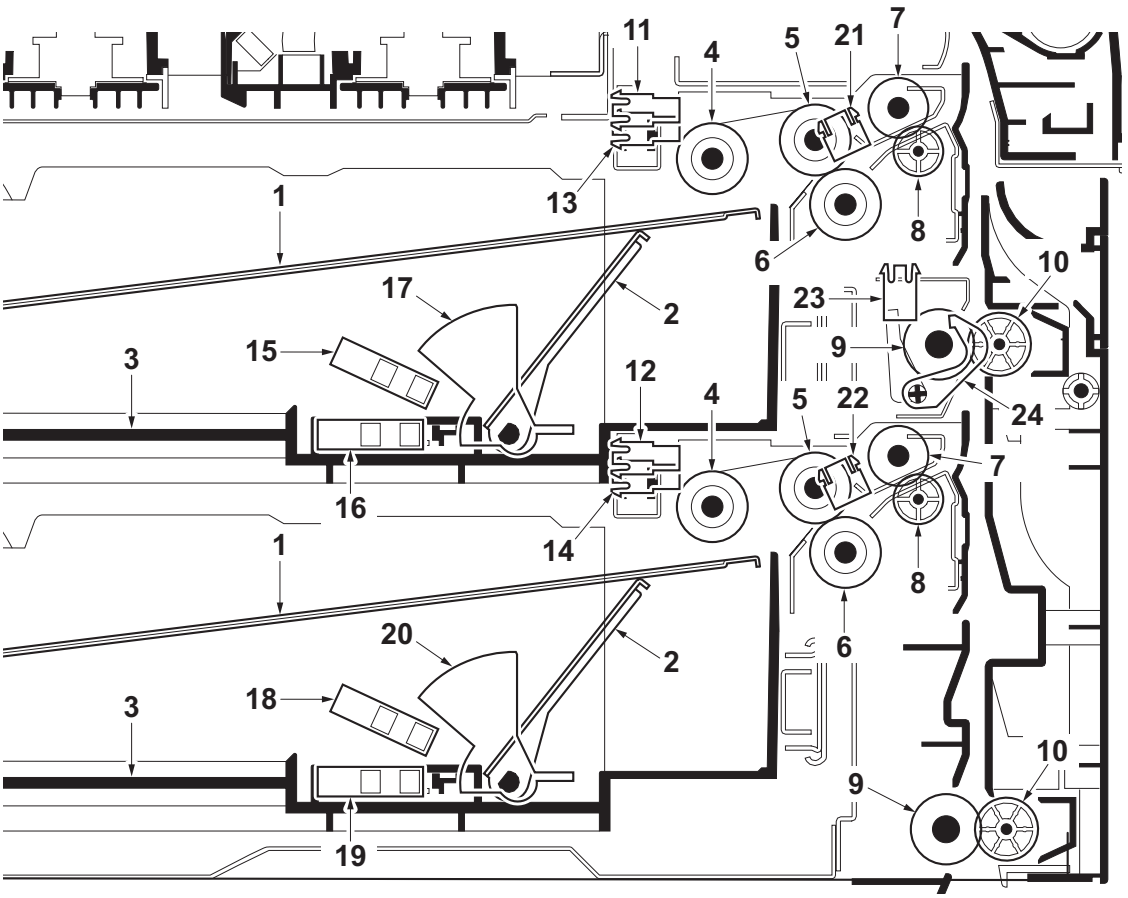

Figure 2-1-1 Cassette paper feed section

1. Cassette base
2. Cassette operation plate
3. Cassette
4. Forwarding pulleys
5. Paper feed pulleys
6. Separation pulleys
7. Assist rollers*
8. Assist pulleys*
9. Paper conveying roller
10. Paper conveying pulley
11. Paper sensor 1 (PS1)
12. Paper sensor 2 (PS2)
13. Lift sensor 1 (LS1)
14. Lift sensor 2 (LS2)
15. Paper gauge sensor 1 (U) (PGS1(U))
16. Paper gauge sensor 1 (L) (PGS1(L))
17. Actuator (Paper gauge sensor 1)
18. Paper gauge sensor 2 (U) (PGS2(U))
19. Paper gauge sensor 2 (L) (PGS2(L))
20. Actuator (Paper gauge sensor 2)
21. Feed sensor 1 (FS1)
22. Feed sensor 2 (FS2)
23. Paper conveying sensor (PCS)
24. Actuator (Paper conveying sensor)

*: 45 ppm/55 ppm model only

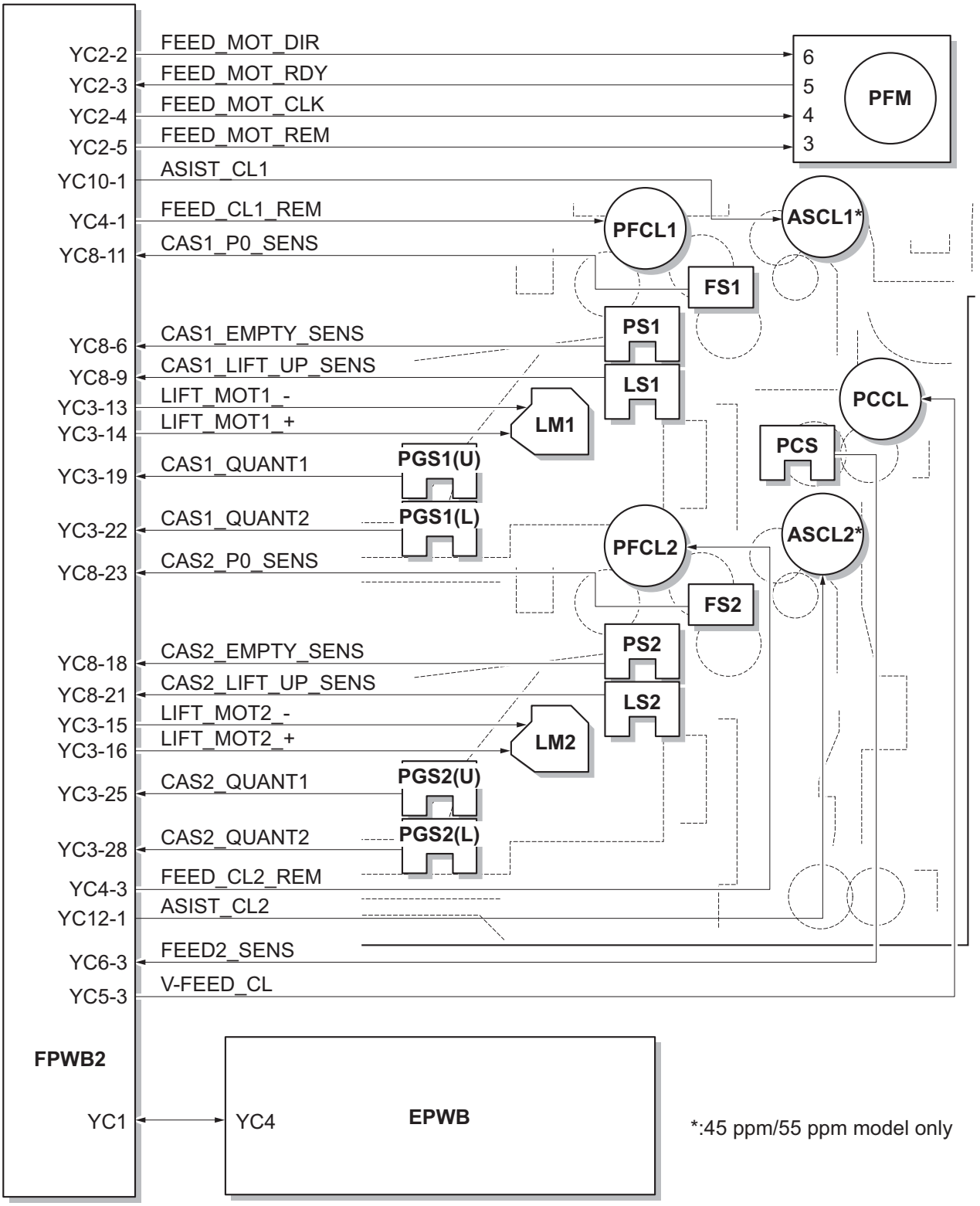

Figure 2-1-2 Cassette paper feed section block diagram

(2) MP tray paper feed section

Paper is fed out of the MP tray by the rotation of the MP forwarding pulley, MP paper feed pulley and MP separation pulley. The MP separation pulley prevents multiple sheets from being fed at one time by the torque limiter.

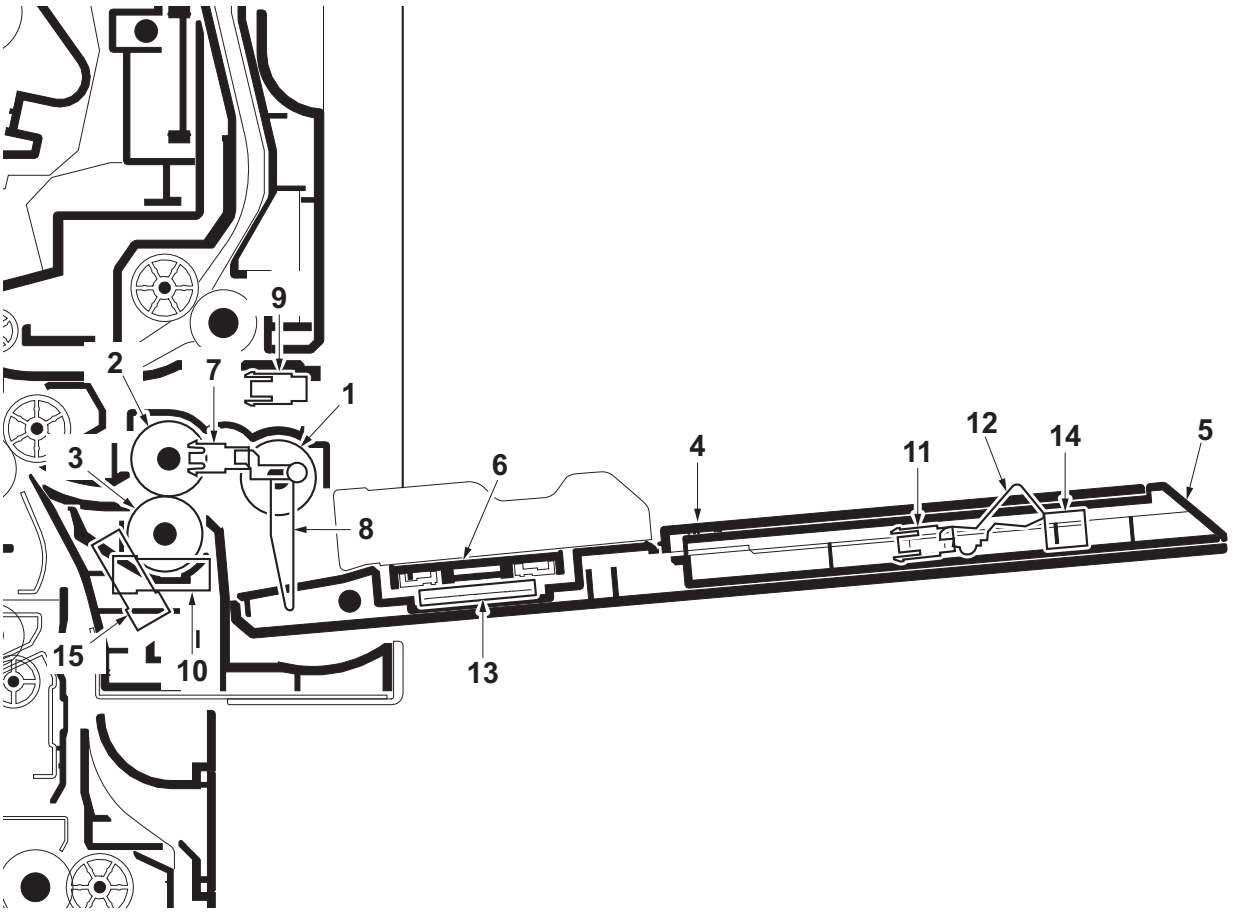

Figure 2-1-3 MP tray paper feed section

1. MP forwarding pulley
2. MP paper feed pulley
3. MP separate pulley
4. MP table
5. MP support Tray
6. MP lift base
7. MP paper sensor (MPPS)
8. Actuator (MP paper sensor)
9. MP lift sensor 1 (MPLS1)
10. MP lift sensor 2 (MPLS2)
11. MP paper length switch (MPPLSW)
12. Actuator (MP paper length switch)
13. MP paper width switch (MPPWSW)
14. MP tray switch (MPTSW)
15. MP feed sensor (MPFS)

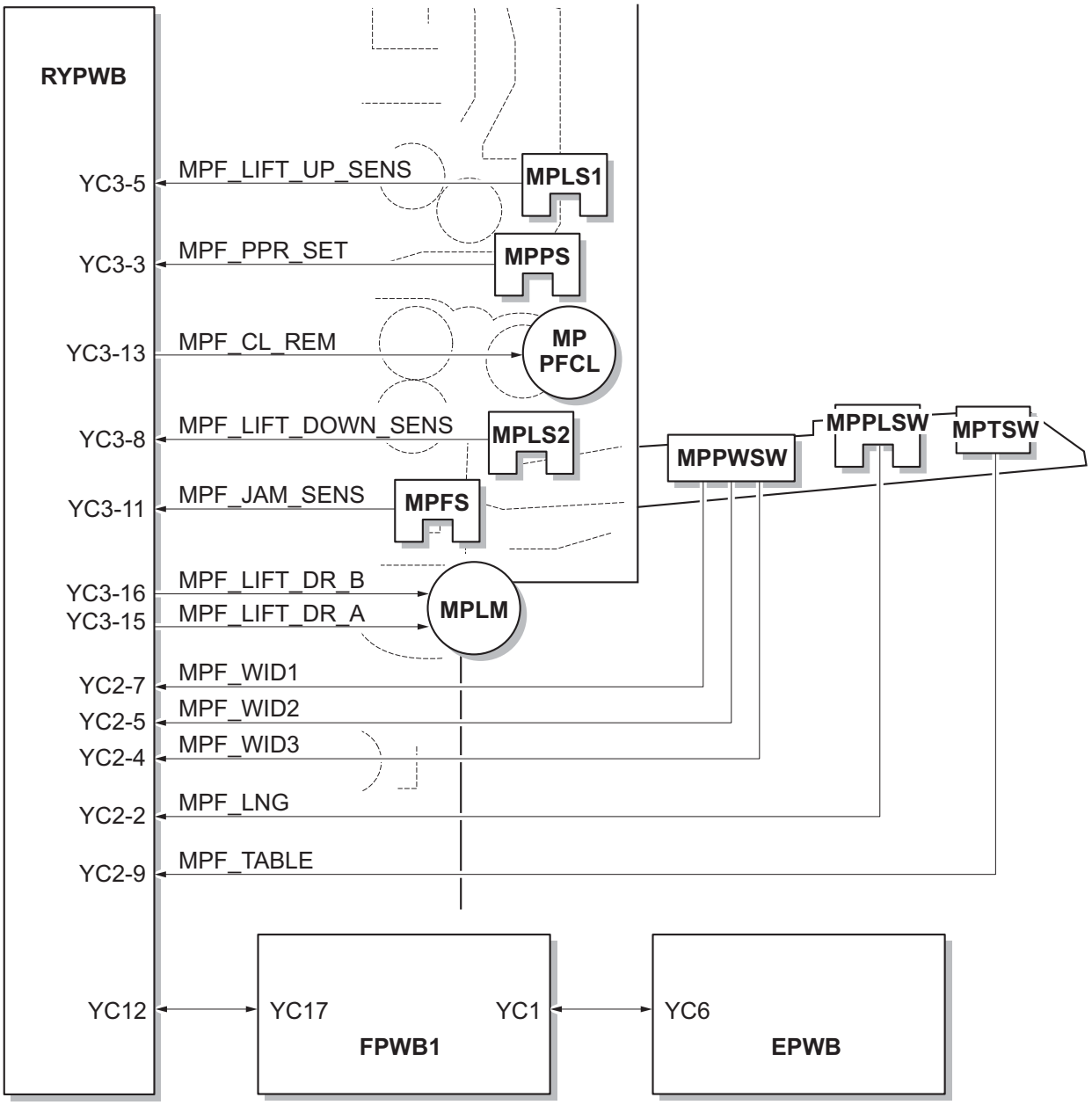

Figure 2-1-4 MP tray paper feed section block diagram

(3) Paper conveying section

The paper conveying section conveys paper to the transfer/separation section as paper feeding from the cassette or MP tray, or as paper refeeding for duplex printing. Paper by feeding is conveyed by the middle roller to the position where the registration sensor (RS) is turned on, and then sent to the transfer/separation section by the right registration roller and left registration roller.

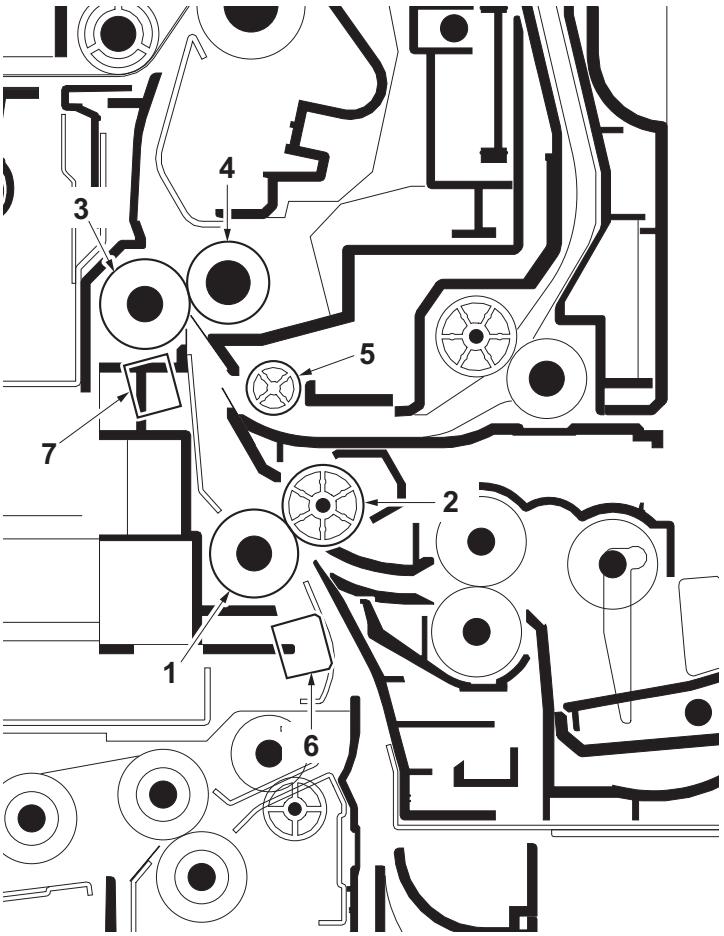

Figure 2-1-5 Paper conveying section

1. Middle roller
2. Middle pulley
3. Left registration roller
4. Right registration roller
5. Paper conveying pulley
6. Middle sensor (MS)
7. Registration sensor (RS)

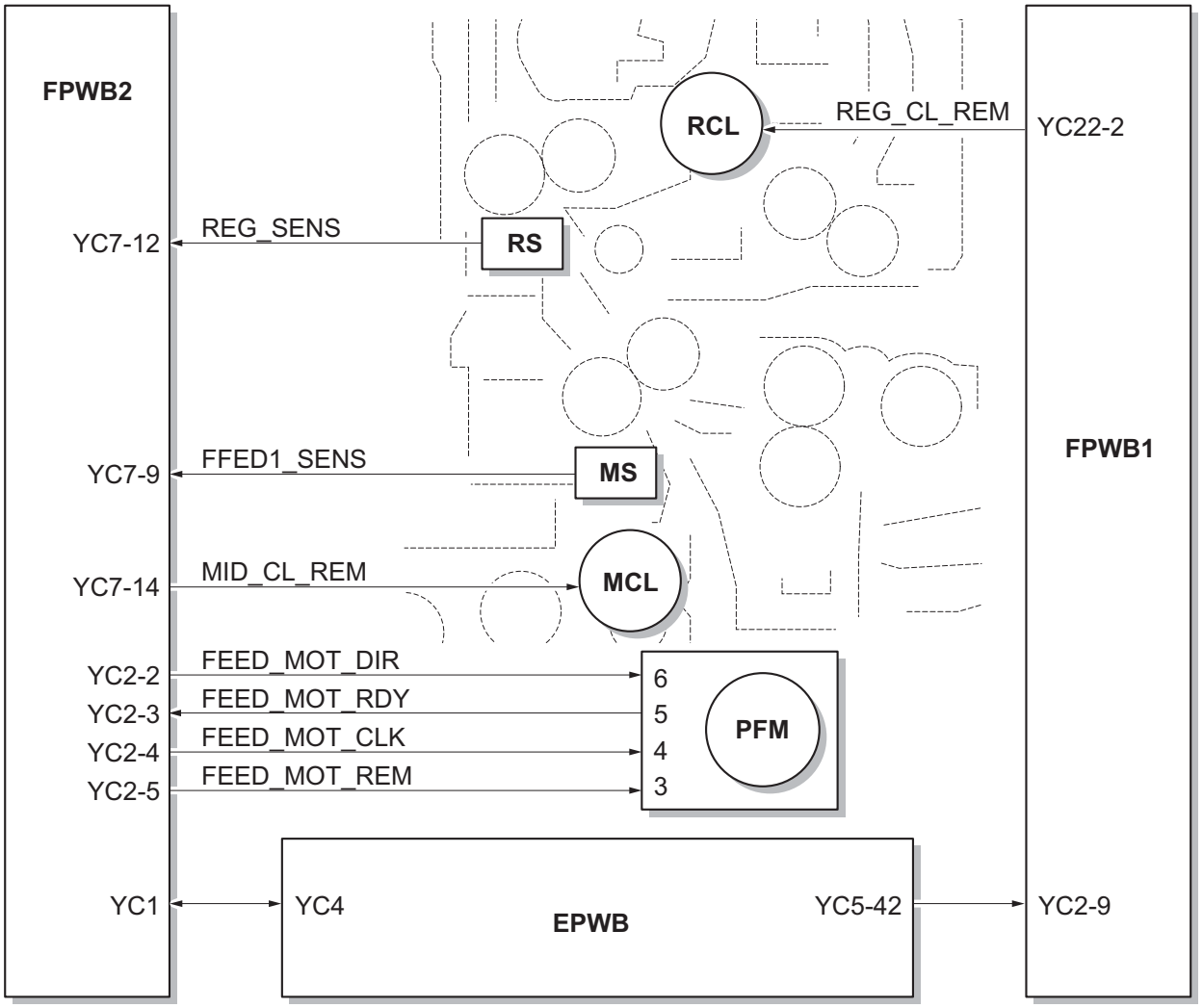

Figure 2-1-6 Paper conveying section block diagram (30 ppm/35 ppm model)

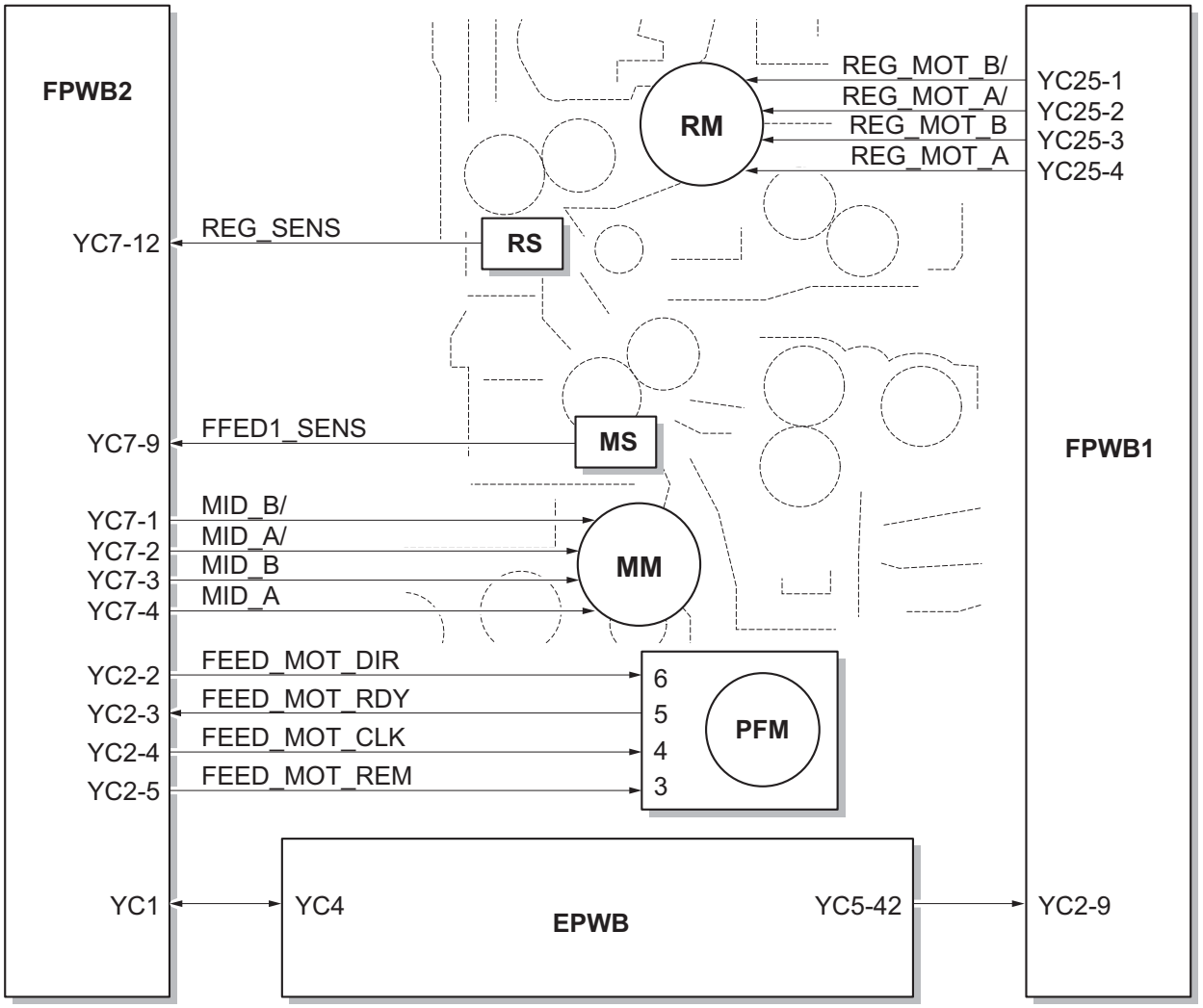

Figure 2-1-7 Paper conveying section block diagram (45 ppm/55 ppm model)

2-1-2 Drum section

The drum section consists of the charger roller unit, drum and cleaning section. The drum is electrically charged uniformly by means of a charger roller to form a latent image on the surface. The cleaning section consists of the cleaning blade and the cleaning roller which remove residual toner from the drum surface after transfer. The cleaning lamp (CL) consists of LEDs and removes residual charge on the drum before main charging.

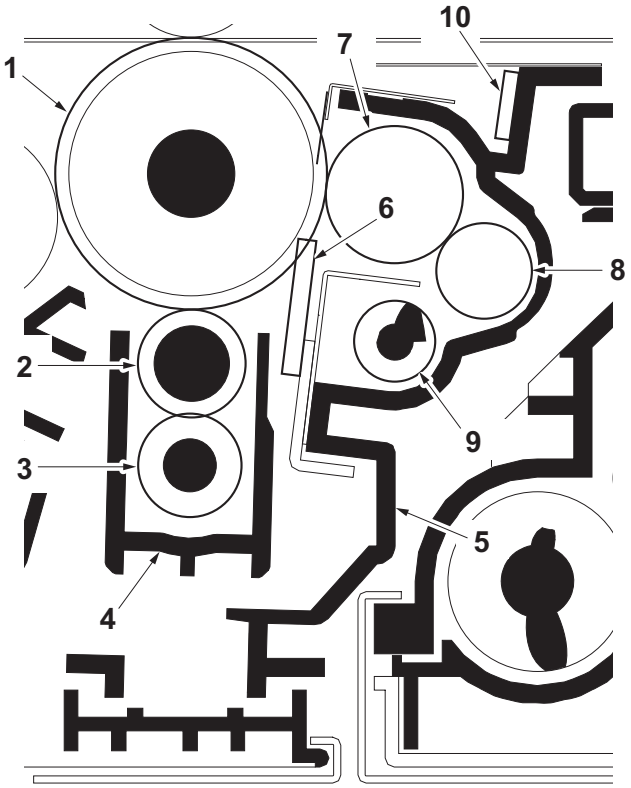

Figure 2-1-8 Drum section

1. Drum
2. Charger roller
3. Charger cleaning roller
4. Charger case
5. Drum frame
6. Cleaning blade
7. Cleaning roller
8. Control roller
9. Drum screw
10. Cleaning lamp (CL)

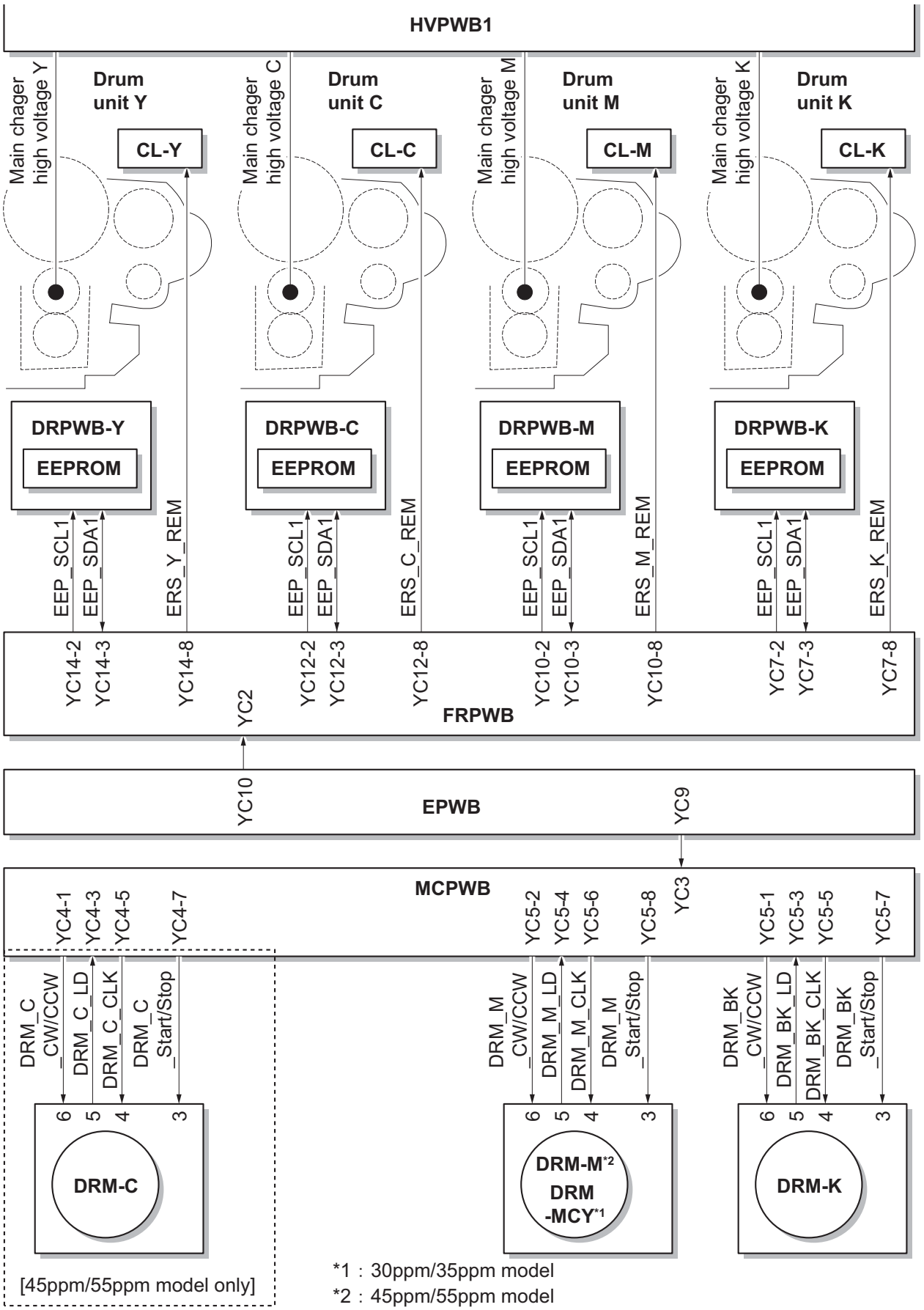

Figure 2-1-9 Drum section block diagram

2-1-3 Developer section

The developer unit consists of the sleeve roller that forms the magnetic brush, the magnet roller, the developer blade and the developer screws that agitate the toner. Also, the toner sensor (TS) checks whether or not toner remains in the developer unit.

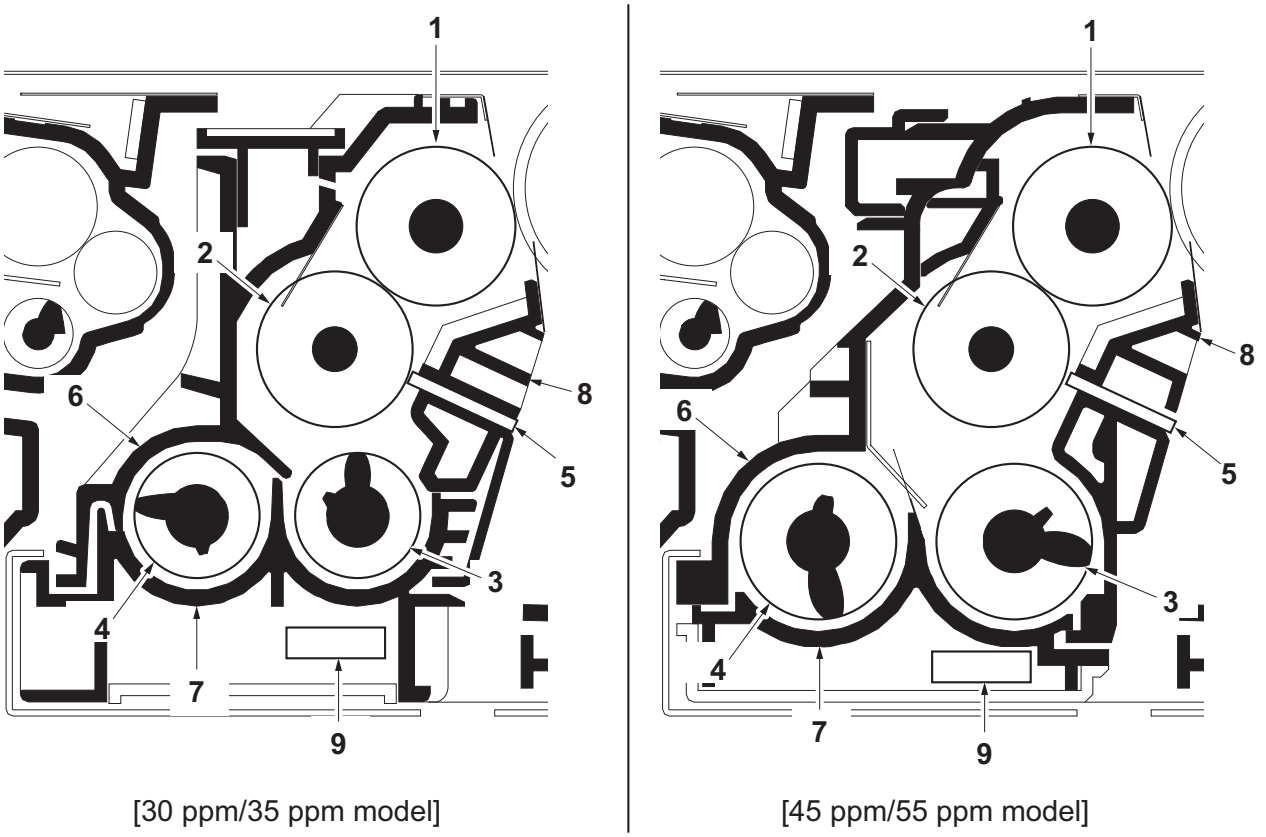

Figure 2-1-10 Developer section

1. Sleeve roller
2. Magnet roller
3. Developer screw A
4. Developer screw B
5. Developer blade
6. Developer case
7. Developer cover
8. Magnet cover
9. Toner sensor (TS)

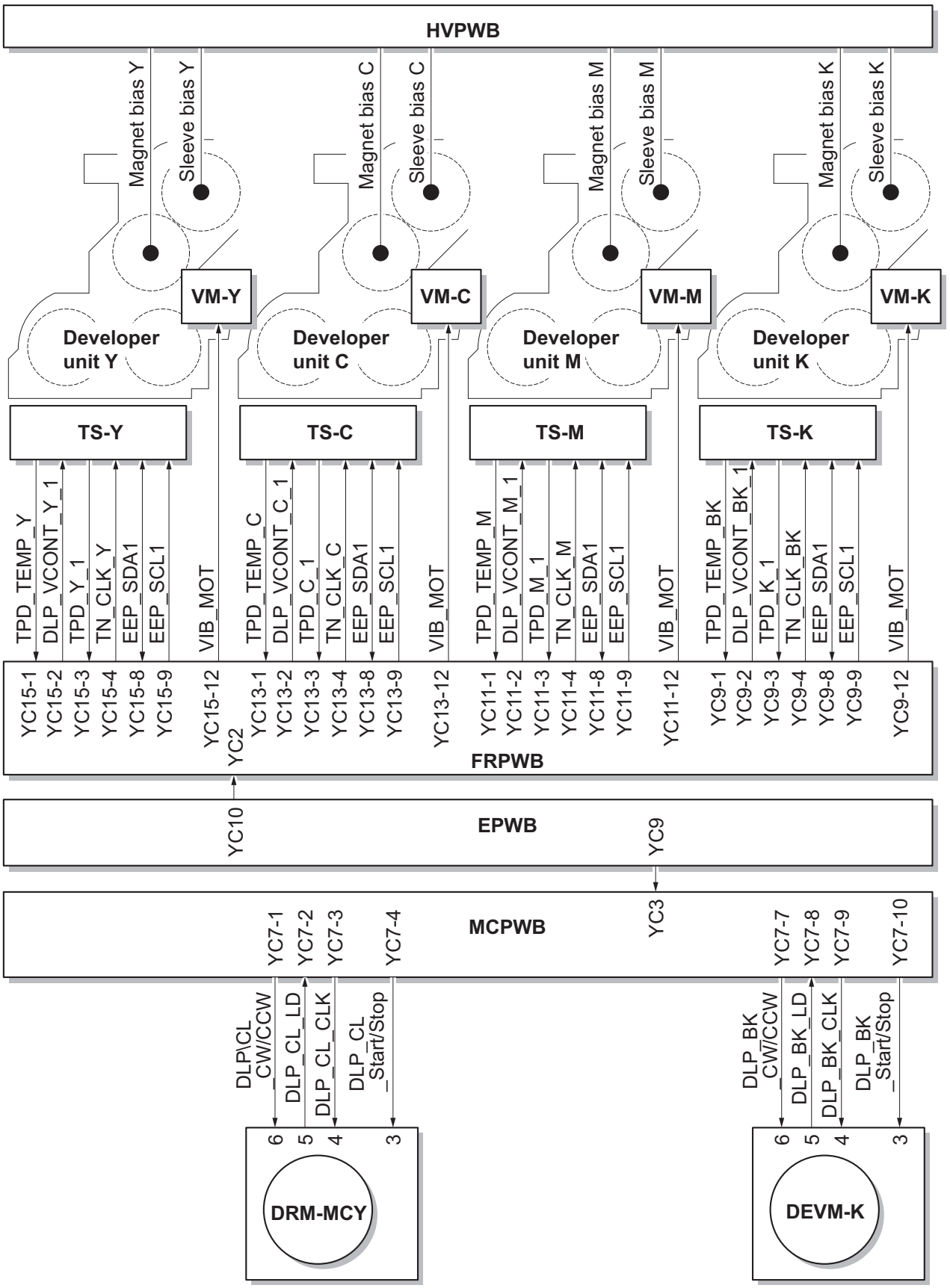

Figure 2-1-11 Developer section block diagram

2-1-4 Optical section

The optical section consists of the image scanner section for scanning and the laser scanner section for printing.

(1) Image scanner section

The original image is illuminated by the LED lamp and scanned by the CCD image sensor in the CCD PWB (CCDPWB) via the three mirrors and ISU lens, the reflected light being converted to an electrical signal.
The mirror frame A and B travel to scan on the optical rails on the front and rear of the machine to scan from side to side. The speed of the mirror frame B is half the speed of the mirror frame A.

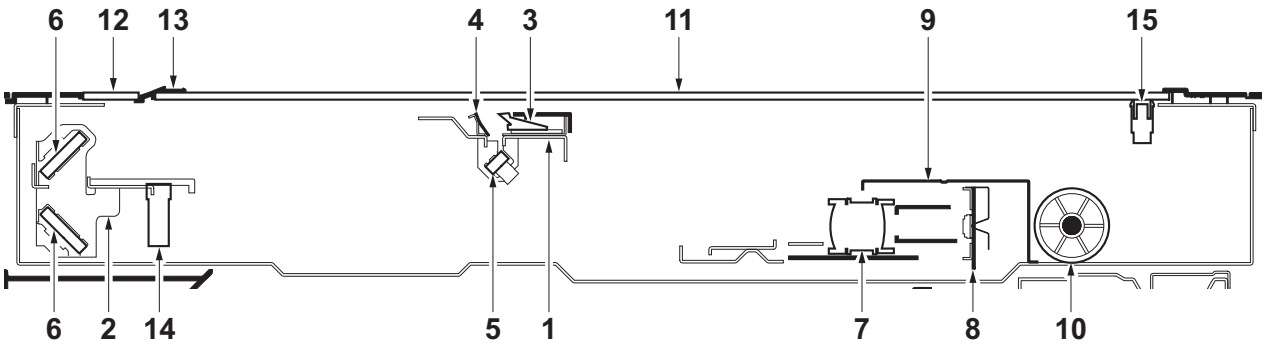

Figure 2-1-12 Image scanner section

1. Mirror frame A
2. Mirror frame B
3. LED mount
4. Scanner reflector
5. Mirror A
6. Mirror B
7. ISU lens
8. CCD PWB (CCDPWB)
9. ISU cover
10. Scanner wire drum
11. Contact glass
12. Slit glass
13. Original size indicator plate
14. Home position sensor (HPS)
15. Original detection switch (ODSW)

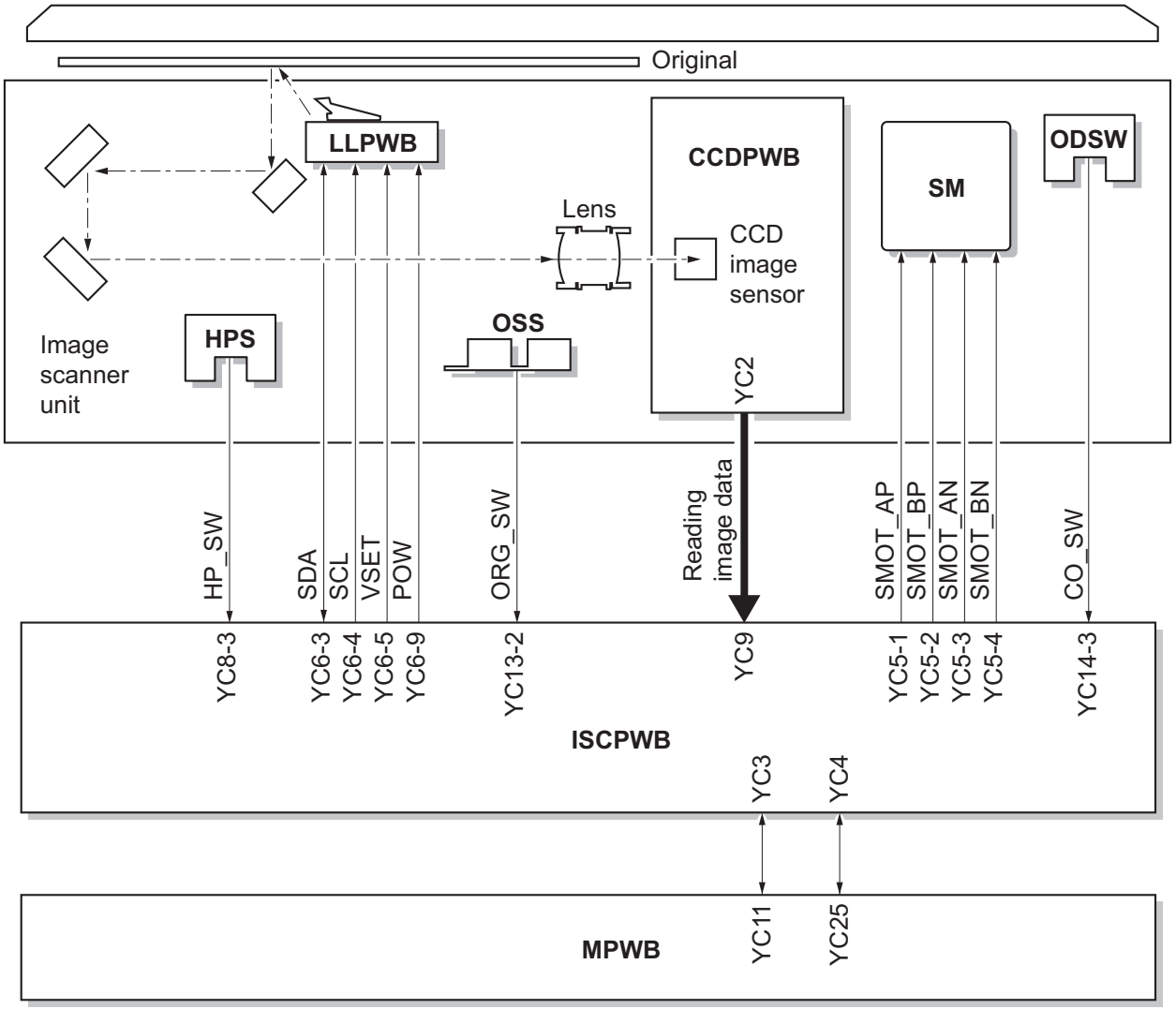

Figure 2-1-13 Image scanner section block diagram

(2) Laser scanner section

The charged surface of the drum is then scanned by the laser beam from the laser scanner unit. The laser beam is dispersed as the polygon motor (PM) revolves to reflect the laser beam over the drum. Various lenses and mirror are housed in the laser scanner unit, adjust the diameter of the laser beam, and focalize it at the drum surface. Also the LSU cleaning motor (LSUCM) is activated to conduct automatically cleaning of the LSU dust shield glass.

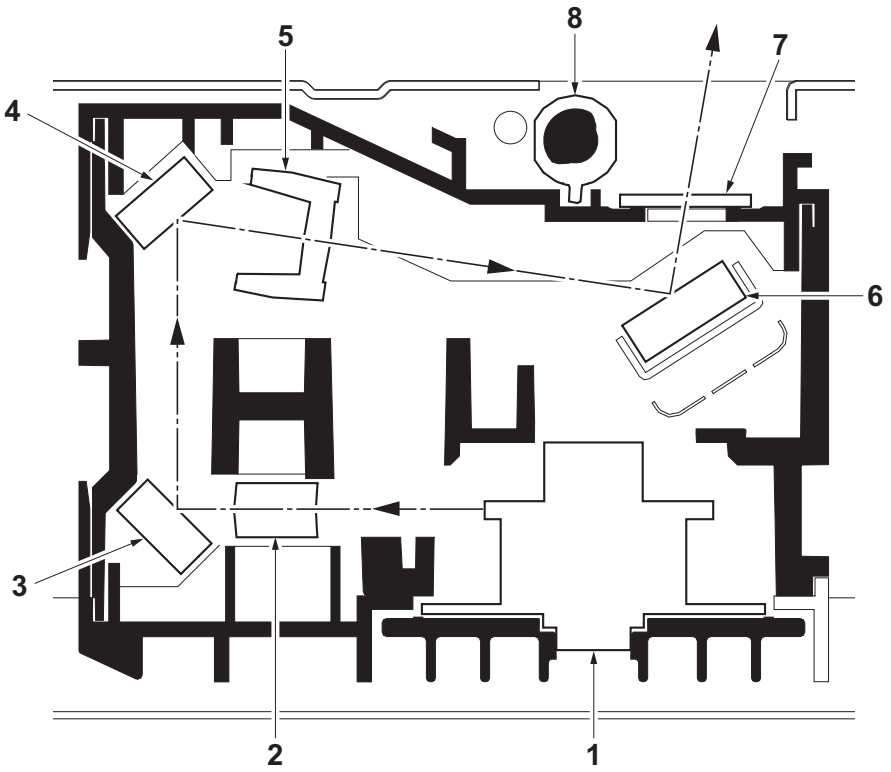

Figure 2-1-14 Laser scanner section

1. Polygon motor (PM)
2. f-θ lens A
3. Mirror A
4. Mirror B
5. f-θ lens B
6. Mirror C
7. LSU dust shield glass
8. LSU spiral

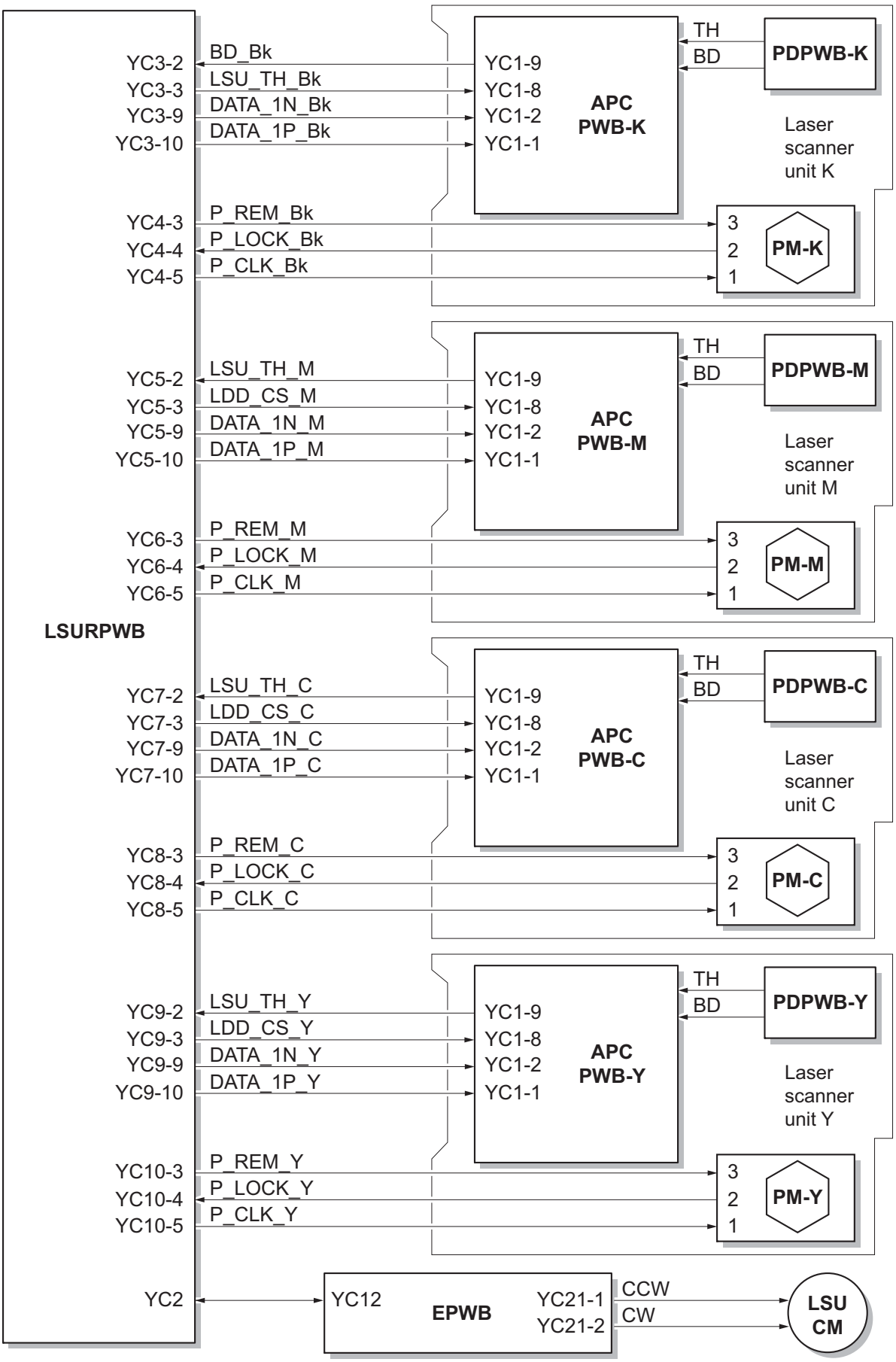

Figure 2-1-15 Laser scanner unit block diagram (30 ppm model)

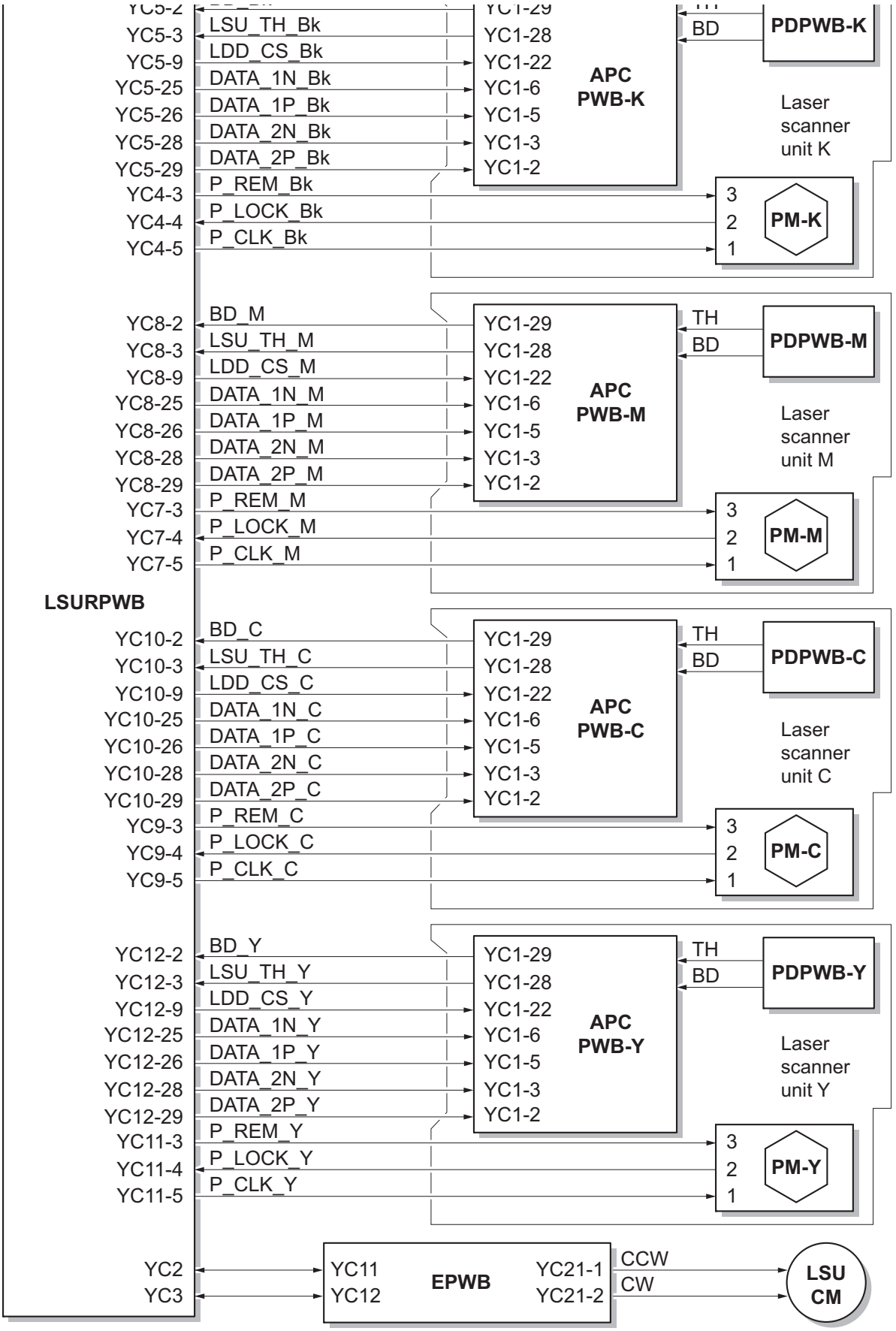

Figure 2-1-16 Laser scanner unit block diagram (35 ppm/45 ppm/55 ppm model)

2-1-5 Transfer/Separation section

The transfer/separation section consists of the intermediate transfer unit section and the secondary transfer roller section.

(1) Intermediate transfer unit section

The intermediate transfer unit section consists of the transfer cleaning unit, the transfer belt, and the four primary transfer rollers for respective color drums, and forms a full-color toner image by superimposing and transferring single-color toner images formed on each drum onto the transfer belt. Also with the ID sensors (IDS) mounted on the machine frame, the toner density on the transfer belt is measured.
The transfer cleaning unit collects toner remaining on the transfer belt after secondary transfer and forwards it as waste toner to the waste toner box.

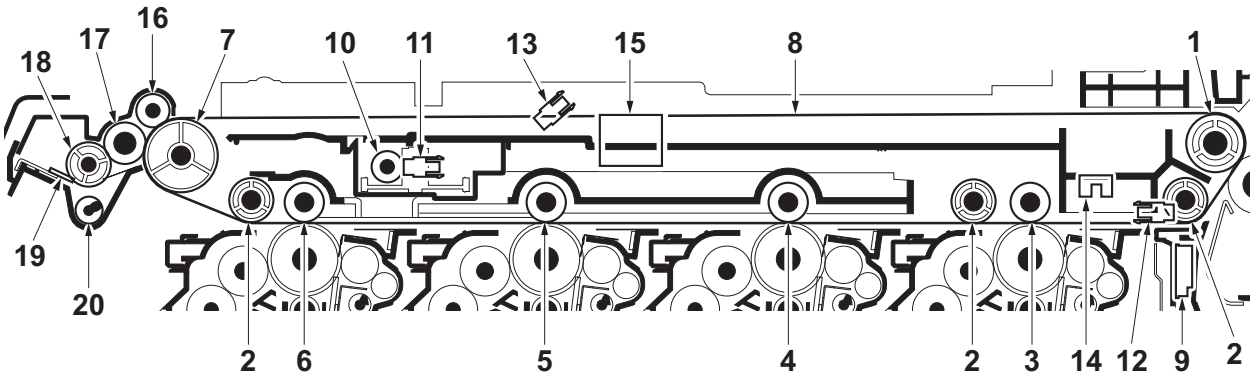

Figure 2-1-17 Intermediate transfer unit section

1. Drive roller
2. Backup roller
3. Primary transfer roller K
4. Primary transfer roller M
5. Primary transfer roller C
6. Primary transfer roller Y
7. Tension roller
8. Transfer belt
9. ID sensor (IDS)
10. Color release motor (CRM)
11. Color release sensor (CRS)
12. Transfer belt sensor (TRBLS)
13. Transfer skew sensor (TRSS)
14. Transfer edge sensor (TRES)
15. Transfer skew motor (TRSM)
16. Cleaning pre brush
17. Cleaning fur brush
18. Cleaning roller
19. Cleaning blade
20. Cleaning screw

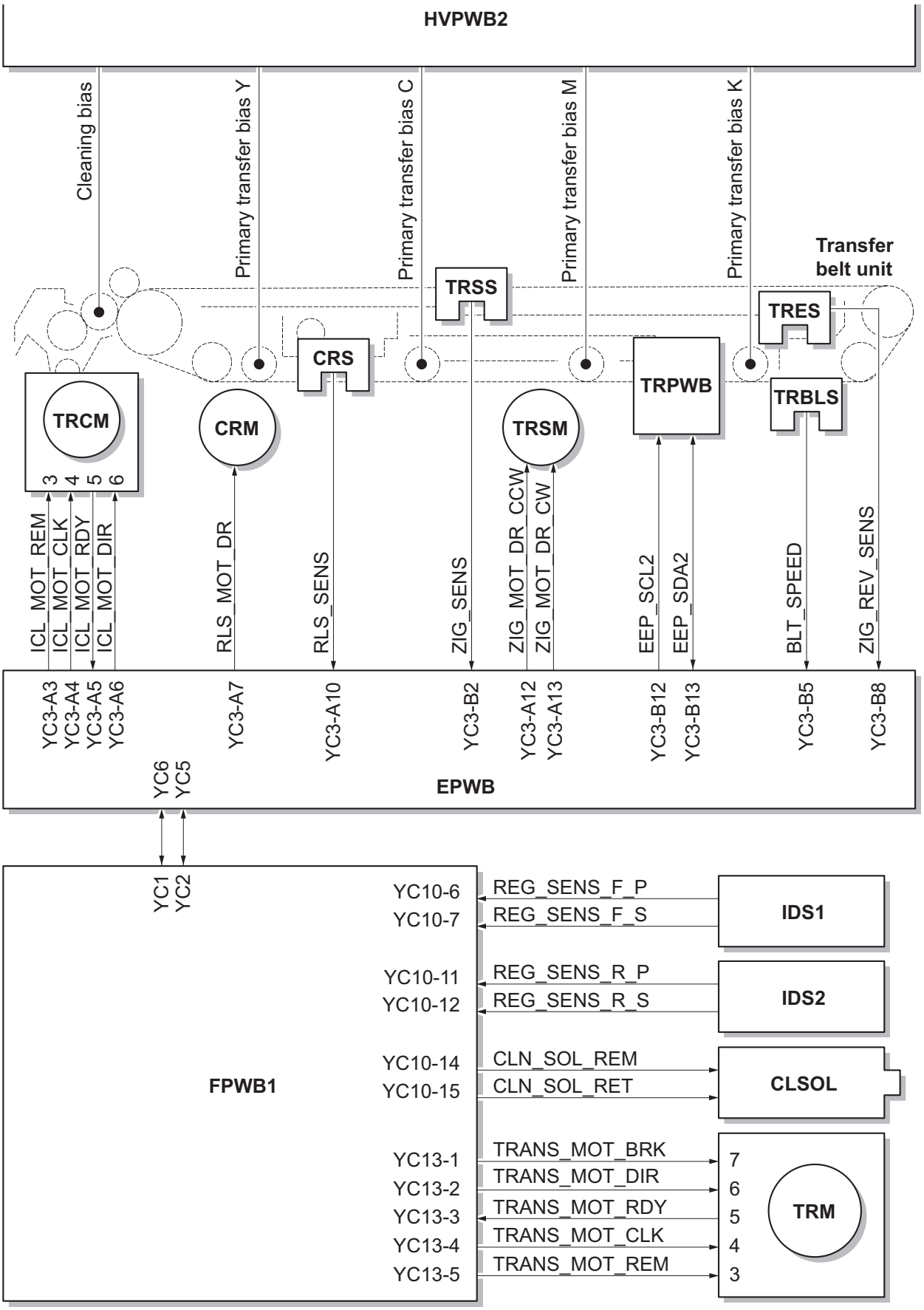

Figure 2-1-18 Intermediate transfer unit section block diagram

(2) Secondary transfer roller section

The secondary transfer roller section consists of the secondary transfer roller mounted to the paper conveying unit and the separation brush. To the secondary transfer roller, DC bias is applied from the high voltage PWB 2 (HVPWB2). The toner image formed on the transfer belt is transferred to the paper by the potential difference and the paper is separated by curvature separation.

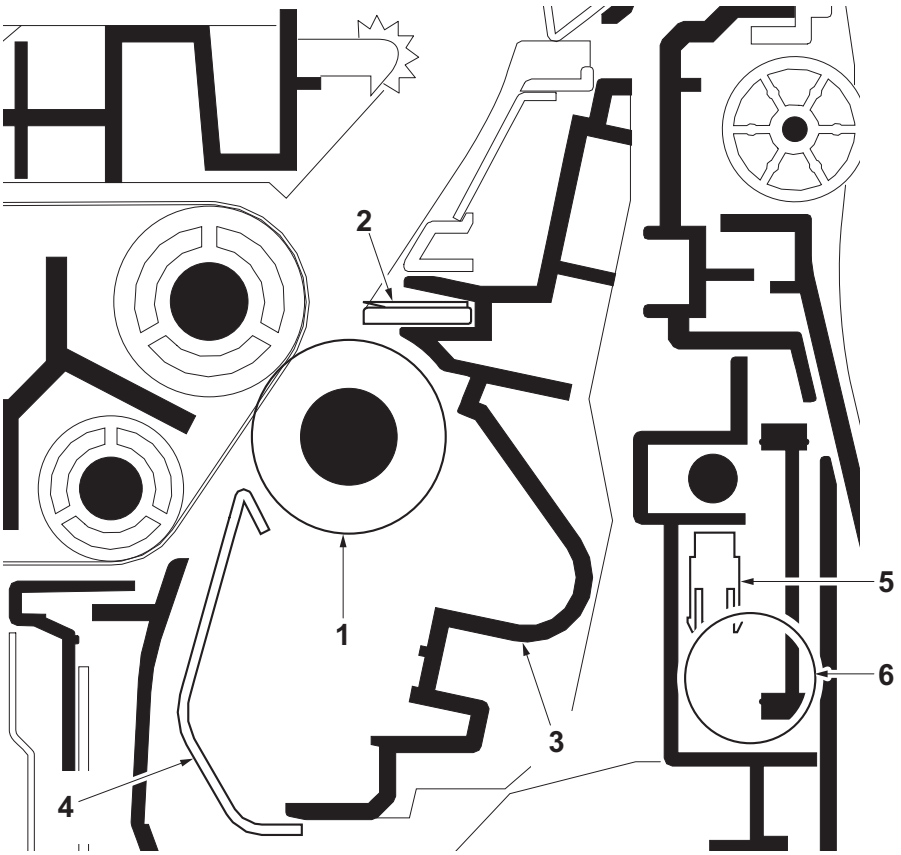

Figure 2-1-19 Secondary transfer roller section

1. Secondary transfer roller
2. Separation brush
3. Secondary transfer frame
4. Transfer guide
5. Transfer release sensor (TRRS)
6. Transfer release motor (TRRM)

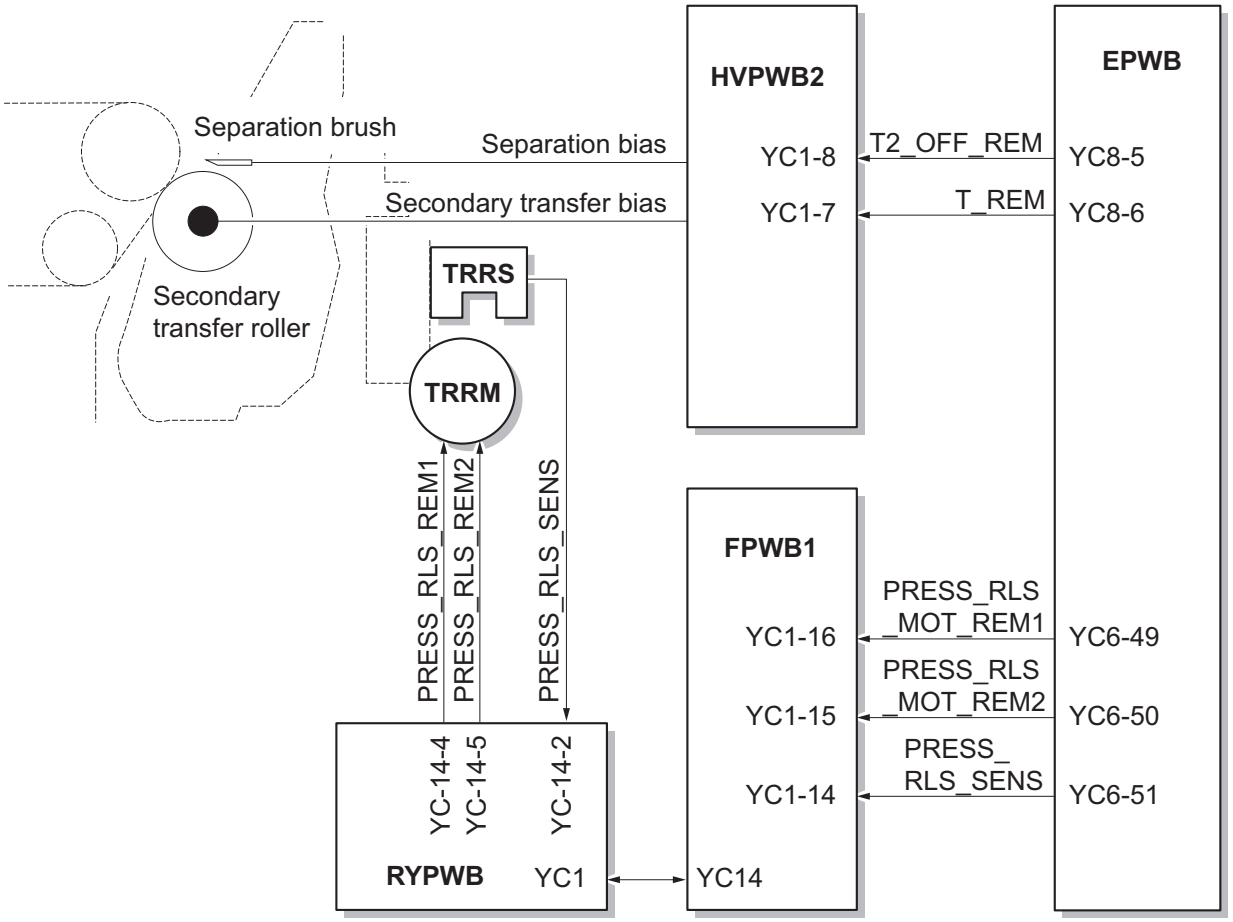

Figure 2-1-20 Secondary transfer roller section block diagram

2-1-6 Fuser section

The paper sent from the transfer/separation section is interleaved between the heat roller and the press roller. The heat roller (fuser belt) is heated by the fuser IH (FIH), and the toner is fused by heat and pressure and fixed onto the paper because the press roller is pressed by the fuser press spring. The surface temperature of heat roller and press roller are detected by the fuser thermistor (FTH) and controlled by the engine PWB (EPWB).

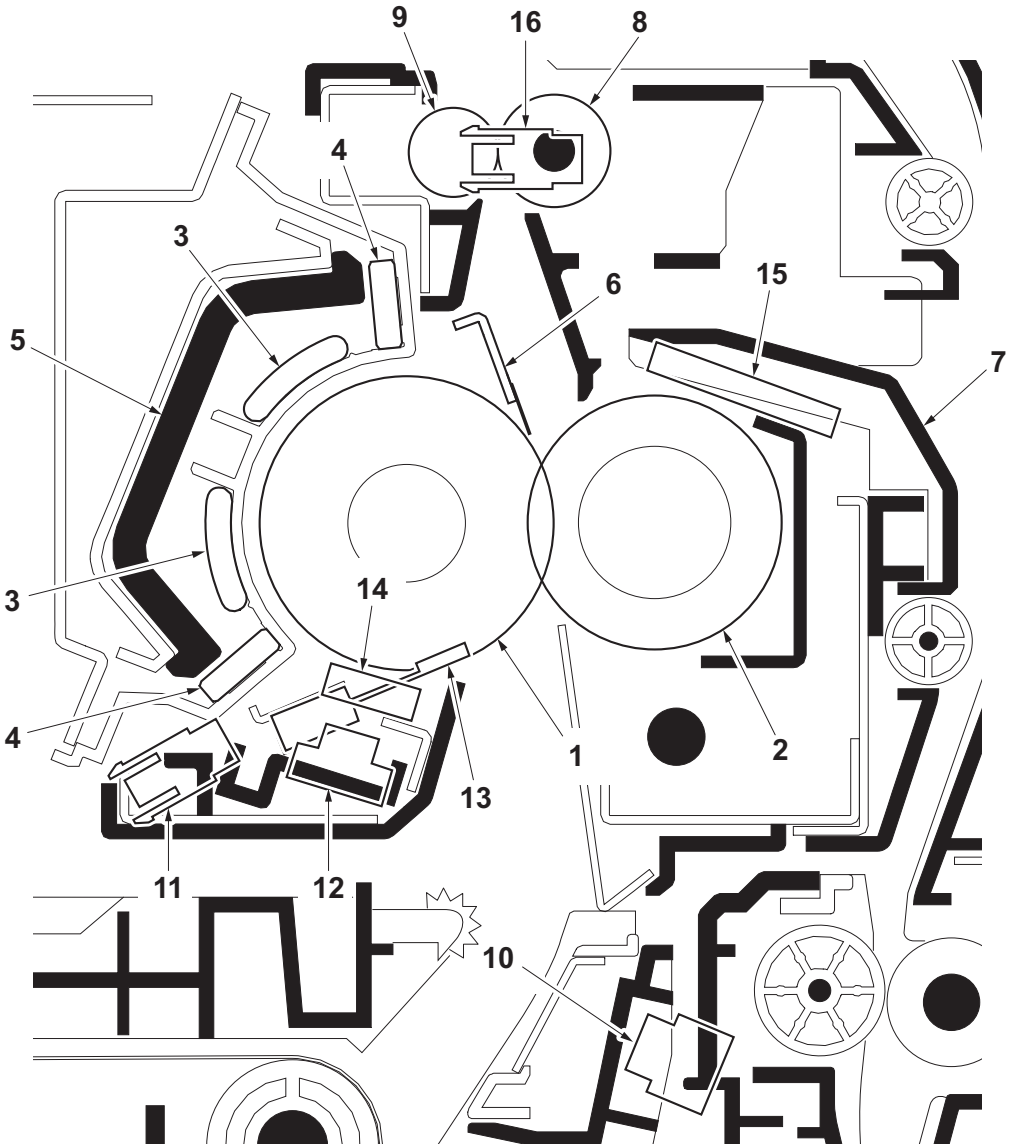

Figure 2-1-21 Fuser section

1. Heat roller (Fuser belt)
2. Press roller
3. IH coils
4. Side core
5. Arch core
6. Separators
7. Right fuser cover
8. Fuser eject pulley
9. Fuser eject roller
10. Loop sensor (LPS)
11. Fuser belt sensor (FUBLS)
12. Fuser thermistor 1 (FTH1)
13. Fuser thermistor 2 (FTH2)
14. Fuser thermistor 3 (FTH3)
15. Fuser thermistor 4 (FTH4)
16. Fuser eject sensor (FUES)

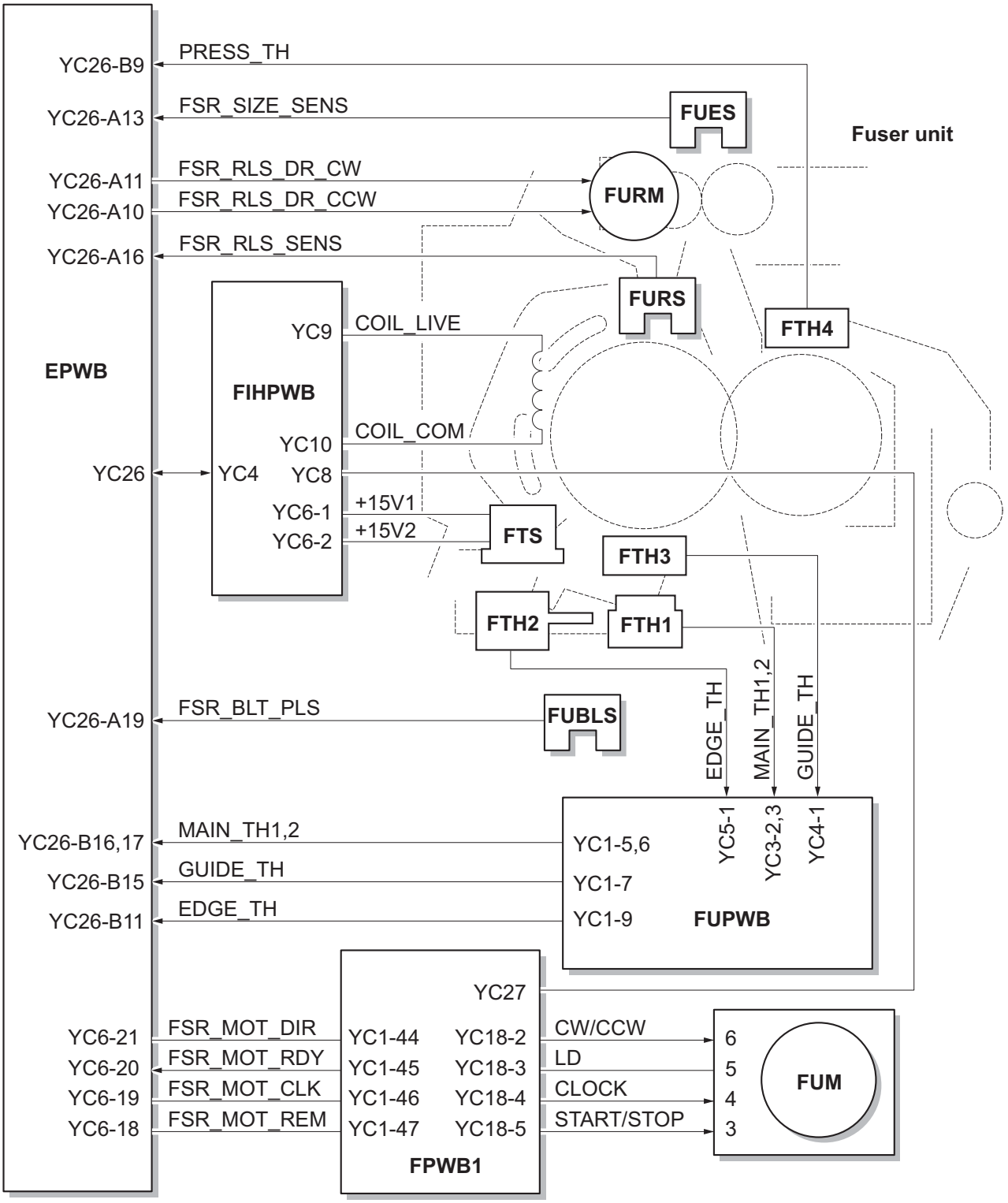

Figure 2-1-22 Fuser section block diagram

2-1-7 Eject/Feedshift section

The paper eject/feedshift section consists of the conveying path which sends the paper that has passed the fuser section to the top tray, duplex conveying section or job separator.

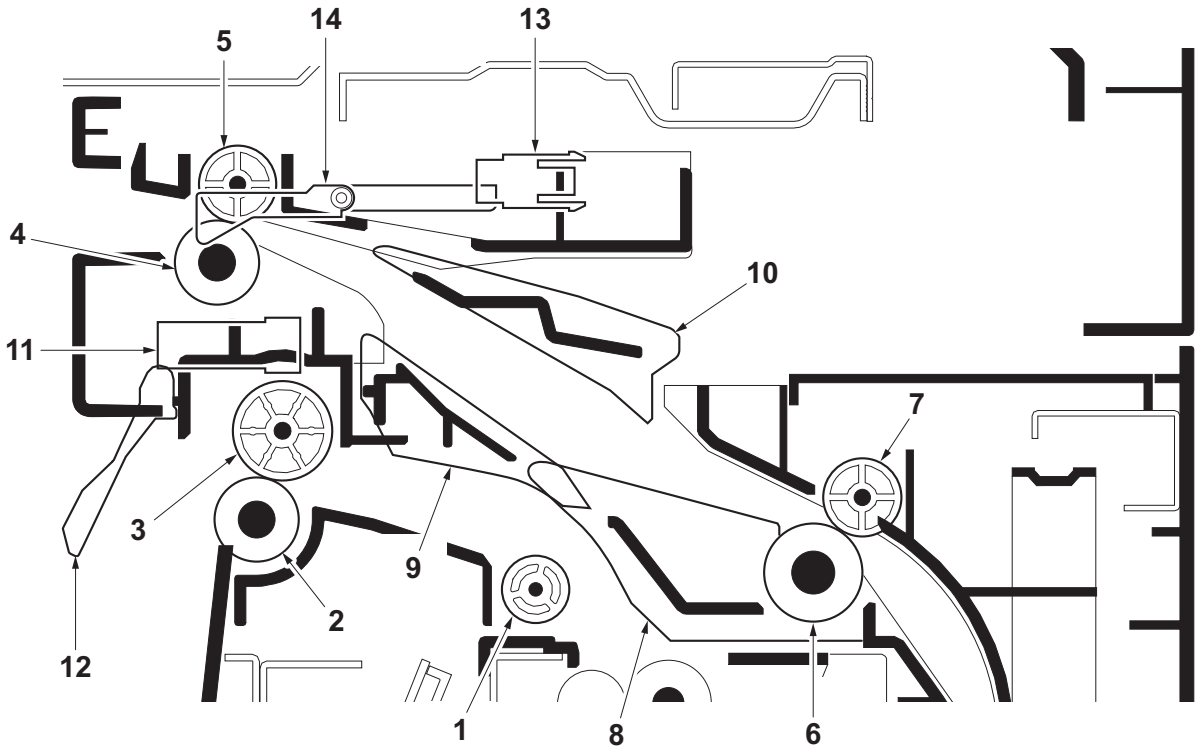

Figure 2-1-23 Eject/Feed shift section

1. Middle pulley
2. Eject roller
3. Eject pulley
4. Eject roller B
5. Eject pulley B
6. Upper duplex roller
7. Duplex pulley
8. Lower duplex roller
9. Lower change guide
10. Upper change guide
11. Eject full sensor (EFS)
12. Actuator (eject full sensor)
13. Switchback sensor (SBS)
14. Actuator (switchback sensor)

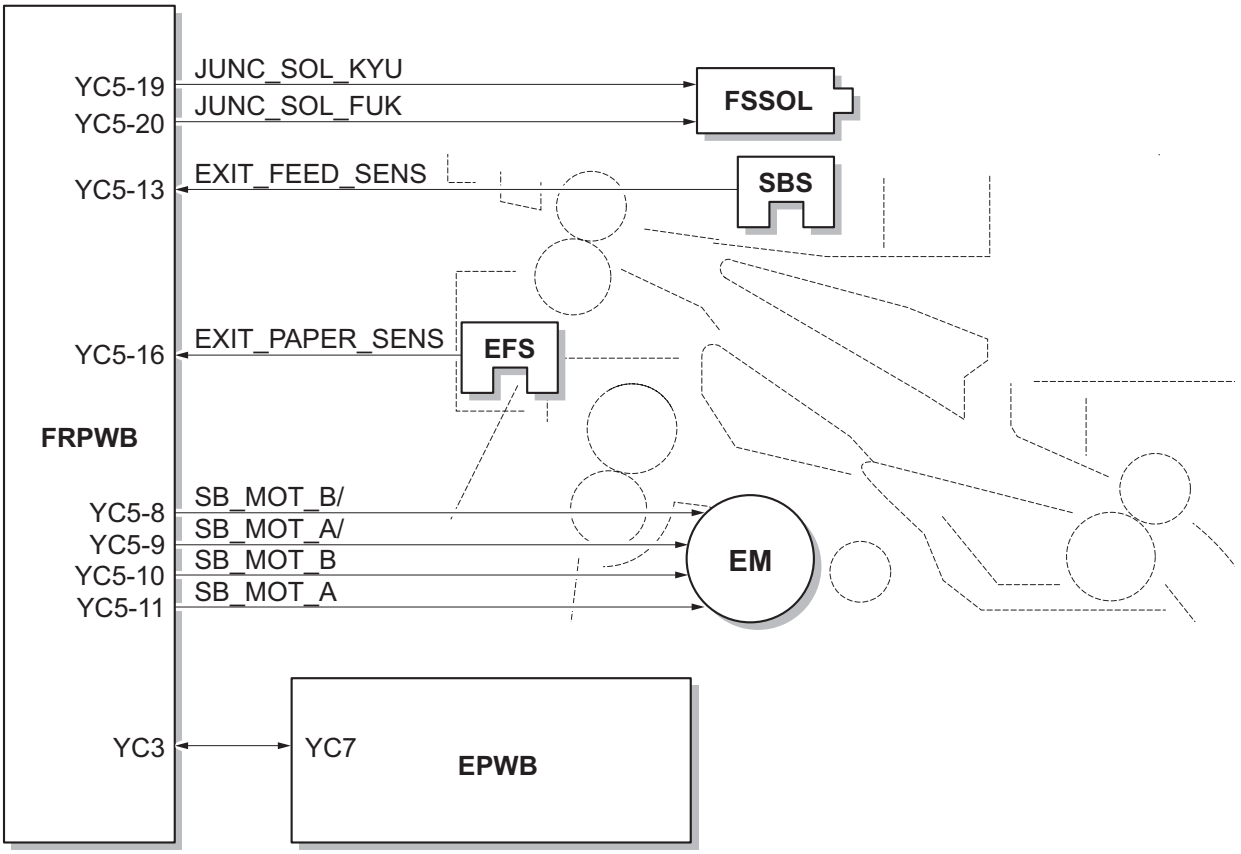

Figure 2-1-24 Eject/Feed shift section block diagram

2-1-8 Duplex conveying section

The duplex conveying section consists of conveying path which sends the paper sent from the eject/feedshift section to the paper feed/conveying section when duplex printing.

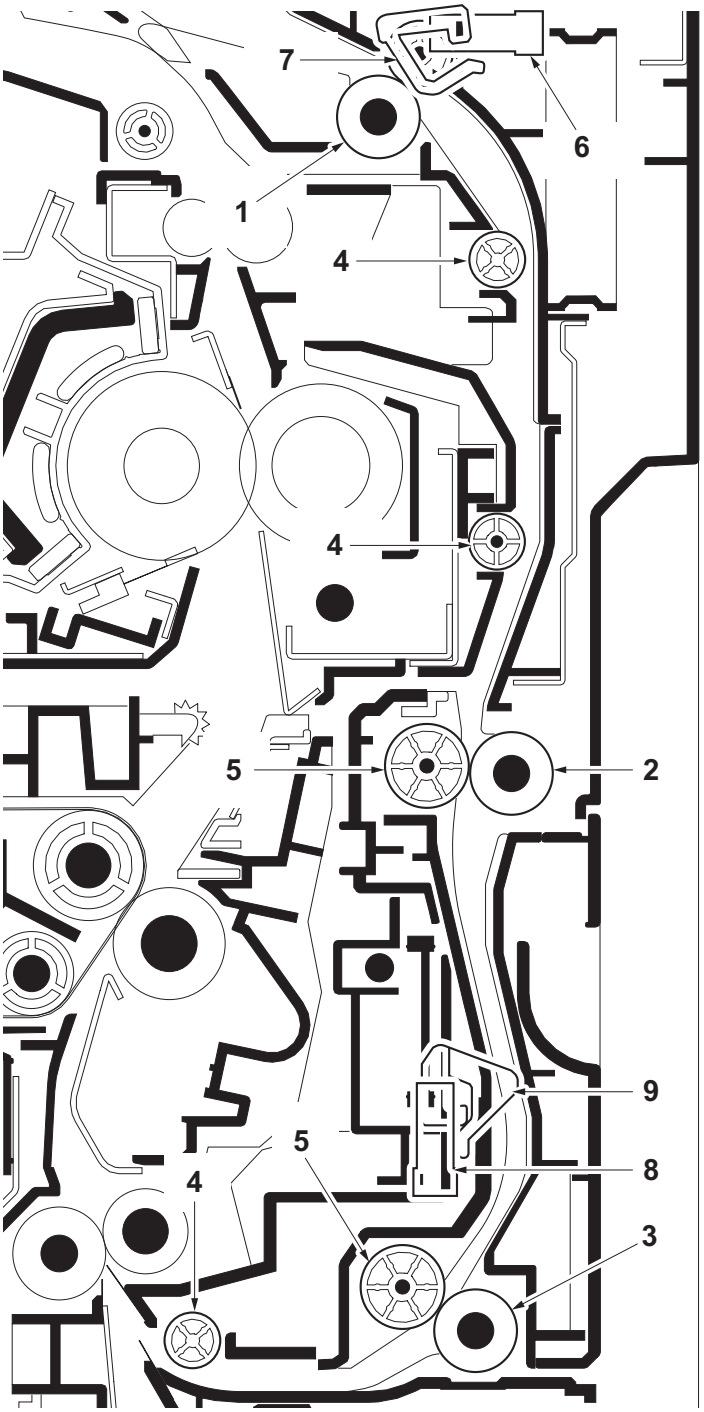

Figure 2-1-25 Duplex conveying section

1. Upper duplex roller
2. Middle duplex roller
3. Lower duplex roller
4. Duplex pulleys A
5. Duplex pulleys B
6. Duplex sensor 1 (DUS1)
7. Actuator (duplex sensor 1)
8. Duplex sensor 2 (DUS2)
9. Actuator (duplex sensor 2)

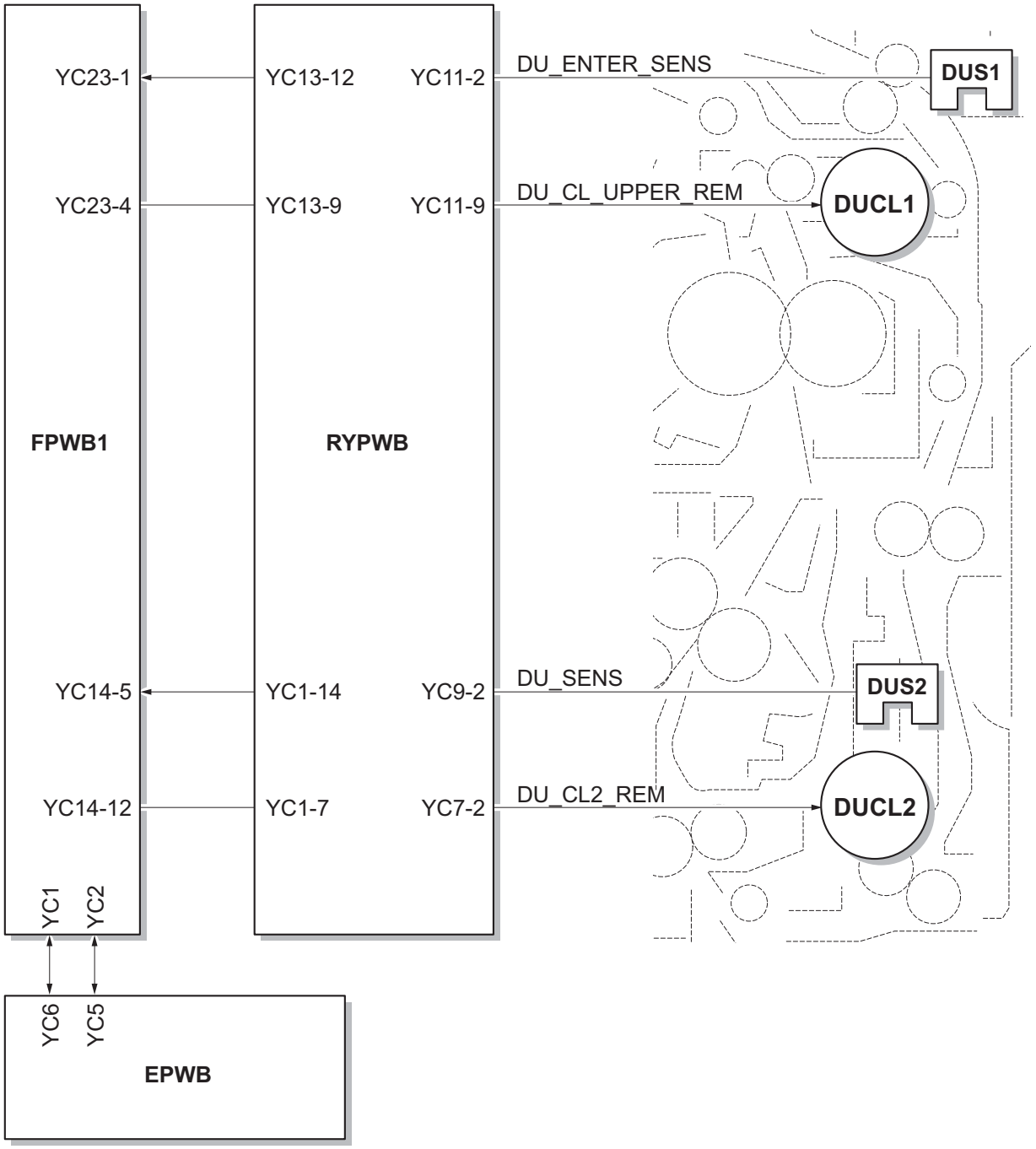

Figure 2-1-26 Duplex conveying section block diagram (30 ppm/35 ppm model)

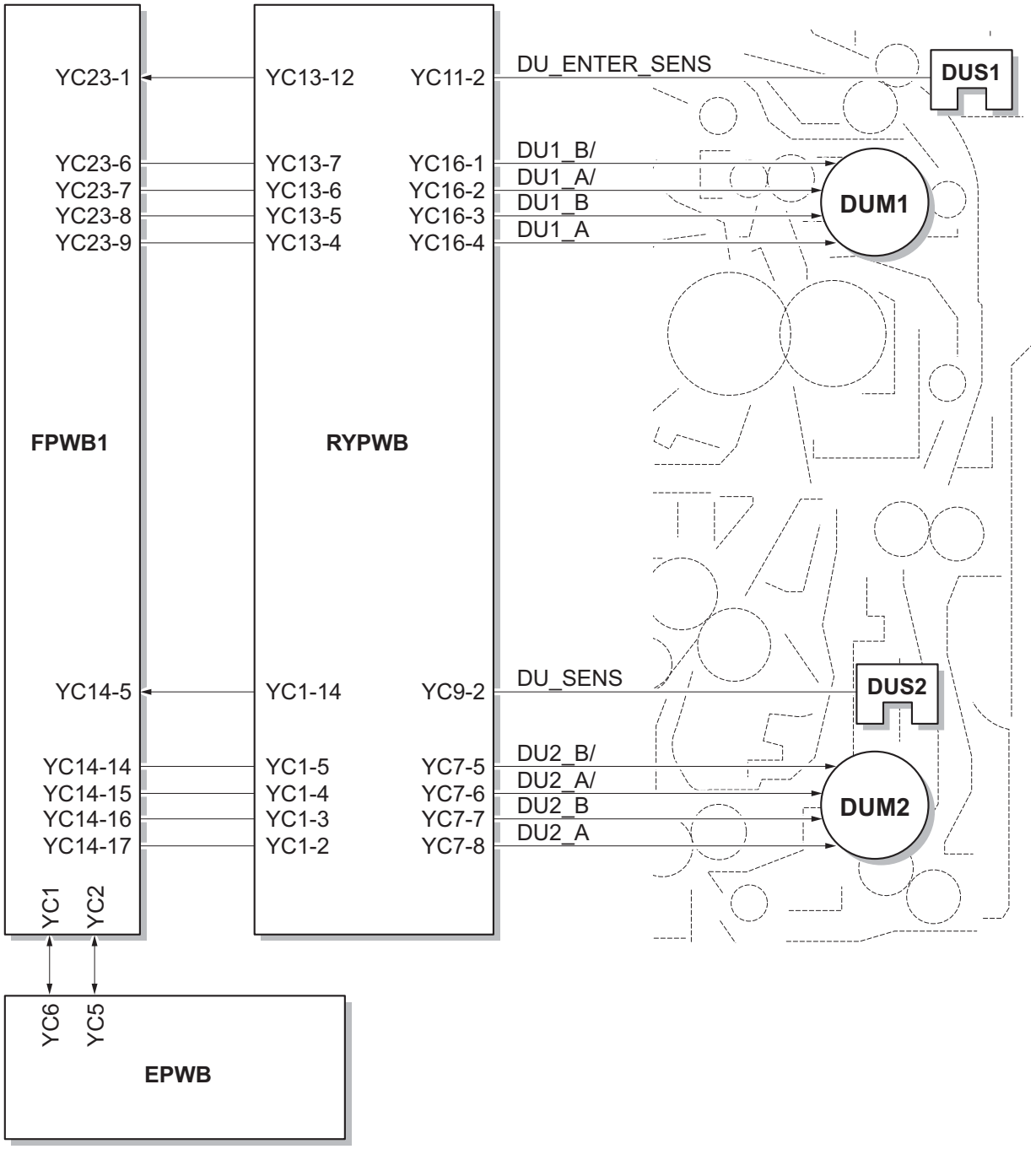

Figure 2-1-27 Duplex conveying section block diagram (45 ppm/55 ppm model)

This page is intentionally left blank.

2-2-1 Electrical parts layout

(1) PWBs

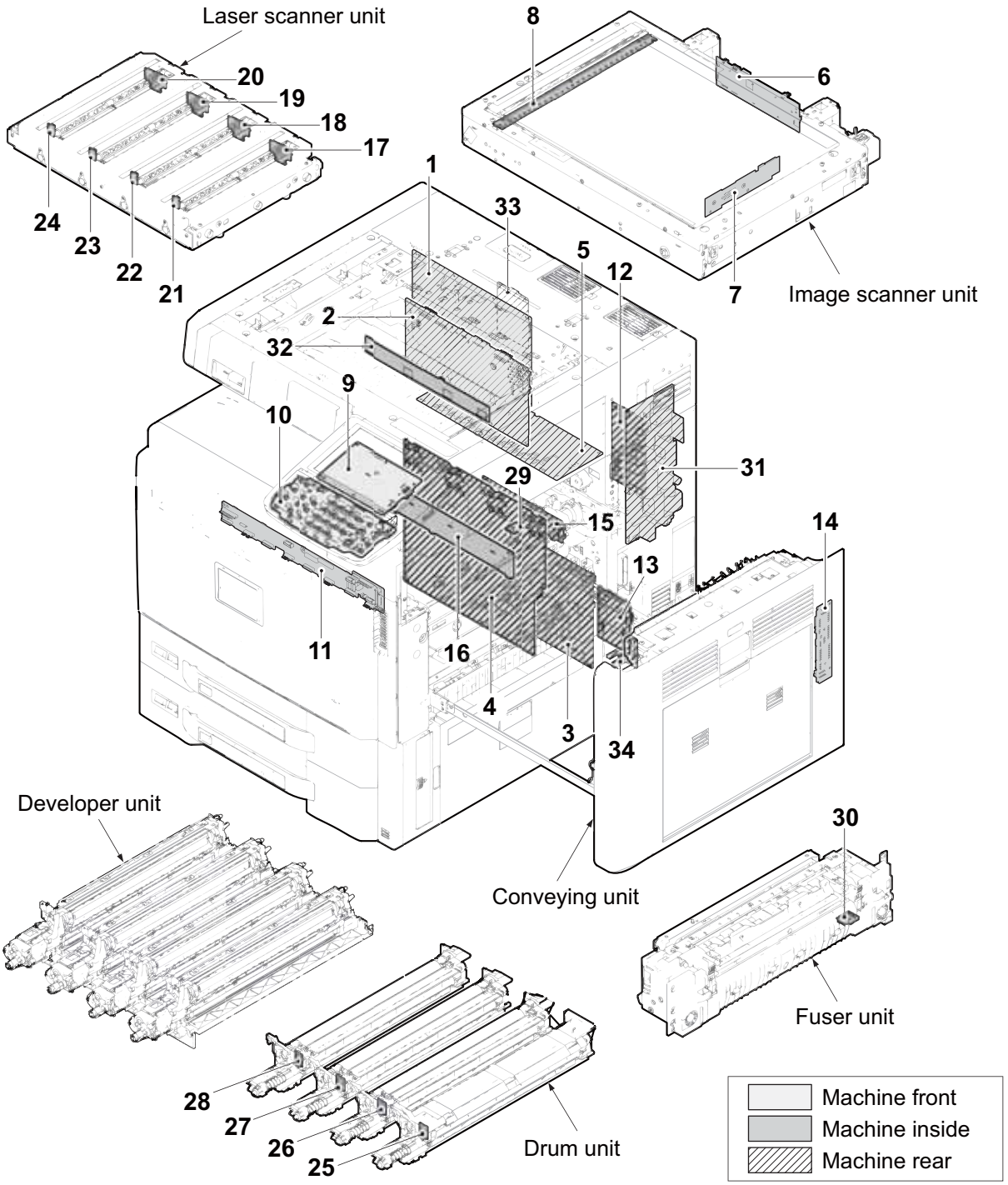

Figure 2-2-1 PWBs

1. Main PWB (MPWB) ..... Controls the software such as the print data processing and provides the interface with computers.
2. Engine PWB (EPWB)..... Controls printer hardware such as high voltage/bias output control, paper conveying system control, and fuser temperature control, etc.
3. Power source PWB (PSPWB) ..... After full-wave rectification of AC power source input, switching for converting to 24 V DC and 5 V DC for output.
4. High voltage PWB 1 (HVPWB1) ..... Generates main charging and developer bias.
5. High voltage PWB 2 (HVPWB2) ..... Generates transfer bias and separation bias.
6. ISC PWB (ISCPWB) ..... Controls the scanner section.
7. CCD PWB (CCDPWB)..... Reads the image of originals.
8. LED lamp PWB (LLPWB) ..... Exposes originals.
9. Operation PWB 1 (OPWB1)..... Controls touch panel and LCD indication.
10. Operation PWB 2 (OPWB2)..... Consists of the LED indicators and key switches.
11. Front PWB (FRPWB)..... Consists of wiring relay circuit between engine PWB and drum units, developer units, eject unit.
12. Feed PWB 1 (FPWB1)..... Consists of wiring relay circuit between engine PWB and fuser drive unit, relay PWB.
13. Feed PWB 2 (FPWB2)..... Consists of wiring relay circuit between engine PWB and paper conveying section, drive section.
14. Relay PWB (RPWB) ..... Consists of wiring relay circuit between feed PWB 1 and paper conveying unit.
15. Motor control PWB (MCPWB)..... Consists of wiring relay circuit between engine PWB and drum motors, developer motors.
16. LSU relay PWB (LSURPWB)..... Consists of wiring relay circuit between engine PWB and laser scanner unit.
17. APC PWB K (APCPWB-K) ..... Generates and controls the laser beam (black).
18. APC PWB M (APCPWB-M) ..... Generates and controls the laser beam (magenta).
19. APC PWB C (APCPWB-C)..... Generates and controls the laser beam (cyan).
20. APC PWB Y (APCPWB-Y) ..... Generates and controls the laser beam (yellow).
21. PD PWB K (PDPWB-K) ..... Controls horizontal synchronizing timing of laser beam (black).
22. PD PWB M (PDPWB-M)..... Controls horizontal synchronizing timing of laser beam (magenta).
23. PD PWB C (PDPWB-C)..... Controls horizontal synchronizing timing of laser beam (cyan).
24. PD PWB Y (PDPWB-Y) ..... Controls horizontal synchronizing timing of laser beam (yellow).
25. Drum PWB K (DRPWB-K) ..... Drum individual information in EEPROM storage.
26. Drum PWB M (DRPWB-M)..... Drum individual information in EEPROM storage.
27. Drum PWB C (DRPWB-C)..... Drum individual information in EEPROM storage.
28. Drum PWB Y (DRPWB-Y) ..... Drum individual information in EEPROM storage.
29. Transfer PWB (TRPWB) ..... Transfer belt individual information in EEPROM storage.
30. Fuser PWB (FUPWB) ..... Relays wirings from electrical components on the fuser unit.
31. Fuser IH PWB (FIHPWB)..... Controls the fuser IH.
32. RFID PWB (RFPWB)..... Reads the container information.
33. Interface PWB (IFPWB)..... Consists of wiring relay circuits between main PWB and Fax control PWB.
34. Current PWB (CRPWB)*..... Changes and outputs the AC current input to an analog signal.

List of correspondences of PWB names

No.	Name used in service manual	Name used in parts list
1	Main PWB (MPWB)	PARTS PWB MAIN ASSY SP
2	Engine PWB (EPWB)	PARTS PWB ENGINE ASSY SP
3	Power source PWB (PSPWB)	PARTS UNIT LOW VOLTAGE SP
4	High voltage PWB 1 (HVPWB1)	PARTS UNIT HIGH VOLTAGE MAIN SP
5	High voltage PWB 2 (HVPWB2)	PARTS UNIT HIGH VOLTAGE TRANSFER SP
6	ISC PWB (ISCPWB)	PARTS PWB ISC ASSY SP
7	CCD PWB (CCDPWB)	-
8	LED lamp PWB (LLPWB)	-
9	Operation PWB 1 (OPWB1)	PARTS PWB PANEL MAIN ASSY J SP
10	Operation PWB 2 (OPWB2)	PARTS PWB OPERATION ASSY SP
11	Front PWB (FRPWB)	PARTS PWB FRONT CLR ASSY SP
12	Feed PWB 1 (FPWB1)	PARTS PWB FEED 1 ASSY SP
13	Feed PWB 2 (FPWB2)	PARTS PWB FEED 2 ASSY SP
14	Relay PWB (RPWB)	PARTS PWB JUNCTION ASSY SP
15	Motor control PWB (MCPWB)	PARTS PWB MOTOR CONTROL ASSY SP
16	LSU relay PWB (LSURPWB)	PARTS PWB LSU JUNC CLR ASSY SP
17	APC PWB K (APCPWB-K)	-
18	APC PWB M (APCPWB-M)	-
19	APC PWB C (APCPWB-C)	-
20	APC PWB Y (APCPWB-Y)	-
21	PD PWB K (PDPWB-K)	-
22	PD PWB M (PDPWB-M)	-
23	PD PWB C (PDPWB-C)	-
24	PD PWB Y (PDPWB-Y)	-
25	Drum PWB K (DRPWB-K)	-
26	Drum PWB M (DRPWB-M)	-
27	Drum PWB C (DRPWB-C)	-
28	Drum PWB Y (DRPWB-Y)	-
29	Transfer PWB (TRPWB)	-
30	Fuser PWB (FUPWB)	-
31	Fuser IH PWB (FIHPWB)	-
32	RFID PWB (RFPWB)	PARTS PWB RFID ASSY SP
33	Interface PWB (IFPWB)	PARTS PWB KUIO ASSY SP
34	Current PWB (CRPWB)	PARTS PWB CURRENT AVE ASSY SP

(2) Switches and sensors

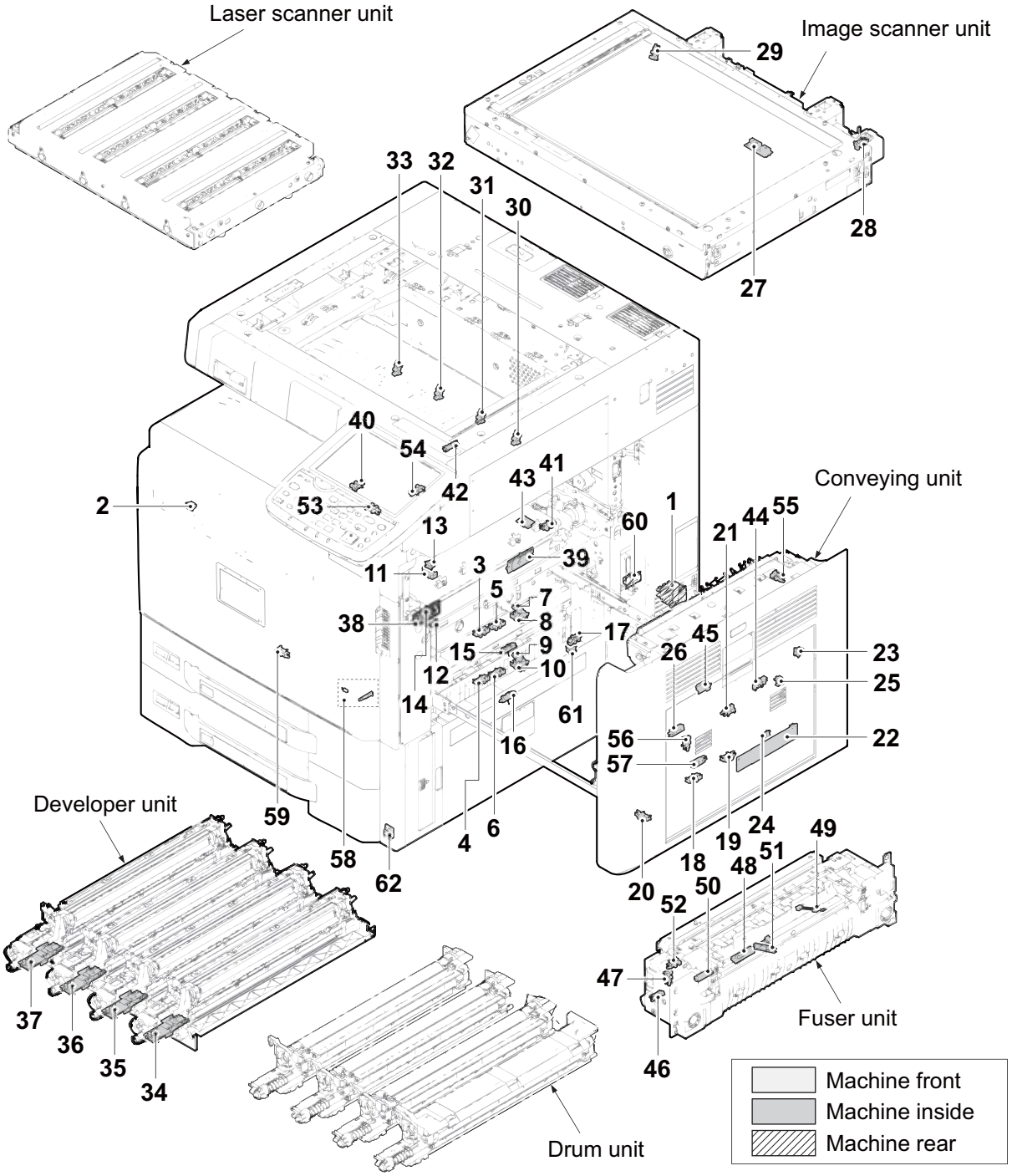

Figure 2-2-2 Switches and sensors

1. Main power switch (MSW) ..... Turns ON/OFF the AC power source.
2. Front cover switch (FRCSW) ..... Detects the opening and closing of the front cover.
3. Paper sensor 1 (PS1) ..... Detects the presence of paper (cassette 1).
4. Paper sensor 2 (PS2) ..... Detects the presence of paper (cassette 2).
5. Lift sensor 1 (LS1)..... Detects activation of upper limit of the bottom plate (cassette 1).
6. Lift sensor 2 (LS2)..... Detects activation of upper limit of the bottom plate (cassette 2).
7. Paper gauge sensor 1 (U) (PGS1(U))... Detects the paper gauge (cassette 1).
8. Paper gauge sensor 1 (L) (PGS1(L))..... Detects the paper gauge (cassette 1).
9. Paper gauge sensor 2 (U) (PGS2(U))... Detects the paper gauge (cassette 2).
10. Paper gauge sensor 2 (L) (PGS2(L))..... Detects the paper gauge (cassette 2).
11. Paper length switch 1 (PLSW1)..... Detects the length of paper (cassette 1).
12. Paper length switch 2 (PLSW2)..... Detects the length of paper (cassette 2).
13. Paper width switch 1 (PWSW1)..... Detects the width of paper (cassette 1).
14. Paper width switch 2 (PWSW2)..... Detects the width of paper (cassette 2).
15. Feed sensor 1 (FS1)..... Detects a paper misfeed in the paper feed section (cassette 1).
16. Feed sensor 2 (FS2)..... Detects a paper misfeed in the paper feed section (cassette 2).
17. Paper conveying sensor (PCS)..... Detects a paper misfeed in the vertical conveying section.
18. MP paper sensor (MPPS)..... Detects the presence of paper (MP tray).
19. MP lift sensor 1 (MPLS1)..... Detects activation of upper limit of the MP plate.
20. MP lift sensor 2 (MPLS2)..... Detects activation of lower limit of the MP plate.
21. MP paper length switch (MPPLSW)..... Detects the length of paper (MP tray).
22. MP paper width switch (MPPWSW)..... Detects the width of paper (MP tray).
23. MP tray switch (MPTSW)..... Detects the MP tray extension is extend.
24. MP feed sensor (MPFS) ..... Detects a paper misfeed in the MP paper feed section.
25. Middle sensor (MS)..... Detects a paper misfeed in the paper conveying section.
26. Registration sensor (RS)..... Controls the secondary paper feed start timing.
27. Original size sensor (OSS) ..... Detects the size of the original.
28. Original detection switch (ODSW) ..... Detects the opening/closing of the document processor.
29. Home position sensor (HPS) ..... Detects the optical system in the home position.
30. Screw sensor K (SRS-K) ..... Controls the toner replenishing for the toner container K.
31. Screw sensor M (SRS-M) ..... Controls the toner replenishing for the toner container M.
32. Screw sensor C (SRS-C)..... Controls the toner replenishing for the toner container C.
33. Screw sensor Y (SRS-Y) ..... Controls the toner replenishing for the toner container Y.
34. Toner sensor K (TS-K) ..... Detects the toner density in the developer unit K.
35. Toner sensor M (TS-M)..... Detects the toner density in the developer unit M.
36. Toner sensor C (TS-C)..... Detects the toner density in the developer unit C.
37. Toner sensor Y (TS-Y) ..... Detects the toner density in the developer unit Y.
38. ID sensor 1 (IDS1) ..... Measures image density for color calibration.
39. ID sensor 2 (IDS2) ..... Measures image density for color calibration.
40. Color release sensor (CRS)..... Detects separation of primary transfer rollers M, C, and Y.
41. Transfer belt sensor (TRBLS) ..... Detects positioning of transfer belt rotation.
42. Transfer skew sensor (TRSS)..... Detects skew of transfer belt center position.
43. Transfer edge sensor (TRES)..... Detects edge position of the transfer belt.
44. Transfer release sensor (TRRS)..... Detects separation of secondary transfer roller.
45. Loop sensor (LPS)..... Detects a paper misfeed. Controls the fuser motor by detecting deflection in the paper.
46. Fuser belt sensor (FUBLS) ..... Detects positioning of fuser belt rotation.
47. Fuser release sensor (FURS)..... Detects fuser pressure release setting (envelope mode).
48. Fuser thermistor 1 (FTH1) ..... Detects the heat roller (fuser belt) temperature.
49. Fuser thermistor 2 (FTH2) ..... Detects the heat roller (fuser belt) temperature.
50. Fuser thermistor 3 (FTH3) ..... Detects the heat roller (fuser belt) temperature.
51. Fuser thermistor 4 (FTH4) ..... Detects the press roller temperature.
52. Fuser eject sensor (FUES) ..... Detects a paper misfeed in the fuser section.

53. Eject full sensor (EFS) ..... Detects a paper misfeed in the eject section. Detects when the inner tray is full.
54. Switchback sensor (SBS) ..... Detects a paper misfeed in the eject and switchback sections.
55. Duplex sensor 1 (DUS1) ..... Detects a paper misfeed in the duplex section.
56. Duplex sensor 2 (DUS2) ..... Detects a paper misfeed in the duplex section.
57. Duplex cover switch (DUCSW) ..... Detects the opening and closing of the duplex cover.
58. Waste toner sensor 1 (WTS1)..... Detects when the waste toner box is full.
59. Waste toner sensor 2 (WTS2)..... Detects when the waste toner box is near full.
60. Paper conveying unit switch (PCUSW) ..... Detects the opening and closing of the paper conveying unit.
61. Paper conveying cover switch (PCCSW) ..... Detects the opening and closing of the paper conveying cover.
62. Outer temperature sensor (OTEMS)..... Detects the outside temperature and humidity.

(3) Motors

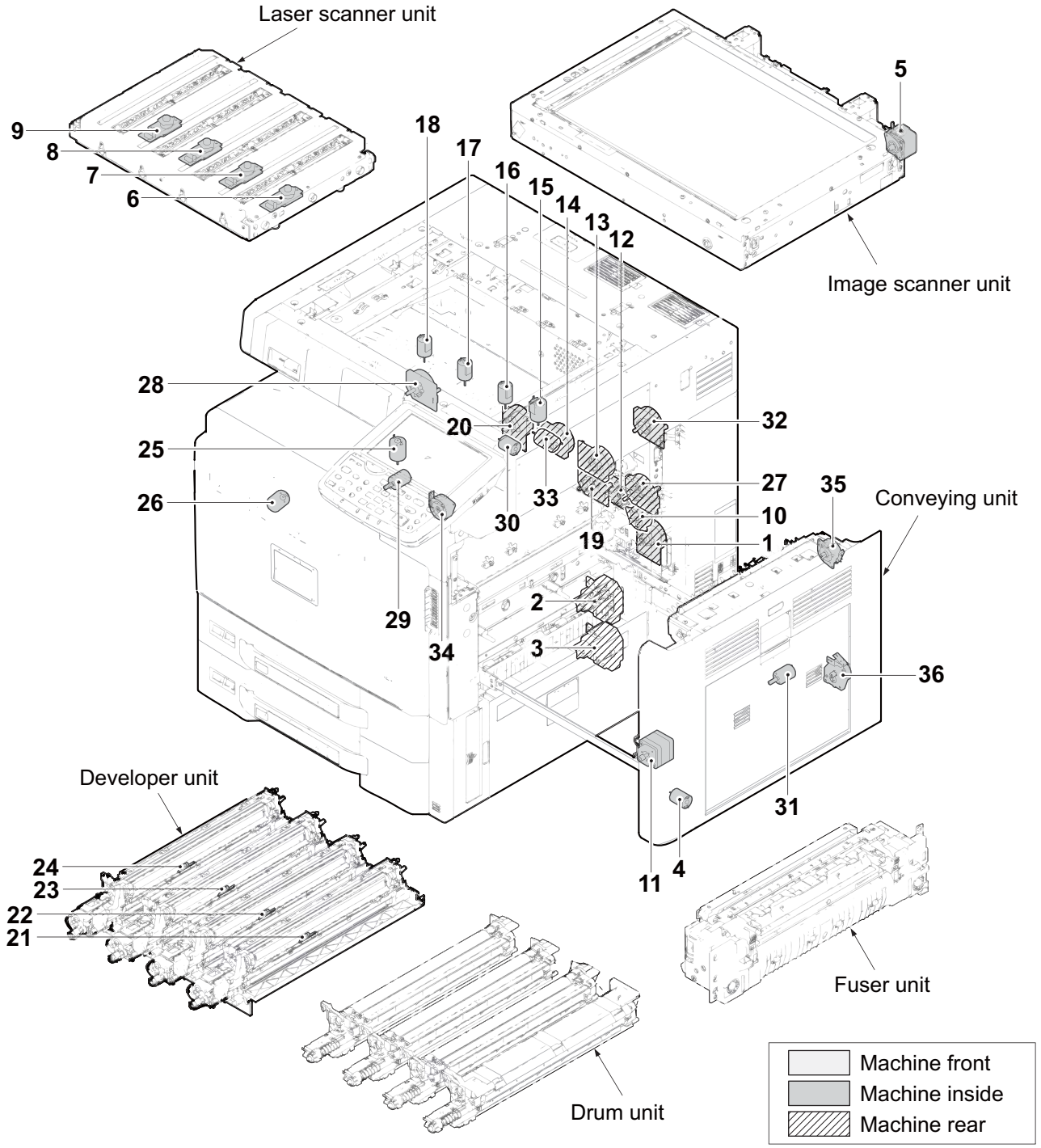

Figure 2-2-3 Motors

1. Paper feed motor (PFM) ..... Drives the paper feed section.
2. Lift motor 1 (LM1)..... Operates the bottom plate (cassette 1).
3. Lift motor 2 (LM2)..... Operates the bottom plate (cassette 2).
4. MP lift motor (MPLM) ..... Operates the MP plate.
5. Scanner motor (SM)..... Drives the optical system.
6. Polygon motor K (PM-K) ..... Drives the polygon mirror K.
7. Polygon motor M (PM-M)..... Drives the polygon mirror M.
8. Polygon motor C (PM-C)..... Drives the polygon mirror C.
9. Polygon motor Y (PM-Y) ..... Drives the polygon mirror Y.
10. Registration motor (RM)*2..... Drives the registration section.
11. Middle motor (MM)*2..... Drives the paper conveying section.
12. Drum motor K (DRM-K) ..... Drives the drum unit K.
13. Drum motor M (DRM-M)*2 ..... Drives the drum unit M.
    Drum motor MCY (DRM-MCY)*1 ..... Drives the drum units M, C and Y.
14. Drum motor C (DRM-C)*2 ..... Drives the drum unit Cand Y.
15. Toner motor K (TM-K) ..... Replenishes toner to the developer unit K.
16. Toner motor M (TM-M) ..... Replenishes toner to the developer unit M.
17. Toner motor C (TM-C)..... Replenishes toner to the developer unit C.
18. Toner motor Y (TM-Y) ..... Replenishes toner to the developer unit Y.
19. Developer motor K (DEVM-K)..... Drives the developer unit K.
20. Developer motor MCY (DEVM-MCY) ... Drives the developer units M, C and Y.
21. Vibration motor K (VM-K)..... Toner lump in the developer unit K vibrates.
22. Vibration motor M (VM-M)..... Toner lump in the developer unit M vibrates.
23. Vibration motor C (VM-C) ..... Toner lump in the developer unit C vibrates.
24. Vibration motor Y (VM-Y)..... Toner lump in the developer unit Y vibrates.
25. LSU cleaning motor (LSUCM) ..... Drives LSU dust shield glass cleaning system.
26. Waste toner motor (WTM)..... Drives waste toner system.
27. Transfer motor (TRM) ..... Drives the transfer section.
28. Transfer cleaning motor (TRCM) ..... Drives the transfer cleaning section.
29. Color release motor (CRM)..... Drives separation of primary transfer rollers M, C, and Y.
30. Transfer skew motor (TRSM)..... Drives skew of transfer tension roller.
31. Transfer release motor (TRRM)..... Drives separation of secondary transfer roller.
32. Fuser motor (FUM) ..... Drives the fuser section.
33. Fuser release motor (FURM)..... Drives fuser pressure release.
34. Eject motor (EM)..... Drives the eject section.
35. Duplex motor 1 (DUM1)*2..... Drives the duplex section.
36. Duplex motor 2 (DUM2)*2..... Drives the duplex section.

*1: 30 ppm/35 ppm model only.
*2: 45 ppm/55 ppm model only.

(4) Fan motors

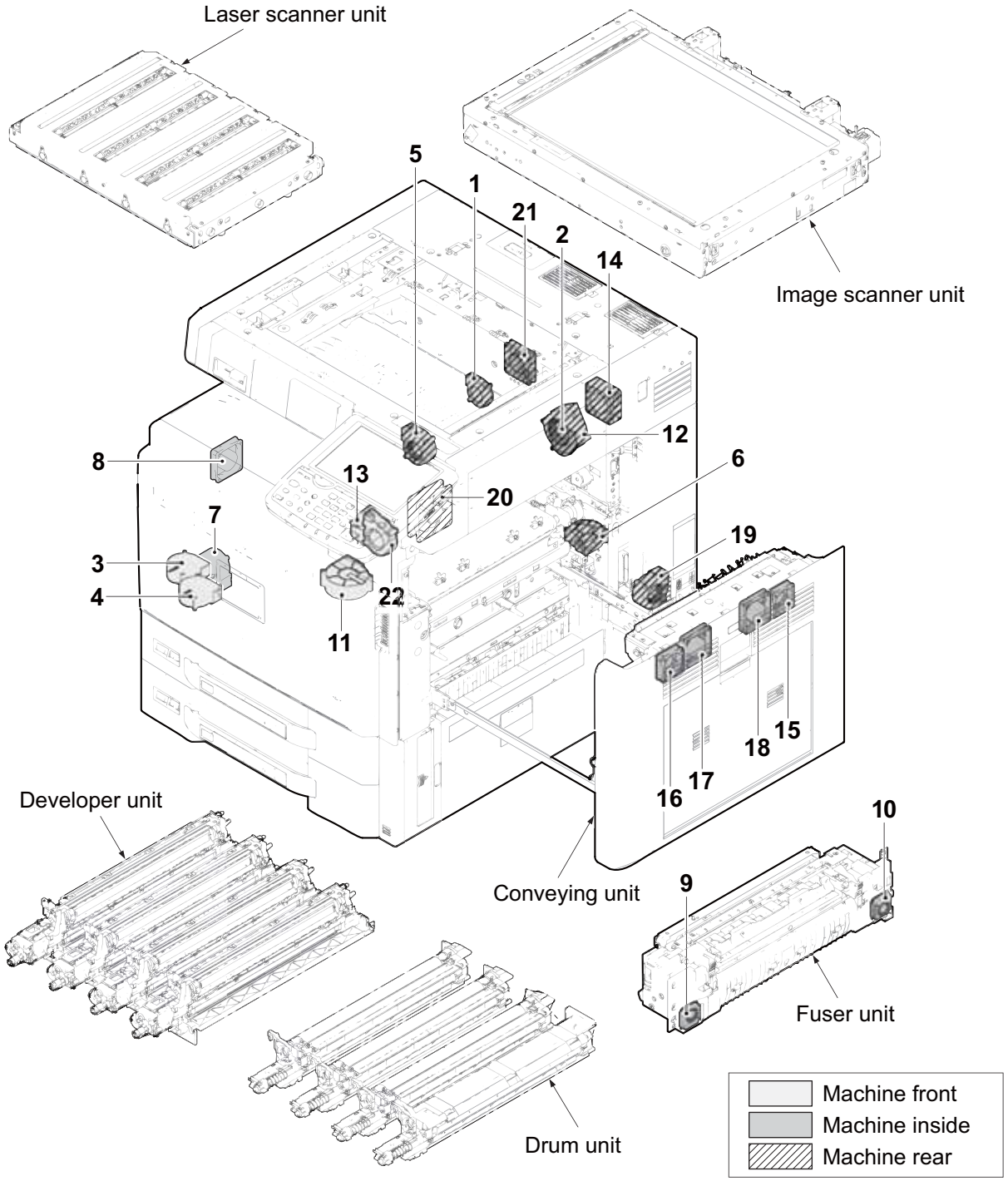

Figure 2-2-4 Motors

1. Toner fan motor 1 (TFM1)*..... Cools the toner container section.
2. Toner fan motor 2 (TFM2)*..... Cools the toner container section.
3. Developer fan motor 1 (DEVFM1) ..... Cools the developer section.
4. Developer fan motor 2 (DEVFM2) ..... Cools the developer section.
5. Exhaust fan motor 1 (EXFM1)*..... Cools the machine inside.
6. Exhaust fan motor 2 (EXFM2)*..... Cools the machine inside.
7. LSU fan motor (LSUFM) ..... Cools the laser scanner unit section.
8. Belt fan motor 1 (BLFM1)..... Cools the transfer belt section.
9. Fuser edge fan motor 1 (FUEFM1)..... Cools the fuser section (edge).
10. Fuser edge fan motor 2 (FUEFM2)..... Cools the fuser section (edge).
11. Fuser front fan motor (FUFFM)..... Cools the fuser section (front side).
12. Fuser rear fan motor (FURFM) ..... Cools the fuser section (rear side).
13. Eject front fan motor (EFFM) ..... Cools the eject section (front side).
14. Eject rear fan motor (ERFM)..... Cools the eject section (rear side).
15. Fuser fan motor 1 (FUFM1) ..... Cools the fuser section.
16. Fuser fan motor 2 (FUFM2) ..... Cools the fuser section.
17. Eject fan motor 1 (EFM1)* ..... Cools the eject section.
18. Eject fan motor 2 (EFM2)* ..... Cools the eject section.
19. IH fan motor (IHFM)..... Cools the fuser IH PWB.
20. Power source fan motor (PSFM) ..... Cools the power source section.
21. Controller fan motor (CONFM)..... Cools the controller section.
22. Eject diffusion fan motor (EDFM)..... Cools the eject section.

*: 45 ppm/55 ppm model only.

(5) Others

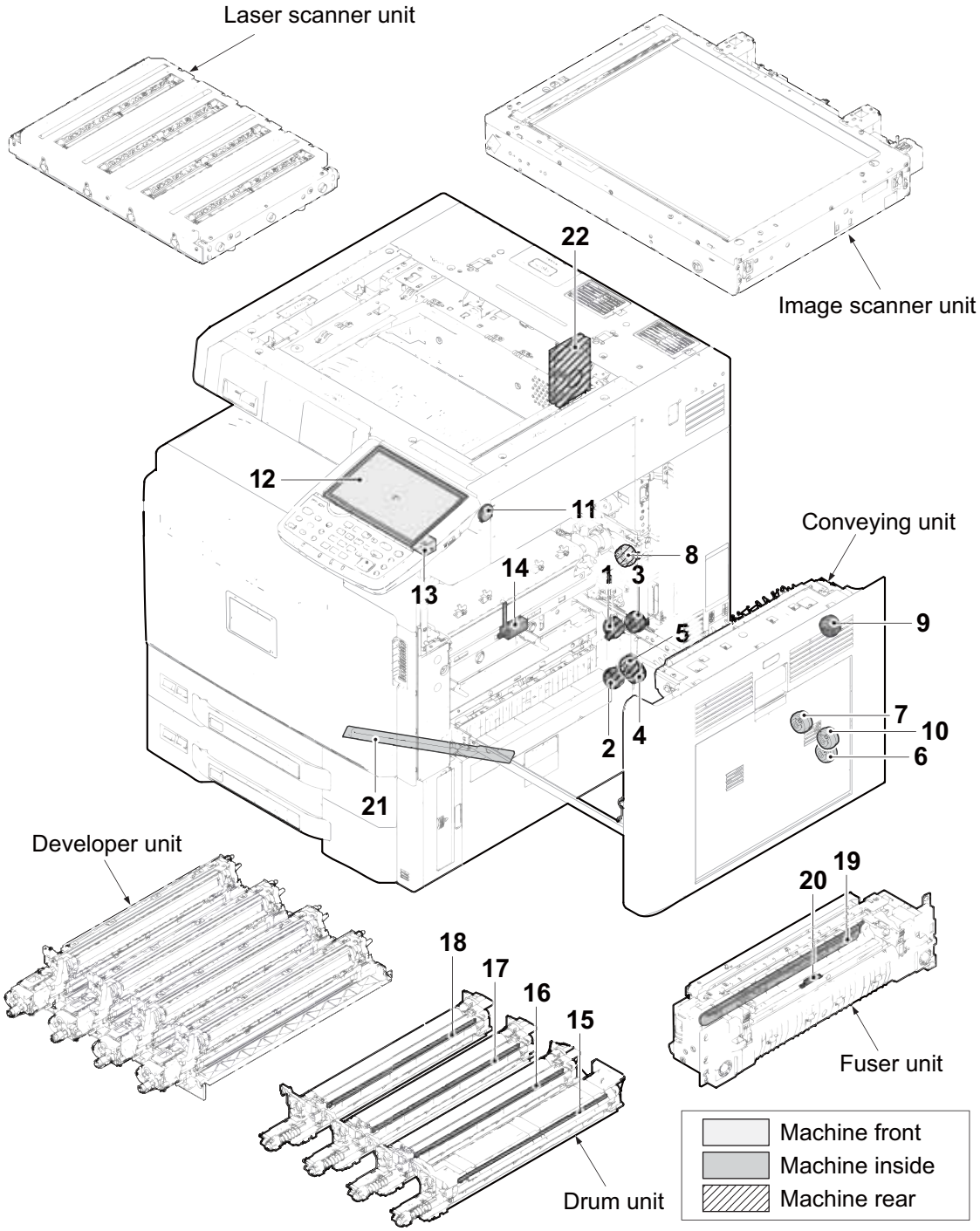

Figure 2-2-5 Others

1. Paper feed clutch 1 (PFCL1) ..... Primary paper feed from cassette 1.
2. Paper feed clutch 2 (PFCL2) ..... Primary paper feed from cassette 2.
3. Assist clutch 1 (ASCL1)*2 ..... Controls the drive of the assist roller.
4. Assist clutch 2 (ASCL2)*2 ..... Controls the drive of the assist roller.
5. Paper conveying clutch (PCCL)..... Controls the drive of vertical conveying section.
6. MP paper feed clutch (MPPFCL) ..... Controls primary paper feed from the MP tray.
7. Middle clutch (MCL)*1 ..... Controls the drive of paper conveying section.
8. Registration clutch (RCL)*1..... Controls the secondary paper feed.
9. Duplex clutch 1 (DUCL1)*1 ..... Controls the drive of duplex section.

10. Duplex clutch 2 (DUCL2)*1 ..... Controls the drive of duplex section.
11. Speaker (SPK) ..... Generates an error sound.
12. Touch panel (TPL)..... Operates the operation panel.
13. Feedshift solenoid (FSSOL)..... Controls the feedshift guide.
14. Cleaning solenoid (CLSOL) ..... Controls the ID sensor cleaning.
15. Cleaning lamp K (CL-K) ..... Eliminates the residual electrostatic charge on the drum (black).
16. Cleaning lamp M (CL-M)..... Eliminates the residual electrostatic charge on the drum (magenta).
17. Cleaning lamp C (CL-C)..... Eliminates the residual electrostatic charge on the drum (cyan).
18. Cleaning lamp Y (CL-Y) ..... Eliminates the residual electrostatic charge on the drum (yellow).
19. Fuser IH (FIH) ..... Heats the heat roller (fuser belt).
20. Fuser thermostat (FTS)..... Prevents overheating of the heat roller (fuser belt).
21. Cassette heater (CH) ..... Dehumidifies the cassette section (option).
22. Hard disk (HDD)..... Storages the image data and information of job accounting mode.

*1: 30 ppm/35 ppm model only.
*2: 45 ppm/55 ppm model only.

2-3-1 Main PWB

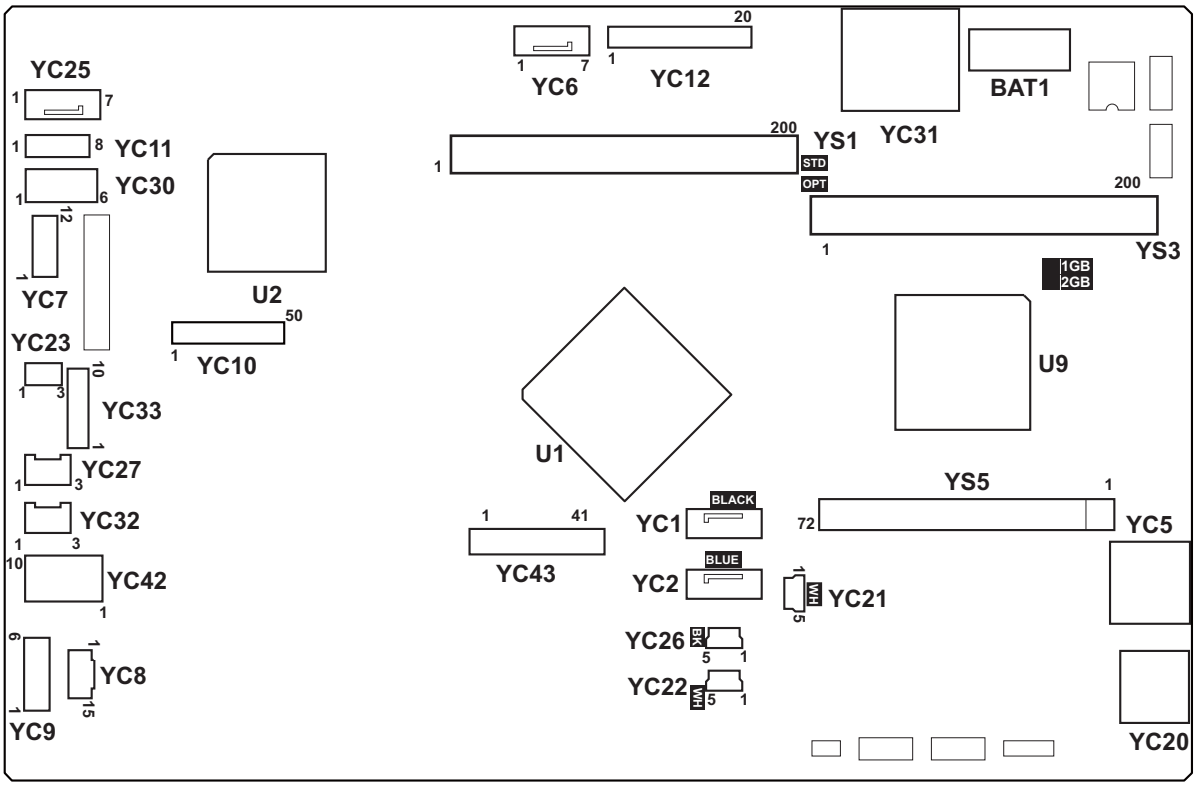

Figure 2-3-1 Main PWB silk-screen diagram

Connector	Pin	Signal	I/O	Voltage	Description
YC1	1	GND	-	-	Ground
Connected to hard disk 1	2	TXP	O	-	HDD1 data signal
	3	TXN	O	-	HDD1 data signal
	4	GND	-	-	Ground
	5	RXN	I	-	HDD1 data signal
	6	RXP	I	-	HDD1 data signal
	7	GND	-	-	Ground
YC2	1	GND	-	-	Ground
Connected to hard disk 2 *1 (*1:45ppm/ 55ppm model only)	2	TXP	O	-	HDD2 data signal
	3	TXN	O	-	HDD2 data signal
	4	GND	-	-	Ground
	5	RXN	I	-	HDD2 data signal
	6	RXP	I	-	HDD2 data signal
	7	GND	-	-	Ground
YC5	1	TD1+	O	0/3.3 V DC (pulse)	Transmission data
Connected to ethernet	2	TD1-	O	0/3.3 V DC (pulse)	Transmission data
	3	TD2+	O	0/3.3 V DC (pulse)	Transmission data
	4	TD2-	O	0/3.3 V DC (pulse)	Transmission data
	5	CT1	O	3.3 V DC	3.3 V DC power output
	6	CT2	O	3.3 V DC	3.3 V DC power output
	7	TD3+	O	0/3.3 V DC (pulse)	Transmission data
	8	TD3-	O	0/3.3 V DC (pulse)	Transmission data
	9	TD4+	O	0/3.3 V DC (pulse)	Transmission data
	10	TD4-	O	0/3.3 V DC (pulse)	Transmission data
	11	GRLED_A1	O	0/3.3 V DC	LED emitter signal
	12	GRLED_K1	O	0/3.3 V DC	LED emitter signal
	13	YWLED_A2	O	0/3.3 V DC	LED emitter signal
	14	YWLED_K2	O	0/3.3 V DC	LED emitter signal
YC6	1	GND	-	-	-
Connected to operation panel PWB1	2	LCD_OFF	O	0/3.3 V DC	Control signal
	3	LOCKN	O	0/3.3 V DC	Lock signal
	4	GND	-	-	-
	5	TX0N	O	0/3.3 V DC (pulse)	Transmission data signal
	6	TX0P	O	0/3.3 V DC (pulse)	Transmission data signal
	7	GND	-	-	-

Connector	Pin	Signal	I/O	Voltage	Description
YC7	1	KMDET	I	0/3.3 V DC	KMAS set signal
Connected to KMAS	2	NC	-	-	Not used
	3	KMDREQ	I	0/3.3 V DC	KMAS control signal
	4	KMACK	O	0/3.3 V DC	KMAS control signal
	5	KMRXD	O	0/3.3 V DC (pulse)	KMAS received data signal
	6	SGND	-	-	Ground
	7	KMTXD	I	0/3.3 V DC (pulse)	KMAS transmission data signal
	8	SGND	-	-	Ground
	9	SGND	-	-	Ground
	10	SGND	-	-	Ground
	11	+5V	O	5 V DC	5 V DC power to KMAS
	12	+5V	O	5 V DC	5 V DC power to KMAS
YC8	1	VBUS1	O	3.3 V DC	3.3 V DC power to IFPWB
Connected to interface PWB	2	USB_DN1	I/O	-	USB data signal
	3	USB_DP1	I/O	-	USB data signal
	4	GND	-	-	Ground
	5	AUDIO1	I	Analog	Audio signal
	6	WAKEUP1	O	0/3.3 V DC	Control signal
	7	RESET1	I	0/3.3 V DC	Reset signal
	8	GND	-	-	Ground
	9	VBUS0	O	3.3 V DC	3.3 V DC power to IFPWB
	10	USB_DN0	I/O	-	USB data signal
	11	USB_DP0	I/O	-	USB data signal
	12	GND	-	-	Ground
	13	AUDIO0	I	Analog	Audio signal
	14	WAKEUP0	O	0/3.3 V DC	Control signal
	15	VBUS1	O	3.3 V DC	3.3 V DC power to IFPWB
YC9	1	GND	-	-	Ground
Connected to interface PWB	2	5V_CUT0	I	0/3.3 V DC	5 V DC cut signal
	3	GND	-	-	Ground
	4	5V	O	5 V DC	5 V DC power to IFPWB
	5	GND	-	-	Ground
	6	5V_CUT1	I	0/3.3 V DC	5 V DC cut signal

Connector	Pin	Signal	I/O	Voltage	Description
YC10	1	DP_CONECTN	I	0/3.3 V DC	DPRPWB Control signal
Connected to DP relay PWB	2	DP_SYSCLKOUT	O	0/3.3 V DC (pulse)	DPRPWB clock signal
	3	PCIEN3_DP2A	I	0/3.3 V DC (pulse)	Image data signal
	4	GND	-	-	Ground
	5	PCIEP3_DP2A	I	0/3.3 V DC (pulse)	Image data signal
	6	GND	-	-	Ground
	7	GND	-	-	Ground
	8	PCIEN_REFCLK	O	0/3.3 V DC (pulse)	DPRPWB clock signal
	9	GND	-	-	Ground
	10	PCIEP_REFCLK_D	O	0/3.3 V DC (pulse)	DPRPWB clock signal
	11	PCIEN3_A2DP	O	0/3.3 V DC (pulse)	Image data signal
	12	GND	-	-	Ground
	13	PCIEP3_A2DP	O	0/3.3 V DC (pulse)	Image data signal
	14	GND	-	-	Ground
	15	GND	-	-	Ground
	16	URAN_RSTN	O	0/3.3 V DC	DPRPWB Control signal
	17	PCIEN2_DPA2	I	0/3.3 V DC (pulse)	Image data signal
	18	+3.3V3	-	3.3 V DC	3.3 V DC power to DPRPWB
	19	PCIEP2_DP2A	I	0/3.3 V DC (pulse)	Image data signal
	20	+3.3V3	-	3.3 V DC	3.3 V DC power to DPRPWB
	21	GND	-	-	Ground
	22	+3.3V3	-	3.3 V DC	3.3 V DC power to DPRPWB
	23	PCIEN2_A2DP	O	0/3.3 V DC (pulse)	Image data signal
	24	+3.3V3	-	3.3 V DC	3.3 V DC power to DPRPWB
	25	PCIEP2_A2DP	O	0/3.3 V DC (pulse)	Image data signal
	26	+3.3V3	-	3.3 V DC	3.3 V DC power to DPRPWB
	27	GND	-	-	Ground
	28	+3.3V3	-	3.3 V DC	3.3 V DC power to DPRPWB
	29	PCIEN1_DPA2	I	0/3.3 V DC (pulse)	Image data signal
	30	+3.3V3	-	3.3 V DC	3.3 V DC power to DPRPWB
	31	PCIEP1_DPA2	I	0/3.3 V DC (pulse)	Image data signal
	32	+3.3V3	-	3.3 V DC	3.3 V DC power to DPRPWB
	33	GND	-	-	Ground
	34	+3.3V3	-	3.3 V DC	3.3 V DC power to DPRPWB
	35	PCIEN1_A2DP	O	0/3.3 V DC (pulse)	Image data signal
	36	GND	-	-	Ground
	37	PCIEP1_A2DP	O	0/3.3 V DC (pulse)	Image data signal

Connector	Pin	Signal	I/O	Voltage	Description
YC10	38	GND	-	-	Ground
Connected to DP relay PWB	39	GND	-	-	Ground
	40	GND	-	-	Ground
	41	PCIEN0_DPA2	I	0/3.3 V DC (pulse)	Image data signal
	42	GND	-	-	Ground
	43	PCIEN0_DPA2	I	0/3.3 V DC (pulse)	Image data signal
	44	GND	-	-	Ground
	45	GND	-	-	Ground
	46	PCIEN0_A2DP	O	0/3.3 V DC (pulse)	Image data signal
	47	GND	-	-	Ground
	48	PCIEP0_A2DP	O	0/3.3 V DC (pulse)	Image data signal
	49	PCIE3_SWRST_A2	O	0/3.3 V DC (pulse)	DPRPWB clock signal
	50	GND	-	-	Ground
YC11	1	GND	-	-	Ground
Connected to ISC PWB	2	SC_IRN	O	0/3.3 V DC	Scanner interrupt signal
	3	SC_DIR	O	0/3.3 V DC	Scanner communication direction signal
	4	SC_HLDN	O	0/3.3 V DC	Scanner hold signal
	5	SC_BSY	O	0/3.3 V DC	Scanner busy signal
	6	SC_SI	O	0/3.3 V DC (pulse)	Serial communication data signal
	7	SC_SO	I	0/3.3 V DC (pulse)	Serial communication data signal
	8	SC_CLK	O	0/3.3 V DC (pulse)	Scanner clock signal
YC12	1	HUMAN_SENS_FAR	-	-	Not used
Connected to operation PWB 1	2	JOB_LED	O	0/3.3 V DC	JOB LED control signal
	3	5V0	O	5 V DC	5 V D C power to OPWB1
	4	HUMAN_SENS_NEAR	-	-	Not used
	5	ANY_KEY	I	0/3.3 V DC	ANY KEY return signal
	6	C2P_SCK	O	0/3.3 V DC (pulse)	Panel clock signal
	7	P2C_SBSY	I	0/3.3 V DC	Panel busy signal
	8	P2C_SDIR	I	0/3.3 V DC	Panel communication direction signal
	9	C2P_SDAT	O	0/3.3 V DC (pulse)	Serial communication data signal
	10	P2C_SDAT	I	0/3.3 V DC (pulse)	Serial communication data signal
	11	GND	-	-	Ground
	12	PANEL RESET	O	0/3.3 V DC	Reset signal

Connector	Pin	Signal	I/O	Voltage	Description
YC12	13	BEEP_POWERON	O	0/3.3 V DC	Sleep return signal
Connected to operation PWB 1	14	LED_MEMORY_N	O	0/3.3 V DC	Memory LED control signal
	15	LED_ATTENTION_N	O	0/3.3 V DC	Attention LED control signal
	16	LED_PROCESSING_N	O	0/3.3 V DC	Processing LED control signal
	17	AUDIO	O	Analog	Audio output signal
	18	INT_POWERKEY_N	I	0/3.3 V DC	Power key: On/Off
	19	GND	-	-	Ground
	20	LIGHTOFF_POWERON	O	0/3.3 V DC	Sleep return signal
YC20	A1	VBUS_A	O	5 V DC	5 V DC power output
Connected to USB	A2	D-_A	I/O	-	USB data signal
	A3	D+_A	I/O	-	USB data signal
	A4	GND_A	-	-	Ground
	B1	VBUS_B	O	5 V DC	5 V DC power output
	B2	D-_B	I/O	-	USB data signal
	B3	D+_B	I/O	-	USB data signal
	B4	GND_B	-	-	Ground
YC21	1	VBUS	O	5 V DC	5 V DC power output
Connected to USB host	2	DATA -	I/O	-	USB data signal
	3	DATA +	I/O	-	USB data signal
	4	ID	-	-	Not used
	5	GND	-	-	Ground
YC22	1	VBUS	O	5 V DC	5 V DC power output
Connected to key board	2	DATA-	I/O	-	USB data signal
	3	DATA+	I/O	-	USB data signal
	4	ID	-	-	Not used
	5	GND	-	-	Ground
YC23	1	SPEED_CONTROL	O	12 V DC	CONFM: On/Off
Connected to controller fan motor	2	GND	-	-	Ground
	3	5V	O	5 V D C	5 V DC power output

Connector	Pin	Signal	I/O	Voltage	Description
YC25	1	GND	-	-	Ground
Connected to ISC PWB	2	HTPDN	I	0/3.3 V DC	Control signal
	3	LOCKN	I	0/3.3 V DC	Lock signal
	4	GND	-	-	Ground
	5	RX0N	I	0/3.3 V DC (pulse)	Received data signal
	6	RX0P	I	0/3.3 V DC (pulse)	Received data signal
	7	GND	-	-	Ground
YC26	1	VBUS	O	5 V DC	5 V DC power output
Connected to card reader	2	DATA-	I/O	-	USB data signal
	3	DATA+	I/O	-	USB data signal
	4	ID	-	-	Not used
	5	GND	-	-	Ground
YC27	1	GND	-	-	Ground
Connected to hard disk 1	2	+5V_HDD	O	5 V DC	5 V DC power to HDD1
	3	GND	-	-	Ground
YC30	1	+5V6	O	5 V DC	5 V DC power from OPWB1
Connected to operation PWB 1	2	+5V6	O	5 V DC	5 V DC power from OPWB1
	3	+5V6	O	5 V DC	5 V DC power from OPWB1
	4	GND	-	-	Ground
	5	GND	-	-	Ground
	6	GND	-	-	Ground
YC31	1	CD/DAT3	I/O	0/3.3 V DC	Control signal
Connected to SD card	2	CMD	I/O	0/3.3 V DC	Control signal
	3	VSS	-	-	Ground
	4	VDD	-	0/3.3 V DC	Control signal
	5	CLK	-	0/3.3 V DC	Control signal
	6	VSS	-	-	Ground
	7	DAT0	I/O	0/3.3 V DC (pulse)	Data bus signal
	8	DAT1	I/O	0/3.3 V DC (pulse)	Data bus signal
	9	DAT2	I/O	0/3.3 V DC (pulse)	Data bus signal
	10	CD	I	0/3.3 V DC	Control signal
	11	COMMON	-	0/3.3 V DC	Control signal
	12	WP	I	0/3.3 V DC	Control signal

Connector	Pin	Signal	I/O	Voltage	Description
YC32	1	GND	-	-	Ground
Connected to hard disk 2 *1 (*1:45 ppm/ 55 ppm model only)	2	+5V_HDD	O	5 V DC	5 V DC power to HDD2
	3	GND	-	-	Ground
YC33	1	SGND	-	-	Ground
Connected to fiery relay PWB	2	SDOCLK	O	0/3.3 V DC (pulse)	Clock signal
	3	SDO	O	0/3.3 V DC (pulse)	Serial communication data signal
	4	SGND	-	-	Ground
	5	SDICLK	O	0/3.3 V DC (pulse)	Clock signal
	6	SDI	I	0/3.3 V DC (pulse)	Serial communication data signal
	7	SGND	-	-	Ground
	8	SGND	-	-	Ground
	9	5V	O	5 V DC	5 V DC power to FIRPWB
	10	5V	O	5 V DC	5 V DC power to FIRPWB
YC42	1	5V1	I	5 V DC	5 V D C power from PSPWB
Connected to power source PWB	2	GND	-	-	Ground
	3	5V1	I	5 V DC	5 V D C power from PSPWB
	4	GND	-	-	Ground
	5	5V1	I	5 V DC	5 V D C power from PSPWB
	6	GND	-	-	Ground
	7	5V1	I	5 V DC	5 V D C power from PSPWB
	8	GND	-	-	Ground
	9	5V1	I	5 V DC	5 V D C power from PSPWB
	10	GND	-	-	Ground
YC43	1	SLEEP_INT	O	0/3.3 V DC	Sleep signal
Connected to engine PWB	2	EGSCLK	O	0/3.3 V DC (pulse)	Engine clock signal
	3	EGSI	O	0/3.3 V DC (pulse)	Serial communication data signal
	4	EGSDIR	O	0/3.3 V DC	Engine communication direction signal
	5	EGSBSY	O	0/3.3 V DC	Enngine busy signal
	6	EGSO	I	0/3.3 V DC (pulse)	Serial communication data signal
	7	EGIRN	O	0/3.3 V DC	Engine interrupt signal
	8	JS_LED	O	0/3.3 V DC	LED control signal
	9	ENG_OFF	O	0/3.3 V DC	Engine off signal
	10	HLDENG	O	0/3.3 V DC	Engine hold signal
	11	SLEEP	O	0/3.3 V DC	Sleep signal

Connector	Pin	Signal	I/O	Voltage	Description
YC43	12	HSYNDD_P	O	0/3.3 V DC (pulse)	Image control signal
Connect to engine PWB	13	HSYNDD_N	O	0/3.3 V DC (pulse)	Image control signal
	14	HSYNCC_P	O	0/3.3 V DC (pulse)	Image control signal
	15	HSYNCC_N	O	0/3.3 V DC (pulse)	Image control signal
	16	HSYNCB_P	O	0/3.3 V DC (pulse)	Image control signal
	17	HSYNCB_N	O	0/3.3 V DC (pulse)	Image control signal
	18	HSYNCA_P	O	0/3.3 V DC (pulse)	Image control signal
	19	HSYNCA_N	O	0/3.3 V DC (pulse)	Image control signal
	20	VSYNDD_P	O	0/3.3 V DC (pulse)	Image control signal
	21	VSYNDD_N	O	0/3.3 V DC (pulse)	Image control signal
	22	VSYNCC_P	O	0/3.3 V DC (pulse)	Image control signal
	23	VSYNCC_N	O	0/3.3 V DC (pulse)	Image control signal
	24	VSYNCB_P	O	0/3.3 V DC (pulse)	Image control signal
	25	VSYNCB_N	O	0/3.3 V DC (pulse)	Image control signal
	26	VSYNCA_P	O	0/3.3 V DC (pulse)	Image control signal
	27	VSYNCA_N	O	0/3.3 V DC (pulse)	Image control signal
	28	GND	-	-	Ground
	29	TCLKP	O	0/3.3 V DC (pulse)	Clock signal
	30	TCLKN	O	0/3.3 V DC (pulse)	Clock signal
	31	GND	-	-	Ground
	32	TCP	O	0/3.3 V DC (pulse)	Image control signal
	33	TCN	O	0/3.3 V DC (pulse)	Image control signal
	34	GND	-	-	Ground
	35	TBP	O	0/3.3 V DC (pulse)	Image control signal
	36	TBN	O	0/3.3 V DC (pulse)	Image control signal
	37	GND	-	-	Ground
	38	TAP	O	0/3.3 V DC (pulse)	Image control signal
	39	TAN	O	0/3.3 V DC (pulse)	Image control signal
	40	GND	-	-	Ground
	41	SGND	-	-	Ground
	42	SGND	-	-	Ground
	43	SGND	-	-	Ground
	44	SGND	-	-	Ground
	45	SGND	-	-	Ground
	46	SGND	-	-	Ground
	47	SGND	-	-	Ground
	48	SGND	-	-	Ground

2-3-2 Engine PWB

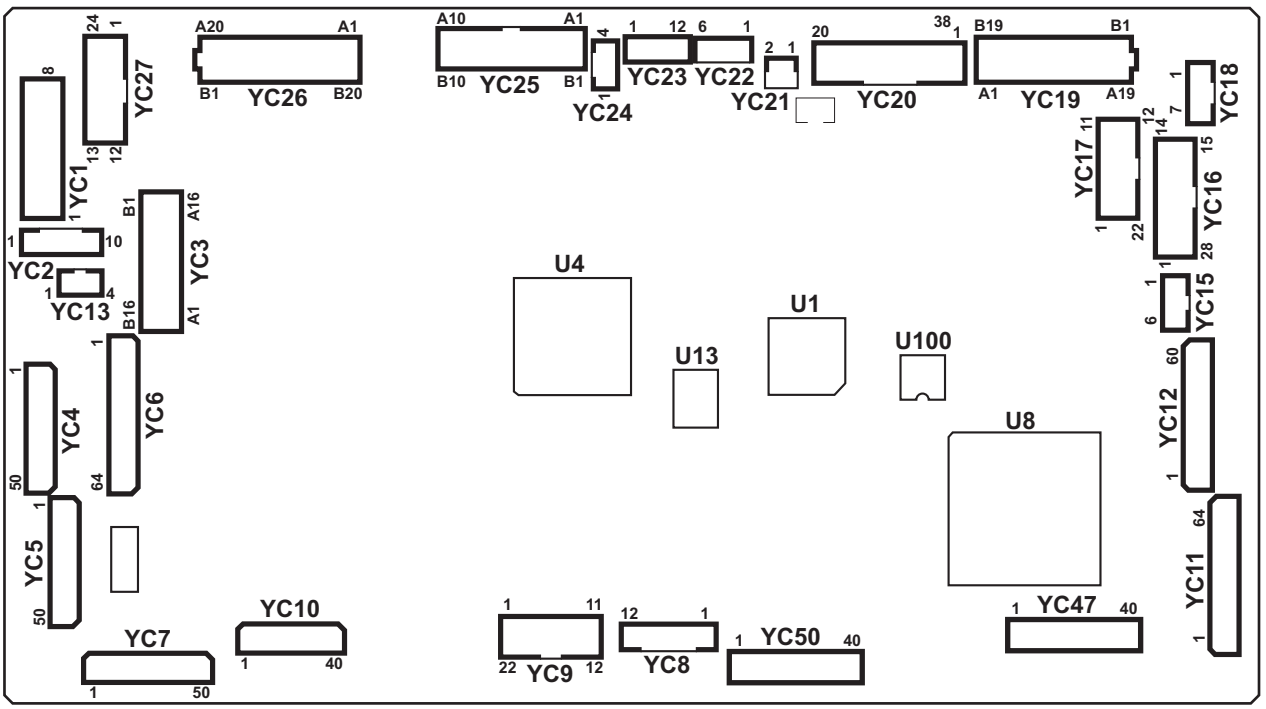

Figure 2-3-2 Engine PWB silk-screen diagram

Connector	Pin	Signal	I/O	Voltage	Description
YC1	1	GND	-	-	Ground
Connected to feed PWB 1	2	5V	I	5 V DC	5 V DC power from FPWB1
	3	GND	-	-	Ground
	4	5V	I	5 V DC	5 V DC power from FPWB1
	5	GND	-	-	Ground
	6	GND	-	-	Ground
	7	24V1	I	24 V DC	24 V DC power from FPWB1
	8	24V1	I	24 V DC	24 V DC power from FPWB1
YC2	1	GND	-	-	Ground
Connected to front PWB	2	GND	-	-	Ground
	3	GND	-	-	Ground
	4	GND	-	-	Ground
	5	GND	-	-	Ground
	6	+24V1	O	24 V DC	24 V DC power to FRPWB
	7	+24V1	O	24 V DC	24 V DC power to FRPWB
	8	+5V	O	5 V DC	5 V DC power to FRPWB
	9	+3.3V2	O	3.3 V DC	3.3 V DC power to FRPWB
	10	+3.3V1	O	3.3 V DC	3.3 V DC power to FRPWB
YC3	A1	24V1	O	24 V DC	24 V DC power to TRCM
Connected to transfer belt unit	A2	GND	-	-	Ground
	A3	ICL_MOT_REM	I	0/3.3 V DC	TRCM: On/Off
	A4	ICL_MOT_CLK	O	0/3.3 V DC (pulse)	TRCM clock signal
	A5	ICL_MOT_RDY	I	0/3.3 V DC	TRCM ready signal
	A6	ICL_MOT_DIR	O	0/3.3 V DC	TRCM drive switch signal
	A7	RLS_MOT_DR	O	0/24 V DC	CRM: On/Off
	A8	24V1	O	24 V DC	24 V DC power to CRM
	A9	GND	-	-	Ground
	A10	RLS_SENS	I	0/3.3 V DC	CRS: On/Off
	A11	5V	O	5 V DC	5 V DC power to CRS
	A12	ZIG_MOT_DR_CCW	O	0/24 V DC	TRSM: On/Off (CCW)
	A13	ZIG_MOT_DR_CW	O	0/24 V DC	TRSM: On/Off (CW)
	A14	GND	-	-	Ground
	A15	BLT_INDEX	-	-	Not used
	A16	5V	-	-	Ground
	B1	GND	-	-	Ground

Connector	Pin	Signal	I/O	Voltage	Description
YC3	B2	ZIG_SENS	I	0/3.3 V DC	TRSS: On/Off
Connected to transfer belt unit	B3	5V	O	5 V DC	5 V DC power to TRSS
	B4	GND	-	-	Ground
	B5	BLT_SPEED	I	0/3.3 V DC	TRBLS: On/Off
	B6	5V	O	5 V DC	5 V DC power to TRBLS
	B7	TEMP	I	Analog	TEMP signal
	B8	ZIG_REV_SENS	I	0/3.3 V DC	TRES: On/Off
	B9	GND	-	-	Ground
	B10	5V	O	5 V DC	5 V DC power to TRES
	B11	3.3V2	O	3.3 V DC	3.3 V DC power to TRPWB
	B12	EEP_SCL2	O	0/3.3 V DC (pulse)	EEPROM clock signal
	B13	EEP_SDA2	I/O	0/3.3 V DC (pulse)	EEPROM data signal
	B14	GND	-	-	Ground
	B15	A0	-	-	Not used
	B16	A1	-	-	Not used
YC4	1	GND	-	-	Ground
Connected to feed PWB 2	2	FEED_MOT_REM	O	0/3.3 V DC	PFM: On/Off
	3	FEED_MOT_CLK	O	0/3.3 V DC (pulse)	PFM clock signal
	4	FEED_MOT_RDY	I	0/3.3 V DC	PFM ready signal
	5	FEED_MOT_DIR	O	0/3.3 V DC	PFM drive switch signal
	6	FEED_CL1_REM	O	0/24 V DC	PFCL1: On/Off
	7	FEED_CL2_REM	O	0/24 V DC	PFCL2: On/Off
	8	ASIST_CL2	O	0/24 V DC	ASCL2: On/Off
	9	LIFT_MOT2_REM	O	0/24 V DC	LM2: On/Off
	10	GND	-	-	Ground
	11	LIFT_MOT1_REM 1	O	0/24 V DC	LM1: On/Off
	12	CAS2_WID	I	0/3.3 V DC	PWSW2: On/Off
	13	CAS2_LNG3	I	0/3.3 V DC	PLSW2: On/Off
	14	CAS2_LNG2	I	0/3.3 V DC	PLSW2: On/Off
	15	CAS2_LNG1	I	0/3.3 V DC	PLSW2: On/Off
	16	CAS1_WID	I	0/3.3 V DC	PWSW1: On/Off
	17	CAS1_LNG3	I	0/3.3 V DC	PLSW1: On/Off
	18	CAS1_LNG2	I	0/3.3 V DC	PLSW1: On/Off
	19	CAS1_LNG1	I	0/3.3 V DC	PLSW1: On/Off
	20	GND	-	-	Ground

Connector	Pin	Signal	I/O	Voltage	Description
YC4	21	CAS2_QUANT2	I	0/3.3 V DC	PGS2(L): On/Off
Connected to feed PWB 2	22	CAS2_QUANT1	I	0/3.3 V DC	PGS2(U): On/Off
	23	CAS1_QUANT2	I	0/3.3 V DC	PGS1(L): On/Off
	24	CAS1_QUANT1	I	0/3.3 V DC	PGS1(U): On/Off
	25	LIFT_MOT1_LOCK	I	0/3.3 V DC	LM1 lock signal
	26	LIFT_MOT2_LOCK	I	0/3.3 V DC	LM2 lock signal
	27	CURRENT_SIG	I	0/3.3 V DC	Current signal
	28	V-FEED_CL	O	0/24 V DC	PCCL: On/Off
	29	COVER_OPEN	I	0/3.3 V DC	PCCSW: On/Off
	30	FEED2_SENS	I	0/3.3 V DC	PFPCS1: On/Off
	31	CAS1_P0	I	0/3.3 V DC	FS1: On/Off
	32	CAS1_LIFT_UP	I	0/3.3 V DC	LS1: On/Off
	33	GND	-	-	Ground
	34	CAS1_EMPTY	I	0/3.3 V DC	PS1: On/Off
	35	PICK_SOL1_RET	O	0/24 V DC	PUSOL1: On/Off (RET)
	36	PICK_SOL1_REM	O	0/24 V DC	PUSOL1: On/Off (ACT)
	37	CAS2_P0	I	0/3.3 V DC	FS2: On/Off
	38	CAS2_LIFT_UP	I	0/3.3 V DC	LS2: On/Off
	39	CAS2_EMPTY	I	0/3.3 V DC	PS2: On/Off
	40	PICK_SOL2_RET	O	0/24 V DC	PUSOL2: On/Off (RET)
	41	PICK_SOL2_REM	O	0/24 V DC	PUSOL2: On/Off (ACT)
	42	GND	-	-	Ground
	43	REG_SENS	I	0/3.3 V DC	RS: On/Off
	44	FEED1_SENS	I	0/3.3 V DC	PCS: On/Off
	45	BEND_SENS	I	0/3.3 V DC	RDS: On/Off
	46	MID_MOT_PH	O	0/3.3 V DC	MM control signal
	47	MID_MOT_REM(ROL_CL)	O	0/3.3 V DC	MM/MCL: On/Off
	48	MID_MOT_CLK	O	0/3.3 V DC (pulse)	MM clock signal
	49	MID_MOT_PD	O	0/3.3 V DC	MM control signal
	50	ASIST_CL1	O	0/24 V DC	ASCL1: On/Off

Connector	Pin	Signal	I/O	Voltage	Description
YC5	1	GND	-	-	Ground
Connected to feed PWB 1	2	M_TEMP	-	-	Not used
	3	LOOP_SENS	I	0/3.3 V DC	LPS: On/Off
	4	GND	-	-	Ground
	5	EDGE_FAN_H	O	0/24 V DC	FUFM: On/Off
	6	DU1_MOT_PD	O	0/3.3 V DC	DUM1 control signal
	7	DU1_MOT_CLK	O	0/3.3 V DC (pulse)	DUM1 clock signal
	8	DU1_MOT_REM(CL_H)	O	0/3.3 V DC	DUM1/DUCL1: On/Off
	9	GND	-	-	Ground
	10	EXIT_FAN	O	0/24 V DC	EFM: On/Off
	11	DU_ENTER_SENS	I	0/3.3 V DC	DUS1: On/Off
	12	TCON_SET	-	-	Not used
	13	GND	-	-	Ground
	14	TRANS_REM	O	0/3.3 V DC	TRCM: On/Off
	15	TRANS_CLK	O	0/3.3 V DC (pulse)	TRCM clock signal
	16	TRANS_RDY	I	0/3.3 V DC	TRCM ready signal
	17	TRANS_DIR	O	0/3.3 V DC	TRCM drive switch signal
	18	TRANS_BRK	O	0/3.3 V DC	TRCM break signal
	19	GND	-	-	Ground
	20	DRM_BK_REM	-	-	Not used
	21	DRM_BK_RDY	-	-	Not used
	22	DRM_BK_DIR	-	-	Not used
	23	DRM_BK_BRK	-	-	Not used
	24	GND	-	-	Ground
	25	DLP_BK_REM	-	-	Not used
	26	DLP_BK_CLK	-	-	Not used
	27	DLPT_BK_RDY	-	-	Not used
	28	DLP_BK_DIR	-	-	Not used
	29	GND	-	-	Ground
	30	DRM_CLR_REM	-	-	Not used
	31	DRM_BK_CLR_CLK	-	-	Not used
	32	DRM_CLR_RDY	-	-	Not used
	33	DRM_CLR_DIR	-	-	Not used
	34	GND	-	-	Ground
	35	DLP_CLR_REM	-	-	Not used

Connector	Pin	Signal	I/O	Voltage	Description
YC5	36	DLP_CLR_CLK	-	-	Not used
Connected to feed PWB 1	37	DLP_CLR_RDY	-	-	Not used
	38	DLP_CLR_DIR	-	-	Not used
	39	GND	-	-	Ground
	40	REG_MOT_PD	O	0/3.3 V DC	RM control signal
	41	REG_MOT_CLK	O	0/3.3 V DC (pulse)	RM clock signal
	42	REG_MOT_REM(CL)	O	0/3.3 V DC	RM/RCL: On/Off
	43	GND	-	-	Ground
	44	IH_FAN_L	O	0/24 V DC	IHFM: On/Off
	45	IH_FAN_H	O	0/24 V DC	IHFM: On/Off
	46	IH_PWB_FAN_ALM	I	0/3.3 V DC	IHFM alarm signal
	47	POWER_OFF	O	0/3.3 V DC	Power off signal
	48	DRM_HEAT	-	-	Not used
	49	GND	-	-	Ground
	50	GND	-	-	Ground
YC6	1	GND	-	-	Ground
Connected to feed PWB 1	2	JOB_SET	I	0/3.3 V DC	Job separator set signal
	3	JOB_MOT_REM	O	0/3.3 V DC	JSEM: On/Off
	4	JOB_MOT_CLK	O	0/3.3 V DC (pulse)	JSEM clock signal
	5	JOB_MOT_DIR	O	0/3.3 V DC	JSEM drive switch signal
	6	JOB_OPEN_SENS	I	0/3.3 V DC	JSOCS: On/Off
	7	JOB_SOL_REM	O	0/24 V DC	JSFSSOL: On/Off
	8	GND	-	-	Ground
	9	MAIN_HEAT	-	-	Not used
	10	SUB_HEAT_REM	-	-	Not used
	11	ZEROC	-	-	Not used
	12	FSR_RELAY	O	0/3.3 V DC	Fuser relay signal
	13	PRESS_REM	-	-	Not used
	14	EXIT_REAR_FAN_L	O	0/24 V DC	ERFM: On/Off
	15	EXIT_REAR_FAN_H	O	0/24 V DC	ERFM: On/Off
	16	GND	-	-	Ground
	17	GND	-	-	Ground

Connector	Pin	Signal	I/O	Voltage	Description
YC6	18	FSR_MOT_REM	O	0/3.3 V DC	FUM: On/Off
Connected to feed PWB 1	19	FSR_MOT_CLK		0/3.3 V DC (pulse)	FUM clock signal
	20	FSR_MOT_RDY	O	0/3.3 V DC	FUM ready signal
	21	FSR_MOT_DIR	O	0/3.3 V DC	FUM drive switch signal
	22	FSR_MOT_BARKE	O	0/3.3 V DC	FUM brake signal
	23	GND	-	-	Ground
	24	MPF_TABLE	I	0/3.3 V DC	MPTSW: On/Off
	25	MPF_WID1	I	0/3.3 V DC	MPPWSW: On/Off
	26	MPF_WID2	I	0/3.3 V DC	MPPWSW: On/Off
	27	MPF_WID3	I	0/3.3 V DC	MPPWSW: On/Off
	28	MPF_LNG	I	0/3.3 V DC	MPPLSW: On/Off
	29	GND	-	-	Ground
	30	MPF_PPR	I	0/3.3 V DC	MPPS: On/Off
	31	MPF_UP	I	0/3.3 V DC	MPLS1: On/Off
	32	MPF_DOWN	I	0/3.3 V DC	MPLS2: On/Off
	33	MPF_JAM	I	0/3.3 V DC	MPFS: On/Off
	34	MPF_CL	O	0/24 V DC	MPPFCL: On/Off
	35	MPF_LIFT2	O	0/24 V DC	MPLM: On/Off
	36	MPF_LIFT1	O	0/24 V DC	MPLM: On/Off
	37	GND	-	-	Ground
	38	TC_MOT_LOCK	-	-	Not used
	39	TC_TONER_LED	-	-	Not used
	40	TC_TONER_FULL	-	-	Not used
	41	TC_TONER_VCONT	-	-	Not used
	42	INTER_LOCK	-	-	Not used
	43	DU2_MOT_PD	O	0/3.3 V DC	DUM2 control signal
	44	DU2_MOT_CLK	O	0/3.3 V DC (pulse)	DUM2 clock signal
	45	DU2_MOT_REM	O	0/3.3 V DC	DUM2/DUCL2: On/Off
	46	GND	-	-	Ground
	47	DU_OPEN	I	0/3.3 V DC	DUCSW: On/Off
	48	DU_FAN	-	-	Not used
	49	PRESS_RLS_MOT_REM1	O	0/24 V DC	TRRM: On/Off
	50	PRESS_RLS_MOT_REM2	O	0/24 V DC	TRRM: On/Off

Connector	Pin	Signal	I/O	Voltage	Description
YC6	51	PRESS_RLS_SENS	I	0/3.3 V DC	TRRS: On/Off
Connected to feed PWB 1	52	DU_SENS	I	0/3.3 V DC	DUS2: On/Off
	53	BELT_JAM_SENS	-	-	Not used
	54	GND	-	-	Ground
	55	CLN_SOL_RET	O	0/24 V DC	CLSOL: On/Off (RET)
	56	CLN_SOL_REM	O	0/24 V DC	CLSOL: On/Off (ACT)
	57	REG_SENS_R_S (BK)	I	Analog	IDS2 detection signal
	58	REG_SENS_R_P (BK)	I	Analog	IDS2 detection signal
	59	REG_R_LED	O	Analog	IDS2 control signal
	60	GND	-	-	Ground
	61	REG_SENS_F_S	I	Analog	IDS1 detection signal
	62	REG_SENS_F_P	I	Analog	IDS1 detection signal
	63	REG_F_LED	O	Analog	IDS1 control signal
	64	GND	-	-	Ground
YC7	1	GND	-	-	Ground
Connected to front PWB	2	WTNR_SET(M)/ NEAR(V)	-	-	Not used
	3	INTER_LOCK	-	-	Not used
	4	IH_CORE_SENS	-	-	Not used
	5	IH_CORE_MOT_REM	-	-	Not used
	6	IH_CORE_CLK	-	-	Not used
	7	WTNR_LED	O	0/3.3 V DC (pulse)	WTS1 LED emitter signal
	8	IH_COIL_FAN_ALM	I	0/3.3 V DC	FUFFM alarm signal
	9	IH_COIL_FAN_H	O	0/24 V DC	FUFFM: On/Off
	10	IH_COIL_FAN_L	O	0/24 V DC	FUFFM: On/Off
	11	EXIT_FAN	O	0/24 V DC	EFFM: On/Off
	12	CONTAIN_FAN	-	-	Not used
	13	JUNC_SOL_REM	O	0/24 V DC	FSSOL: On/Off (ACT)
	14	JUNC_SOL_RET	O	0/24 V DC	FSSOL: On/Off (RET)
	15	GND	-	-	Ground
	16	EXIT_PAPE_SENS	I	0/3.3 V DC	EFS: On/Off

Connector	Pin	Signal	I/O	Voltage	Description
YC7	17	EXIT_FEED_SENS	I	0/3.3 V DC	SBS: On/Off
Connected to front PWB	18	SB_MOT_REM	O	0/3.3 V DC	EM: On/Off
	19	SB_MOT_PH	O	0/3.3 V DC	EM control signal
	20	SB_MOT_CLK	O	0/3.3 V DC (pulse)	EM clock signal
	21	SB_MOT_PD	O	0/3.3 V DC	EM control signal
	22	SB_MOT_DIR	O	0/3.3 V DC	EM drive switch signal
	23	GND	-	-	Ground
	24	WINR_FULL_COUNT	O	0/24 V DC	DEVFM2: On/Off
	25	THOP_DIR	O	0/24 V DC	DEVFM2: On/Off
	26	DLP_FAN_CLR_H	O	0/24 V DC	DEVFM1: On/Off
	27	DLP_FAN_CLR_L	O	0/24 V DC	DEVFM1: On/Off
	28	WTNR_FULL	I	Analog	WTS2 detection signal
	29	WTNR_NEAR(M)	I	Analog	WTS2 detection signal
	30	WTNR_NEAR_VCON	O	0/3.3 V DC	WTS2 control signal
	31	GND	-	-	Ground
	32	ROT_MOT_REM	-	-	Not used
	33	ROT_MOT_CLK	-	-	Not used
	34	ROT_MOT_PD	-	-	Not used
	35	ROT_MOT_DIR	-	-	Not used
	36	ROT_HP_SENS	-	-	Not used
	37	THOP_MOT_Bk	-	-	Not used
	38	THOP_MOT_M	-	-	Not used
	39	THOP_MOT_C	-	-	Not used
	40	THOP_MOT_Y	-	-	Not used
	41	GND	-	-	Ground
	42	ENCODE_ Bk	-	-	Not used
	43	ENCODE_M	-	-	Not used
	44	ENCODE_C	-	-	Not used
	45	ENCODE_Y	-	-	Not used
	46	THOP_ Bk	-	-	Not used
	47	THOP_M	-	-	Not used
	48	THOP_C	-	-	Not used
	49	THOP_Y	-	-	Not used
	50	GND	-	-	Ground

Connector	Pin	Signal	I/O	Voltage	Description
YC8	1	GND	-	-	Ground
Connected to high voltage PWB 2	2	GND	-	-	Ground
	3	SP_CONT	O	Analog	Separation bias control voltage
	4	T2_CONT	O	Analog	Secondary transfer bias control voltage
	5	SP_OFF_REM	O	0/3.3 V DC	Separation bias: On/Off
	6	T_REM	O	0/3.3 V DC	Secondary transfer bias: On/Off
	7	FB_CNT	O	0/3.3 V DC	Primary transfer cleaning bias: On/Off
	8	T1_CONT_Bk	O	Analog	Primary transfer bias K control voltage
	9	T1_CONT_M	O	Analog	Primary transfer bias M control voltage
	10	T1_CONT_C	O	Analog	Primary transfer bias C control voltage
	11	T1_CONT_Y	O	Analog	Primary transfer bias Y control voltage
	12	T1_CLR_OFF_REM	O	0/3.3 V DC	Primary transfer control signal
YC9	1	MOT_CLK	O	0/3.3 V DC (pulse)	MCPWB clock signal
Connected to motor control PWB	2	MOT_SDO	O	0/3.3 V DC (pulse)	MCPWB serial communication data signal
	3	MOT_SEL	O	0/3.3 V DC	MCPWB select signal
	4	MOT_SDI	I	0/3.3 V DC (pulse)	MCPWB serial communication data signal
	5	MOT_RDY	I	0/3.3 V DC	MCPWB ready signal
	6	EMERGENCY	O	0/3.3 V DC	MCPWB control signal
	7	BLT_SPEED	O	0/3.3 V DC	TBLS: On/Off
	8	BLT_INDEX	-	-	Not used
	9	DRM_INDEX_BK	O	0/3.3 V DC	DRM-K control signal
	10	DRM_INDEX_M	O	0/3.3 V DC	DRM-M control signal
	11	DRM_INDEX_C	O	0/3.3 V DC	DRM-C control signal
	12	DRM_INDEX_Y	O	0/3.3 V DC	DRM-Y control signal
	13	GND	-	-	Ground
	14	GND	-	-	Ground
	15	+5V	O	5 V DC	5 V DC power to MCPWB
	16	+5V	O	5 V DC	5 V DC power to MCPWB
	17	BLT_BRAKE	-	-	Not used
	18	BLT_VM	-	-	Not used
	19	BLT_REM	-	-	Not used

Connector	Pin	Signal	I/O	Voltage	Description
YC9	20	MOT_DATA_SET	O	0/3.3 V DC	MCPWB control signal
Connected to motor control PWB	21	DRM_ON	O	0/3.3 V DC	MCPWB control signal
	22	BLT_FG	-	-	Not used
YC10	1	GND	-	-	Ground
Connected to front PWB	2	ECO_SENS	I	0/3.3 V DC	DRM-K control signal
	3	ERS_Bk	O	0/24 V DC	CL-K: On/Off
	4	TPD_Bk_1	I	Analog	DEVPWB-K detection signal
	5	DLP_VCONT_Bk_1	O	0/3.3 V DC	DEVPWB-K control signal
	6	TPD_TEMP_Bk	I	Analog	Developer thermistor K detection signal
	7	GND	-	-	Ground
	8	DRM_INDEX_M	I	0/3.3 V DC	DRM-M control signal
	9	ERS_M	O	0/24 V DC	CL-M: On/Off
	10	TPD_M_1	I	Analog	DEVPWB-M detection signal
	11	DLP_VCONT_M_1	O	0/3.3 V DC	DEVPWB-M control signal
	12	TPD_TEMP_M	I	Analog	Developer thermistor M detection signal
	13	GND	-	-	Ground
	14	DRM_INDEX_C	I	0/3.3 V DC	DRM-C control signal
	15	ERS_C	O	0/24 V DC	CL-C: On/Off
	16	TPD_C_1	I	Analog	DEVPWB-C detection signal
	17	DLP_VCONT_C_1	O	0/3.3 V DC	DEVPWB-C control signal
	18	TPD_TEMP_C	I	Analog	Developer thermistor C detection signal
	19	GND	-	-	Ground
	20	TN_CLK	O	0/3.3 V DC (pulse)	Clock signal
	21	GND	-	-	Ground
	22	EEP_SCL1	O	0/3.3 V DC (pulse)	EEPROM clock signal
	23	GND	-	-	Ground
	24	EEP_SDA1	I/O	0/3.3 V DC (pulse)	EEPROM data signal
	25	GND	-	-	Ground
	26	TPD_Y_1	I	Analog	TS-Y detection signal
	27	DLP_VCONT_Y_1	O	0/3.3 V DC	TS-Y control signal
	28	TPD_TEMP_Y	I	Analog	Developer thermistor Y detection signal

Connector	Pin	Signal	I/O	Voltage	Description
YC10	29	ERS_Y	O	0/24 V DC	CL-Y: On/Off
Connected to front PWB	30	DRM_INDEX_Y	I	0/3.3 V DC	DRM-Y control signal
	31	FRONT_OPEN	I	0/3.3 V DC	FRCSW: On/Off
	32	GND	-	-	Ground
	33	I2C_SCL	O	0/3.3 V DC (pulse)	EEPROM clock signal
	34	GND	-	-	Ground
	35	I2C_SDA	I/O	0/3.3 V DC (pulse)	EEPROM data signal
	36	GND	-	-	Ground
	37	LSU_FAN_REM	O	0/24 V DC	LSUFM: On/Off
	38	CLEAN_MOT_LOCK	I	0/3.3 V DC	WTM lock signal
	39	CLEAN_MOT_REM	O	0/24 V DC	WTM: On/Off
	40	GND	-	-	Ground
YC11	1	GND	-	-	Ground
Connected to LSU relay PWB	2	DATA_2PBK(LVDS)	O	0/3.3 V DC (pulse)	Video data signal K (P)
	3	DATA_2NBK(LVDS)	O	0/3.3 V DC (pulse)	Video data signal K (N)
	4	GND	-	-	Ground
	5	GAIN_FIX_BK	O	0/3.3 V DC	APCPWB-K control signal
	6	PARA_SIG_P2_BK	O	0/3.3 V DC	APCPWB-K control signal
	7	PARA_SIG_P1_BK	O	0/3.3 V DC	APCPWB-K control signal
	8	PARA_SIG_P0_BK	O	0/3.3 V DC	APCPWB-K control signal
	9	INT_ST_1_BK	O	0/3.3 V DC	APCPWB-K control signal
	10	INT_ST_2_BK	O	0/3.3 V DC	APCPWB-K control signal
	11	PARA_SIG_P3_2BK	O	0/3.3 V DC	APCPWB-K control signal
	12	GND	-	-	Ground
	13	DATA_4PBK(LVDS)	O	0/3.3 V DC (pulse)	Video data signal K (P)
	14	DATA_4NBK(LVDS)	O	0/3.3 V DC (pulse)	Video data signal K (N)
	15	GND	-	-	Ground
	16	DATA_3PBK(LVDS)	O	0/3.3 V DC (pulse)	Video data signal K (P)

Connector	Pin	Signal	I/O	Voltage	Description
YC11	17	DATA_3NBK(LVDS)	O	0/3.3 V DC (pulse)	Video data signal K (N)
Connected to LSU relay PWB	18	SGND	-	-	Ground
	19	DATA_2P_M(LVDS)	O	0/3.3 V DC (pulse)	Video data signal M (P)
	20	DATA_2N_M(LVDS)	O	0/3.3 V DC (pulse)	Video data signal M (N)
	21	GND	-	-	Ground
	22	GAIN_FIX_M	O	0/3.3 V DC	APCPWB-M control signal
	23	PALA_STG_P2_M	O	0/3.3 V DC	APCPWB-M control signal
	24	PALA_STG_P1_M	O	0/3.3 V DC	APCPWB-M control signal
	25	PALA_STG_P0_M	O	0/3.3 V DC	APCPWB-M control signal
	26	INT_ST_M	O	0/3.3 V DC	APCPWB-M control signal
	27	GND	-	-	Ground
	28	DATA_2P_C(LVDS)	O	0/3.3 V DC (pulse)	Video data signal C (P)
	29	DATA_2N_C(LVDS)	O	0/3.3 V DC (pulse)	Video data signal C (N)
	30	GND	-	-	Ground
	31	GAIN_FIX_C	O	0/3.3 V DC	APCPWB-C control signal
	32	PALA_STG_P2_C	O	0/3.3 V DC	APCPWB-C control signal
	33	PALA_STG_P1_C	O	0/3.3 V DC	APCPWB-C control signal
	34	PALA_STG_P0_C	O	0/3.3 V DC	APCPWB-C control signal
	35	INT_ST_C	O	0/3.3 V DC	APCPWB-C control signal
	36	GND	-	-	Ground
	37	DATA_2P_Y(LVDS)	O	0/3.3 V DC (pulse)	Video data signal Y (P)
	38	DATA_2N_Y(LVDS)	O	0/3.3 V DC (pulse)	Video data signal Y (N)
	39	GND	-	-	Ground
	40	GAIN_FIX_Y	O	0/3.3 V DC	APCPWB-Y control signal
	41	PALA_STG_P2_Y	O	0/3.3 V DC	APCPWB-Y control signal
	42	PALA_STG_P1_Y	O	0/3.3 V DC	APCPWB-Y control signal
	43	PALA_STG_P0_Y	O	0/3.3 V DC	APCPWB-Y control signal
	44	INT_ST_Y	O	0/3.3 V DC	APCPWB-Y control signal
	45	GND	-	-	Ground
	46	EEPROM_CS_1_BK	I/O	0/3.3 V DC (pulse)	APCPWB-K EEPROM data signal
	47	IDD_CS_1_BK	O	0/3.3 V DC	APCPWB-K control signal

Connector	Pin	Signal	I/O	Voltage	Description
YC11	48	EEPROM_CS_2_BK	I/O	0/3.3 V DC (pulse)	APCPWB-K EEPROM data signal
Connected to LSU relay PWB	49	IDD_CS_2_BK	O	0/3.3 V DC	APCPWB-K control signal
	50	EEPROM_CS_M	I/O	0/3.3 V DC (pulse)	APCPWB-M EEPROM data signal
	51	IDD_CS_M	O	0/3.3 V DC	APCPWB-M control signal
	52	EEPROM_CS_C	I/O	0/3.3 V DC (pulse)	APCPWB-C EEPROM data signal
	53	IDD_CS_C	O	0/3.3 V DC	APCPWB-C control signal
	54	EEPROM_CS_Y	I/O	0/3.3 V DC (pulse)	APCPWB-Y EEPROM data signal
	55	IDD_CS_Y	O	0/3.3 V DC	APCPWB-Y control signal
	56	SGND	-	-	Ground
	57	MSET_N	O	0/3.3 V DC	Control signal
	58	SGND	-	-	Ground
	59	SDO	O	0/3.3 V DC (pulse)	Serial communication data signal
	60	SGND	-	-	Ground
	61	SDI	I	0/3.3 V DC (pulse)	Serial communication data signal
	62	SGND	-	-	Ground
	63	CLK	O	0/3.3 V DC (pulse)	Clock signal
	64	SGND	-	-	Ground
YC12	1	CLK_BK	O	0/3.3 V DC (pulse)	PM-K clock signal
Connected to LSU relay PWB	2	LOCK_BK	I	0/3.3 V DC	PM-K lock signal
	3	REM_BK	O	0/24 V DC	PM-K: On/Off
	4	GND	-	-	Ground
	5	DATA_1PBK(LVDS)	O	0/3.3 V DC (pulse)	Video data signal K (P)
	6	DATA_1NBK(LVDS)	O	0/3.3 V DC (pulse)	Video data signal K (N)
	7	GND	-	-	Ground
	8	SDCLK_BK	O	0/3.3 V DC (pulse)	APCPWB-K clock signal
	9	GND	-	-	Ground
	10	PARA_SIG_P4_BK	O	0/3.3 V DC	APCPWB-K control signal
	11	PARA_SIG_P3_BK	O	0/3.3 V DC	APCPWB-K control signal
	12	CUALM_BK	I	0/3.3 V DC	APCPWB-K alarm signal
	13	LSU_TH_BK	I	Analog	LSU thermistor K detection signal
	14	BD_BK	I	0/3.3 V DC (pulse)	Horizontal synchronization signal K
	15	GND	-	-	Ground
	16	CLK_M	O	0/3.3 V DC (pulse)	PM-M clock signal

Connector	Pin	Signal	I/O	Voltage	Description
YC12	17	LOCK_M	I	0/3.3 V DC	PM-M lock signal
Connected to LSU relay PWB	18	REM_M	O	0/24 V DC	PM-M: On/Off
	19	GND	-	-	Ground
	20	DATA_1P_M(LVDS)	O	0/3.3 V DC (pulse)	Video data signal M (P)
	21	DATA_1N_M(LVDS)	O	0/3.3 V DC (pulse)	Video data signal M (N)
	22	GND	-	-	Ground
	23	SDCLK_M	O	0/3.3 V DC (pulse)	APCPWB-M clock signal
	24	GND	-	-	Ground
	25	PARA_SIG_P4_M	O	0/3.3 V DC	APCPWB-M control signal
	26	PARA_SIG_P3_M	O	0/3.3 V DC	APCPWB-M control signal
	27	CUALM_M	I	0/3.3 V DC	APCPWB-M alarm signal
	28	LSU_TH_M	I	Analog	LSU thermistor M detection signal
	29	BD_M	I	0/3.3 V DC (pulse)	Horizontal synchronization signal M
	30	GND	-	-	Ground
	31	CLK_C	O	0/3.3 V DC (pulse)	PM-C clock signal
	32	LOCK_C	I	0/3.3 V DC	PM-C lock signal
	33	REM_C	O	0/24 V DC	PM-C: On/Off
	34	GND	-	-	Ground
	35	DATA_1P_C	O	0/3.3 V DC (pulse)	Video data signal C (P)
	36	DATA_1N_C	O	0/3.3 V DC (pulse)	Video data signal C (N)
	37	GND	-	-	Ground
	38	SDCLK_C	O	0/3.3 V DC (pulse)	APCPWB-C clock signal
	39	GND	-	-	Ground
	40	PARA_SIG_P4_C	O	0/3.3 V DC	APCPWB-C control signal
	41	PARA_SIG_P3_C	O	0/3.3 V DC	APCPWB-C control signal
	42	CUALM_C	I	0/3.3 V DC	APCPWB-C alarm signal
	43	LSU_TH_C	I	Analog	LSU thermistor C detection signal
	44	BD_C	I	0/3.3 V DC (pulse)	Horizontal synchronization signal C
	45	GND	-	-	Ground
	46	CLK_Y	O	0/3.3 V DC (pulse)	PM-Y clock signal
	47	LOCK_Y	I	0/3.3 V DC	PM-Y lock signal
	48	REM_Y	O	0/24 V DC	PM-Y: On/Off
	49	GND	-	-	Ground
	50	DATA_1P_Y	O	0/3.3 V DC (pulse)	Video data signal Y (P)
	51	DATA_1N_Y	O	0/3.3 V DC (pulse)	Video data signal Y (N)
	52	GND	-	-	Ground

Connector	Pin	Signal	I/O	Voltage	Description
YC12	53	SDCLK_Y	O	0/3.3 V DC (pulse)	APCPWB-Y clock signal
Connected to LSU relay PWB	54	GND	-	-	Ground
	55	PARA_SIG_P4_Y	O	0/3.3 V DC	APCPWB-Y control signal
	56	PARA_SIG_P3_Y	O	0/3.3 V DC	APCPWB-Y control signal
	57	CUALM_Y	I	0/3.3 V DC	APCPWB-Y alarm signal
	58	LSU_TH_Y	I	Analog	LSU thermistor Y detection signal
	59	BD_Y	I	0/3.3 V DC (pulse)	Horizontal synchronization signal Y
	60	GND	-	-	Ground
YC13	1	GND	-	-	Ground
Connected to feed PWB 1	2	GND	-	-	Ground
	3	3.3V3	I	3.3 V DC	3.3 V DC power from FPWB1
	4	3.3V2	I	3.3 V DC	3.3 V DC power from FPWB1
YC15	1	GND	-	-	Ground
Connected to LSU relay PWB	2	+3.3V2	O	3.3 V DC	3.3 V DC power to LSURPWB
	3	GND	-	-	Ground
	4	GND	-	-	Ground
	5	+5V_AN	O	5 V DC	5 V DC power to LSURPWB
	6	+5V_AN	O	5 V DC	5 V DC power to LSURPWB
YC16	1	GND	-	-	Ground
Connected to high voltage PWB 1	2	AC_MAIN_CLK	O	0/3.3 V DC (pulse)	AC charger roller Y clock signal
	3	DC_MAIN_REM	O	0/3.3 V DC	DC main charger Y: On/Off
	4	DC_MAIN_CNT_Y	O	PWM	DC charger roller Y control signal
	5	MAIN_IDC_Y	O	PWM	DC charger roller Y control signal
	6	AC_SLV_CLK_Y	O	0/3.3 V DC (pulse)	AC sleeve bias Y clock signal
	7	DC_SLV_CNT_Y	O	PWM	DC sleeve bias Y control voltage
	8	DC_MAG_CNT_Y	O	PWM	DC magnet bias Y control voltage
	9	AC_SLV_CNT_Y	O	PWM	AC sleeve bias Y control voltage
	10	AC_MAIN_CNT_Y	O	PWM	AC charger roller Y control signal
	11	DISCHARGE_Y	I	PWM	Main charger Y control signal
	12	AC_MAG_CNT_Y	O	0/3.3 V DC (pulse)	AC magnet bias Y control voltage
	13	AC_MAG_CLK_Y	O	0/3.3 V DC (pulse)	AC magnet bias Y clock signal
	14	DC_REC_CNT	O	PWM	DC bias Y control voltage
	15	N.C	-	-	Not used
	16	DC_REC_REM	O	PWM	DC bias C control voltage

Connector	Pin	Signal	I/O	Voltage	Description
YC16	17	AC_MAG_CLK_C	O	0/3.3 V DC (pulse)	AC magnet bias C clock signal
Connected to high voltage PWB 1	18	AC_MAG_CNT_C	O	0/3.3 V DC (pulse)	AC magnet bias C control voltage
	19	DISCHARGE_C	I	PWM	Main charger C control signal
	20	AC_MAIN_CNT_C	O	PWM	AC charger roller C control signal
	21	AC_SLV_CNT_C	O	PWM	AC sleeve bias C control voltage
	22	DC_MAG_CNT_C	O	PWM	DC magnet bias C control voltage
	23	DC_SLV_CNT_C	O	PWM	DC sleeve bias C control voltage
	24	AC_SLV_CLK_C	O	0/3.3 V DC (pulse)	AC sleeve bias C clock signal
	25	DC_MAG_REM	O	0/3.3 V DC	DC main charger C: On/Off
	26	MAIN_IDC_C	O	PWM	DC charger roller C control signal
	27	DC_MAIN_CNT_C	O	PWM	DC charger roller C control signal
	28	GND	-	-	Ground
YC17	1	GND	-	-	Ground
Connected to high voltage PWB 1	2	DC_MAIN_CNT_M	O	PWM	DC charger roller Y control signal
	3	MAIN_IDC_M	O	PWM	DC charger roller M control signal
	4	AC_SLV_CLK_M	O	0/3.3 V DC (pulse)	AC sleeve bias M clock signal
	5	DC_SLV_CNT_M	O	PWM	DC sleeve bias M control voltage
	6	DC_MAG_CNT_M	O	PWM	DC magnet bias M control voltage
	7	AC_SLV_CNT_M	O	PWM	AC sleeve bias M control voltage
	8	AC_MAIN_CNT_M	O	PWM	AC charger roller M control signal
	9	DISCHARGE_M	I	PWM	Main charger M control signal
	10	AC_MAG_CNT_M	O	0/3.3 V DC (pulse)	AC magnet bias M control voltage
	11	AC_MAG_CLK_M	O	0/3.3 V DC (pulse)	AC magnet bias M clock signal
	12	AC_MAG_CLK_Bk	O	PWM	DC charger roller K control signal
	13	AC_MAG_CNT_Bk	O	PWM	DC charger roller K control signal
	14	DISCHARGE_Bk	I	PWM	Main charger K control signal
	15	AC_SLV_CNT_Bk	O	0/3.3 V DC (pulse)	AC sleeve bias K clock signal
	16	DC_MAG_CNT_Bk	O	PWM	DC sleeve bias K control voltage
	17	DC_SLV_CNT_Bk	O	PWM	DC magnet bias K control voltage
	18	AC_SLV_CLK_Bk	O	PWM	AC sleeve bias K control voltage

Connector	Pin	Signal	I/O	Voltage	Description
YC17	19	AC_MAIN_CNT_Bk	O	PWM	AC charger roller K control signal
Connected to high voltage PWB 1	20	MAIN_IDC_Bk	O	PWM	DC charger roller K control signal
	21	DC_MAIN_CNT_Bk	O	PWM	DC charger roller K control signal
	22	GND	-	-	Ground
YC18	1	DF_CLK	O	0/3.3 V DC (pulse)	DFMPWB clock signal
Connected to 1000-sheet/ 4000-sheet finisher	2	DF_SDO	O	0/3.3 V DC (pulse)	DFMPWB serial communication data signal
	3	DF_SEL	O	0/3.3 V DC	DFMPWB select signal
	4	DF_SDI	O	0/3.3 V DC (pulse)	DFMPWB serial communication data signal
	5	DF_RDY	I	0/3.3 V DC	DFMPWB ready signal
	6	DF_DET	O	0/3.3 V DC	DFMPWB detection signal
	7	GND	-	-	Ground
YC19	A1	PF_CLK	O	0/3.3 V DC (pulse)	PFMPWB clock signal
Connected to paper feeder/ large capacity feeder, toner fan motor 1*/2*, belt fan motor 1 and exhaust fan motor 1*/2* (*:45ppm/ 55ppm model only)	A2	PF_SDO	O	0/3.3 V DC (pulse)	PFMPWB serial communication data signal
	A3	PF_SEL	O	0/3.3 V DC	PFMPWB select signal
	A4	PF_SDI	I	0/3.3 V DC (pulse)	PFMPWB serial communication data signal
	A5	PF_RDY	I	0/3.3 V DC	PFMPWB ready signal
	A6	PF_PAUSE	O	0/3.3 V DC	PFMPWB pause signal
	A7	PF_CAS1_OPEN	I	0/3.3 V DC	PFMPWB control signal
	A8	PF_CAS2_OPEN	I	0/3.3 V DC	PFMPWB control signal
	A9	3.3V4	O	3.3 V DC	3.3 V DC power to PFMPWB
	A10	GND	-	-	Ground
	A11	GND	-	-	Ground
	A12	TN_FAN1	O	0/24 V DC	TFM1: On/Off
	A13	24V1	O	24 V DC	24 V DC power to TFM1
	A14	TN_FAN2	O	0/24 V DC	TFM2: On/Off
	A15	24V1	O	24 V DC	24 V DC power to TFM2
	A16	LVU_FAN1	-	-	Not used
	A17	24V1	-	-	Not used
	A18	LVU_FAN2	-	-	Not used
	A19	24V1	-	-	Not used

Connector	Pin	Signal	I/O	Voltage	Description
YC19	B1	SIDE_CLK	O	0/3.3 V DC (pulse)	PFMPWB clock signal (side)
Connected to paper feeder/ large capac-ity feeder, toner fan motor 1/2, belt fan motor 1/2 and exhaust fan motor 1/2	B2	SIDE_SDO	O	0/3.3 V DC (pulse)	PFMPWB serial communication data signal (side)
	B3	SIDE_SEL	O	0/3.3 V DC	PFMPWB select signal (side)
	B4	SIDE_SDI	I	0/3.3 V DC (pulse)	PFMPWB serial communication data signal (side)
	B5	SIDE_RDY	I	0/3.3 V DC	PFMPWB ready signal (side)
	B6	SIDE_PAUSE	O	0/3.3 V DC	PFMPWB pause signal (side)
	B7	CAS1_OPEN	I	0/3.3 V DC	PFMPWB control signal (side)
	B8	CAS2_OPEN	I	0/3.3 V DC	PFMPWB control signal (side)
	B9	MULTI_OPEN	O	0/3.3 V DC	PFMPWB control signal (side)
	B10	3.3V4	O	3.3 V DC	3.3 V DC power to PFMPWB (side)
	B11	GND	-	-	Ground
	B12	24V1	O	24 V DC	24 V DC power to BLFM1
	B13	BELT_FAN1	O	0/24 V DC	BLFM1: On/Off
	B14	24V1	-	-	Not used
	B15	BELT_FAN2	-	-	Not used
	B16	DLP_FAN1	O	0/24 V DC	EXFM1: On/Off
	B17	24V1	O	24 V DC	24 V DC power to EXFM1
	B18	DLP_FAN2	O	0/24 V DC	EXFM2: On/Off
	B19	24V1	O	24 V DC	24 V DC power to EXFM2
YC20	1	DECAL_HP	-	-	Not used
Connected to bridge unit	2	GUIDE_REM	-	-	Not used
	3	GUIDE_CLK	-	-	Not used
	4	GUIDE_PD	-	-	Not used
	5	GUIDE_DIR	-	-	Not used
	6	DECAL_REM	-	-	Not used
	7	DECAL_PH	-	-	Not used
	8	DECAL_CLK	-	-	Not used
	9	DECAL_PD	-	-	Not used
	10	DECAL_DIR	-	-	Not used
	11	24V1	O	24 V DC	24 V DC power to BRSOL
	12	EXIT_SOL_REM	O	0/24 V DC	BRSOL: On/Off (ACT)
	13	EXIT_SOL_RET	O	0/24 V DC	BRSOL: On/Off (RET)
	14	GND	-	-	Ground
	15	EXIT_COV_OPE N	I	0/3.3 V DC	BRECSW: On/Off

Connector	Pin	Signal	I/O	Voltage	Description
YC20	16	GND	-	-	Ground
Connected to bridge unit	17	EXIT_SENS	I	0/3.3 V DC	BRES: On/Off
	18	5V4	O	5 V DC	5 V DC power to BRES
	19	5V	-	-	Not used
	20	BRIDGE2 _REM	O	0/3.3 V DC	BRCM2: On/Off
	21	BRIDGE_ PH	O	0/3.3 V DC	BRCM2 control signal
	22	BRIDGE2_CLK	O	0/3.3 V DC (pulse)	BRCM2 clock signal
	23	BRIDGE2 _PD	O	0/3.3 V DC	BRCM2 control signal
	24	BRIDGE2_DIR	O	0/3.3 V DC	BRCM2 drive switch signal
	25	BRIDGE1_REM	O	0/3.3 V DC	BRCM2: On/Off
	26	BRIDGE1_PH	O	0/3.3 V DC	BRCM1 control signal
	27	BRIDGE1 _CLK	O	0/3.3 V DC (pulse)	BRCM1 clock signal
	28	BRIDGE1 _PD	O	0/3.3 V DC	BRCM1 control signal
	29	BRIDGE1 _DIR	O	0/3.3 V DC	BRCM1 drive switch signal
	30	BRIDGE_SENS 2	I	0/3.3 V DC	BRCS2: On/Off
	31	BRIDGE_OPEN	I	0/3.3 V DC	BRCSW: On/Off
	32	BRIDGE_SENS 1	I	0/3.3 V DC	BRCS1: On/Off
	33	GND	-	-	Ground
	34	5V	O	5 V DC	5 V DC power to BRPWB
	35	GND	-	-	Ground
	36	GND	-	-	Ground
	37	24V1	O	24 V DC	24 V DC power to BRPWB
	38	24V1	O	24 V DC	24 V DC power to BRPWB
YC21	1	CCW	O	24 V DC	LSUCM: On/Off (CCW)
Connected to LSU clean-ing motor	2	CW	O	24 V DC	LSUCM: On/Off (CW)
YC22	1	LVU_FAN	O	0/24 V DC	PSFM: On/Off
Connected to power source fan motor	2	24V1	O	24 V DC	24 V DC power to PSFM
		3.3V2	I	3.3 V DC	24 V DC power from SPWB
		GND	-	-	Ground

Connector	Pin	Signal	I/O	Voltage	Description
YC23	1	24V	O	24 V DC	24 V DC power to coin vender
Connected to coin vender	2	SGND	-	-	Ground
	3	SGND	-	-	Ground
	4	MCV_ENBL	I	0/3.3 V DC	Coin vender enable signal
	5	FGND	-	-	Ground
	6	MCV_FEED_COUNT	O	0/3.3 V DC	Coin vender control signal
	7	MCV_EJ_COUNT	O	0/3.3 V DC	Coin vender control signal
	8	MCV_COPY_SIG	O	0/3.3 V DC	Coin vender control signal
	9	MCV_UART_TXD	O	0/3.3 V DC (pulse)	Serial communication data signal
	10	SGND	-	-	Serial communication data signal
	11	MCV_UART_RXD	I	0/3.3 V DC (pulse)	MCL: On/Off
	12	SGND	-	-	Ground
YC24	1	GND	-	-	Ground
Connected to key counter	2	DC1_SET	I	0/3.3 V DC	Key counter set signal
	3	DC1_COUNT	O	0/3.3 V DC	Key counter count signal
	4	+24V 1	O	24 V DC	24 V DC power to key card
YC25	A1	5V1	O	5 V DC	5 V DC power to key card
Connected to key card	A2	5V1	O	5 V DC	5 V DC power to key card
	A3	5V1	O	5 V DC	5 V DC power to key card
	A4	5V1	O	5 V DC	5 V DC power to key card
	A5	5V1	O	5 V DC	5 V DC power to key card
	A6	5V1	O	5 V DC	5 V DC power to key card
	A7	5V1	O	5 V DC	5 V DC power to key card
	A8	5V1	O	5 V DC	5 V DC power to key card
	A9	MK2_ENABLE	I	0/3.3 V DC	Key card enable signal
	A10	24V1	O	24 V DC	24 V DC power to key card
	B1	MK2_RKEY7	O	0/3.3 V DC	Key card control signal
	B2	MK2_RKEY6	O	0/3.3 V DC	Key card control signal
	B3	MK2_RKEY5	O	0/3.3 V DC	Key card control signal
	B4	MK2_RKEY4	O	0/3.3 V DC	Key card control signal
	B5	MK2_RKEY3	O	0/3.3 V DC	Key card control signal
	B6	MK2_RKEY2	O	0/3.3 V DC	Key card control signal
	B7	MK2_RKEY1	O	0/3.3 V DC	Key card control signal
	B8	MK2_RKEY0	O	0/3.3 V DC	Key card control signal
	B9	GND	-	-	Ground
	B10	MK2_COUNT	O	0/3.3 V DC	Key card count signal

Connector	Pin	Signal	I/O	Voltage	Description
YC26	A1	EDGE_FAN_ALM (F)	I	0/3.3 V DC	FUEFM2 alarm signal
Connected to fuser unit and fuser IH PWB	A2	GND	-	-	Ground
	A3	EDGE_FAN	O	0/24 V DC	FUEFM2: On/Off
	A4	EDGE_FAN_ALM (R)	I	0/3.3 V DC	FUEFM1 alarm signal
	A5	GND	-	-	Ground
	A6	EDGE_FAN	O	0/24 V DC	FUEFM1: On/Off
	A7	FSR_FAN_ALM	I	0/3.3 V DC	FURFM alarm signal
	A8	GND	-	-	Ground
	A9	FSR_FAN	O	0/24 V DC	FURFM: On/Off
	A10	FSR_RLS_DR_CCW	O	0/24 V DC	FURM: On/Off (CCW)
	A11	FSR_RLS_DR_CW	O	0/24 V DC	FURM: On/Off (CW)
	A12	GND	-	-	Ground
	A13	FSR_SIZE_SENS	I	0/3.3 V DC	FUES: On/Off
	A14	+5V	O	5 V DC	5 V DC power to FUES
	A15	GND	-	-	Ground
	A16	FSR_RLS_SENS	I	0/3.3 V DC	FURS: On/Off
	A17	+5V	O	5 V DC	5 V DC power to FURS
	A18	GND	-	-	Ground
	A19	FSR_BLT_PLS	I	0/3.3 V DC	FUBLS: On/Off
	A20	+5V	O	5 V DC	5 V DC power to FUBLS
	B1	PRESS_HEART_REM	-	-	Not used
	B2	IH_RXD	I	0/3.3 V DC (pulse)	Serial communication data signal
	B3	IH_TXD	O	0/3.3 V DC (pulse)	Serial communication data signal
	B4	ROTATION	O	0/3.3 V DC	FIH control signal
	B5	IH_HEAT_REM	O	0/3.3 V DC	FIH: On/Off
	B6	+3.3V2	O	3.3 V DC	5 V DC power to FIH
	B7	GND	-	-	Ground
	B8	GND	-	-	Ground
	B9	PRESS_TH	I	Analog	FTH4 detection signal
	B10	GND	-	-	Ground
	B11	EDGE_TH	I	Analog	FTH2 detection signal
	B12	GND	-	-	Ground
	B13	GUIDE_TH1	-	-	Not used
	B14	GND	-	-	Ground

Connector	Pin	Signal	I/O	Voltage	Description
YC26	B15	GUIDE_TH2	I	Analog	FTH3 detection signal
Connected to fuser unit and fuser IH PWB	B16	MAIN_TH2	I	Analog	FTH1 detection signal
	B17	MAIN_TH1	I	Analog	FTH1 detection signal
	B18	GND	-	-	Ground
	B19	+24V1	-	-	Not used
	B20	BRIDGE_FAN	-	-	Not used
YC27	1	GND	-	-	Ground
Connected to RFID PWB, toner motor K/M/C/Y and screw sensor K/M/C/Y	2	SDA	I/O	0/3.3 V DC (pulse)	EEPROM data signal
	3	SCL	I	0/3.3 V DC (pulse)	EEPROM clock signal
	4	3.3V2	O	3.3 V DC	3.3 V DC power to RFPWB
	5	24V1	O	24 V DC	24 V DC power to TM-Y
	6	TMOT_Y_DR	O	0/24 V DC	TM-Y: On/Off
	7	24V1	O	24 V DC	24 V DC power to TM-C
	8	TMOT_C_DR	O	0/24 V DC	TM-C: On/Off
	9	24V1	O	24 V DC	24 V DC power to TM-M
	10	TMOT_M_DR	O	0/24 V DC	TM-M: On/Off
	11	24V1	I	24 V DC	24 V DC power to TM-K
	12	TMOT_K_DR	O	0/24 V DC	TM-K: On/Off
	13	GND	-	-	Ground
	14	ENCODE_Y	I	0/3.3 V DC	SRS-Y: On/Off
	15	5V	O	5 V DC	24 V DC power to SRS-Y
	16	GND	-	-	Ground
	17	ENCODE_C	I	0/3.3 V DC	SRS-C: On/Off
	18	5V	O	5 V DC	24 V DC power to SRS-C
	19	GND	-	-	Ground
	20	ENCODE_M	I	0/3.3 V DC	SRS-M: On/Off
	21	5V	O	5 V DC	24 V DC power to SRS-M
	22	GND	-	-	Ground
	23	ENCODE_K	I	0/3.3 V DC	SRS-K: On/Off
	24	5V	O	5 V DC	24 V DC power to SRS-K
YC46	1	SLEEP_INT	O	0/3.3 V DC	Sleep signal
Connected to main PWB	2	G6_EG_SCLK	O	0/3.3 V DC (pulse)	Engine clock signal
	3	G6_EG_SI	O	0/3.3 V DC (pulse)	Serial communication data signal
	4	G6_EG_SDIR	O	0/3.3 V DC	Engine communication direction signal
	5	G6_EG_SBSY	O	0/3.3 V DC	Engine busy signal

Connector	Pin	Signal	I/O	Voltage	Description
YC46	6	G6_EG_SO	I	0/3.3 V DC (pulse)	Serial communication data signal
Connected to main PWB	7	G6_EG_IRN	O	0/3.3 V DC	Engine interrupt signal
	8	JS_LED	I	0/3.3 V DC	LED control signal
	9	ENG_OFF	I	0/3.3 V DC	Engine off signal
	10	HLD_ENG	O	0/3.3 V DC	Engine hold signal
	11	SLEEP_ENG	O	0/3.3 V DC	Sleep signal
	12	HSYNC_DP	O	0/3.3 V DC (pulse)	Image control signal
	13	HSYNC_DN	O	0/3.3 V DC (pulse)	Image control signal
	14	HSYNC_CP	O	0/3.3 V DC (pulse)	Image control signal
	15	HSYNC_CN	O	0/3.3 V DC (pulse)	Image control signal
	16	HSYNC_BP	O	0/3.3 V DC (pulse)	Image control signal
	17	HSYNC_BN	O	0/3.3 V DC (pulse)	Image control signal
	18	HSYNC_AP	O	0/3.3 V DC (pulse)	Image control signal
	19	HSYNC_AN	O	0/3.3 V DC (pulse)	Image control signal
	20	VSYND_DP	O	0/3.3 V DC (pulse)	Image control signal
	21	VSYND_DN	O	0/3.3 V DC (pulse)	Image control signal
	22	VSYNC_CP	O	0/3.3 V DC (pulse)	Image control signal
	23	VSYNC_CN	O	0/3.3 V DC (pulse)	Image control signal
	24	VSYNC_BP	O	0/3.3 V DC (pulse)	Image control signal
	25	VSYNC_BN	O	0/3.3 V DC (pulse)	Image control signal
	26	VSYNC_AP	O	0/3.3 V DC (pulse)	Image control signal
	27	VSYNC_AN	O	0/3.3 V DC (pulse)	Image control signal
	28	GND	-	-	Ground
	29	SAR_TCLK_P	O	0/3.3 V DC (pulse)	Clock signal
	30	SAR_TCLK_N	O	0/3.3 V DC (pulse)	Clock signal
	31	GND	-	-	Ground
	32	SAR_CH3_P	O	0/3.3 V DC (pulse)	Image control signal
	33	SAR_CH3_N	O	0/3.3 V DC (pulse)	Image control signal
	34	GND	-	-	Ground
	35	SAR_CH2_P	O	0/3.3 V DC (pulse)	Image control signal
	36	SAR_CH2_N	O	0/3.3 V DC (pulse)	Image control signal
	37	GND	-	-	Ground
	38	SAR_CH1_P	O	0/3.3 V DC (pulse)	Image control signal
	39	SAR_CH1_N	O	0/3.3 V DC (pulse)	Image control signal
	40	GND	-	-	Ground
	41	GND	-	-	Ground

Connector	Pin	Signal	I/O	Voltage	Description
YC47	1	NC	-	-	Not used
Connected to fiery relay PWB	2	NC	-	-	Not used
	3	NC	-	-	Not used
	4	NC	-	-	Not used
	5	NC	-	-	Not used
	6	NC	-	-	Not used
	7	NC	-	-	Not used
	8	NC	-	-	Not used
	9	NC	-	-	Not used
	10	NC	-	-	Not used
	11	NC	-	-	Not used
	12	GND	-	-	Ground
	13	CH1_N	O	0/3.3 V DC (pulse)	Image control signal
	14	CH1_P	O	0/3.3 V DC (pulse)	Image control signal
	15	GND	-	-	Ground
	16	CH2_N	O	0/3.3 V DC (pulse)	Image control signal
	17	CH2_P	O	0/3.3 V DC (pulse)	Image control signal
	18	GND	-	-	Ground
	19	CH3_N	O	0/3.3 V DC (pulse)	Image control signal
	20	CH3_P	O	0/3.3 V DC (pulse)	Image control signal
	21	GND	-	-	Ground
	22	VCLK_N	O	0/3.3 V DC (pulse)	Clock signal
	23	VCLK_P	O	0/3.3 V DC (pulse)	Clock signal
	24	GND	-	-	Ground
	25	VSYNC_DP	O	0/3.3 V DC (pulse)	Image control signal
	26	VSYNC_DN	O	0/3.3 V DC (pulse)	Image control signal
	27	VSYNC_CP	O	0/3.3 V DC (pulse)	Image control signal
	28	VSYNC_CN	O	0/3.3 V DC (pulse)	Image control signal
	29	VSYNC_BP	O	0/3.3 V DC (pulse)	Image control signal
	30	VSYNC_BN	O	0/3.3 V DC (pulse)	Image control signal
	31	VSYNC_AP	O	0/3.3 V DC (pulse)	Image control signal
	32	VSYNC_AN	O	0/3.3 V DC (pulse)	Image control signal
	33	HSYNC_DP	O	0/3.3 V DC (pulse)	Image control signal
	34	HSYNC_DN	O	0/3.3 V DC (pulse)	Image control signal
	35	HSYNC_CP	O	0/3.3 V DC (pulse)	Image control signal
	36	HSYNC_CN	O	0/3.3 V DC (pulse)	Image control signal
	37	HSYNC_BP	O	0/3.3 V DC (pulse)	Image control signal

Connector	Pin	Signal	I/O	Voltage	Description
YC47	38	HSYNC_BN	O	0/3.3 V DC (pulse)	Image control signal
Connected to fiery relay PWB	39	HSYNC_AP	O	0/3.3 V DC (pulse)	Image control signal
	40	HSYNC_AN	O	0/3.3 V DC (pulse)	Image control signal
	41	GND	-	-	Ground

2-3-3 Power source PWB

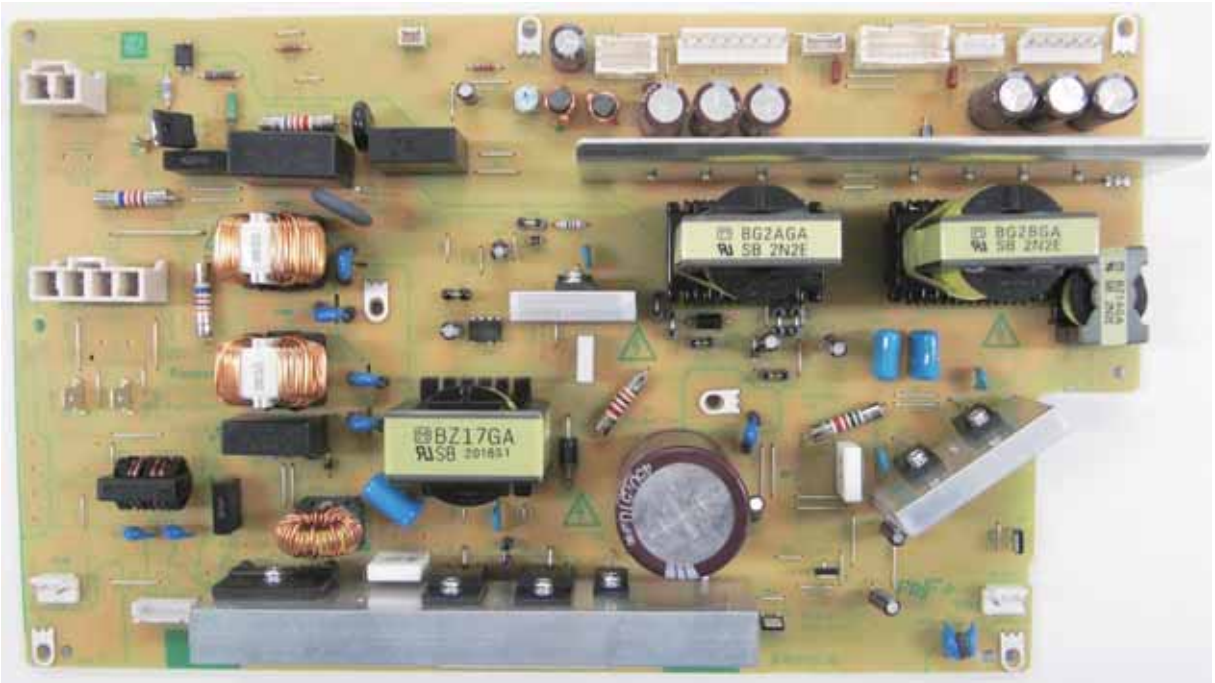

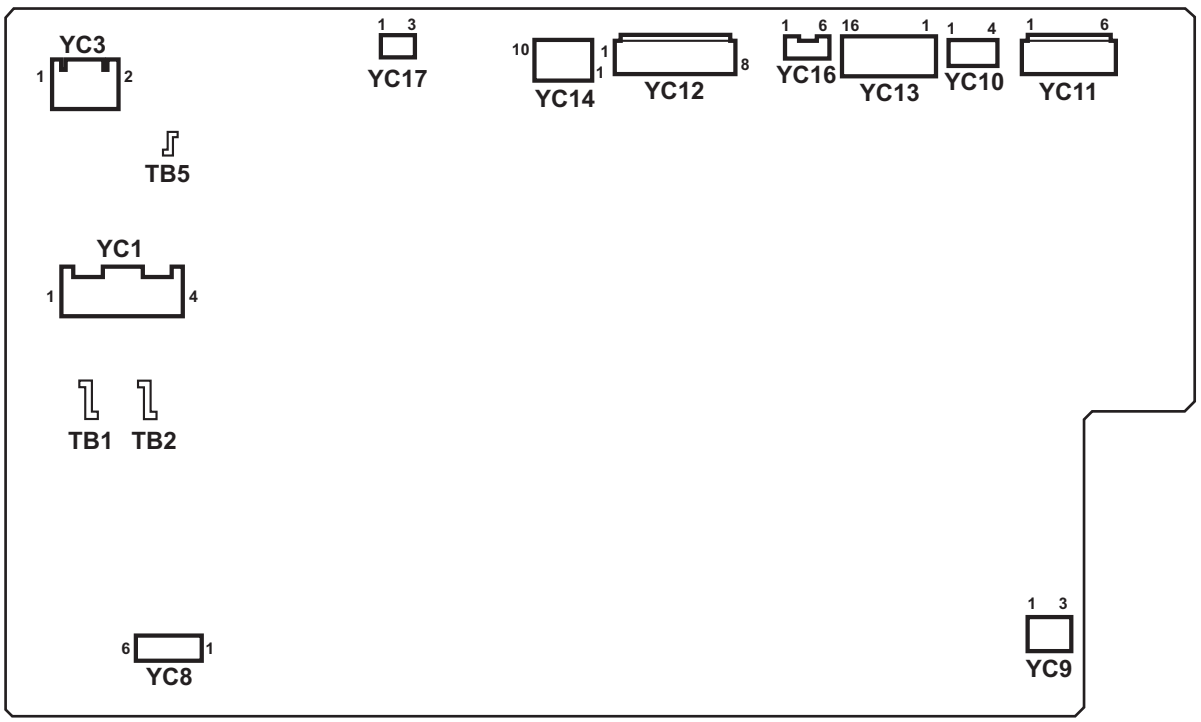

Figure 2-3-3 Power source PWB silk-screen diagram

Connector	Pin	Signal	I/O	Voltage	Description
TB	1	LIVE	I	120 V AC 220-240 V AC	AC power input
Connected to AC inlet and main power switch	2	NEUTRAL	I	120 V AC 220-240 V AC	AC power input
	5	DH_LIVE	I	120 V AC 220-240 V AC	AC power input
YC1	1	LIVE_IN	I	120 V AC 220-240 V AC	AC power input to MSW
Connected to main power switch	2	LIVE_OUT	O	120 V AC 220-240 V AC	AC power output from MSW
	3	NEUTRAL_OUT	O	120 V AC 220-240 V AC	AC power output to MSW
	4	NEUTRAL_IN	I	120 V AC 220-240 V AC	AC power input from MSW
YC3	1	LIVE	O	120 V AC 220-240 V AC	AC power output to FIHPWB
Connected to fuser IH PWB	2	NEUTRAL	O	120 V AC 220-240 V AC	AC power output to FIHPWB
YC8	1	DH_LIVE	O	120 V AC 220-240 V AC	AC power output to CH
Connected to cassette heater	2	NC	-	-	Not used
	3	NC	-	-	Not used
	4	NC	-	-	Not used
	5	NC	-	-	Not used
	6	DH_NEUTRAL	O	120 V AC 220-240 V AC	AC power output to CH
YC9	1	DH_LIVE	O	120 V AC 220-240 V AC	AC power output to PFCH
Connected to paper feeder/ large capac-ity feeder	3	DH_NEUTRAL	O	120 V AC 220-240 V AC	AC power output to PFCH
YC10	1	+24V1	O	24 V DC	24 V DC power to LSURPWB
Connected to LSU relay PWB	2	+24V1	O	24 V DC	24 V DC power to LSURPWB
	3	GND	-	-	Ground
	4	GND	-	-	Ground

Connector	Pin	Signal	I/O	Voltage	Description
YC11	1	24V1	O	24 V DC	24 V DC power to MCPWB
Connected to motor control PWB	2	24V1	O	24 V DC	24 V DC power to MCPWB
	3	24V1	O	24 V DC	24 V DC power to MCPWB
	4	GND	-	-	Ground
	5	GND	-	-	Ground
	6	GND	-	-	Ground
YC12	1	24V1	O	24 V DC	24 V DC power to FPWB1
Connected to feed PWB 1	2	24V1	O	24 V DC	24 V DC power to FPWB1
	3	24V1	O	24 V DC	24 V DC power to FPWB1
	4	5V1	O	5 V DC	5 V DC power to FPWB1
	5	GND	-	-	Ground
	6	GND	-	-	Ground
	7	GND	-	-	Ground
	8	GND	-	-	Ground
YC13	1	24V1	O	24 V DC	24 V DC power to paper feeder/large capacity feeder
Connected to paper feeder/ large capacity feeder, 1000-sheet/ 4000-sheet finisher and ISC PWB	2	24V1	O	24 V DC	24 V DC power to paper feeder/large capacity feeder
	3	24V1	O	24 V DC	24 V DC power to 1000-sheet/4000-sheet finisher
	4	24V1	O	24 V DC	24 V DC power to 1000-sheet/4000-sheet finisher
	5	24V1	O	24 V DC	24 V DC power to ISCPWB
	6	24V1	O	24 V DC	24 V DC power to ISCPWB
	7	24V1	-	-	Not used
	8	24V1	-	-	Not used
	9	GND	-	-	Ground
	10	GND	-	-	Ground
	11	GND	-	-	Ground
	12	GND	-	-	Ground
	13	GND	-	-	Ground
	14	GND	-	-	Ground
	15	GND	-	-	Not used
	16	GND	-	-	Not used

Connector	Pin	Signal	I/O	Voltage	Description
YC14	1	5V1	O	5 V DC	5V DC power to MPWB
Connected to main PWB	2	GND	-	-	Ground
	3	5V1	O	5 V DC	5V DC power to MPWB
	4	GND	-	-	Ground
	5	5V1	O	5 V DC	5V DC power to MPWB
	6	GND	-	-	Ground
	7	5V1	O	5 V DC	5V DC power to MPWB
	8	GND	-	-	Ground
	9	5V1	O	5 V DC	5V DC power to MPWB
	10	GND	-	-	Ground
YC16	1	24V1	O	24 V DC	24 V DC power to HVPWB1
Connected to high voltage PWB 1	2	24V1	O	24 V DC	24 V DC power to HVPWB1
	3	24V1	O	24 V DC	24 V DC power to HVPWB1
	4	GND	-	-	Ground
	5	GND	-	-	Ground
	6	GND	-	-	Ground
YC17	1	POWER_OFF_24V1	I	0/3.3 V DC	Sleep mode signal: On/Off
Connected to feed PWB 1	2	DRUM_HEAT_REM	I	0/3.3 V DC	FH: On/Off
	3	GND	-	-	Ground

2-3-4 IH PWB

(1) 120V model

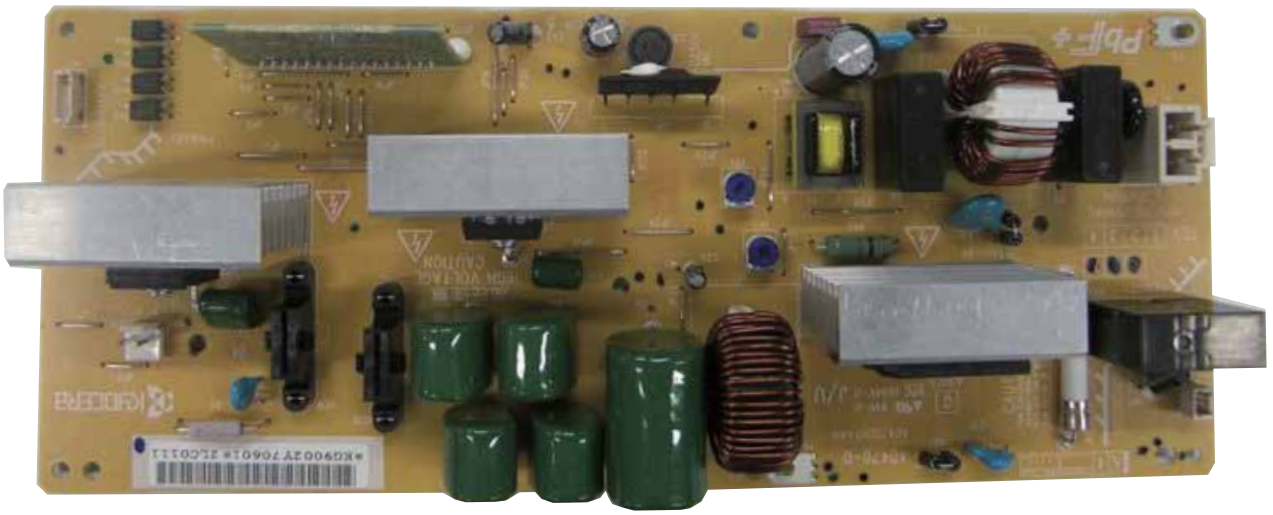

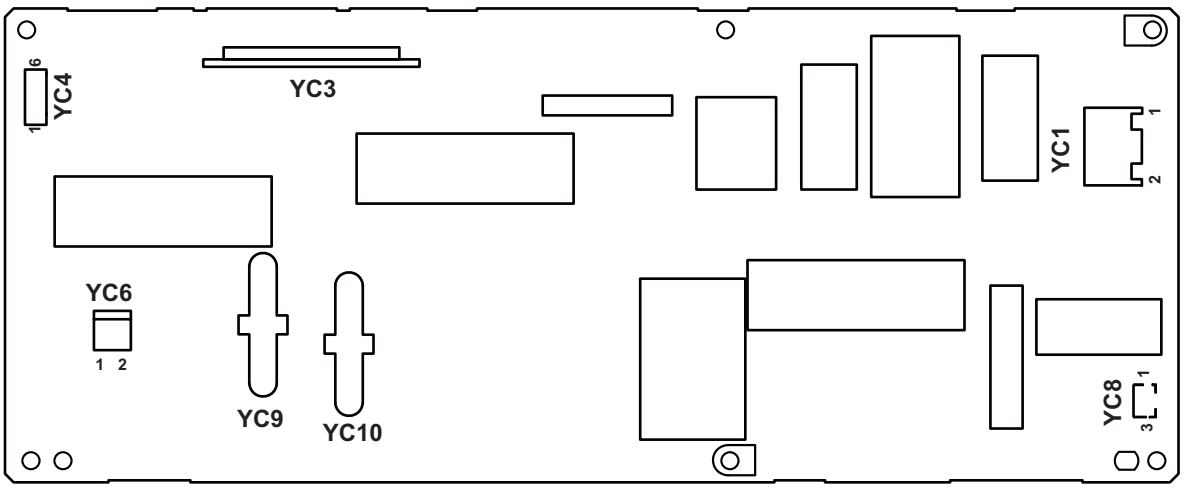

Figure 2-3-4 IH PWB (120V) silk-screen diagram

Connector	Pin	Signal	I/O	Voltage	Description
YC1	1	AC_LIVE	I	120 V AC	120V AC power input
Connected to Inlet2	2	AC_NEUTRAL	I	120 V AC	120V AC power input
YC4	1	SGAND	-	-	Ground
Connected to engine PWB	2	Vcc	I	3.3 V DC	3.3 V DC power from EPWB
	3	IH_REM	I	0/3.3 V DC	FIH: On/Off
	4	ROTATION	I	0/3.3 V DC (pulse)	FIH control signal
	5	RXD	I	0/3.3 V DC (pulse)	Serial communication data signal
	6	TXD	O	0/3.3 V DC (pulse)	Serial communication data signal
YC5	1	LIVE_OUT	O	120 V AC 220-240 V AC	AC power output to FTS2
Connected to fuser heater and fuser-thermostat 2	2		-	-	Not used
	3	NEUTRAL_OUT	O	120 V AC 220-240 V AC	AC power output to FH
YC6	1	+15V1	O	15 V DC	15V DC power to FTS1
Connected to fuser thermo-stat 1	2	+15V2	I	15 V DC	15V DC power from FTS1
YC8	1	FSR_RELAY_24V	I	0/3.3 V DC	Fuser relay signal
Connected to feed PWB 1	2	+24V1	I	24 V DC	24 V DC power from feed PWB 1
	3	FSR_RELAY	I	0/3.3 V DC	Fuser relay signal
	4	GND	-	-	Ground
	5	GND	-	-	Ground
	6	ZEROC	-	-	Not used
	7	+24V2	I	24 V DC	24 V DC power from feed PWB 1
	8	PRESS_REM	I	0/3.3 V DC	Fuser heater remote signal
YC9	1	VS	O	70 V to 185 V AC	Resonant circuit output to the IH coil
Connected to Fuser IH					
YC10	1	COIL_COM	O	70 V to 185 V AC	Resonant circuit output to the IH coil
Connected to Fuser IH					

(2) 220-240V model

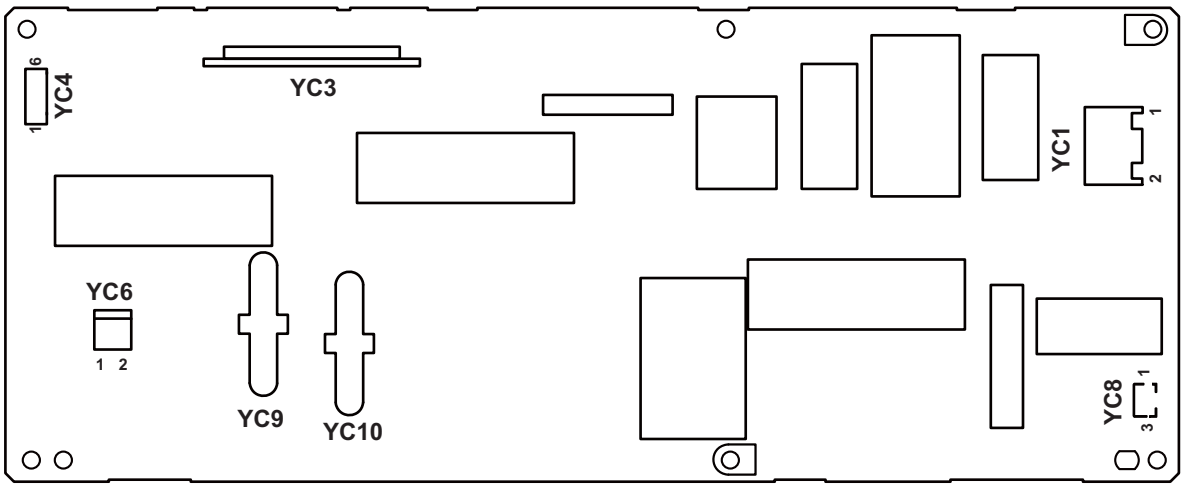

Figure 2-3-5 IH PWB (220-240V) silk-screen diagram

Connector	Pin	Signal	I/O	Voltage	Description
YC1	1	LIVE	I	220-240 V AC	220-240 V AC power input
Connected to Power source PWB	2	NEUTRAL	I	220-240 V AC	220-240 V AC power input
YC4	1	SGAND	-	-	Ground
Connected to engine PWB	2	Vcc	I	3.3 V DC	3.3 V DC power from EPWB
	3	IH_REM	I	0/3.3 V DC	FIH: On/Off
	4	ROTATION	I	0/3.3 V DC (pulse)	FIH control signal
	5	RXD	I	0/3.3 V DC (pulse)	Serial communication data signal
	6	TXD	O	0/3.3 V DC (pulse)	Serial communication data signal
YC5	1	LIVE_OUT	O	120 V AC 220-240 V AC	AC power output to FTS2
Connected to fuser heater and fuser-thermostat 2	2		-	-	Not used
	3	NEUTRAL_OUT	O	120 V AC 220-240 V AC	AC power output to FH
YC6	1	+15V1	O	15 V DC	15V DC power to FTS1
Connected to fuser thermo-stat 1	2	+15V2	I	15 V DC	15V DC power from FTS1
YC8	1	FSR_RELAY_24V	I	0/3.3 V DC	Fuser relay signal
Connected to feed PWB 1	2	+24V1	I	24 V DC	24 V DC power from feed PWB 1
	3	FSR_RELAY	I	0/3.3 V DC	Fuser relay signal
	4	GND	-	-	Ground
	5	GND	-	-	Ground
	6	ZEROC	-	-	Not used
	7	+24V2	I	24 V DC	24 V DC power from feed PWB 1
	8	PRESS_REM	I	0/3.3 V DC	Fuser heater remote signal
YC9	1	VS	O	138 V to 370 V AC	AC power to FIH
Connected to Fuser IH					
YC10	1	COIL_COM	O	138 V to 370 V AC	AC power to FIH
Connected to Fuser IH					

2-3-5 ISC PWB

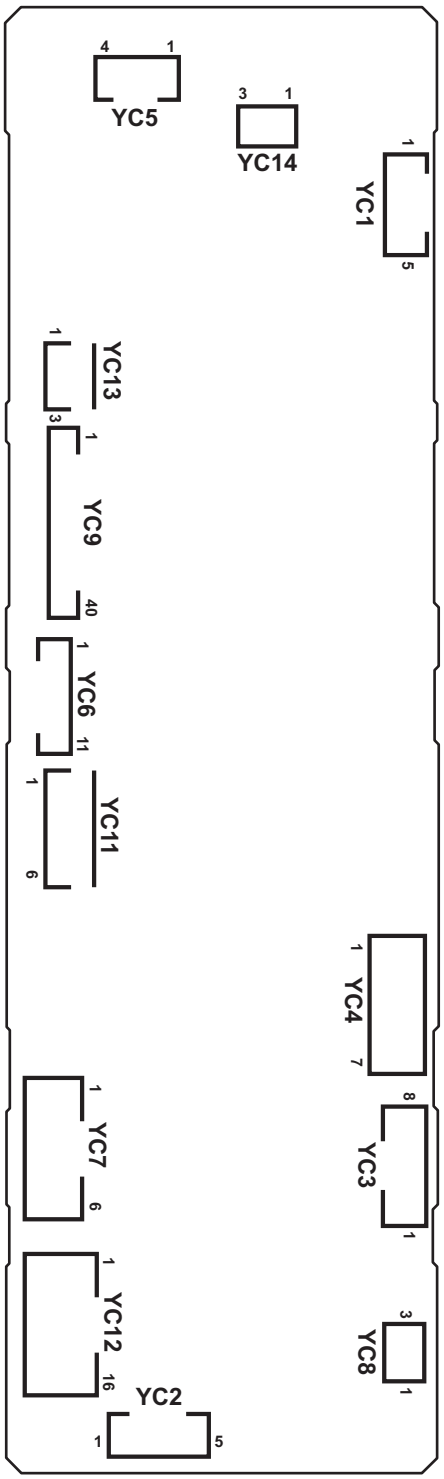

Figure 2-3-6 ISC PWB silk-screen diagram

Connector	Pin	Signal	I/O	Voltage	Description
YC3	1	SC_CLK	I	0/3.3 V DC (pulse)	Scanner clock signal
Connected to main PWB	2	SC_SO	O	0/3.3 V DC (pulse)	Serial communication data signal
	3	SC_SI	I	0/3.3 V DC (pulse)	Serial communication data signal
	4	SC_BSY	I	0/3.3 V DC	Scanner busy signal
	5	SC_HLDN	I	0/3.3 V DC	Scanner hold signal
	6	SC_DIR	I	0/3.3 V DC	Scanner communication direction signal
	7	SC_IRN	I	0/3.3 V DC	Scanner interrupt signal
	8	GND(SPARE)	-	-	Ground
YC4	1	GND	-	-	Ground
Connected to main PWB	2	HTPDN	O	0/3.3 V DC	Control signal
	3	LOCKN	O	0/3.3 V DC	Lock signal
	4	GND	-	-	Ground
	5	TX0N	O	0/3.3 V DC (pulse)	Transmission data signal
	6	TX0P	O	0/3.3 V DC (pulse)	Transmission data signal
	7	GND	-	-	Ground
YC5	1	SMOT_AP	O	0/24 V DC (pulse)	SM drive control signal
Connected to scanner motor	2	SMOT_BP	O	0/24 V DC (pulse)	SM drive control signal
	3	SMOT_AN	O	0/24 V DC (pulse)	SM drive control signal
	4	SMOT_BN	O	0/24 V DC (pulse)	SM drive control signal
YC6	1	+5V	O	5 V DC	5 V DC power to LLPWB
Connected to LED lamp PWB	2	FAIL	I	0/3.3 V DC	Error signal
	3	SDA	I/O	0/3.3 V DC	Data signal
	4	SCL	O	0/3.3 V DC (pulse)	Clock signal
	5	VSET	O	Analog	Analog voltage
	6	SGND	-	-	Ground
	7	PGND	-	-	Ground
	8	PWM	O	0/3.3 V DC	PWM signal
	9	POW	O	0/3.3 V DC	LED driver: On/Off
	10	+24V1	O	24 V DC	24 V DC power to LLPWB
	11	+24V1	O	24 V DC	24 V DC power to LLPWB

Connector	Pin	Signal	I/O	Voltage	Description
YC7	1	+24V1	I	24 V DC	24 V DC power from PSPWB
Connected to power source PWB	2	GND	-	-	Ground
	3	GND	-	-	Ground
	4	GND	-	-	Ground
	5	+24V2	I	24 V DC	24 V DC power from PSPWB
	6	+24V2	I	24 V DC	24 V DC power from PSPWB
YC8	1	+3.3V	O	3.3 V DC	3.3 V DC power to HPS
Connected to home position sensor	2	GND	-	-	Ground
	3	HP_SW	I	0/3.3 V DC	HPS: On/Off
YC9	1	GND	-	-	Ground
Connected to CCD PWB	2	CCDCLK1	O	0/3.3 V DC (pulse)	Clock signal
	3	GND	-	-	Ground
	4	CCDCLK2	O	0/3.3 V DC (pulse)	Clock signal
	5	GND	-	-	Ground
	6	CP	O	0/3.3 V DC	Clamp signal
	7	GND	-	-	Ground
	8	RS	O	0/3.3 V DC	Reset signal
	9	VSG	O	0/3.3 V DC	Control signal
	10	TG	O	0/3.3 V DC	Control signal
	11	SH	O	0/3.3 V DC	Shift gate signal
	12	AFE_SI	I	0/3.3 V DC (pulse)	Serial communication data signal
	13	AFE_EN	O	0/3.3 V DC (pulse)	Enable signal
	14	AFE_SO	O	0/3.3 V DC (pulse)	Serial communication data signal
	15	AFE_CLK	O	0/3.3 V DC (pulse)	Clock signal
	16	GND	-	-	Ground
	17	DIS_CIS_1N	I	0/3.3 V DC (pulse)	Image data signal
	18	DIS_CIS_1P	I	0/3.3 V DC (pulse)	Image data signal
	19	GND	-	-	Ground
	20	DIS_CIS_2N	I	0/3.3 V DC (pulse)	Image data signal
	21	DIS_CIS_2P	I	0/3.3 V DC (pulse)	Image data signal
	22	GND	-	-	Ground
	23	DIS_CIS_3N	I	0/3.3 V DC (pulse)	Image data signal
	24	DIS_CIS_3P	I	0/3.3 V DC (pulse)	Image data signal
	25	GND	-	-	Ground
	26	DIS_CIS_4N	I	0/3.3 V DC (pulse)	Image data signal
	27	DIS_CIS_4P	I	0/3.3 V DC (pulse)	Image data signal

Connector	Pin	Signal	I/O	Voltage	Description
YC9	28	GND	-	-	Ground
Connected to CCD PWB	29	DIS_CIS_5N	I	0/3.3 V DC (pulse)	Image data signal
	30	DIS_CIS_5P	I	0/3.3 V DC (pulse)	Image data signal
	31	GND	-	-	Ground
	32	DIS_CISCKN	O	0/3.3 V DC (pulse)	Clock signal
	33	DIS_CISCKP	O	0/3.3 V DC (pulse)	Clock signal
	34	GND	-	-	Ground
	35	CCDSEL	O	0/3.3 V DC	Select signal
	36	GND	-	-	Ground
	37	AFE_MCLK	O	0/3.3 V DC (pulse)	Clock signal
	38	GND(AFE_SHD)	-	-	Ground
	39	CLPIN	O	0/3.3 V DC	Clamp signal
	40	GND(AFE_SHP)	-	-	Ground
YC11	1	+5.1V	O	5 V DC	5 V DC power to CCDPWB
Connected to CCD PWB	2	GND	-	-	Ground
	3	+10V	O	DC10V	10 V DC power to CCDPWB
	4	GND	-	-	Ground
	5	+3.3V	O	3.3 V DC	3.3 V DC power to CCDPWB
	6	GND	-	-	Ground
YC12	1	GND(SPARE)	-	-	Ground
Connected to DP main PWB	2	DP_TMG	I	0/3.3 V DC	DPTS: On/Off
	3	DP_RDY	I	0/3.3 V DC	Ready signal
	4	DP_SEL	O	0/3.3 V DC	Select signal
	5	DP_CLK	O	0/3.3 V DC (pulse)	Clock signal
	6	DP_SO	O	0/3.3 V DC (pulse)	Serial communication data signal
	7	DP_SI	I	0/3.3 V DC (pulse)	Serial communication data signal
	8	DP_OPEN	I	0/3.3 V DC	DPOCSW: On/Off
	9	Reserve	-	-	Not used
	10	GND	-	-	Ground
	11	GND	-	-	Ground
	12	GND	-	-	Ground
	13	Reserve	-	-	Not used
	14	+24V2	O	24 V DC	24 V DC power to DPMPWB
	15	+24V2	O	24 V DC	24 V DC power to DPMPWB
	16	+24V2	O	24 V DC	24 V DC power to DPMPWB

Connector	Pin	Signal	I/O	Voltage	Description
YC13	1	GND	-	-	Ground
Connected to original size sensor	2	ORG_SW	I	0/3.3 V DC	OSS: On/Off
	3	+5.1V	O	5 V DC	5 V DC power to OSS
YC14	1	+3.3V	O	3.3 V DC	3.3 V DC power to ODSW
Connected to original detection switch	2	GND	-	-	Ground
	3	CO_SW	I	0/3.3 V DC	ODSW: On/Off

2-3-6 Operation PWB 1

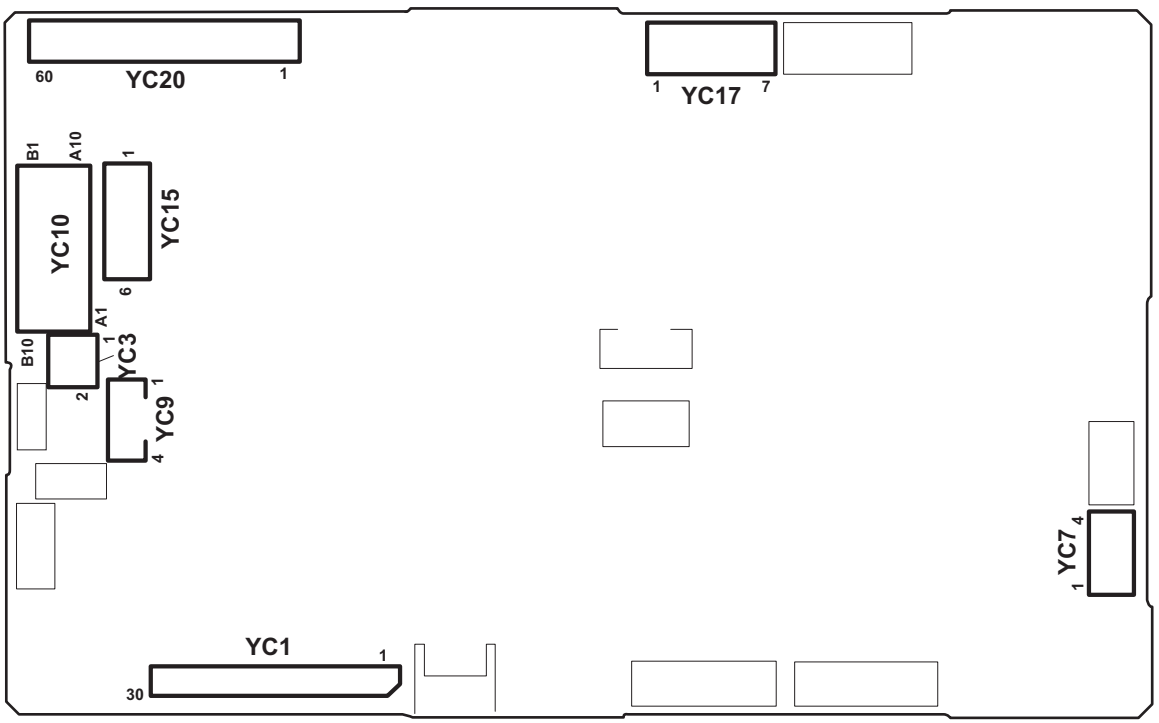

Figure 2-3-7 Operation PWB 1 silk-screen diagram

Connector	Pin	Signal	I/O	Voltage	Description
YC1	1	5V0	O	5 V DC	5 V DC power to OPWB2
Connected to operation PWB2	2	NC	-	-	Not used
	3	INT_POWERKEY_N	I	0/3.3 V DC	Power key: On/Off
	4	GND	-	-	Ground
	5	KEY6	I	0/3.3 V DC (pulse)	Operation panel key scan return signal 6
	6	NC	-	-	Not used
	7	LED3	O	0/3.3 V DC (pulse)	Operation panel LED display drive signal 3
	8	NC	-	-	Not used
	9	KEY5	I	0/3.3 V DC (pulse)	Operation panel key scan return signal 5
	10	KEY4	I	0/3.3 V DC (pulse)	Operation panel key scan return signal 4
	11	SCAN4	O	0/3.3 V DC (pulse)	Scan signal 4
	12	SCAN2	O	0/3.3 V DC (pulse)	Scan signal 2
	13	GND	-	-	Ground
	14	SCAN3	O	0/3.3 V DC (pulse)	Scan signal 3
	15	SCAN1	O	0/3.3 V DC (pulse)	Scan signal 1
	16	NC	-	-	Not used
	17	LED0	O	0/3.3 V DC (pulse)	Operation panel LED display drive signal 0
	18	LED1	O	0/3.3 V DC (pulse)	Operation panel LED display drive signal 1
	19	LED2	O	0/3.3 V DC (pulse)	Operation panel LED display drive signal 2
	20	NC	-	-	Not used
	21	KEY0	I	0/3.3 V DC (pulse)	Operation panel key scan return signal 0
	22	KEY1	I	0/3.3 V DC (pulse)	Operation panel key scan return signal 1
	23	KEY2	I	0/3.3 V DC (pulse)	Operation panel key scan return signal 2
	24	SCAN0	O	0/3.3 V DC (pulse)	Scan signal 0
	25	KEY3	I	0/3.3 V DC (pulse)	Operation panel key scan return signal 3
	26	GND	-	-	Ground
	27	ATTENTION	O	0/3.3 V DC	Attention LED control signal
	28	MEMORY	O	0/3.3 V DC	Memory LED control signal

Connector	Pin	Signal	I/O	Voltage	Description
YC1	29	PROCESSING	O	0/3.3 V DC	Processing LED control signal
Connected to operation PWB2	30	JOB_LED	O	0/3.3 V DC	JOBLED control signal
YC3	1	VO2	O	Analog	Speaker sound signal (+)
Connected to speaker	2	VO1	O	Analog	Speaker sound signal (-)
YC7	1	BOTTOM Y+	I	Analog	Touch panel Y+ position signal
Connected to touch panel	2	LEFT X-	I	Analog	Touch panel X- position signal
	3	TOP Y-	I	Analog	Touch panel Y- position signal
	4	RIGHT X+	I	Analog	Touch panel X+ position signal
YC9	1	LED_A	O	0/3.3 V DC	LED control signal
Connected to LCD	2	NC	-	-	Not used
	3	LED_C	I	0/3.3 V DC	LED control signal
	4	NC	-	-	Not used
YC10	A1	LIGHTOFF_POWERON	I	0/3.3 V DC	Sleep return signal
Connected to main PWB	A2	GND	-	-	Ground
	A3	INT_POWERKEY	O	0/3.3 V DC	Power key: On/Off
	A4	AUDIO	I	Analog	Audio output signal
	A5	LED_PROCESSING	I	0/3.3 V DC	Processing LED control signal
	A6	LED_ATTENTION	I	0/3.3 V DC	Attention LED control signal
	A7	LED_MEMORY	I	0/3.3 V DC	Memory LED control signal
	A8	BEEP_POWERON	I	0/3.3 V DC	Sleep return signal
	A9	PANEL RESET	I	0/3.3 V DC	Reset signal
	A10	GND	-	-	Ground
	B1	P2C_SDAT	O	0/3.3 V DC (pulse)	Serial communication data signal
	B2	C2P_SDAT	I	0/3.3 V DC (pulse)	Serial communication data signal
	B3	P2C_SDIR	O	0/3.3 V DC	Panel communication direction signal
	B4	P2C_SBSY	O	0/3.3 V DC	Panel busy signal
	B5	C2P_SCK	I	0/3.3 V DC (pulse)	Panel clock signal
	B6	ANY_KEY	O	0/3.3 V DC	ANY KEY return signal
	B7	HUMAN_SENS_NEAR	-	-	Not used
	B8	5V0	I	5 V DC	5 V DC power from MPWB
	B9	JOB_LED	I	0/3.3 V DC	JOB LED control signal

Connector	Pin	Signal	I/O	Voltage	Description
YC10	B10	HUMAN_SENS_FAR	-	-	Not used
Connected to main PWB					
YC15	1	+5V6	I	5 V DC	5 V DC power from MPWB
Connected to main PWB	2	+5V6	I	5 V DC	5 V DC power from MPWB
	3	+5V6	I	5 V DC	5 V DC power from MPWB
	4	GND	-	-	Ground
	5	GND	-	-	Ground
	6	GND	-	-	Ground
YC17	1	GND	-	-	Ground
Connected to main PWB	2	LCD_OFF	I	0/3.3 V DC	Control signal
	3	LOCKN	I	0/3.3 V DC	Lock signal
	4	GND	-	-	Ground
	5	TX0N	I	0/3.3 V DC (pulse)	Transmission data signal
	6	TX0P	I	0/3.3 V DC (pulse)	Transmission data signal
	7	GND	-	-	Ground
YC20	1	VH	O	Analog	LCD control signal
Connected to LCD	2	3.3V2	O	0/3.3 V DC	3.3 V DC power to LCD
	3	3.3V2	O	0/3.3 V DC	3.3 V DC power to LCD
	4	CKG	O	0/3.3 V DC (pulse)	LCD clock signal
	5	STVD	I/O	0/3.3 V DC	LCD control signal
	6	GND	-	-	Ground
	7	GND	-	-	Ground
	8	VM	O	Analog	LCD control signal
	9	REV	O	0/3.3 V DC	LCD control signal
	10	UD	O	0/3.3 V DC	LCD control signal
	11	STVU	I/O	0/3.3 V DC	LCD control signal
	12	VLS	O	Analog	LCD control signal
	13	VLS	O	Analog	LCD control signal
	14	GND	-	-	Ground
	15	GND	-	-	Ground
	16	DIO2	I/O	0/3.3 V DC	LCD control signal
	17	DIO1	I/O	0/3.3 V DC	LCD control signal
	18	SHL	O	0/3.3 V DC	LCD control signal
	19	LD	O	0/3.3 V DC	LCD control signal

Connector	Pin	Signal	I/O	Voltage	Description
YC20	20	GND	-	-	Ground
Connected to LCD	21	CKS	O	0/3.3 V DC (pulse)	LCD clock signal
	22	GND	-	-	Ground
	23	V1	O	0/3.3 V DC	LCD control signal
	24	V2	O	0/3.3 V DC	LCD control signal
	25	V3	O	0/3.3 V DC	LCD control signal
	26	V4	O	0/3.3 V DC	LCD control signal
	27	V5	O	0/3.3 V DC	LCD control signal
	28	V6	O	0/3.3 V DC	LCD control signal
	29	V7	O	0/3.3 V DC	LCD control signal
	30	V8	O	0/3.3 V DC	LCD control signal
	31	V9	O	0/3.3 V DC	LCD control signal
	32	V10	O	0/3.3 V DC	LCD control signal
	33	V11	O	0/3.3 V DC	LCD control signal
	34	V12	O	0/3.3 V DC	LCD control signal
	35	V13	O	0/3.3 V DC	LCD control signal
	36	V14	O	0/3.3 V DC	LCD control signal
	37	GND	-	-	Ground
	38	RO0	O	0/3.3 V DC	LCD control signal
	39	RO1	O	0/3.3 V DC	LCD control signal
	40	RO2	O	0/3.3 V DC	LCD control signal
	41	RO3	O	0/3.3 V DC	LCD control signal
	42	RO4	O	0/3.3 V DC	LCD control signal
	43	RO5	O	0/3.3 V DC	LCD control signal
	44	GO0	O	0/3.3 V DC	LCD control signal
	45	GO1	O	0/3.3 V DC	LCD control signal
	46	GO2	O	0/3.3 V DC	LCD control signal
	47	GO3	O	0/3.3 V DC	LCD control signal
	48	GO4	O	0/3.3 V DC	LCD control signal
	49	GO5	O	0/3.3 V DC	LCD control signal
	50	BO0	O	0/3.3 V DC	LCD control signal
	51	BO1	O	0/3.3 V DC	LCD control signal
	52	BO2	O	0/3.3 V DC	LCD control signal
	53	BO3	O	0/3.3 V DC	LCD control signal
	54	BO4	O	0/3.3 V DC	LCD control signal
	55	BO5	O	0/3.3 V DC	LCD control signal
	56	POL	O	0/3.3 V DC	LCD control signal

Connector	Pin	Signal	I/O	Voltage	Description
YC20	57	OE	O	0/3.3 V DC	LCD control signal
Connected to LCD	58	VCOM	O	Analog	LCD control signal
	59	VCOM	O	Analog	LCD control signal
	60	VCOM	O	Analog	LCD control signal

2-3-7 Front PWB

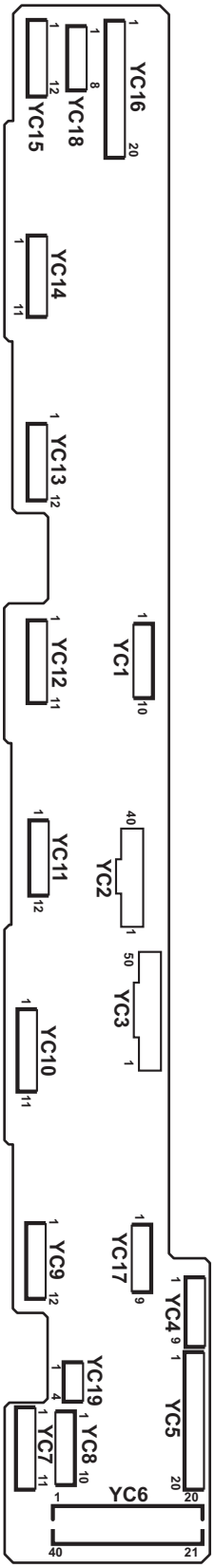

Figure 2-3-8 Front PWB silk-screen diagram

Connector	Pin	Signal	I/O	Voltage	Description
YC1	1	+3.3V1	I	3.3 V DC	3.3 V DC power from EPWB
Connected to engine PWB	2	+3.3V2	I	3.3 V DC	3.3 V DC power from EPWB
	3	+5V	I	5 V DC	5 V DC power from EPWB
	4	+24V	I	24 V DC	24 V DC power from EPWB
	5	+24V	I	24 V DC	24 V DC power from EPWB
	6	GND	-	-	Ground
	7	GND	-	-	Ground
	8	GND	-	-	Ground
	9	GND	-	-	Ground
	10	GND	-	-	Ground
YC2	1	GND	-	-	Ground
Connected to engine PWB	2	ECO_SENS	O	0/3.3 V DC	DRM-K control signal
	3	ERS_Bk_REM	I	0/24 V DC	CL-K: On/Off
	4	TPD_ Bk_1	O	Analog	TS-K detection signal
	5	DLP_VCONT_Bk_1	I	0/3.3 V DC	TS-K control signal
	6	TPD_TEMP_Bk	O	Analog	Developer thermistor K detection signal
	7	GND	-	-	Ground
	8	DRM_INDEX_M	O	0/3.3 V DC	DRM-M control signal
	9	ERS_ M_REM	I	0/24 V DC	CL-M: On/Off
	10	TPD_M_1	O	Analog	DEVPWB-M detection signal
	11	DLP_VCONT_M_1	I	0/3.3 V DC	DEVPWB-M control signal
	12	TPD_TEMP_M	O	Analog	Developer thermistor M detection signal
	13	GND	-	-	Ground
	14	DRM_INDEX_C	O	0/3.3 V DC	DRM-C control signal
	15	ERS_C_REM	I	0/24 V DC	CL-C: On/Off
	16	TPD_C_1	O	Analog	DEVPWB-C detection signal
	17	DLP_VCONT_C_1	I	0/3.3 V DC	DEVPWB-C control signal
	18	TPD_TEMP_C	O	Analog	Developer thermistor C detection signal
	19	GND	-	-	Ground
	20	TN_CLK	I	0/3.3 V DC (pulse)	Clock signal
	21	GND	-	-	Ground
	22	EEP_SCL1	I	0/3.3 V DC (pulse)	EEPROM clock signal

Connector	Pin	Signal	I/O	Voltage	Description
YC2	23	GND	-	-	Ground
Connected to engine PWB	24	EEP_SDA1	I/O	0/3.3 V DC (pulse)	EEPROM data signal
	25	GND	-	-	Ground
	26	TPD_Y_1	O	Analog	DEVPWB-Y detection signal
	27	DLP_VCONT_Y_1	I	0/3.3 V DC	DEVPWB-Y control signal
	28	TPD_TEMP_Y	O	Analog	Developer thermistor Y detection signal
	29	ERS_Y_REM	I	0/24 V DC	CL-Y: On/Off
	30	DRM_INDEX_ Y	O	0/3.3 V DC	DRM-Y control signal
	31	FRONT_OPEN	O	0/3.3 V DC	FRCSW: On/Off
	32	GND	-	-	Ground
	33	I2C_SCL	I	0/3.3 V DC (pulse)	EEPROM clock signal
	34	GND	-	-	Ground
	35	I2C_SDA	I/O	0/3.3 V DC (pulse)	EEPROM data signal
	36	GND	-	-	Ground
	37	LSU_FAN_REM	I	0/24 V DC	LSUFM: On/Off
	38	CLEAN_MOT_LOCK	O	0/3.3 V DC	WTM lock signal
	39	CLEAN_MOT_REM	I	0/24 V DC	WTM: On/Off
	40	GND	-	-	Ground
YC3	1	GND	-	-	Ground
Connected to engine PWB	2	WTNR_SET/ WTNR_NEAR	-	-	Not used
	3	INTER_LOCK	-	-	Not used
	4	IH_CORE_SENS	-	-	Not used
	5	IH_CORE_MOT_REM	-	-	Not used
	6	IH_CORE_CLK	-	-	Not used
	7	WTNR_LED/ CLEAN_MOT_CL	I	0/3.3 V DC (pulse)	WTS1 LED emitter signal
	8	IH_COIL_FAN_ALM	O	0/3.3 V DC	FUFFM alarm signal
	9	IH_COIL_FAN_H	I	0/24 V DC	FUFFM: On/Off
	10	IH_COIL_FAN_L	I	0/24 V DC	FUFFM: On/Off
	11	EXIT_FAN	I	0/24 V DC	EFFM: On/Off
	12	VIB_MOT_REM	-	-	Not used
	13	JUNC_SOL_REM	I	0/24 V DC	FSSOL: On/Off (ACT)

Connector	Pin	Signal	I/O	Voltage	Description
YC3	14	JUNC_SOL_RET	I	0/24 V DC	FSSOL: On/Off (RET)
Connected to engine PWB	15	GND	-	-	Ground
	16	EXIT_PAPER_SENS	O	0/3.3 V DC	EFS: On/Off
	17	EXIT_FEED_SENS	O	0/3.3 V DC	SBS: On/Off
	18	SB_MOT_REM	I	0/3.3 V DC	EM: On/Off
	19	SB_MOT_PH	I	0/3.3 V DC	EM control signal
	20	SB_MOT_CLK	I	0/3.3 V DC (pulse)	EM clock signal
	21	SB_MOT_PD	I	0/3.3 V DC	EM control signal
	22	SB_MOT_DIR	I	0/3.3 V DC	EM drive switch signal
	23	GND	-	-	Ground
	24	WTNR_VCONT_FULL	I	0/24 V DC	DEVFM2: On/Off
	25	THOP_DIR	I	0/24 V DC	DEVFM2: On/Off
	26	DLP_FAN_CLR_H	I	0/24 V DC	DEVFM1: On/Off
	27	DLP_FAN_CLR_L	I	0/24 V DC	DEVFM1: On/Off
	28	WTNR_FULL	O	Analog	WTS2 detection signal
	29	WTNR_NEAR	O	Analog	WTS2 detection signal
	30	WTNR_VCONT_NEAR	I	0/3.3 V DC	WTS2 control signal
	31	GND	-	-	Ground
	32	WTNR_LED	-	-	Not used
	33	THOP_MOT_Y_DIR	-	-	Not used
	34	THOP_MOT_C_DIR	-	-	Not used
	35	THOP_MOT_BK_DIR	-	-	Not used
	36	ROT_HP_SENS	-	-	Not used
	37	THOP_MOT_Bk_REM	-	-	Not used
	38	THOP_MOT_M_REM	-	-	Not used
	39	THOP_MOT_C_REM	-	-	Not used
	40	THOP_MOT_Y_REM	-	-	Not used
	41	GND	-	-	Ground
	42	ENCODE_ Bk	-	-	Not used

Connector	Pin	Signal	I/O	Voltage	Description
YC3	43	ENCODE_M	-	-	Not used
Connected to engine PWB	44	ENCODE_C	-	-	Not used
	45	ENCODE_Y	-	-	Not used
	46	THOP_ Bk	-	-	Not used
	47	THOP_M	-	-	Not used
	48	THOP_C	-	-	Not used
	49	THOP_Y	-	-	Not used
	50	GND	-	-	Ground
YC4	1	5V	-	-	Not used
Connected to fuser front fan motor and eject front fan motor	2	LED1	-	-	Not used
	3	5V	-	-	Not used
	4	LED2	-	-	Not used
	5	IH_COIL_FAN_ALM	I	0/3.3 V DC	FUFFM alarm signal
	6	GND	-	-	Ground
	7	IH_COIL_FAN	O	0/24 V DC	FUFFM: On/Off
	8	24V	O	24 V DC	24 V DC power to EFFM
	9	EXIT FAN	O	0/24 V DC	EFFM: On/Off
YC5	1	ROT_MOT_A	-	-	Not used
Connected to eject unit	2	ROT_MOT_B	-	-	Not used
	3	ROT_MOT_A/	-	-	Not used
	4	ROT_MOT_B/	-	-	Not used
	5	GND	-	-	Not used
	6	ROT_HP_SENS	-	-	Not used
	7	5V	-	-	Not used
	8	SB_MOT_B/	O	0/24 V DC (pulse)	EM drive control signal
	9	SB_MOT_A/	O	0/24 V DC (pulse)	EM drive control signal
	10	SB_MOT_B	O	0/24 V DC (pulse)	EM drive control signal
	11	SB_MOT_A	O	0/24 V DC (pulse)	EM drive control signal
	12	GND	-	-	Ground
	13	EXIT_FEED_SENS	I	0/3.3 V DC	SBS: On/Off
	14	5V	O	5 V DC	5 V DC power to SBS
	15	GND	-	-	Ground
	16	EXIT_PAPER_SENS	I	0/3.3 V DC	EFS: On/Off
	17	5V	O	5 V DC	5 V DC power to EFS

Connector	Pin	Signal	I/O	Voltage	Description
YC5	18	+24V1	O	24 V DC	24 V DC power to FSSOL
Connected to eject unit	19	JUNC_SOL_KYU	O	0/24 V DC	FSSOL: On/Off (ACT)
	20	JUNC_SOL_FUK	O	0/24 V DC	FSSOL: On/Off (RET)
YC6	1	24V	O	24 V DC	24 V DC power to DEVFM2
Connected to developer fan motor 1/2	2	DLP_FAN_Bk	O	0/24 V DC	DEVFM2: On/Off
	3	24V	O	24 V DC	24 V DC power to DEVFM1
	4	DLP_FAN_M	O	0/24 V DC	DEVFM1: On/Off
YC7	1	3.3V2	O	3.3 V DC	3.3 V DC power to DRPWB-K
Connected to drum unit K	2	EEP_SCL1	O	0/3.3 V DC (pulse)	EEPROM clock signal
	3	EEP_SDA1	I/O	0/3.3 V DC (pulse)	EEPROM data signal
	4	GND	-	-	Ground
	5	DRM_ADR0_Bk	-	-	Not used
	6	DRM_ADR1_Bk	-	-	Not used
	7	24V	O	24 V DC	24 V DC power to CL-K
	8	ERS_Bk_REM	O	0/24 V DC	CL-K: On/Off
	9	GND	-	-	Not used
	10	DRM_INDEX_Bk	-	-	Not used
	11	GND	-	-	Not used
YC8	1	5V	O	5 V DC	5 V DC power to WTS1
Connected to waste toner sensor 1/2	2	WTNR_FULL	I	Analog	WTS1 detection signal
	3	WTNR_LED	O	0/3.3 V DC (pulse)	WTS1 LED emitter signal
	4	5V_LED	O	5 V DC	5 V DC power to WTS1
	5	GND	-	-	Ground
	6	WTNR_NEAR	I	Analog	WTS2 detection signal
	7	5V	O	5 V DC	5 V DC power to WTS2
	8	ECO_SENS	-	-	Not used
	9	GND	-	-	Not used
	10	3.3V1	-	-	Not used
YC9	1	TPD_TEMP_BK	I	Analog	Developer thermistor K detection signal
Connected to developer unit K	2	DLP_VCONT_BK_1	O	0/3.3 V DC	TS-K control signal
	3	TPD_BK_1	I	Analog	TS-K detection signal
	4	TN_CLK_BK	O	0/3.3 V DC (pulse)	Clock signal
	5	GND	-	-	Ground

Connector	Pin	Signal	I/O	Voltage	Description
YC9	6	DLP_ADR1_BK	-	-	Not used
Connected to developer unit K	7	DLP_ADR0_BK	-	-	Not used
	8	EEP_SDA1	I/O	0/3.3 V DC (pulse)	EEPROM data signal
	9	EEP_SCL1	O	0/3.3 V DC (pulse)	EEPROM clock signal
	10	3.3V2	O	3.3 V DC	3.3 V DC power to TS-K
	11	3V	O	3.3 V DC	3.3 V DC power to VM-K
	12	VIB_MOT	O	0/24 V DC	VM-K: On/Off
YC10	1	3.3V2	O	3.3 V DC	3.3 V DC power to DRPWB-M
Connected to drum unit M	2	EEP_SCL1	O	0/3.3 V DC (pulse)	EEPROM clock signal
	3	EEP_SDA1	I/O	0/3.3 V DC (pulse)	EEPROM data signal
	4	GND	-	-	Ground
	5	DRM_ADR0_M	-	-	Not used
	6	DRM_ADR1_M	-	-	Not used
	7	24V	O	24 V DC	24 V DC power to CL-M
	8	ERS_M_REM	O	0/24 V DC	CL-M: On/Off
YC11	1	TPD_TEMP_M	I	Analog	Developer thermistor M detection signal
Connected to developer unit M	2	DLP_VCONT_M_1	O	0/3.3 V DC	DEVPWB-M control signal
	3	TPD_M_1	I	Analog	DEVPWB-M detection signal
	4	TN_CLK_M	O	0/3.3 V DC (pulse)	Clock signal
	5	GND	-	-	Ground
	6	DLP_ADR1_M	-	-	Not used
	7	DLP_ADR0_M	-	-	Not used
	8	EEP_SDA1	I/O	0/3.3 V DC (pulse)	EEPROM data signal
	9	EEP_SCL1	O	0/3.3 V DC (pulse)	EEPROM clock signal
	10	3.3V2	O	3.3 V DC	3.3 V DC power to DEVPWB-M
	11	3V	O	3.3 V DC	3.3 V DC power to VM-M
	12	VIB_MOT	O	0/24 V DC	VM-M: On/Off
YC12	1	3.3V2	O	3.3 V DC	3.3 V DC power to DRPWB-C
Connected to drum unit C	2	EEP_SCL1	O	0/3.3 V DC (pulse)	EEPROM clock signal
	3	EEP_SDA1	I/O	0/3.3 V DC (pulse)	EEPROM data signal
	4	GND	-	-	Ground
	5	DRM_ADR0_C	-	-	Not used
	6	DRM_ADR1_C	-	-	Not used
	7	24V	O	24 V DC	24 V DC power to CL-C
	8	ERS_C_REM	O	0/24 V DC	CL-C: On/Off

Connector	Pin	Signal	I/O	Voltage	Description
YC13	1	TPD_TEMP_C	I	Analog	Developer thermistor C detection signal
Connected to developer unit C	2	DLP_VCONT_C_1	O	0/3.3 V DC	DEVPWB-C control signal
	3	TPD_C_1	I	Analog	DEVPWB-C detection signal
	4	TN_CLK_C	O	0/3.3 V DC (pulse)	Clock signal
	5	GND	-	-	Ground
	6	DLP_ADR1_C	-	-	Not used
	7	DLP_ADR0_C	-	-	Not used
	8	EEP_SDA1	I/O	0/3.3 V DC (pulse)	EEPROM data signal
	9	EEP_SCL1	O	0/3.3 V DC (pulse)	EEPROM clock signal
	10	3.3V2	O	3.3 V DC	3.3 V DC power to DEVPWB-C
	11	3V	O	3.3 V DC	3.3 V DC power to VM-C
	12	VIB_MOT	O	0/24 V DC	VM-C: On/Off
YC14	1	3.3V2	O	3.3 V DC	3.3 V DC power to DRPWB-Y
Connected to drum unit Y	2	EEP_SCL1	O	0/3.3 V DC (pulse)	EEPROM clock signal
	3	EEP_SDA1	I/O	0/3.3 V DC (pulse)	EEPROM data signal
	4	GND	-	-	Ground
	5	DRM_ADR0_ Y	-	-	Not used
	6	DRM _ADR1_ Y	-	-	Not used
	7	24V	O	24 V DC	24 V DC power to CL-Y
	8	ERS_ Y _REM	O	0/24 V DC	CL-Y: On/Off
YC15	1	TPD_TEMP_Y	I	Analog	Developer thermistor Y detection signal
Connected to developer unit Y	2	DLP_VCONT_Y_1	O	0/3.3 V DC	DEVPWB-Y control signal
	3	TPD_Y_1	I	Analog	DEVPWB-Y detection signal
	4	TN_CLK_Y	O	0/3.3 V DC (pulse)	Clock signal
	5	GND	-	-	Ground
	6	DLP_ADR1_Y	-	-	Not used
	7	DLP_ADR0_Y	-	-	Not used
	8	EEP_SDA1	I/O	0/3.3 V DC (pulse)	EEPROM data signal
	9	EEP_SCL1	O	0/3.3 V DC (pulse)	EEPROM clock signal
	10	3.3V2	O	3.3 V DC	3.3 V DC power to DEVPWB-Y
	11	3V	O	3.3 V DC	3.3 V DC power to VM-Y
	12	VIB_MOT	O	0/24 V DC	VM-Y: On/Off

Connector	Pin	Signal	I/O	Voltage	Description
YC16	1	NC	-	-	-
Connected to front cover switch, LSU fan motor and waste toner motor	2	NC	-	-	-
	3	NC	-	-	-
	4	NC	-	-	-
	5	FRONT_OPEN	I	0/3.3 V DC	FRCSW: On/Off
	6	GND	-	-	Ground
	7	24V	O	24 V DC	24 V DC power to LSUFM
	8	LSU_FAN_OUT	O	DC0V/24V	LSUFM: On/Off
	9	CL_MOT1	O	DC0V/24V	WTM: On/Off
	10	CL_MOT2	O	24 V DC	24 V DC power to WTM
	11	GND	-	-	Ground
YC17	1	GND	-	-	Not used
Connected to eject diffusioon fan motor	2	IH_CORE_SENS	-	-	Not used
	3	5V	-	-	Not used
	4	IH_CORE_B/	-	-	Not used
	5	IH_CORE_B	-	-	Not used
	6	IH_CORE_A	-	-	Not used
	7	IH_CORE_A/	-	-	Not used
	8	24V	O	DC0V/24V	EDFM: On/Off
	9	NC	-	-	Ground
YC19	1	3.3V1	O	3.3 V DC	3.3 V DC power to OTEMS
Connected to outer temper-ature sensor	2	I2C_SDA	I	0/3.3 V DC (pulse)	EEPROM data signal
	3	GND	-	-	Ground
	4	I2C_SCL	O	0/3.3 V DC (pulse)	EEPROM clock signal

2-3-8 Feed PWB 1

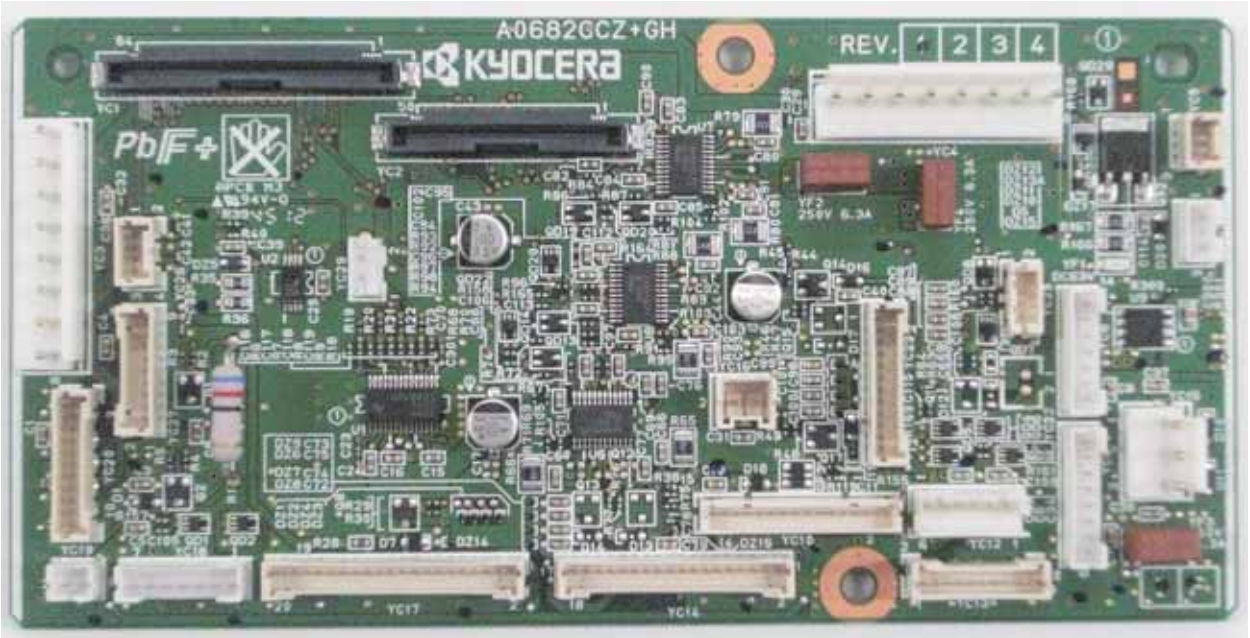

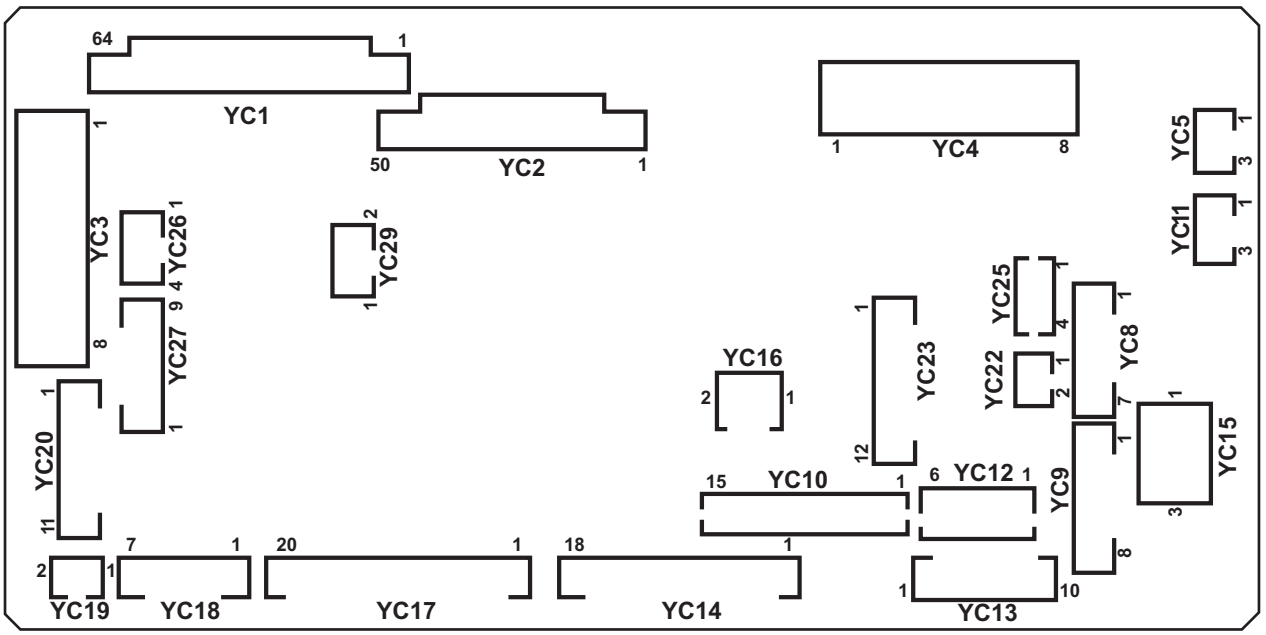

Figure 2-3-9 Feed PWB 1 silk-screen diagram

Connector	Pin	Signal	I/O	Voltage	Description
YC1	1	GND	-	-	Ground
Connected to engine PWB	2	REG_F_LED	I	Analog	IDS1 control signal
	3	REG_SENS_F_P	O	Analog	IDS1 detection signal
	4	REG_SENS_F_S	O	Analog	IDS1 detection signal
	5	GND	-	-	Ground
	6	REG_R_LED	I	Analog	IDS2 control signal
	7	REG_SENS_RP(BK)	O	Analog	IDS2 detection signal
	8	REG_SENS_RS(BK)	O	Analog	IDS2 detection signal
	9	CLN_SOL_REM	I	0/24 V DC	CLSOL: On/Off (ACT)
	10	CLN_SOL_RET	I	0/24 V DC	CLSOL: On/Off (RET)
	11	GND	-	-	Ground
	12	BELT_JAM_SENS	-	-	Not used
	13	DU_SENS	O	0/3.3 V DC	DUS2: On/Off
	14	PRESS_RLS_SENS	O	0/3.3 V DC	TRRS: On/Off
	15	PRESS_RLS_MOT_REM2	I	0/24 V DC	TRRM: On/Off
	16	PRESS_RLS_MOT_REM1	I	0/24 V DC	TRRM: On/Off
	17	DU_FAN	-	-	Not used
	18	DU_OPEN	O	0/3.3 V DC	DUCSW: On/Off
	19	GND	-	-	Ground
	20	DU2_REM(CL_LOW)	I	0/3.3 V DC	DUM2/DUCL2: On/Off
	21	DU2_CLK	I	0/3.3 V DC (pulse)	DUM2 clock signal
	22	DU2_PD	I	0/3.3 V DC	DUM2 control signal
	23	INTER_LOCK	-	-	Not used
	24	GND	-	-	Not used
	25	GND	-	-	Not used
	26	GND	-	-	Not used
	27	GND	-	-	Not used
	28	GND	-	-	Ground
	29	MPF_LIFT1	I	0/24 V DC	MPLM: On/Off
	30	MPF_LIFT2	I	0/24 V DC	MPLM: On/Off
	31	MPF_CL	I	0/24 V DC	MPPFCL: On/Off
	32	MPF_JAM	O	0/3.3 V DC	MPFS: On/Off
	33	MPF_DOWN	O	0/3.3 V DC	MPLS2: On/Off

Connector	Pin	Signal	I/O	Voltage	Description
YC1	34	MPF_UP	O	0/3.3 V DC	MPLS1: On/Off
Connected to engine PWB	35	MPF_PPR	O	0/3.3 V DC	MPPS: On/Off
	36	GND	-	-	Ground
	37	MPF_LNG	O	0/3.3 V DC	MPPLSW: On/Off
	38	MPF_WID3	O	0/3.3 V DC	MPPWSW: On/Off
	39	MPF_WID2	O	0/3.3 V DC	MPPWSW: On/Off
	40	MPF_WID1	O	0/3.3 V DC	MPPWSW: On/Off
	41	MPF_TABLE	O	0/3.3 V DC	MPTSW: On/Off
	42	GND	-	-	Ground
	43	FSR_MOT_BRK	I	0/3.3 V DC	FUM break signal
	44	FSR_MOT_DIR	I	0/3.3 V DC	FUM drive switch signal
	45	FSR_MOT_RDY	O	0/3.3 V DC	FUM ready signal
	46	FSR_MOT_CLK	I	0/3.3 V DC (pulse)	FUM clock signal
	47	FSR_MOT_REM	I	0/3.3 V DC	FUM: On/Off
	48	GND	-	-	Not used
	49	GND	-	-	Ground
	50	EXIT_REAR_FAN_H	I	0/24 V DC	ERFM: On/Off
	51	EXIT_REAR_FAN_L	I	0/24 V DC	ERFM: On/Off
	52	PRESS_REM	-	-	Not used
	53	FSR_RELAY	I	0/3.3 V DC	Fuser relay signal
	54	ZEROC	-	-	Not used
	55	SUB_HEAT_REM	-	-	Not used
	56	MAIN_HEAT_REM	-	-	Not used
	57	GND	-	-	Ground
	58	JOB_SOL_REM	I	0/24 V DC	JSFSSOL: On/Off
	59	JOB_OPEN_SENS	O	0/3.3 V DC	JSOCS: On/Off
	60	JOB_MOT_DIR	I	0/3.3 V DC	JSEM drive switch signal
	61	JOB_MOT_CLK	I	0/3.3 V DC (pulse)	JSEM clock signal
	62	JOB_MOT_REM	I	0/3.3 V DC	JSEM: On/Off
	63	JOB_SET	O	0/3.3 V DC	Job separator set signal
	64	GND	-	-	Ground

Connector	Pin	Signal	I/O	Voltage	Description
YC2	1	GND	-	-	Ground
Connected to engine PWB	2	GND	-	-	Not used
	3	DRM_HEAT_REM	-	-	Not used
	4	POWER_OFF	I	0/3.3 V DC	Power off signal
	5	IH_PWB_FAN(L)_ALM	O	0/3.3 V DC	IHFM alarm signal
	6	IH_PWB_FAN_H	I	0/24 V DC	IHFM: On/Off
	7	IH_PWB_FAN_L	-	-	Not used
	8	GND	-	-	Ground
	9	REG_MOT_REM(CL)	I	0/3.3 V DC	RM/RCL: On/Off
	10	REG_MOT_CLK	I	0/3.3 V DC (pulse)	RM clock signal
	11	REG_MOT_PD	I	0/3.3 V DC	RM control signal
	12	GND	-	-	Ground
	13	DLP_MOT_CLR_DIR	-	-	Not used
	14	DLP_MOT_CLR_RDY	-	-	Not used
	15	DLP_MOT_CLR_CLK	-	-	Not used
	16	DLP_MOT_CLR_REM	-	-	Not used
	17	GND	-	-	Ground
	18	DRM_MOT_CLR_DIR	-	-	Not used
	19	DRM_MOT_CLR_RDY	-	-	Not used
	20	DRM_MOT_BK_CLR_CLK	-	-	Not used
	21	DRM_MOT_CLR_REM	-	-	Not used
	22	GND	-	-	Ground
	23	DLP_MOT_BK_DIR	-	-	Not used
	24	DLP_MOT_BK_RDY	-	-	Not used
	25	DLP_MOT_BK_CLK	-	-	Not used
	26	DLP_MOT_BK_REM	-	-	Not used

Connector	Pin	Signal	I/O	Voltage	Description
YC2	27	GND	-	-	Ground
Connected to engine PWB	28	DRM_MOT_BK_BRK	-	-	Not used
	29	DRM_MOT_BK_DIR	-	-	Not used
	30	DRM_MOT_BK_RDY	-	-	Not used
	31	DRM_MOT_BK_REM	-	-	Not used
	32	GND	-	-	Ground
	33	TRANS_MOT_BRK	I	0/3.3 V DC	TRCM break signal
	34	TRANS_MOT_DIR	I	0/3.3 V DC	TRCM drive switch signal
	35	TRANS_MOT_RDY	O	0/3.3 V DC	TRCM ready signal
	36	TRANS_MOT_CLK	I	0/3.3 V DC (pulse)	TRCM clock signal
	37	TRANS_MOT_REM	I	0/3.3 V DC	TRCM: On/Off
	38	GND	-	-	Ground
	39	TCON_SET	-	-	Not used
	40	DU_ENTER_SENS	O	0/3.3 V DC	DUS1: On/Off
	41	EXIT_FAN	I	0/24 V DC	EFM: On/Off
	42	GND	-	-	Ground
	43	DU1_MOT_REM(CL_H)	I	0/3.3 V DC	DUM1/DUCL1: On/Off
	44	DU1_MOT_CLK	I	0/3.3 V DC (pulse)	DUM1 clock signal
	45	DU1_MOT_PD	I	0/3.3 V DC	DUM1 control signal
	46	EDGE_FAN_H	I	0/24 V DC	FUFM: On/Off
	47	GND	-	-	Ground
	48	LOOP_SENS	O	0/3.3 V DC	LPS: On/Off
	49	M_TEMP	-	-	Not used
	50	GND	-	-	Ground

Connector	Pin	Signal	I/O	Voltage	Description
YC3	1	24V1	O	24 V DC	24 V DC power to EPWB
Connected to engine PWB	2	24V1	O	24 V DC	24 V DC power to EPWB
	3	GND	-	-	Ground
	4	GND	-	-	Ground
	5	5V0	O	5 V DC	5 V DC power to EPWB
	6	GND	-	-	Ground
	7	5V2	O	5 V DC	5 V DC power to EPWB
	8	GND	-	-	Ground
YC4	1	24V1	I	24 V DC	24 V DC power from PSPWB
Connected to power source PWB	2	24V1	I	24 V DC	24 V DC power from PSPWB
	3	24V1	I	24 V DC	24 V DC power from PSPWB
	4	5V	I	5 V DC	5 V DC power from PSPWB
	5	GND	-	-	Ground
	6	GND	-	-	Ground
	7	GND	-	-	Ground
	8	GND	-	-	Ground
YC5	1	GND	-	-	Ground
Connected to power source PWB	2	DRM_HEAT_REM	O	0/3.3 V DC	FH: On/Off
	3	POWER_OFF_24V1	O	0/24 V DC	Sleep mode signal: On/Off
YC10	1	GND	-	-	Ground
Connected to ID sensor1/2 and cleaning solenoid	2	M_TEMP	-	-	Not used
	3	3.3V	O	3.3 V DC	3.3 V DC power to IDS1
	4	REG_F_LED	O	Analog	IDS1 control signal
	5	GND	-	-	Ground
	6	REG_SENS_F_P	I	Analog	IDS1 detection signal
	7	REG_SENS_F_S	I	Analog	IDS1 detection signal
	8	3.3V	O	3.3 V DC	3.3 V DC power to IDS2
	9	REG_R_LED	O	Analog	IDS2 control signal
	10	GND	-	-	Ground
	11	REG_SENS_R_P	I	Analog	IDS2 detection signal
	12	REG_SENS_R_S	I	Analog	IDS2 detection signal
	13	24V1	O	24 V DC	24 V DC power to CLSOL
	14	CLN_SOL_REM	O	0/24 V DC	CLSOL: On/Off (ACT)
	15	CLN_SOL_RET	O	0/24 V DC	CLSOL: On/Off (RET)

Connector	Pin	Signal	I/O	Voltage	Description
YC11	1	IH_PWB_FAN	O	0/24 V DC	IHFM: On/Off
Connected to IH fan motor	2	GND	-	-	Ground
	3	IH_PWB_ALM	I	0/3.3 V DC	IHFM alarm signal
YC12	1	24V2	O	24 V DC	24 V DC power to FPWB2
Connected to feed PWB 2	2	24V2	O	24 V DC	24 V DC power to FPWB2
	3	5V2	O	5 V DC	5 V DC power to FPWB2
	4	GND	-	-	Ground
	5	GND	-	-	Ground
	6	GND	-	-	Ground
YC13	1	TRANS_MOT_BRK	O	0/3.3 V DC	TRM break signal
Connected to transfer motor	2	TRANS_MOT_DIR	O	0/3.3 V DC	TRM drive switch signal
	3	TRANS_MOT_RDY	I	0/3.3 V DC	TRM ready signal
	4	TRANS_MOT_CLK	O	0/3.3 V DC (pulse)	TRM clock signal
	5	TRANS_MOT_REM	O	0/24 V DC	TRM: On/Off
	6	GND	-	-	Ground
	7	24V2	O	24 V DC	24 V DC power to TRM
	8	GND	-	-	Not used
	9	24V2	-	-	Not used
	10	TANK_SET	-	-	Not used
YC14	1	REG_BK_LED	-	-	Not used
Connected to relay PWB	2	REG_BK_SENS1_P	-	-	Not used
	3	REG_BK_SENS1_S	-	-	Not used
	4	BELT_JAM_SENS	-	-	Not used
	5	DU_SENS	I	0/3.3 V DC	DUS2: On/Off
	6	PRESS_RLS_SENS	I	0/3.3 V DC	TRRS: On/Off
	7	5V2	O	5 V DC	5 V DC power to RYPWB
	8	PRESS_RLS_MOT21	O	0/24 V DC	TRRM: On/Off
	9	PRESS_RLS_MOT2	O	0/24 V DC	TRRM: On/Off

Connector	Pin	Signal	I/O	Voltage	Description
YC14	10	24V2	O	24 V DC	24 V DC power to RYPWB
Connected to relay PWB	11	DU_FAN	-	-	Not used
	12	DU_CL_LOWER_REM	O	0/24 V DC	DUCL2: On/Off
	13	DU_OPEN_SW	I	0/3.3 V DC	DUCSW: On/Off
	14	DU2_B/	O	0/24 V DC (pulse)	DUM2 drive control signal
	15	DU2_A/	O	0/24 V DC (pulse)	DUM2 drive control signal
	16	DU2_B	O	0/24 V DC (pulse)	DUM2 drive control signal
	17	DU2_A	O	0/24 V DC (pulse)	DUM2 drive control signal
	18	GND	-	-	Not used
YC15	1	24V1	O	24 V DC	24 V DC power to PCUSW
Connected to paper con-veying unit switch	2	N.C	-	-	Not used
	3	24V2	I	24 V DC	24 V DC power from PCUSW
YC16	1	+24V2	O	24 V DC	24 V DC power to HVPWB2
Connected to high voltage PWB 2	2	GND	-	-	Ground
YC17	1	GND	-	-	Not used
Connected to relay PWB	2	GND	-	-	Not used
	3	CLN_SOL_REM	-	-	CLSOL: On/Off
	4	24V2	-	-	24 V DC power to RYPWB
	5	MPF_LIFT_MOT_B	O	0/24 V DC	MPLM: On/Off
	6	MPF_LIFT_MOT_A	O	0/24 V DC	MPLM: On/Off
	7	24V2	O	24 V DC	24 V dc power to RYPWB
	8	MPF_CL_REM	O	0/24 V DC	MPPFCL: On/Off
	9	MPF_JAM_SENS	I	0/3.3 V DC	MPFS: On/Off
	10	MPF_LIFT_DOWN_SENS	I	0/3.3 V DC	MPLS2: On/Off
	11	MPF_LIFT_UP_SENS	I	0/3.3 V DC	MPLS1: On/Off
	12	MPF_PPR_SET	I	0/3.3 V DC	MPPS: On/Off
	13	LED_3.3V3	O	3.3 V DC	3.3 V DC power to RYPWB
	14	MPF_LNG	I	0/3.3 V DC	MPPLSW: On/Off
	15	MPF_WID3	I	0/3.3 V DC	MPPWSW: On/Off
	16	MPF_WID2	I	0/3.3 V DC	MPPWSW: On/Off

Connector	Pin	Signal	I/O	Voltage	Description
YC17	17	MPF_WID1	I	0/3.3 V DC	MPPWSW: On/Off
Connected to relay PWB	18	MPF_TABLE	I	0/3.3 V DC	MPTSW: On/Off
	19	GND	-	-	Ground
	20	GND	-	-	Ground
YC18	1	FSR_MOT_BRK	O	0/3.3 V DC	FUM break signal
Connected to fuser motor	2	FSR_MOT_DIR	O	0/3.3 V DC	FUM drive switch signal
	3	FSR_MOT_RDY	I	0/3.3 V DC	FUM ready signal
	4	FSR_MOT_CLK	O	0/3.3 V DC (pulse)	FUM clock signal
	5	FSR_MOT_REM	O	0/24 V DC	FUM: On/Off
	6	GND	-	-	Ground
	7	24V2	O	24 V DC	24 V DC power to FUM
YC19	1	EXIT_REAR_FAN	O	0/24 V DC	ERFM: On/Off
Connected to eject rear fan motor	2	24V1	O	24 V DC	24 V DC power to ERFM
YC20	1	JOB_SET	I	0/3.3 V DC	Job separator set signal
Connected to job separator	2	GND	-	-	Ground
	3	GND	-	-	Ground
	4	JOB_MOT_REM	O	0/24 V DC	JSEM: On/Off
	5	24V1	O	24 V DC	24 V DC power to JSMPWB
	6	JOB_MOT_CLK	O	0/3.3 V DC (pulse)	JSEM clock signal
	7	5V	O	5 V DC	5 V DC power to JSMPWB
	8	JOB_MOT_DIR	O	0/3.3 V DC	JSEM drive switch signal
	9	JOB_OPEN_SENS	I	0/3.3 V DC	JSOCS: On/Off
	10	JOB_SOL_REM	O	0/24 V DC	JSFSSOL: On/Off
	11	NC	-	-	Not used
YC22	1	24V2	O	24 V DC	24 V DC power to RCL
Connected to registration clutch (30ppm/ 35ppm model only)	2	REG_CL_REM	O	0/24 V DC	RCL: On/Off

Connector	Pin	Signal	I/O	Voltage	Description
YC23	1	DU_ENTER_SENS	I	0/3.3 V DC	DUS1: On/Off
Connected to relay PWB	2	EXIT_FAN	O	0/24 V DC	EFM: On/Off
	3	24V2	O	24 V DC	24 V DC power to RYPWB
	4	DU_CL_UPPER_REM	O	0/24 V DC	DUCL1: On/Off
	5	GND	-	-	Ground
	6	DU1_B/	O	0/24 V DC (pulse)	DUM1 drive control signal
	7	DU1_A/	O	0/24 V DC (pulse)	DUM1 drive control signal
	8	DU1_B	O	0/24 V DC (pulse)	DUM1 drive control signal
	9	DU1_A	O	0/24 V DC (pulse)	DUM1 drive control signal
	10	EDGE_FAN_REM	O	0/24 V DC	FUFM: On/Off
	11	LOOP_SENS	I	0/3.3 V DC	LPS: On/Off
	12	3.3V	O	3.3 V DC	3.3 V DC power to RYPWB
YC25	1	REG_B/	O	0/24 V DC (pulse)	RM drive control signal
Connected to registration motor (45ppm/ 55ppm model only)	2	REG_A/	O	0/24 V DC (pulse)	RM drive control signal
	3	REG_B	O	0/24 V DC (pulse)	RM drive control signal
	4	REG_A	O	0/24 V DC (pulse)	RM drive control signal
YC26	1	3.3V2	O	3.3 V DC	3.3 V DC power to EPWB
Connected to engine PWB	2	3.3V3	O	3.3 V DC	3.3 V DC power to EPWB
	3	GND	-	-	Ground
	4	GND	-	-	Ground
YC27	1	MAIN_HEAT_REM	-	-	Not used
Connected to fuser IH PWB	2	SUB_HEAT_REM	-	-	Not used
	3	24V2	-	-	Not used
	4	ZEROC	-	-	Not used
	5	GND	-	-	Ground
	6	GND	-	-	Ground
	7	FSR_RELAY	O	0/3.3 V DC	Fuser relay signal
	8	24V1	O	24 V DC	24 V DC power to FIHPWB
	9	RELAY_24V	-	-	Not used

2-3-9 Feed PWB 2

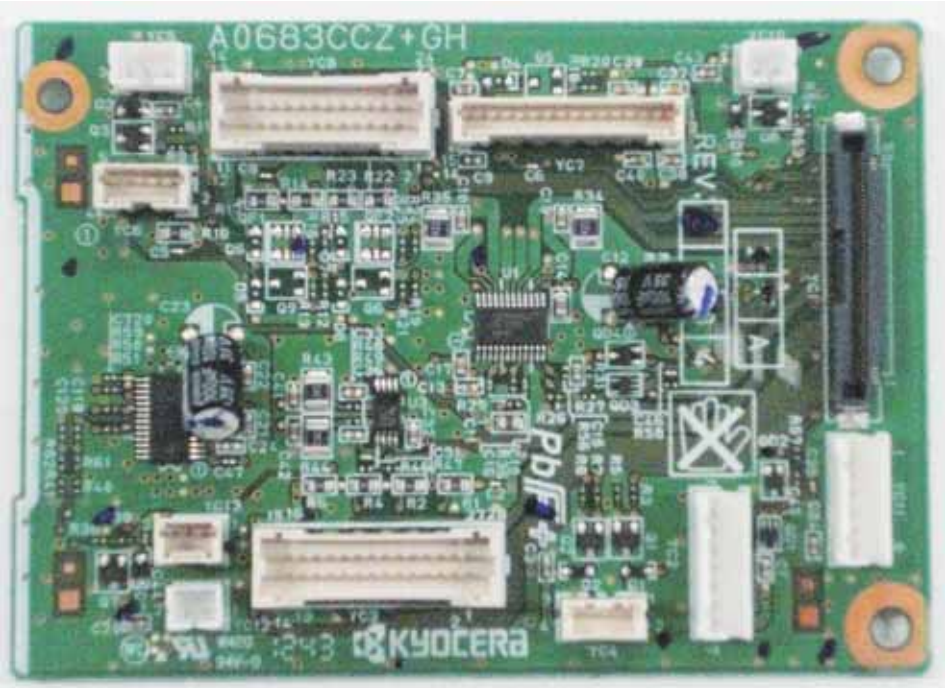

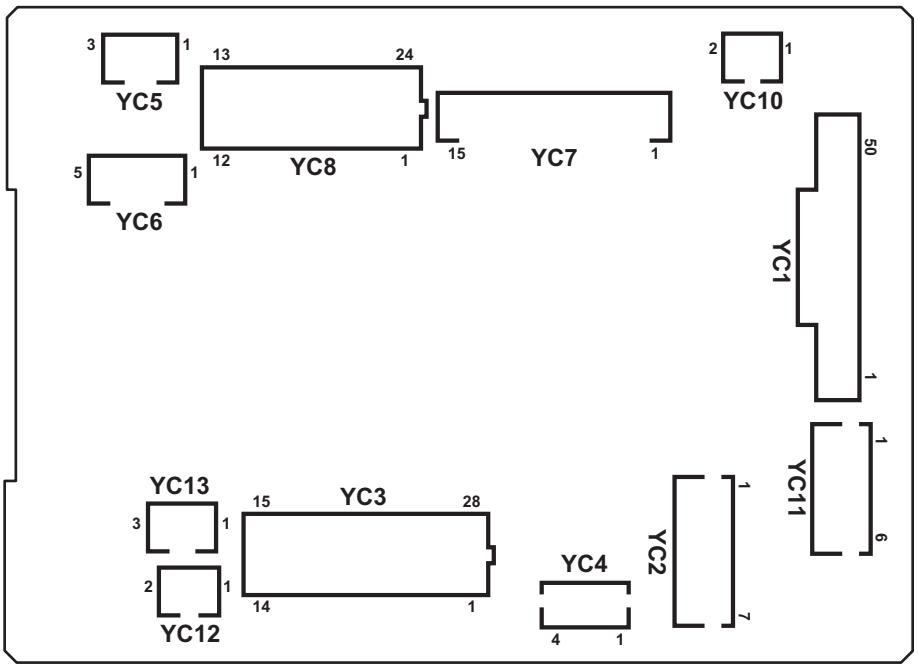

Figure 2-3-10 Feed PWB 2 silk-screen diagram

Connector	Pin	Signal	I/O	Voltage	Description
YC1	1	GND	-	-	Ground
Connected to engine PWB	2	FEED_MOT_REM	I	0/3.3 V DC	PFM: On/Off
	3	FEED_MOT_CLK	I	0/3.3 V DC (pulse)	PFM clock signal
	4	FEED_MOT_RDY	O	0/3.3 V DC	PFM ready signal
	5	FEED_MOT_DIR	I	0/3.3 V DC	PFM drive switch signal
	6	FEED_CL1_REM	I	0/24 V DC	PFCL1: On/Off
	7	FEED_CL2_REM	I	0/24 V DC	PFCL2: On/Off
	8	ASIST_CL2	I	0/24 V DC	ASCL2: On/Off
	9	LIFT_MOT2_REM	I	0/24 V DC	LM2: On/Off
	10	GND	-	-	Ground
	11	LIFT_MOT1_REM 1	I	0/24 V DC	LM1: On/Off
	12	CAS2_WID	O	0/3.3 V DC	PWSW2: On/Off
	13	CAS2_LNG3	O	0/3.3 V DC	PLSW2: On/Off
	14	CAS2_LNG2	O	0/3.3 V DC	PLSW2: On/Off
	15	CAS2_LNG1	O	0/3.3 V DC	PLSW2: On/Off
	16	CAS1_WID	O	0/3.3 V DC	PWSW1: On/Off
	17	CAS1_LNG3	O	0/3.3 V DC	PLSW1: On/Off
	18	CAS1_LNG2	O	0/3.3 V DC	PLSW1: On/Off
	19	CAS1_LNG1	O	0/3.3 V DC	PLSW1: On/Off
	20	GND	-	-	Ground
	21	CAS2_QUANT2	O	0/3.3 V DC	PGS2(L): On/Off
	22	CAS2_QUANT1	O	0/3.3 V DC	PGS2(U): On/Off
	23	CAS1_QUANT2	O	0/3.3 V DC	PGS1(L): On/Off
	24	CAS1_QUANT1	O	0/3.3 V DC	PGS1(U): On/Off
	25	LIFT_MOT1_LOCK	O	0/3.3 V DC	LM1 lock signal
	26	LIFT_MOT2_LOCK	O	0/3.3 V DC	LM2 lock signal
	27	CURRENT_SIG	O	0/3.3 V DC	Current signal
	28	V-FEED_CL	I	0/24 V DC	PCCL: On/Off
	29	COVER_OPEN	O	0/3.3 V DC	PCCSW: On/Off
	30	FEED2_SENS	O	0/3.3 V DC	PFPCS1: On/Off
	31	CAS1_P0	O	0/3.3 V DC	FS1: On/Off
	32	CAS1_LIFT_UP	O	0/3.3 V DC	LS1: On/Off
	33	GND	-	-	Ground
	34	CAS1_EMPTY	O	0/3.3 V DC	PS1: On/Off

Connector	Pin	Signal	I/O	Voltage	Description
YC1	35	PICK_SOL1_RET	I	0/24 V DC	PUSOL1: On/Off (RET)
Connected to engine PWB	36	PICK_SOL1_REM	I	0/24 V DC	PUSOL1: On/Off (ACT)
	37	CAS2_P0	O	0/3.3 V DC	FS2: On/Off
	38	CAS2_LIFT_UP	O	0/3.3 V DC	LS2: On/Off
	39	CAS2_EMPTY	O	0/3.3 V DC	PS2: On/Off
	40	PICK_SOL2_RET	I	0/24 V DC	PUSOL2: On/Off (RET)
	41	PICK_SOL2_REM	I	0/24 V DC	PUSOL2: On/Off (ACT)
	42	GND	-	-	Ground
	43	REG_SENS	O	0/3.3 V DC	RS: On/Off
	44	FEED1_SENS	O	0/3.3 V DC	PCS: On/Off
	45	BEND_SENS	O	0/3.3 V DC	RDS: On/Off
	46	MID_MOT_PH	I	0/3.3 V DC	MM control signal
	47	MID_MOT_REM	I	0/3.3 V DC	MM/MCL: On/Off
	48	MID_MOT_CLK	I	0/3.3 V DC (pulse)	MM clock signal
	49	MID_MOT_PD	I	0/3.3 V DC	MM control signal
	50	ASIST_CL1	I	0/24 V DC	ASCL1: On/Off
YC2	1	FEED_MOT_GAIN	-	-	Not used
Connected to paper feed motor	2	FEED_MOT_DIR	O	0/3.3 V DC	PFM drive switch signal
	3	FEED_MOT_RDY	I	0/3.3 V DC	PFM ready signal
	4	FEED_MOT_CLK	O	0/3.3 V DC (pulse)	PFM clock signal
	5	FEED_MOT_REM	O	0/24 V DC	PFM: On/Off
	6	GND	-	-	Ground
	7	24V2	O	24 V DC	24 V DC power to PFM
YC3	1	CAS1_LNG1	I	0/3.3 V DC	PLSW1: On/Off
Connected to paper length switch 1/2, paper width switch 1/2, lift motor 1/2, paper gauge sensor 1(U)/(L) and paper gauge sensor 2(U)/(L)	2	CAS1_LNG2	I	0/3.3 V DC	PLSW1: On/Off
	3	GND	-	-	Ground
	4	CAS1_LNG3	I	0/3.3 V DC	PLSW1: On/Off
	5	CAS1_WID	I	0/3.3 V DC	PWSW1: On/Off
	6	GND	-	-	Ground
	7	CAS2_LNG1	I	0/3.3 V DC	PLSW2: On/Off
	8	CAS2_LNG2	I	0/3.3 V DC	PLSW2: On/Off
	9	GND	-	-	Ground
	10	CAS2_LNG3	I	0/3.3 V DC	PLSW2: On/Off
	11	CAS2_WID	I	0/3.3 V DC	PWSW2: On/Off
	12	GND	-	-	Ground

Connector	Pin	Signal	I/O	Voltage	Description
YC3	13	LIFT_MOT1_-	O	0/24 V DC	LM1: On/Off
Connected to paper length switch 1/2, paper width switch 1/2, lift motor 1/2, paper gauge sensor 1(U)/(L) and paper gauge sensor 2(U)/(L)	14	LIFT_MOT1_+	O	0/24 V DC	LM1: On/Off
	15	LIFT_MOT2_-	O	0/24 V DC	LM2: On/Off
	16	LIFT_MOT2_+	O	0/24 V DC	LM2: On/Off
	17	LED_5V	O	5 V DC	5 V DC power to PGS1(U)
	18	GND	-	-	Ground
	19	CAS1_QUANT1	I	0/3.3 V DC	PGS1(U): On/Off
	20	LED_5V	O	5 V DC	5 V DC power to PGS1(L)
	21	GND	-	-	Ground
	22	CAS1_QUANT2	I	0/3.3 V DC	PGS1(L): On/Off
	23	LED_5V	O	5 V DC	5 V DC power to PGS2(U)
	24	GND	-	-	Ground
	25	CAS2_QUANT1	I	0/3.3 V DC	PGS2(U): On/Off
	26	LED_5V	O	5 V DC	5 V DC power to PGS2(L)
	27	GND	-	-	Ground
	28	CAS2_QUANT2	I	0/3.3 V DC	PGS2(L): On/Off
YC4	1	FEED_CL1_REM	O	0/24 V DC	PFCL1: On/Off
Connected to paper feed clutch 1/2	2	24V2	O	24 V DC	PFCL124 V DC power to PFCL1
	3	FEED_CL2_REM	O	0/24 V DC	PFCL2: On/Off
	4	24V2	O	24 V DC	24 V DC power to PFCL2
YC5	1	NC	-	-	Not used
Connected to paper conveying clutch	2	24V2	O	24 V DC	24 V DC power to PCCL
	3	V-FEED_CL	O	0/24 V DC	PCCL: On/Off
YC6	1	LED_5V	O	5 V DC	5 V DC power to PCS
Connected to paper conveying sensor and paper conveying cover switch	2	GND	-	-	Ground
	3	FEED2_SENS	I	0/3.3 V DC	PCS: On/Off
	4	FEED_COVER_OPEN	I	0/3.3 V DC	PCCSW: On/Off
	5	GND	-	-	Ground

Connector	Pin	Signal	I/O	Voltage	Description
YC7	1	MID_B/	O	0/24 V DC (pulse)	MM drive control signal
Connected to middle motor*2, middle sensor ,registration sensor and middle clutch*1 (*1:30ppm/ 35ppm model only *2:45ppm/ 55ppm model only)	2	MID_A/	O	0/24 V DC (pulse)	MM drive control signal
	3	MID_B	O	0/24 V DC (pulse)	MM drive control signal
	4	MID_A	O	0/24 V DC (pulse)	MM drive control signal
	5	BEND_SENS	-	-	Not used
	6	GND	-	-	Not used
	7	5V	-	-	Not used
	8	GND	-	-	Ground
	9	FEED1_SENS	I	0/3.3 V DC	MS: On/Off
	10	5V	O	5 V DC	5 V DC power to MS
	11	GND	-	-	Ground
	12	REG_SENS	I	0/3.3 V DC	RS: On/Off
	13	5V	O	5 V DC	5 V DC power to RS
	14	MID_CL_REM	O	0/24 V DC	MCL: On/Off
	15	24V2	O	24 V DC	24 V DC power to MCL
YC8	1	24V2	O	24 V DC	24 V DC power to PUSOL1
Connected to primary paper feed unit	2	PICK_SOL1_REM	O	0/24 V DC	PUSOL1: On/Off (ACT)
	3	PICK_SOL1_RET	O	0/24 V DC	PUSOL1: On/Off (RET)
	4	LED_5V	O	5 V DC	5 V DC power to PS1
	5	GND	-	-	Ground
	6	CAS1_EMPTY_SENS	I	0/3.3 V DC	PS1: On/Off
	7	LED_5V	O	5 V DC	5 V DC power to LS1
	8	GND	-	-	Ground
	9	CAS1_LIFT_UP_SENS	I	0/3.3 V DC	LS1: On/Off
	10	5V	O	5 V DC	5 V DC power to FS1
	11	CAS1_P0_SENS	I	0/3.3 V DC	FS1: On/Off
	12	GND	-	-	Ground
	13	24V2	O	24 V DC	24 V DC power to PUSOL2
	14	PICK_SOL2_REM	O	0/24 V DC	PUSOL2: On/Off (ACT)
	15	PICK_SOL2_RET	O	0/24 V DC	PUSOL2: On/Off (RET)
	16	LED_5V	O	5 V DC	5 V DC power to PS2
	17	GND	-	-	Ground
	18	CAS2_EMPTY_SENS	I	0/3.3 V DC	PS2: On/Off
	19	LED_5V	O	5 V DC	5 V DC power to LS2

Connector	Pin	Signal	I/O	Voltage	Description
YC8	20	GND	-	-	Ground
Connected to primary paper feed unit	21	CAS2_LIFT_UP_SENS	I	0/3.3 V DC	LS2: On/Off
	22	5V	O	5 V DC	5 V DC power to FS2
	23	CAS2_P0_SENS	I	0/3.3 V DC	FS2: On/Off
	24	GND	-	-	Ground
YC10	1	ASIST_CL1	O	0/24 V DC	ASCL1: On/Off
Connected to assist clutch 1 (45ppm/ 55ppm model only)	2	24V2	O	24 V DC	24 V DC power to ASCL1
YC11	1	GND	-	-	Ground
Connected to feed PWB 1	2	GND	-	-	Ground
	3	GND	-	-	Ground
	4	5V	I	5 V DC	5 V DC power from FPWB1
	5	24V2	I	24 V DC	24 V DC power from FPWB1
	6	24V2	I	24 V DC	24 V DC power from FPWB1
YC12	1	ASIST_CL2	O	0/24 V DC	ASCL2: On/Off
Connected to assist clutch 2 (45ppm/ 55ppm model only)	2	24V2	O	24 V DC	24 V DC power to ASCL2
YC13	1	CURRENT_SIG	I	0/3.3 V DC	Current signal
Connected to current PWB	2	GND	-	-	Ground
	3	5V	I	5 V DC	5 V DC power from CRPWB

2-3-10 Relay PWB

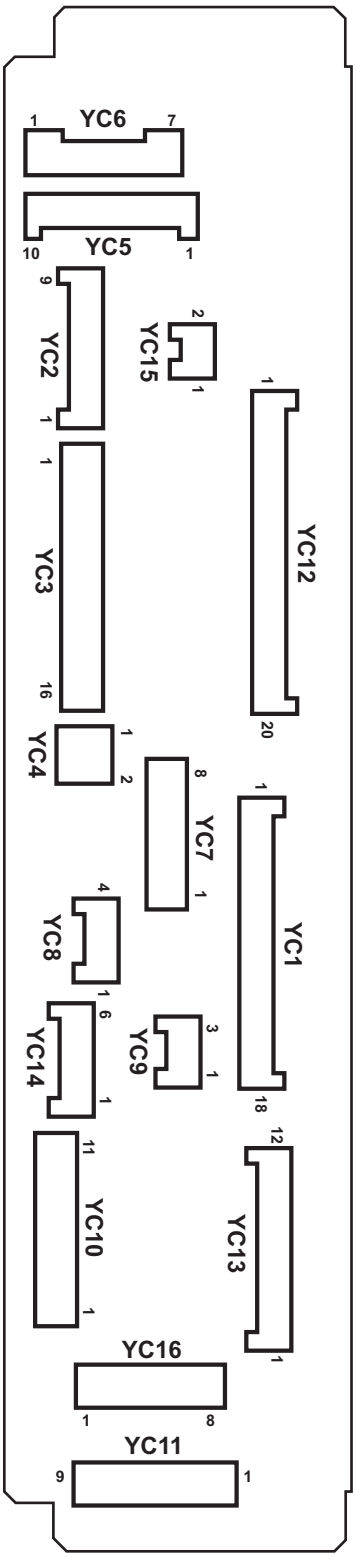

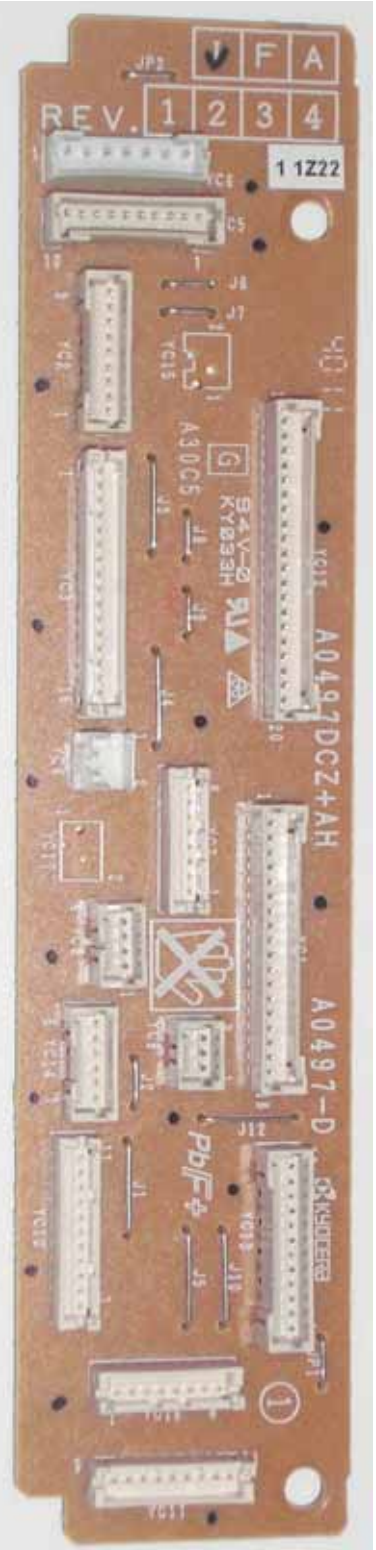

Figure 2-3-11 Relay PWB silk-screen diagram

Connector	Pin	Signal	I/O	Voltage	Description
YC1	1	GND	-	-	Not used
Connected to feed PWB 1	2	DU2_A	I	0/24 V DC (pulse)	DUM2 drive control signal
	3	DU2_B	I	0/24 V DC (pulse)	DUM2 drive control signal
	4	DU2_A/	I	0/24 V DC (pulse)	DUM2 drive control signal
	5	DU2_B/	I	0/24 V DC (pulse)	DUM2 drive control signal
	6	DU_OPEN_SW	O	0/3.3 V DC	DUCSW: On/Off
	7	DU_CL_LOWER_REM	I	0/24 V DC	DUCL2: On/Off
	8	DU_FAN	-	-	Not used
	9	24V2	I	24 V DC	24 V DC power from FPWB1
	10	PRESS_RLS_REM2	I	0/24 V DC	TRRM: On/Off
	11	PRESS_RLS_REM1	I	0/24 V DC	TRRM: On/Off
	12	5V	I	5 V DC	5 V DC power from FPWB1
	13	PRESS_RLS_SENS	O	0/3.3 V DC	TRRS: On/Off
	14	DU_SENS	O	0/3.3 V DC	DUS2: On/Off
	15	BELT_JAM_SENS	-	-	Not used
	16	REG_BK_SENS1_S	-	-	Not used
	17	REG_BK_SENS1_P	-	-	Not used
	18	REG_BK_LED	-	-	Not used
YC2	1	GND	-	-	Ground
Connected to MP tray unit	2	MPF_LNG	I	0/3.3 V DC	MPPLSW: On/Off
	3	5V	O	5 V DC	5 V DC power to MPPLSW
	4	MPF_WID3	I	0/3.3 V DC	MPPWSW: On/Off
	5	MPF_WID2	I	0/3.3 V DC	MPPWSW: On/Off
	6	GND	-	-	Ground
	7	MPF_WID1	I	0/3.3 V DC	MPPWSW: On/Off
	8	GND	-	-	Ground
	9	MPF_TABLE	I	0/3.3 V DC	MPTSW: On/Off

Connector	Pin	Signal	I/O	Voltage	Description
YC3	1	LED_3.3V3	O	3.3 V DC	3.3 V DC power to MPPLSW
Connected to MP tray unit	2	GND	-	-	Ground
	3	MPF_PPR_SET	I	0/3.3 V DC	MPPS: On/Off
	4	GND	-	-	Ground
	5	MPF_LIFT_UP_SENS	I	0/3.3 V DC	MPLS1: On/Off
	6	5V	O	5 V DC	5 V DC power to MPLS1
	7	GND	-	-	Ground
	8	MPF_LIFT_DOWN_SENS	I	0/3.3 V DC	MPLS2: On/Off
	9	5V	O	5 V DC	5 V DC power to MPLS1
	10	GND	-	-	Ground
	11	MPF_JAM_SENS	I	0/3.3 V DC	MPFS: On/Off
	12	5V	O	5 V DC	5 V DC power to MPFS
	13	MPF_CL_REM	O	0/24 V DC	MPPFCL: On/Off
	14	24V2	O	24 V DC	24 V DC power to MPPFCL
	15	MPF_LIFT_DR_A	O	0/24 V DC	MPLM: On/Off
	16	MPF_LIFT_DR_B	O	0/24 V DC	MPLM: On/Off
YC7	1	24V2	O	24 V DC	24 V DC power to DUCL2
Connected to duplex clutch 2[*1], duplex cover switch and duplex motor 2[*2] ([*1]:30ppm/ 35ppm model only [*2]:45ppm/ 55ppm model only)	2	DU_CL2_REM	O	0/24 V DC	DUCL2: On/Off
	3	DU_OPEN	I	0/3.3 V DC	DUCSW: On/Off
	4	GND	-	-	Ground
	5	DU2_B/	O	0/24 V DC (pulse)	DUM2 drive control signal
	6	DU2_A/	O	0/24 V DC (pulse)	DUM2 drive control signal
	7	DU2_B	O	0/24 V DC (pulse)	DUM2 drive control signal
	8	DU2_A	O	0/24 V DC (pulse)	DUM2 drive control signal
YC9	1	GND	-	-	Ground
Connected to duplex sensor 2	2	DU_SENS	I	0/3.3 V DC	DUS2: On/Off
	3	5V	O	5 V DC	5 V DC power to DUS2

Connector	Pin	Signal	I/O	Voltage	Description
YC10	1	LOOP_SENS	I	0/3.3 V DC	LPS: On/Off
Connected to loop sensor	2	GND	-	-	Ground
	3	5V	O	5 V DC	5 V DC power to LPS
	4	3.3V	-	-	Not used
	5	REG_BK_LED	-	-	Not used
	6	GND	-	-	Not used
	7	REG_BK_SENS1_P	-	-	Not used
	8	REG_BK_SENS1_S	-	-	Not used
	9	GND	-	-	Not used
	10	BELT_JAM_SENS	-	-	Not used
	11	5V	-	-	Not used
YC11	1	GND	-	-	Ground
Connected to duplex sensor 1, eject fan motor1,2*2 and duplex clutch 1*1 (*1:30ppm/35ppm model only *2:45ppm/55ppm model only)	2	DU_ENTER_SENS	I	0/3.3 V DC	DUS1: On/Off
	3	5V	O	5 V DC	5 V DC power to DUS1
	4	EXIT_FAN_REM	O	0/24 V DC	EFM1: On/Off
	5	24V2	O	24 V DC	24 V DC power to EFM1
	6	EXIT_FAN_REM	O	0/24 V DC	EFM2: On/Off
	7	24V2	O	24 V DC	24 V DC power to EFM2
	8	24V2	O	24 V DC	24 V DC power to DUCL1
	9	DU_CL_UPPER_REM	O	0/24 V DC	DUCL1: On/Off
YC12	1	GND	-	-	Ground
Connected to feed PWB 1	2	GND	-	-	Ground
	3	MPF_TABLE	O	0/3.3 V DC	MPTSW: On/Off
	4	MPF_WID1	O	0/3.3 V DC	MPPWSW: On/Off
	5	MPF_WID2	O	0/3.3 V DC	MPPWSW: On/Off
	6	MPF_WID3	O	0/3.3 V DC	MPPWSW: On/Off
	7	MPF_LNG	O	0/3.3 V DC	MPPLSW: On/Off
	8	LED_3.3V3	I	3.3 V DC	3.3 V DC power from FPWB1
	9	MPF_PPR_SET	O	0/3.3 V DC	MPPS: On/Off
	10	MPF_LIFT_UP_SENS	O	0/3.3 V DC	MPLS1: On/Off
	11	MPF_LIFT_DOWN_SENS	O	0/3.3 V DC	MPLS2: On/Off
	12	MPF_JAM_SENS	O	0/3.3 V DC	MPFS: On/Off

Connector	Pin	Signal	I/O	Voltage	Description
YC12	13	MPF_CL_REM	I	0/24 V DC	MPPFCL: On/Off
Connected to feed PWB 1	14	24V2	I	24 V DC	24 V DC power from FPWB1
	15	MPF_LIFT_MOT_A	I	0/24 V DC	MPLM: On/Off
	16	MPF_LIFT_MOT_B	I	0/24 V DC	MPLM: On/Off
	17	24V2	-	-	Not used
	18	ID_SOL_ACT	-	-	Not used
	19	GND	-	-	Not used
	20	GND	-	-	Not used
YC13	1	3.3V	I	3.3 V DC	3.3 V DC power from FPWB1
Connected to feed PWB 1	2	LOOP_SENS	O	0/3.3 V DC	LPS: On/Off
	3	EDGE_FAN_REM	I	0/24 V DC	FUFM: On/Off
	4	DU1_A	I	0/24 V DC (pulse)	DUM1 drive control signal
	5	DU1_B	I	0/24 V DC (pulse)	DUM1 drive control signal
	6	DU1_A/	I	0/24 V DC (pulse)	DUM1 drive control signal
	7	DU1_B/	I	0/24 V DC (pulse)	DUM1 drive control signal
	8	GND	-	-	Ground
	9	DU_CL_UPPER_REM	I	0/24 V DC	DUCL1: On/Off
	10	24V2	I	24 V DC	24 V DC power from FPWB1
	11	EXIT_FAN	I	0/24 V DC	EFM: On/Off
	12	DU_ENTER_SENS	O	0/3.3 V DC	DUS1: On/Off
YC14	1	GND	-	-	Ground
Connected to transfer release sensor and transfer release motor	2	PRESS_RLS_SENS	I	0/3.3 V DC	TRRS: On/Off
	3	NC	-	-	Not used
	4	5V	O	5 V DC	5 V DC power to TRRS
	5	PRESS_RLS_REM1	O	0/24 V DC	TRRM: On/Off
	6	PRESS_RLS_REM2	O	0/24 V DC	TRRM: On/Off

Connector	Pin	Signal	I/O	Voltage	Description
YC16	1	DU1_B/	O	0/24 V DC (pulse)	DUM1 drive control signal
Connected to duplex motor 1* and fuser fan motor 1/2 (*:45ppm/ 55ppm model only)	2	DU1_A/	O	0/24 V DC (pulse)	DUM1 drive control signal
	3	DU1_B	O	0/24 V DC (pulse)	DUM1 drive control signal
	4	DU1_A	O	0/24 V DC (pulse)	DUM1 drive control signal
	5	EDGE_FAN_REM	O	0/24 V DC	FUFM1: On/Off
	6	24V2	O	24 V DC	24 V DC power to FUFM1
	7	EDGE_FAN_REM	O	0/24 V DC	FUFM2: On/Off
	8	24V2	O	24 V DC	24 V DC power to FUFM2

2-3-11 Motor control PWB

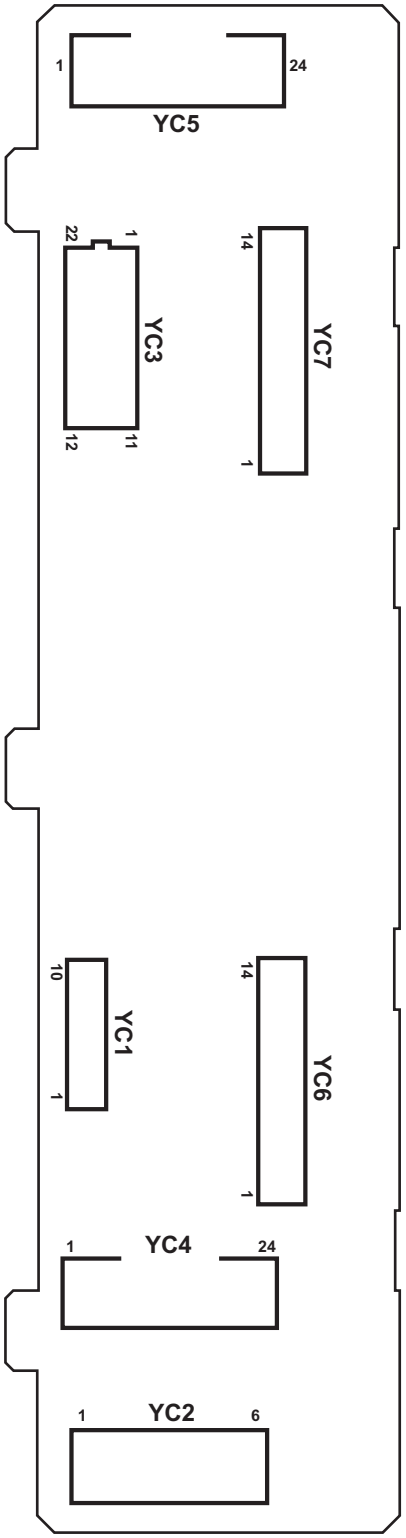

Figure 2-3-12 Motor control PWB silk-screen diagram

Connector	Pin	Signal	I/O	Voltage	Description
YC2	1	PGND	-	-	Ground
Connected to power source PWB	2	PGND	-	-	Ground
	3	PGND	-	-	Ground
	4	24V1	I	24 V DC	24 V DC power from PSPWB
	5	24V1	I	24 V DC	24 V DC power from PSPWB
	6	24V1	I	24 V DC	24 V DC power from PSPWB
YC3	1	BLT_SPEED	I	0/3.3 V DC	TBLS: On/Off
Connected to engine PWB	2	EMERGENCY	I	0/3.3 V DC	MCPWB control signal
	3	ENG_RDY	O	0/3.3 V DC	MCPWB ready signal
	4	ENG_SDO	O	0/3.3 V DC (pulse)	MCPWB serial communication data signal
	5	ENG_SEL	I	0/3.3 V DC	MCPWB select signal
	6	ENG_SDI	I	0/3.3 V DC (pulse)	MCPWB serial communication data signal
	7	ENG_CLK	I	0/3.3 V DC (pulse)	MCPWB clock signal
	8	BLT_FG	-	-	Not used
	9	MOT_ON	I	0/3.3 V DC	MCPWB control signal
	10	MOT_DATA_SET	I	0/3.3 V DC	MCPWB control signal
	11	BLT_REM	-	-	Not used
	12	BLT_VM	-	-	Not used
	13	BLT_BRAKE	-	-	Not used
	14	+5V	I	5 V DC	5 V DC power to MCPWB
	15	+5V	I	5 V DC	5 V DC power to MCPWB
	16	SGND	-	-	Ground
	17	SGND	-	-	Ground
YC4	1	DRM_C_CW/ CCW	O	0/24 V DC	DRM-C: On/Off
Connected to drum motor C (45ppm/ 55ppm model only)	2	DRM_Y_CW/ CCW	-	-	Not used
	3	DRM_C_LD	O	0/3.3 V DC	DRM-C control signal
	4	DRM_Y_LD	-	-	Not used
	5	DRM_C_CLK	O	0/3.3 V DC (pulse)	DRM-C clock signal
	6	DRM_Y_CLK	-	-	Not used
	7	DRM_C_Start/ Stop	O	0/3.3 V DC	DRM-C control signal
	8	DRM_Y_Start/ Stop	-	-	Not used

Connector	Pin	Signal	I/O	Voltage	Description
YC4	9	PGND	-	-	Ground
Connected to drum motor C (45ppm/ 55ppm model only)	10	PGND	-	-	Not used
	11	+24V1	O	24 V DC	24 V DC power to DRM-C
	12	+24V1	-	-	Not used
YC5	1	DRM_BK_CW/ CCW	O	0/24 V DC	DRM-K: On/Off
Connected to drum motor K/MCY*1/M*2 (*1:30ppm/ 35ppm model only *2:45ppm/ 55ppm model only)	2	DRM_M_CW/ CCW	O	0/24 V DC	DRM-M: On/Off
	3	DRM_BK_LD	O	0/3.3 V DC	DRM-K control signal
	4	DRM_M_LD	O	0/3.3 V DC	DRM-M control signal
	5	DRM_BK_CLK	O	0/3.3 V DC (pulse)	DRM-K clock signal
	6	DRM_M_CLK	O	0/3.3 V DC (pulse)	DRM-M clock signal
	7	DRM_BK_Start/ Stop	O	0/3.3 V DC	DRM-K control signal
	8	DRM_M_Start/ Stop	O	0/3.3 V DC	DRM-M control signal
	9	PGND	-	-	Ground
	10	PGND	-	-	Ground
	11	+24V1	O	24 V DC	24 V DC power to DRM-K
	12	+24V1	O	24 V DC	24 V DC power to DRM-M
YC7	1	DLP_CL_CW/ CCW	O	0/24 V DC	DEVM-MCY: On/Off
Connected to developer motor MCY/K	2	DLP_CL_LD	O	0/3.3 V DC	DEVM-MCY control signal
	3	DLP_CL_CLK	O	0/3.3 V DC (pulse)	DEVM-MCY clock signal
	4	DLP_CL_Start/ Stop	O	0/3.3 V DC	DEVM-MCY control signal
	5	PGND	-	-	Ground
	6	+24V1	O	24 V DC	24 V DC power to DEVM-MCY
	7	DLP_BK_CW/ CCW	O	0/24 V DC	DEVM-K: On/Off
	8	DLP_BK_LD	O	0/3.3 V DC	DEVM-K control signal
	9	DLP_BK_CLK	O	0/3.3 V DC (pulse)	DEVM-K clock signal
	10	DLP_BK_Start/ Stop	O	0/3.3 V DC	DEVM-K control signal
	11	PGND	-	-	Ground
	12	+24V1	O	24 V DC	24 V DC power to DEVM-K

2-3-12 LSU relay PWB

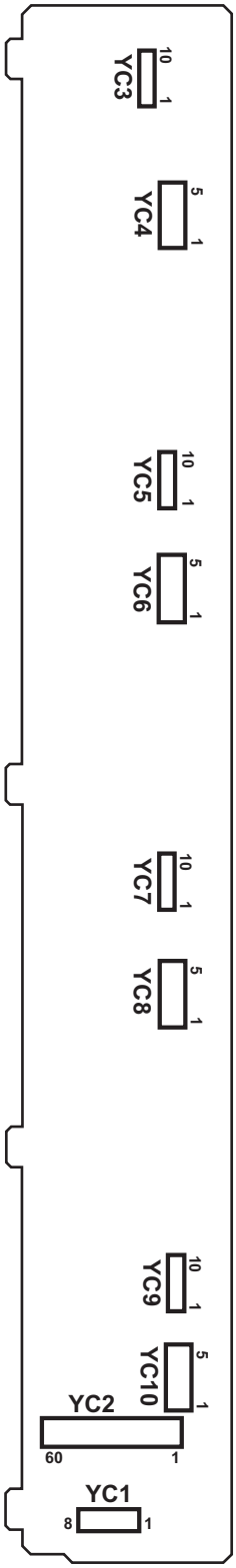

Figure 2-3-13 LSU relay PWB silk-screen diagram

Connector	Pin	Signal	I/O	Voltage	Description
YC1	1	+24V1	O	24 V DC	24 V DC power from PSPWB
Connected to power source PWB and engine PWB	2	+24V1	O	24 V DC	24 V DC power from PSPWB
	3	PGND	-	-	Ground
	4	PGND	-	-	Ground
	5	+5V	O	5 V DC	5 V DC power from EPWB
	6	+5V	O	5 V DC	5 V DC power from EPWB
	7	GND	-	-	Ground
	8	GND	-	-	Ground
	9	+3.3V	O	3.3 V DC	3.3 V DC power from EPWB
	10	PGND	-	-	Ground
YC2	1	SGND	-	-	Ground
Connected to engine PWB	2	CLK	I	0/3.3 V DC (pulse)	Clock signal
	3	SGND	-	-	Ground
	4	SDI	O	0/3.3 V DC (pulse)	Serial communication data signal
	5	SGND	-	-	Ground
	6	SDO	I	0/3.3 V DC (pulse)	Serial communication data signal
	7	SGND	-	-	Ground
	8	MSET_N	I	0/3.3 V DC	Control signal
	9	SGND	-	-	Ground
	10	LDD_CS Y	I	0/3.3 V DC	APCPWB-Y control signal
	11	EEPROM CS Y	I/O	0/3.3 V DC (pulse)	APCPWB-Y EEPROM data signal
	12	LDD_CS C	I	0/3.3 V DC	APCPWB-C control signal
	13	EEPROM CS C	I/O	0/3.3 V DC (pulse)	APCPWB-C EEPROM data signal
	14	LDD_CS M	I	0/3.3 V DC	APCPWB-M control signal
	15	EEPROM CS M	I/O	0/3.3 V DC (pulse)	APCPWB-M EEPROM data signal
	16	LDD_CS 2 Bk	I	0/3.3 V DC	APCPWB-K control signal
	17	EEPROM CS 2 Bk	I/O	0/3.3 V DC (pulse)	APCPWB-K EEPROM data signal
	18	LDD_CS 1 Bk	I	0/3.3 V DC	APCPWB-K control signal
	19	EEPROM CS 1 Bk	I/O	0/3.3 V DC (pulse)	APCPWB-K EEPROM data signal
	20	SGND	-	-	Ground
	21	INT_ST Y	I	0/3.3 V DC	APCPWB-Y control signal
	22	PALA_SIG P0 Y	I	0/3.3 V DC	APCPWB-Y control signal
	23	PALA_SIG P1 Y	I	0/3.3 V DC	APCPWB-Y control signal
	24	PALA_SIG P2 Y	I	0/3.3 V DC	APCPWB-Y control signal
	25	GAIN FIX Y	I	0/3.3 V DC	APCPWB-Y control signal
	26	SGND	-	-	Ground

Connector	Pin	Signal	I/O	Voltage	Description
YC2	27	DATA_2N_Y(LVDS)	I	0/3.3 V DC (pulse)	Video data signal Y (N)
Connected to engine PWB	28	DATA_2P_Y(LVDS)	I	0/3.3 V DC (pulse)	Video data signal Y (P)
	29	SGND	-	-	Ground
	30	INT_ST C	I	0/3.3 V DC	APCPWB-C control signal
	31	PALA_SIG P0 C	I	0/3.3 V DC	APCPWB-C control signal
	32	PALA_SIG P1 C	I	0/3.3 V DC	APCPWB-C control signal
	33	PALA_SIG P2 C	I	0/3.3 V DC	APCPWB-C control signal
	34	GAIN FIX C	I	0/3.3 V DC	APCPWB-C control signal
	35	SGND	-	-	Ground
	36	DATA_2N_C(LVDS)	I	0/3.3 V DC (pulse)	Video data signal C (N)
	37	DATA_2P_C(LVDS)	I	0/3.3 V DC (pulse)	Video data signal C (P)
	38	SGND	-	-	Ground
	39	INT_ST M	I	0/3.3 V DC	APCPWB-M control signal
	40	PALA_SIG P0 M	I	0/3.3 V DC	APCPWB-M control signal
	41	PALA_SIG P1 M	I	0/3.3 V DC	APCPWB-M control signal
	42	PALA_SIG P2 M	I	0/3.3 V DC	APCPWB-M control signal
	43	GAIN FIX M	I	0/3.3 V DC	APCPWB-M control signal
	44	SGND	-	-	Ground
	45	DATA_2N_M(LVDS)	I	0/3.3 V DC (pulse)	Video data signal M (N)
	46	DATA_2P_M(LVDS)	I	0/3.3 V DC (pulse)	Video data signal M (P)
	47	SGND	-	-	Ground
	48	DATA_3NBk(LVDS)	I	0/3.3 V DC (pulse)	Video data signal K (N)
	49	DATA_3PBk(LVDS)	I	0/3.3 V DC (pulse)	Video data signal K (P)
	50	SGND	-	-	Ground
	51	DATA_4NBk(LVDS)	I	0/3.3 V DC (pulse)	Video data signal K (N)
	52	DATA_4PBk(LVDS)	I	0/3.3 V DC (pulse)	Video data signal K (P)
	53	SGND	-	-	Ground
	54	PALA_SIG P3_2Bk	I	0/3.3 V DC	APCPWB-K control signal

Connector	Pin	Signal	I/O	Voltage	Description
YC2	55	INT_ST 2 Bk	I	0/3.3 V DC	APCPWB-K control signal
Connected to engine PWB	56	INT_ST 1 Bk	I	0/3.3 V DC	APCPWB-K control signal
	57	PALA_SIG P0 Bk	I	0/3.3 V DC	APCPWB-K control signal
	58	PALA_SIG P1 Bk	I	0/3.3 V DC	APCPWB-K control signal
	59	PALA_SIG P2 Bk	I	0/3.3 V DC	APCPWB-K control signal
	60	GAIN FIX Bk	I	0/3.3 V DC	APCPWB-K control signal
	61	SGND	-	-	Ground
	62	DATA_2NBk(LVDS)	I	0/3.3 V DC (pulse)	Video data signal K (N)
	63	DATA_2PBk(LVDS)	I	0/3.3 V DC (pulse)	Video data signal K (P)
	64	SGND	-	-	Ground
YC3	1	SGND	-	-	Ground
Connected to engine PWB	2	BD Y	O	0/3.3 V DC (pulse)	Horizontal synchronization signal Y
	3	LSU_TH Y	O	Analog	LSU thermistor Y detection signal
	4	CUALM Y	O	0/3.3 V DC	APCPWB-Y alarm signal
	5	PALA_SIG P3 Y	I	0/3.3 V DC	APCPWB-Y control signal
	6	PALA_SIG P4 Y	I	0/3.3 V DC	APCPWB-Y control signal
	7	SGND	-	-	Ground
	8	SDCLK Y	I	0/3.3 V DC (pulse)	APCPWB-Y clock signal
	9	SGND	-	-	Ground
	10	DATA_1N_Y(LVDS)	I	0/3.3 V DC (pulse)	Video data signal Y (N)
	11	DATA_1P_Y(LVDS)	I	0/3.3 V DC (pulse)	Video data signal Y (P)
	12	SGND	-	-	Ground
	13	REM Y	I	0/24 V DC	PM-Y: On/Off
	14	LOCK Y	O	0/3.3 V DC	PM-Y lock signal
	15	CLK Y	I	0/3.3 V DC (pulse)	PM-Y clock signal
	16	SGND	-	-	Ground
	17	BD C	O	0/3.3 V DC (pulse)	Horizontal synchronization signal C
	18	LSU_TH C	O	Analog	LSU thermistor C detection signal
	19	CUALM C	O	0/3.3 V DC	APCPWB-C alarm signal
	20	PALA_SIG P3 C	I	0/3.3 V DC	APCPWB-C control signal
	21	PALA_SIG P4 C	I	0/3.3 V DC	APCPWB-C control signal
	22	SGND	-	-	Ground
	23	SDCLK C	I	0/3.3 V DC (pulse)	APCPWB-C clock signal
	24	SGND	-	-	Ground

Connector	Pin	Signal	I/O	Voltage	Description
YC3	25	DATA_1N_C(LVDS)	I	0/3.3 V DC (pulse)	Video data signal C (N)
Connected to engine PWB	26	DATA_1P_C(LVDS)	I	0/3.3 V DC (pulse)	Video data signal C (P)
	27	SGND	-	-	Ground
	28	REM C	I	0/24 V DC	PM-C: On/Off
	29	LOCK C	O	0/3.3 V DC	PM-C lock signal
	30	CLK C	I	0/3.3 V DC (pulse)	PM-C clock signal
	31	SGND	-	-	Ground
	32	BD M	O	0/3.3 V DC (pulse)	Horizontal synchronization signal M
	33	LSU_TH M	O	Analog	LSU thermistor M detection signal
	34	CUALM M	O	0/3.3 V DC	APCPWB-M alarm signal
	35	PALA_SIG P3 M	I	0/3.3 V DC	APCPWB-M control signal
	36	PALA_SIG P4 M	I	0/3.3 V DC	APCPWB-M control signal
	37	SGND	-	-	Ground
	38	SDCLK M	I	0/3.3 V DC (pulse)	APCPWB-M clock signal
	39	SGND	-	-	Ground
	40	DATA_1N_M(LVDS)	I	0/3.3 V DC (pulse)	Video data signal M (N)
	41	DATA_1P_M(LVDS)	I	0/3.3 V DC (pulse)	Video data signal M (P)
	42	SGND	-	-	Ground
	43	REM M	I	0/24 V DC	PM-M: On/Off
	44	LOCK M	O	0/3.3 V DC	PM-M lock signal
	45	CLK M	I	0/3.3 V DC (pulse)	PM-M clock signal
	46	SGND	-	-	Ground
	47	BD Bk	O	0/3.3 V DC (pulse)	Horizontal synchronization signal K
	48	LSU_TH Bk	O	Analog	LSU thermistor K detection signal
	49	CUALM Bk	O	0/3.3 V DC	APCPWB-K alarm signal
	50	PALA_SIG P3 Bk	I	0/3.3 V DC	APCPWB-K control signal
	51	PALA_SIG P4 Bk	I	0/3.3 V DC	APCPWB-K control signal
	52	SGND	-	-	Ground
	53	SDCLK Bk	I	0/3.3 V DC (pulse)	APCPWB-K clock signal
	54	SGND	-	-	Ground
	55	DATA_1NBk(LVDS)	I	0/3.3 V DC (pulse)	Video data signal K (N)
	56	DATA_1PBk(LVDS)	I	0/3.3 V DC (pulse)	Video data signal K (P)

Connector	Pin	Signal	I/O	Voltage	Description
YC3	57	SGND	-	-	Ground
Connected to engine PWB	58	REM Bk	I	0/24 V DC	PM-K: On/Off
	59	LOCK Bk	O	0/3.3 V DC	PM-K lock signal
	60	CLK Bk	I	0/3.3 V DC (pulse)	PM-K clock signal
YC4	1	24V1	O	24 V DC	24 V DC power to PM-K
Connected to polygon motor K	2	PGND	-	-	Ground
	3	P REM Bk	O	0/24 V DC	PM-K: On/Off
	4	P LOCK Bk	I	0/3.3 V DC	PM-K lock signal
	5	P CLK Bk	O	0/3.3 V DC (pulse)	PM-K clock signal
YC5	1	SGND	-	-	Ground
Connected to APC PWB K	2	BD Bk	I	0/3.3 V DC (pulse)	Horizontal synchronization signal K
	3	LSU_TH Bk	I	Analog	LSU thermistor K detection signal
	4	PALA_SIG P3_2 Bk	-	-	Not used
	5	LDD_CS 2 Bk	-	-	Not used
	6	+5V	O	5 V DC	5 V DC power to APCPWB-K
	7	+5V	O	5 V DC	5 V DC power to APCPWB-K
	8	+5V	O	5 V DC	5 V DC power to APCPWB-K
	9	IDD_CS 1 Bk	O	0/3.3 V DC	APCPWB-K control signal
	10	SDI_1_Bk	I	0/3.3 V DC (pulse)	Serial communication data signal
	11	SDO_1_Bk	O	0/3.3 V DC (pulse)	Serial communication data signal
	12	CLK_1_Bk	O	0/3.3 V DC (pulse)	APCPWB-K clock signal
	13	EEPROM CS_1_0_Bk	I/O	0/3.3 V DC (pulse)	APCPWB-K EEPROM data signal
	14	MSET_N	O	0/3.3 V DC	APCPWB-K control signal
	15	CUALM Bk	I	0/3.3 V DC	APCPWB-K alarm signal
	16	INT_ST 2 Bk	O	0/3.3 V DC	APCPWB-K control signal
	17	INT_ST 1 Bk	O	0/3.3 V DC	APCPWB-K control signal
	18	PALA_SIG P0 Bk	O	0/3.3 V DC	APCPWB-K control signal
	19	PALA_SIG P1 Bk	O	0/3.3 V DC	APCPWB-K control signal
	20	PALA_SIG P2 Bk	O	0/3.3 V DC	APCPWB-K control signal
	21	PALA_SIG P3 Bk	O	0/3.3 V DC	APCPWB-K control signal
	22	PALA_SIG P4 Bk	O	0/3.3 V DC	APCPWB-K control signal
	23	SDCLK Bk	O	0/3.3 V DC (pulse)	APCPWB-K clock signal
	24	GAIN FIX Bk	O	0/3.3 V DC	APCPWB-K control signal
	25	DATA_1NBk(LVDS)	O	0/3.3 V DC (pulse)	Video data signal K (N)

Connector	Pin	Signal	I/O	Voltage	Description
YC5	26	DATA_1PBk(LVDS)	O	0/3.3 V DC (pulse)	Video data signal K (P)
Connected to APC PWB K	27	SGND	-	-	Ground
	28	DATA_2NBk(LVDS)	O	0/3.3 V DC (pulse)	Video data signal K (N)
	29	DATA_2PBk(LVDS)	O	0/3.3 V DC (pulse)	Video data signal K (P)
	30	SGND	-	-	Ground
YC7	1	24V	O	24 V DC	24 V DC power to PM-M
Connected to polygon motor M	2	PGND	-	-	Ground
	3	P_REM M	O	0/24 V DC	PM-M: On/Off
	4	P_LOCK M	I	0/3.3 V DC	PM-M lock signal
	5	P_CLK M	O	0/3.3 V DC (pulse)	PM-M clock signal
YC8	1	SGND	-	-	Ground
Connected to APC PWB M	2	BD M	I	0/3.3 V DC (pulse)	Horizontal synchronization signal M
	3	LSU_TH M	I	Analog	LSU thermistor M detection signal
	4	-	-	-	Not used
	5	-	-	-	Not used
	6	+5V	O	5 V DC	5 V DC power to APCPWB-M
	7	+5V	O	5 V DC	5 V DC power to APCPWB-M
	8	+5V	O	5 V DC	5 V DC power to APCPWB-M
	9	LDD_CS M	O	0/3.3 V DC	APCPWB-M control signal
	10	SDI M	I	0/3.3 V DC (pulse)	Serial communication data signal
	11	SDO M	O	0/3.3 V DC (pulse)	Serial communication data signal
	12	CLK M	O	0/3.3 V DC (pulse)	APCPWB-M clock signal
	13	EEPROM CS M	I/O	0/3.3 V DC (pulse)	APCPWB-M EEPROM data signal
	14	MSET_N	O	0/3.3 V DC	APCPWB-M control signal
	15	CUALM M	I	0/3.3 V DC	APCPWB-M alarm signal
	16	-	-	-	-
	17	INT_ST M	O	0/3.3 V DC	APCPWB-M control signal
	18	PALA_SIG P0 M	O	0/3.3 V DC	APCPWB-M control signal
	19	PALA_SIG P1 M	O	0/3.3 V DC	APCPWB-M control signal
	20	PALA_SIG P2 M	O	0/3.3 V DC	APCPWB-M control signal
	21	PALA_SIG P3 M	O	0/3.3 V DC	APCPWB-M control signal
	22	PALA_SIG P4 M	O	0/3.3 V DC	APCPWB-M control signal
	23	SDCLK M	O	0/3.3 V DC (pulse)	APCPWB-M clock signal

Connector	Pin	Signal	I/O	Voltage	Description
YC8	24	GAIN FIX M	O	0/3.3 V DC	APCPWB-M control signal
Connected to APC PWB M	25	DATA_1N_M(LVDS)	O	0/3.3 V DC (pulse)	Video data signal M (N)
	26	DATA_1P_M(LVDS)	O	0/3.3 V DC (pulse)	Video data signal M (P)
	27	SGND	-	-	Ground
	28	DATA_2N_M(LVDS)	O	0/3.3 V DC (pulse)	Video data signal M (N)
	29	DATA_2P_M(LVDS)	O	0/3.3 V DC (pulse)	Video data signal M (P)
	30	SGND	-	-	Ground
YC9	1	+24V	O	24 V DC	24 V DC power to PM-C
Connected to polygon motor C	2	PGND	-	-	Ground
	3	P_REM C	O	0/24 V DC	PM-C: On/Off
	4	P_LOCK C	I	0/3.3 V DC	PM-C lock signal
	5	P_CLK C	O	0/3.3 V DC (pulse)	PM-C clock signal
YC10	1	SGND	-	-	Ground
Connected to APC PWB C	2	BD C	I	0/3.3 V DC (pulse)	Horizontal synchronization signal C
	3	LSU_TH C	I	Analog	LSU thermistor C detection signal
	4	-	-	-	Not used
	5	-	-	-	Not used
	6	+5V	O	5 V DC	5 V DC power to APCPWB-C
	7	+5V	O	5 V DC	5 V DC power to APCPWB-C
	8	+5V	O	5 V DC	5 V DC power to APCPWB-C
	9	IDD_CS C	O	0/3.3 V DC	APCPWB-C control signal
	10	SDI_C	I	0/3.3 V DC (pulse)	Serial communication data signal
	11	SDO_C	O	0/3.3 V DC (pulse)	Serial communication data signal
	12	CLK_C	O	0/3.3 V DC (pulse)	APCPWB-C clock signal
	13	EEPROM CS O C	I/O	0/3.3 V DC (pulse)	APCPWB-C EEPROM data signal
	14	MSET_N	O	0/3.3 V DC	APCPWB-C control signal
	15	CUALM C	I	0/3.3 V DC	APCPWB-C alarm signal
	16	-	-	-	-
	17	INT_ST C	O	0/3.3 V DC	APCPWB-C control signal
	18	PALA_SIG P0 C	O	0/3.3 V DC	APCPWB-C control signal
	19	PALA_SIG P1 C	O	0/3.3 V DC	APCPWB-C control signal
	20	PALA_SIG P2 C	O	0/3.3 V DC	APCPWB-C control signal
	21	PALA_SIG P3 C	O	0/3.3 V DC	APCPWB-C control signal

Connector	Pin	Signal	I/O	Voltage	Description
YC10	22	PALA_SIG P4 C	O	0/3.3 V DC	APCPWB-C control signal
Connected to APC PWB C	23	SDCLK C	O	0/3.3 V DC (pulse)	APCPWB-C clock signal
	24	GAIN FIX C	O	0/3.3 V DC	APCPWB-C control signal
	25	DATA_1N_C(LVDS)	O	0/3.3 V DC (pulse)	Video data signal C (N)
	26	DATA_1P_C(LVDS)	O	0/3.3 V DC (pulse)	Video data signal C (P)
	27	SGND	-	-	Ground
	28	DATA_2N_C(LVDS)	O	0/3.3 V DC (pulse)	Video data signal C (N)
	29	DATA_2P_C(LVDS)	O	0/3.3 V DC (pulse)	Video data signal C (P)
	30	SGND	-	-	Ground
YC11	1	+24V	O	24 V DC	24 V DC power to PM-Y
Connected to polygon motor Y	2	PGND	-	-	Ground
	3	P_REM Y	O	0/24 V DC	PM-Y: On/Off
	4	P_LOCK Y	I	0/3.3 V DC	PM-Y lock signal
	5	P_CLK Y	O	0/3.3 V DC (pulse)	PM-Y clock signal
YC12	1	SGND	-	-	Ground
Connected to APC PWB Y	2	BD Y	I	0/3.3 V DC (pulse)	Horizontal synchronization signal Y
	3	LSU_TH Y	I	Analog	LSU thermistor Y detection signal
	4	-	-	-	Not used
	5	-	-	-	Not used
	6	+5V	O	5 V DC	5 V DC power to APCPWB-Y
	7	+5V	O	5 V DC	5 V DC power to APCPWB-Y
	8	+5V	O	5 V DC	5 V DC power to APCPWB-Y
	9	LDD_CS Y	O	0/3.3 V DC	APCPWB-Y control signal
	10	SDI_Y	I	0/3.3 V DC (pulse)	Serial communication data signal
	11	SDO_Y	O	0/3.3 V DC (pulse)	Serial communication data signal
	12	CLK_Y	O	0/3.3 V DC (pulse)	APCPWB-Y clock signal
	13	EEPROM CS 0 Y	I/O	0/3.3 V DC (pulse)	APCPWB-Y EEPROM data signal
	14	MSET_N	O	0/3.3 V DC	APCPWB-Y control signal
	15	CUALM Y	I	0/3.3 V DC	APCPWB-Y alarm signal
	16	-	-	-	-
	17	INT_ST Y	O	0/3.3 V DC	APCPWB-Y control signal
	18	PALA_SIG P0 Y	O	0/3.3 V DC	APCPWB-Y control signal

Connector	Pin	Signal	I/O	Voltage	Description
YC12	19	PALA_SIG P1 Y	O	0/3.3 V DC	APCPWB-Y control signal
Connected to APC PWB Y	20	PALA_SIG P2 Y	O	0/3.3 V DC	APCPWB-Y control signal
	21	PALA_SIG P3 Y	O	0/3.3 V DC	APCPWB-Y control signal
	22	PALA_SIG P4 Y	O	0/3.3 V DC	APCPWB-Y control signal
	23	SDCLK Y	O	0/3.3 V DC (pulse)	APCPWB-Y clock signal
	24	GAIN FIX Y	O	0/3.3 V DC	APCPWB-Y control signal
	25	DATA_1N_Y(LVDS)	O	0/3.3 V DC (pulse)	Video data signal Y (N)
	26	DATA_1P_Y(LVDS)	O	0/3.3 V DC (pulse)	Video data signal Y (P)
	27	SGND	-	-	Ground
	28	DATA_2N_Y(LVDS)	O	0/3.3 V DC (pulse)	Video data signal Y (N)
	29	DATA_2P_Y(LVDS)	O	0/3.3 V DC (pulse)	Video data signal Y (P)
	30	SGND	-	-	Ground

2-4-1 Appendixes

(1) List of maintenance parts

Maintenance part name		Part No.	Alternative part No.
Name used in service manual	**Name used in parts list**		
Paper feed pulley			
45/55 ppm model	PULLEY FEED	302N406030	2N406030
30/35 ppm model	PULLEY FEED ASSY	302F906230	2F906230
Separation pulley			
45/55 ppm model	PULLEY RETARD	302N406040	2N406040
30/35 ppm model	RETARD ROLLER ASSY	302F909171	2F909171
Forwarding pulley			
45/55 ppm model	PULLEY FEED	302N406030	2N406030
30/35 ppm model	PULLEY PICKUP ASSY	302HN06080	2HN06080
Left registration roller			
45/55 ppm model	PARTS ROLLER REGIST H SP	302K994A00	2K994A00
30/35 ppm model	PARTS ROLLER REGIST L SP	302K994450	2K994450
Right registration roller	PARTS ROLLER REGIST R SP	302K994440	2K994440
Middle roller	PARTS ROLLER MIDDLE L SP	302LC94550	2LC94550
Paper conveying roller	PARTS ROLLER FEED LOW SP	302K994430	2K994430
Assist roller			
45/55 ppm model	PARTS ROLLER ASSIST SP	302K994420	2K994420
MP paper feed pulley	PULLEY, PAPER FEED	2AR07220	-
MP forwarding pulley	PULLEY, SEPARATION	2AR07230	
Contact glass for Metric	PARTS CONTACT-GLASS ASSY(C) SP	302K994040	2N994040
for Inch	PARTS CONTACT-GLASS ASSY(I) SP	302K994030	2K994030
LED mount	PARTS MOUNT LED ASSY SP	302N493040	2N493040
Original size sensor	SENSOR ORIGINAL	302H044110	2H044110

Maintenance part name		Part No.	Alternative part No.
Name used in service manual	**Name used in parts list**		
ISU			
45/55 ppm model	PARTS IMAGE SCANNER H SP	302N493120	2N493120
30/35 ppm model	PARTS IMAGE SCANNER L SP	302N693020	2N693020
Lower duplex roller			
45/55 ppm model	PARTS ROLLER DU LOW SP	302K994470	2K994470
30/35 ppm model	PARTS ROLLER DU LOW SP	302LK94060	2LK94060
Middle duplex roller	PARTS ROLLER DU MID SP	302K994480	2K994480
Upper duplex roller			
45/55 ppm model	PARTS ROLLER DU UP SP	302K994491	2K994491
30/35 ppm model	PARTS ROLLER DU UP SP	302LK94071	2LK94071
Eject roller B	PARTS ROLLER EXIT SP	302LC94350	2LC94350
Eject roller	PARTS ROLLER EXIT SP	302LH94290	2LH94290
Fan filter	PARTS FILTER FAN ASSY(V) SP	302LC94170	2LC94170
Developer filter	FILTER DLP COOLING	302LC33500	2LC33500
45/55 ppm model			
Transfer belt filter	PARTS FILTER BELT UNIT(V) SP	302LC94130	2LC94130
Toner filter	FILTER LEFT SIDE	302LC33370	2LC33370
45/55 ppm model			
Left filter	FILTER LEFT SIDE	302LC33370	2LC33370
45/55 ppm model			
Eject filter	FILTER TOP	302N433010	2N433010

(2) Maintenance kits

30 ppm/35 ppm model

Maintenance part name		Parts No.	Alternative part No.
Name used in service	**Name used in parts list**		
MK-8305A/Maintenance kit (600,000 images)	MK-8305A/MAINTENANCE KIT	1702LK0UN0	072LK0UN
Drum unit K	DK-8505 (K)	-	-
Developer unit K	DV-8305K	-	-
Transfer belt unit	TR-8505	-	-
Transfer roller	PARTS ROLLER SECONDLY TRANSFER SP	-	-
MK-8305B/Maintenance kit (600,000 imeges)	MK-8305B/MAINTENANCE KIT	1702LK0UN1	072LK0U1
Drum unit C	DK-8505 (C)	-	-
Drum unit M	DK-8505 (M)	-	-
Drum unit Y	DK-8505 (Y)	-	-
Developer unit C	DV-8305C	-	-
Developer unit M	DV-8305M	-	-
Developer unit Y	DV-8305Y	-	-
MK-8305C/Maintenance kit (300,000 imeges)	MK-8305C/MAINTENANCE KIT	1702LK0UN2	072LK0U2
Fuser unit	FK-8300	-	-
Eject filter	FILTER TOP		
Toner filter / Left filter	FILTER LEFT SIDE		

45 ppm/55 ppm model

Maintenance part name		Parts No.	Alternative part No.
Name used in service	**Name used in parts list**		
MK-8505A/Maintenance kit (600,000 images)	MK-8505A/MAINTENANCE KIT	1702LC0UN0	072LC0UN
Drum unit K	DK-8505 (K)	-	-
Developer unit K	DV-8505K	-	-
Transfer belt unit	TR-8505	-	-
Transfer roller	PARTS ROLLER SECONDLY TRANSFER SP	-	-
MK-8505B/Maintenance kit (600,000 images)	MK-8505B/MAINTENANCE KIT	1702LC0UN1	072LC0U1
Drum unit C	DK-8505 (C)	-	-
Drum unit M	DK-8505 (M)	-	-
Drum unit Y	DK-8505 (Y)	-	-
Developer unit C	DV-8505C	-	-
Developer unit M	DV-8505M	-	-
Developer unit Y	DV-8505Y	-	-
MK-8505C/Maintenance kit (300,000 imeges)	MK-8505C/MAINTENANCE KIT	1702LC0UN2	072LC0U2
Fuser unit	FK-8500	-	-
Eject filter	FILTER TOP		
Toner filter / Left filter	FILTER LEFT SIDE		

(3) Periodic maintenance procedures

CH: Check, CL: Clean, AD: Adjust, LU: Lubrication, RE: Replace

Section	Maintenance part/location	User call	Periodic maintenance (x1000 counts)				Points and cautions	Page
			300	600	900	1200		
Test copy and test print	Perform at the maximum copy size	CH AD	CH AD	CH AD	CH AD	CH AD	Test copy	

Section	Maintenance part/location	User call	Periodic maintenance (x1000 counts)				Points and cautions	Page
			300	600	900	1200		
Fuser section	Fuser unit	RE	RE	RE	RE	RE	Replace: MK-8305C/ MK8505C	P.1-5-68

Section	Maintenance part/location	User call	Periodic maintenance (x1000 counts)				Points and cautions	Page
			300	600	900	1200		
Transfer section	Transfer belt unit	RE	CH CL	RE	CH CL	RE	Replace: MK-8305A/ MK8505A	P.1-5-62
	Secondly transfer roller	-	-	RE	-	RE	Replace: MK-8305A/ MK8505A	P.1-5-66

Section	Maintenance part/location	User call	Periodic maintenance (x1000 counts)				Points and cautions	Page
			300	600	900	1200		
Devel-oper sec-tion	Developer unit K	RE	CH CL	RE	CH CL	RE	Vacuum./ Replace: MK-8305A/ MK8505A	P.1-5-57
	Developer unit C	RE	CH CL	RE	CH CL	RE	Vacuum./ Replace: MK-8305B/ MK8505B	P.1-5-57
	Developer unit M	RE	CH CL	RE	CH CL	RE	Vacuum./ Replace: MK-8305B/ MK8505B	P.1-5-57
	Developer unit Y	RE	CH CL	RE	CH CL	RE	Vacuum./ Replace: MK-8305B/ MK8505B	P.1-5-57

Section	Maintenance part/location	User call	Periodic maintenance (x1000 counts)				Points and cautions	Page
			300	600	900	1200		
Drum section	Drum unit K	RE	CH CL	RE	CH CL	RE	Vacuum./ Replace: MK-8305A/ MK8505A	P.1-5-57
	Drum unit C	RE	CH CL	RE	CH CL	RE	Vacuum./ Replace: MK-8305B/ MK8505B	P.1-5-57
	Drum unit M	RE	CH CL	RE	CH CL	RE	Vacuum./ Replace: MK-8305B/ MK8505B	P.1-5-57
	Drum unit Y	RE	CH CL	RE	CH CL	RE	Vacuum./ Replace: MK-8305B/ MK8505B	P.1-5-57
	Cleaning the inner unit	CH CL	CH CL	CH CL	CH CL	CH CL	Vacuum.	P.1-5-55

Section	Maintenance part/location	User call	Periodic maintenance (x1000 counts)				Points and cautions	Page
			150/ 300	450/ 600	750/ 900	1050/ 1200		
Paper feed , convey-ing sec-tion	Paper feed pulley	CH CL	CH RE	CH RE	CH RE	CH RE	Clean with alcohol or a dry cloth. CH: performing U901 and check feeding count: Tar-get to replace at 150K.	P.1-5-15 P.1-5-18
	Separation pulley	CH CL	CH RE	CH RE	CH RE	CH RE	Clean with alcohol or a dry cloth. CH: performing U901 and check feeding count: Tar-get to replace at 150K.	P.1-5-15 P.1-5-18
	Forwarding pulley	CH CL	CH RE	CH RE	CH RE	CH RE	Clean with alcohol or a dry cloth. CH: performing U901 and check feeding count: Tar-get to replace at 150K.	P.1-5-15 P.1-5-18
	Left registration roller	CL	- /CL	- /CL	- /CL	- /CL	Clean with alcohol or a dry cloth.	
	Right registration roller	CL	- /CL	- /CL	- /CL	- /CL	Clean with alcohol or a dry cloth.	
	Middle roller	CL	- /CL	- /CL	- /CL	- /CL	Clean with alcohol or a dry cloth.	
	Paper conveying roller	CL	- /CL	- /CL	- /CL	- /CL	Clean with alcohol or a dry cloth.	

Section	Maintenance part/location	User call	Periodic maintenance (x1000 counts)				Points and cautions	Page
			150/ 300	450/ 600	750/ 900	1050/ 1200		
Paper feed , convey-ing sec-tion	Assist roller	CL	- /CL	- /CL	- /CL	- /CL	Clean with alcohol or a dry cloth.	
	MP paper feed pulley	CH CL	CH RE	CH RE	CH RE	CH RE	Clean with alcohol or a dry cloth. CH: performing U901 and check feeding count: Tar-get to replace at 150K.	P.1-5-21
	MP forwarding pulley	CH CL	CH RE	CH RE	CH RE	CH RE	Clean with alcohol or a dry cloth. CH: performing U901 and check feeding count: Tar-	P.1-5-24
	Guides	CL	- /CL	- /CL	- /CL	- /CL	Clean with alcohol or a dry cloth.	P.2-4-11
	Cleaning the sep-arator	CL	- /CL	- /CL	- /CL	- /CL	Cleaning brush	P.2-4-11

Section	Maintenance part/location	User call	Periodic maintenance (x1000 counts)				Points and cautions	Page
			300	600	900	1200		
Eject, Duplex section	Lower duplex roller	CL	CL	CL	CL	CL	Clean with alcohol or a dry cloth.	
	Middle duplex roller	CL	CL	CL	CL	CL	Clean with alcohol or a dry cloth.	
	Upper duplex roller	CL	CL	CL	CL	CL	Clean with alcohol or a dry cloth.	
	Eject roller B	CL	CL	CL	CL	CL	Clean with alcohol or a dry cloth.	
	Eject roller	CL	CL	CL	CL	CL	Clean with alcohol or a dry cloth.	
	Upper and lower feedshift guide	CL	CL	CL	CL	CL	Clean with alcohol or a dry cloth. Clean the lib.	

Section	Maintenance part/location	User call	Periodic maintenance (x1000 counts)				Points and cautions	Page
			300	600	900	1200		
Scanner Optical section	Contact glass	CL	CL	CL	CL	CL	DP slit glass: CL dry cloth or alcohol wet cloth is strictly prohibited. When installing DP, CL with dry cloth.Contact glass for original: CL alcohol or dry cloth.(Face Side) Only when unusual image (line or stain) appear, wipe the back side with dry cloth after cleaning with alcohol only. (Back side)	
	Mirror A/ B	CL	-	-	-	-	Clean: air blow after dry cloth only when unusual image (line) arises.	
	ISU lens	CL	-	-	-	-	Clean: air blow after dry cloth only when unusual image (line) arises.	
	LED mount	CH RE	-	-	-	-	Replace if there are image problems.	
	RAIL ISU R/F	LU	-	-	-	-	Apply grease if abnormal sound and jitter image appears Optical rail grease PG-671 (P/N:60170000)	

Section	Maintenance part/location	User call	Periodic maintenance (x1000 counts)				Points and cautions	Page
			300	600	900	1200		
Outer, Cover	Outer Covers, Tray	CH CL	CL	CL	CL	CL	Clean with alcohol or a dry cloth.	

Section	Maintenance part/location	User call	Periodic maintenance (x1000 counts)				Points and cautions	Page
			300	600	900	1200		
Driving, Other	Fan filter	CL	CL	CL	CL	CL	Vacuum. 1pcs	P.1-5-116
	Developer filter*	CL	CL	CL	CL	CL	Vacuum. 1pcs	P.1-5-118
	Transfer belt filter	CL	CL	CL	CL	CL	Vacuum. 2pcs	P.1-5-117
	Toner filter* Left filter*	CL	CL	CL	CL	CL	Replace: MK-8305C/ MK8505C 2pcs	P.1-5-115
	Eject filter	CH RE	RE	RE	RE	RE	Replace: MK-8305C/ MK8505C 2pcs	P.1-5-114
	Each Clutches	CH RE	CH	CH	CH	CH	Check the image registration and paper feed conveying condition on paper feed conveying (registration) part.	
	Sensors	CH	CH	CH	CH	CH	Clean with alcohol or a dry cloth. (lighting part and light reception part.)	
	Image quality	CH AD	CH AD	CH AD	CH AD	CH AD	Check/ Adjust U464 (Calibration) U410 (Adjusting the half-tone automatically)	P.1-3-197 P.1-3-172

* : 45 ppm/55 ppm model only.

Section	Maintenance part/location	User call	Periodic maintenance (x1000 counts)				Points and cautions	Page
			300	600	900	1200		
Option	Duct unit	CL	CL	CL	CL	CL	Vacuum.	

* : Please do not use spray containing flamable gas for air-blow or air-brush purposes.

(4) Image adjustment after replacing the maintenance kit

Perform the following maintenance mode after replacing the maintenance kit (MK-8305A/ MK8505A, MK-8305B/ MK8505B, MK-8305C/ MK8505C):
Executable using preset-settings of the U952 maintenance mode workflow (see page P.1-3-233).

Maintenance kits	Maintenance mode
MK-A	U119/ U930/ U140*/ U469/ U127/ U464/ U469/ U412/ U464/ U410/ U251
MK-B	U119/ U930/ U140*/ U464/ U469/ U412/ U464/ U410/ U251
MK-C	U167/ U464/ U469/ U410/ U251

* : 45 ppm/55 ppm model only.

When the forwarding pulley, paper feed pulley or separation pulley is replaced, perform maintenance mode U903 (clearing the jam counter) (see page P.1-3-219).
Execute Maintenance Counter - Cassette - Counter Clear of U251 (Maintenance counter limits/clear) (see page P.1-3-152).

(5) Inner Cleaning

1. Cleaning the paper conveying plate

Procedure

1. Pull out the paper conveying unit.
2. Clean the side of the paper conveying plate, which paper runs through.

   * : Use a dry, soft cloth for cleaning.

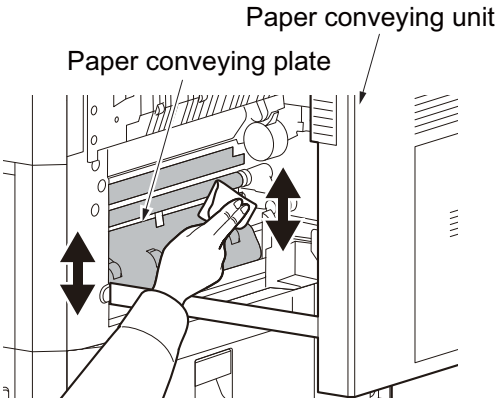

Figure 2-4-1

2. Cleaning the separator

Procedure

1. Pull out the paper conveying unit.
2. As shown in the figure, clean dirt from the separator by moving the brush from side to side along the separator.

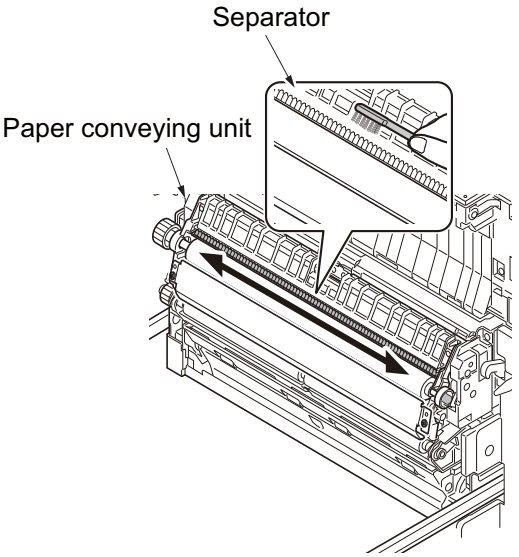

Figure 2-4-2

(6) Repetitive defects gauge

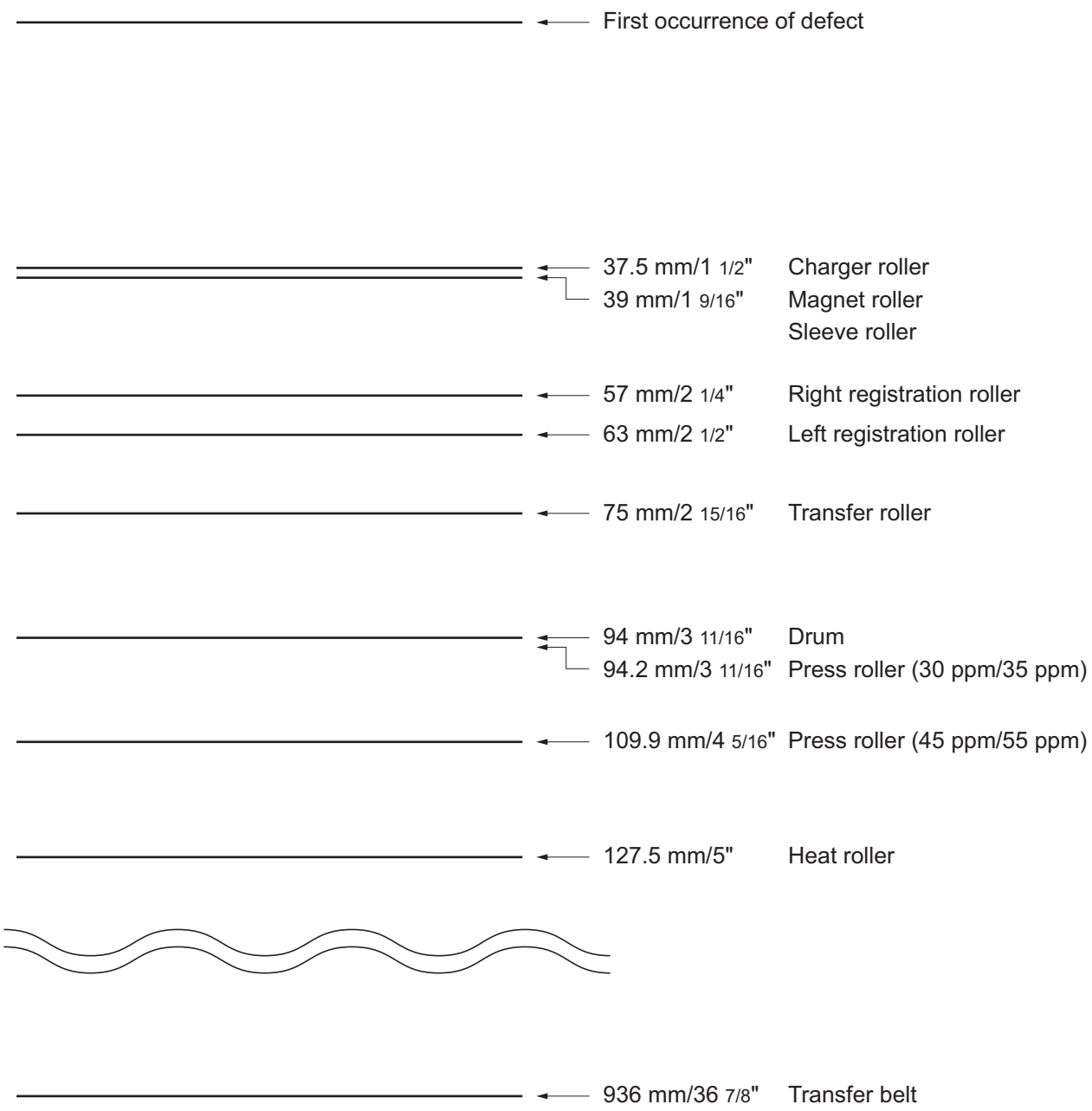

* : The repetitive marks interval may vary depending on operating conditions.

(7) Firmware environment commands

The printer maintains a number of printing parameters in its memory. There parameters may be changed permanently with the FRPO (Firmware RePrOgram) commands.
This section provides information on how to use the FRPO command and its parameters using examples.

Using FRPO commands for reprogramming firmware

The current settings of the FRPO parameters are listed as optional values on the service status page.

Note: Before changing any FRPO parameter, print out a service status page, so you will know the parameter values before the changes are made. To return FRPO parameters to their factory default values, send the FRPO INIT (FRPO-INITialize) command.(!R! FRPO INIT; EXIT;)

The FRPO command is sent to the printer in the following sequence:
!R! FRPO parameter, value; EXIT;
Example: Changing emulation mode to PCL6
!R! FRPO P1, 6; EXIT;

FRPO parameters

Item	FRPO	Setting values	Factory setting
Top margin	A1	Integer value in inches	0
	A2	Fraction value in 1/100 inches	0
Left margin	A3	Integer value in inches	0
	A4	Fraction value in 1/100 inches	0
Page length	A5	Integer value in inches	17
	A6	Fraction value in 1/100 inches	30
Page width	A7	Integer value in inches	17
	A8	Fraction value in 1/100 inches	30
Default pattern resolution	B8	0: 300 dpi 1: 600 dpi	0
Page orientation	C1	0: Portrait 1: Landscape	0
Default font No. *	C2	Middle two digits of power-up font	0
	C3	Last two digits of power-up font	0
	C5	First two digits of power-up font	0
PCL font switch	C8	0: HP compatibility mode 32: Conventional compatibility mode	0
Total host buffer size	H8	0 to 99 in units of the size defined by FRPO S5	5
Form feed time-out value	H9	Value in units of 5 seconds (1 to 99)	6(30s)
Duplex mode	N4	0: Off 1: Long edge binding 2: Short edge binding	0

Item	FRPO	Setting values	Factory setting
Sleep timer time-out time	N5	Value in units of 1 minute (1 to 240)	30 ppm:30 35 ppm:45 45 ppm/55 ppm:60
Ecoprint level	N6	0: Off 2: On	0
Default emulation mode	P1	6: PCL 6 9: KPDL	120V: 9 220-240V: 6
Carriage-return action	P2	0: Ignores 1: Carriage-return 2: Carriage-return + linefeed	1
Linefeed action	P3	0: Ignores 1: Linefeed 2: Linefeed + carriage-return	1
Automatic emulation switching	P4	0: AES disabled 1: AES enabled	120V: 1 220-240V: 0
Alternative emulation (For KPDL3)	P5	Same as the P1 values except that 9 is ignored.	6
Automatic emulation switching trigger	P7	0: Page eject commands 1: None 2: Page eject and prescribe EXIT commands 3: Prescribe EXIT commands 4: Formfeed (^L) commands 6: Prescribe EXIT and formfeed commands 10: Page eject commands; if AES fails, resolves to KPDL	120V: 11 220-240V: 10
Command recognition character	P9	ASCII code of 33 to 126	82 (R)
Default stacker	R0	1 (inner tray)	1

Item	FRPO	Setting values	Factory setting
Default paper size	R2	0: Size of the default paper cassette (See R4.) 1: Monarch (3-7/8 × 7-1/2 inches) 2: Business (4-1/8 × 9-1/2 inches) 3: International DL (11 × 22 cm) 4: International C5 (16.2 × 22.9 cm) 5: Executive (7-1/4 × 10-1/2 inches) 6: US Letter (8-1/2 × 11 inches) 7: US Legal (8-1/2 × 14 inches) 8: A4 (21.0 × 29.7 cm) 9: JIS B5 (18.2 × 25.7 cm) 10: A3 (29.7 ´ 42 cm) 11: B4 (25.7 ´ 36.4 cm) 12: US Ledger (11 ´ 17 inches) 13: ISO A5 14: A6 (10.5 × 14.8 cm) 15: JIS B6 (12.8 × 18.2 cm) 16: Commercial #9 (3-7/8 × 8-7/8 inches) 17: Commercial #6 (3-5/8 × 6-1/2 inches) 18: ISO B5 (17.6 × 25 cm) 19: Custom (11.7 × 17.7 inches) 20: 21: 22: 23: 24: 30: C4 (22.9 ´ 32.4 cm) 31: Hagaki (10 × 14.8 cm) 32: Ofuku-hagaki (14.8 × 20 cm) 33: Officio II 38: 39: 8K 40: 16K 42: 8.5 × 13.5 inches 50: Statement 51: Folio 52: Youkei 2 53: Youkei 4	0
Default cassette	R4	0: MP tray 1: Cassette 1 2: Cassette 2 3: Cassette 3 4: Cassette 4 5: Cassette 5 6: Cassette 6 7: Cassette 7	1
Sorter full action	S3	0: Stop operation with detecting tray-full 1: Switching to the eject-able destinations when bin becomes tray full	0

Item	FRPO	Setting values	Factory setting
A4/letter equation	S4	0: Off 1: On	1
Host buffer size	S5	0: 10 KB 1: 100 KB 2: 1024 KB	1
Wide A4	T6	0: Off 1: On	0
Line spacing *	U0	Lines per inch (integer value)	6
	U1	Lines per inch (decimal value)	0
Character spacing *	U2	Characters per inch (integer value)	10
	U3	Characters per inch (decimal value)	0
Country code	U6	0: US-ASCII 1: France 2: Germany 3: UK 4: Denmark 5: Sweden 6: Italy 7: Spain 8: Japan 9: US Legal 10: IBM PC-850 (Multilingual) 11: IBM PC-860 (Portuguese) 12: IBM PC-863 (Canadian French) 13: IBM PC-865 (Norwegian) 14: Norway 15: Denmark 2 16: Spain 2 17: Latin America	41
Code set at power up in daisywheel emulation	U7	0: Same as the default emulation mode (P1) 1: IBM 6: PCL	53
Font pitch for fixedpitch scalable font *	U8	Default font pitch (integer value)	10
	U9	Default font pitch (decimal value)	0
Font height for the default scalable font *	V0	Integer value in 100 points: 0 to 9	0
	V1	Integer value in points: 0 to 99	12
	V2	decimal value in 1/100 points: 0, 25, 50, 75	0
Default scalable font *	V3	Name of typeface of up to 32 characters, enclosed with single or double quotation marks	Courier

Item	FRPO	Setting values	Factory setting
Default weight (courier and letter Gothic)	V9	0: Courier = darkness Letter Gothic = darkness 1: Courier = regular Letter Gothic = darkness 4: Courier = darkness Letter Gothic = regular 5: Courier = regular Letter Gothic = regular	5
Color mode	W1	0: Black & white 1: Color	1
Gloss mode	W6	0: Low (normal) 1: High	0
Paper type for the MP tray	X0	1: Plain 2: Transparency 3: Preprinted 4: Label 5: Bond 6: Recycle 7: Vellum 9: Letterhead 10: Color 11: Prepunched 12: Envelope 13: Cardstock 14: Coated 16: Thick 17: High quality 18: IndexTabs 21 to 28: Custom1 to 8	1
Paper type for cassettes 1 and 2	X1 X2	1: Plain 3: Preprinted 5: Bond 6: Recycled 7: Vellum 9: Letterhead 10: Color 11: Prepunched 16: Thick 17: High quality 21 to 28: Custom1 to 8	1

Item	FRPO	Setting values	Factory setting
Paper type for optional cassettes 3 to 7	X3 X4 X5 X6 X10	1: Plain 3: Preprinted 5: Bond 6: Recycled 9: Letterhead 10: Color 11: Prepunched 17: High quality 21 to 28: Custom1 to 8	1
PCL paper source	X9	0: Paper selection depending on an escape sequence compatible with HP-LJ5Si. 2: Paper selection depending on an escape sequence compatible with HP-LJ8000.	0
Automatic continue for ‘Press GO’	Y0	0: Off 1: On	0
Automatic continue timer	Y1	Value in units of 5 seconds (1 to 99)	6 (30 s)
Error message for device error	Y3	0: Not detect 127: Detect	127
Duplex operation for specified paper type (Prepunched, Preprintedand Letterhead)	Y4	0: Off 1: On	0
Default operation for PDF direct printing	Y5	0: Enlarges or reduces the image to fit in the current paper size. Loads paper from the current paper cassette. 1: Through the image. Loads paper which is the same size as the image. 2: Enlarges or reduces the image to fit in the current paper size. Loads Letter, A4 size paper depending on the image size. 3: Through the image. Loads Letter, A4 size paper depending on the image size. 8: Through the image. Loads paper from the current paper cassette. 9: Through the image. Loads Letter, A4 size paper depending on the image size. 10: Enlarges or reduces the image to fit in the current paper size. Loads Letter, A4 size paper depending on the image size.	0
e-MPS error	Y6	0: Does not print the error report and display the error message. 1: Prints the error report. 2: Displays the error message. 3: Prints the error report and displays the error message.	3

*: Ignored in some emulation modes.

(8) Timing chart

1. Cassette1 paper feeding, Paper size A4, Simplex, Preset 1
2. Cassette1 paper feeding, Paper size A4, Simplex, Preset 3

30/35 ppm model

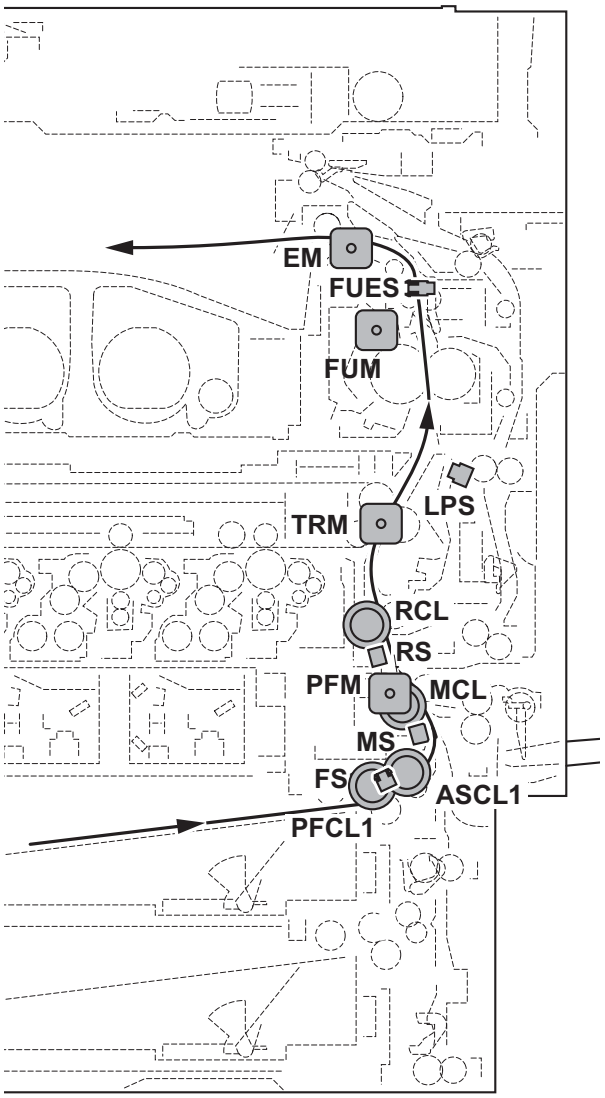

45/55 ppm model

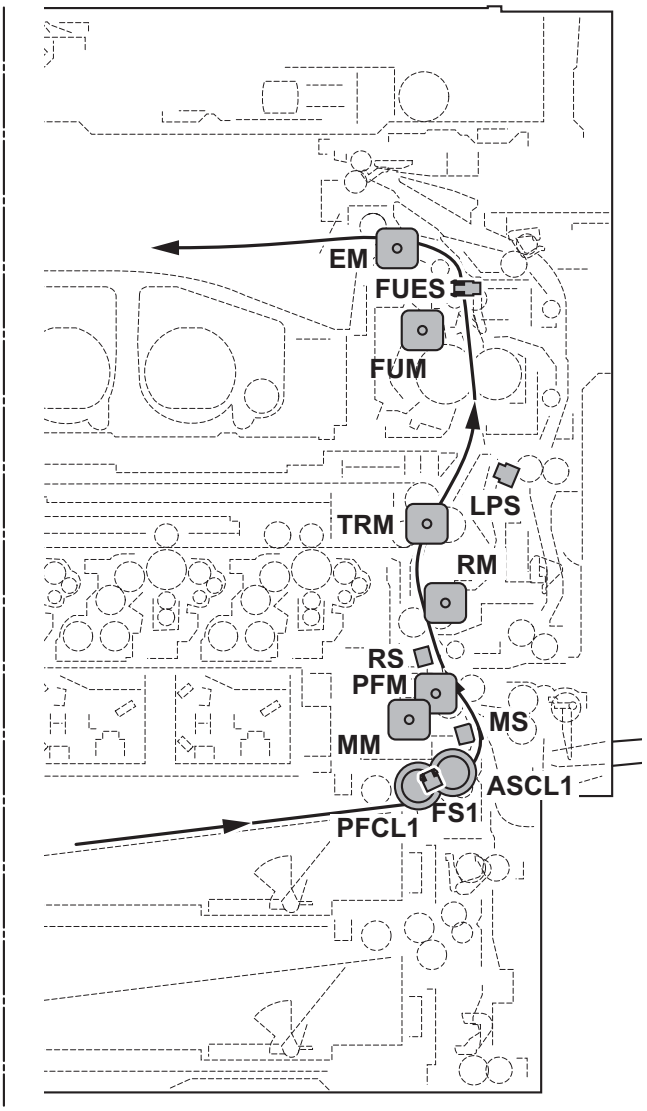

(1) Simplex_Preset 1_cassette1_A4

	NAME	I/O
1	Paper feed motor (PFM)/Transfer motor (TRM)	OUT
2	Paper feed clutch 1 (PFCL1)	OUT
3	Assist clutch 1 (ASCL1)	OUT
4	Feed sensor 1 (FS1)	IN
5	Middle motor (MM)/Middle clutch (MCL)*1	OUT
6	Middle sensor (MS)	IN
7	Registration sensor (RS)	IN
8	Registration motor (RM)/Registration clutch (RCL)*2	OUT
9	Fuser motor (FUM)	OUT
10	Loop sensor (LPS)	IN
11	Fuser eject sensor (FUES)	IN
12	Eject motor (EM)	OUT

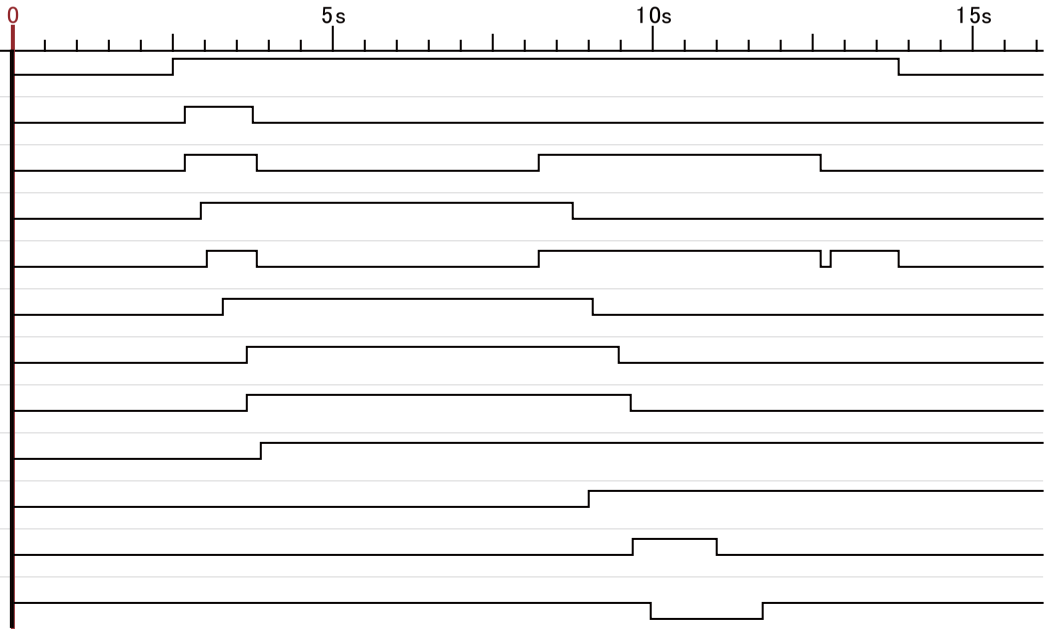

*1 Middle clutch (MCL): 30 / 35 ppm model, Middle motor (MM): 45 / 55 ppm model

*2 Registration clutch (RCL): 30 / 35 ppm model, Registration motor (RM): 45 / 55 ppm model

(2) Simplex_Preset 3_cassette1_A4

	NAME	I/O
1	Paper feed motor (PFM)/Transfer motor (TRM)	OUT
2	Paper feed clutch 1 (PFCL1)	OUT
3	Assist clutch 1 (ASCL1)	OUT
4	Feed sensor 1 (FS1)	IN
5	Middle motor (MM)/Middle clutch (MCL)*1	OUT
6	Middle sensor (MS)	IN
7	Registration sensor (RS)	IN
8	Registration motor (RM)/Registration clutch (RCL)*2	OUT
9	Fuser motor (FUM)	OUT
10	Loop sensor (LPS)	IN
11	Fuser eject sensor (FUES)	IN
12	Eject motor (EM)	OUT

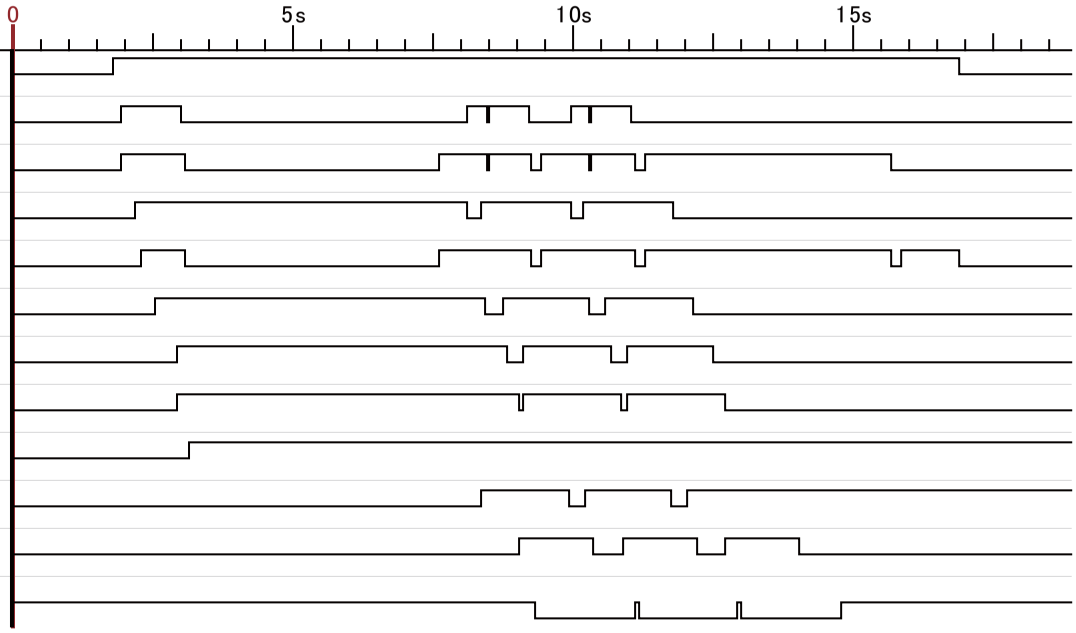

*1 Middle clutch (MCL): 30 / 35 ppm model, Middle motor (MM): 45 / 55 ppm model
*2 Registration clutch (RCL): 30 / 35 ppm model, Registration motor (RM): 45 / 55 ppm model
*3 Duplex clutch 1 (DUCL1): 30 / 35 ppm model, Duplex motor 1 (DUM1): 45 / 55 ppm model
*4 Duplex clutch 2 (DUCL2): 30 / 35 ppm model, Duplex motor 2 (DUM2): 45 / 55 ppm model

3. Cassette2 paper feeding, Paper size A4, Simplex, Preset 3

30/35 ppm model

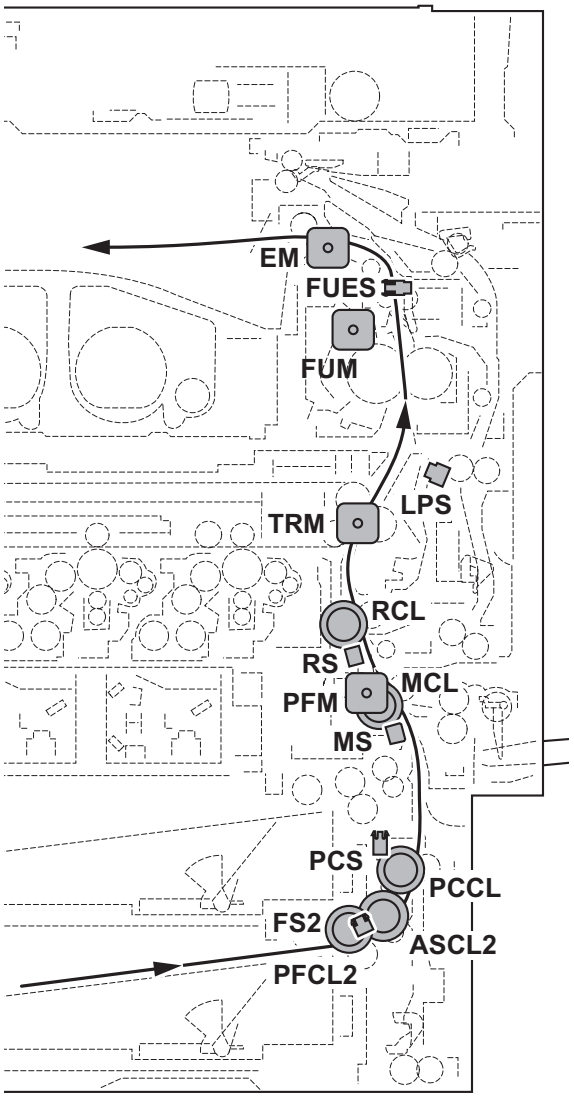

45/55 ppm model

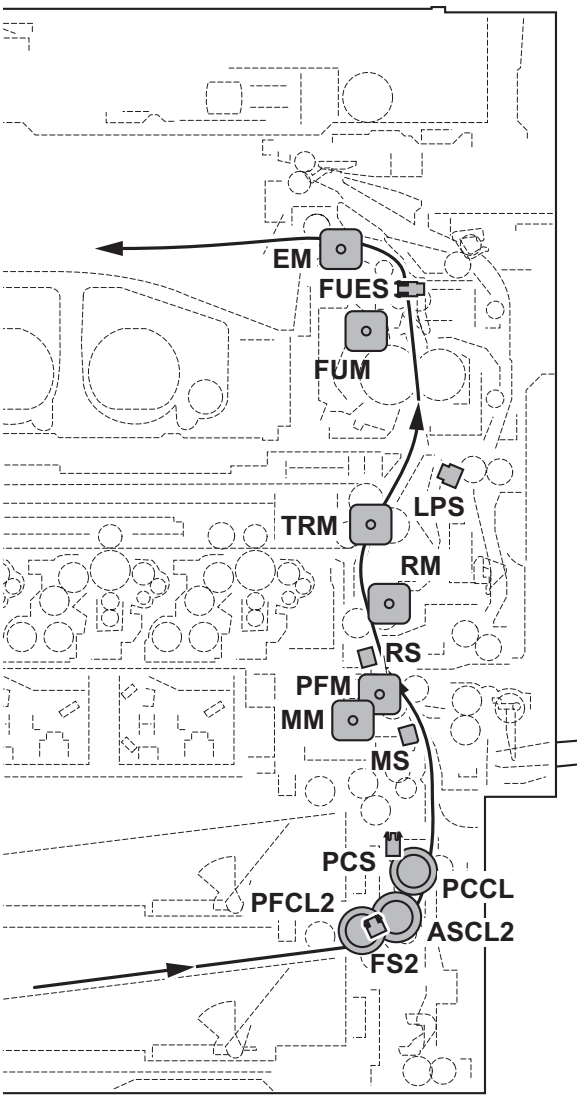

(3) Simplex_Preset 3_cassette2_A4

	NAME	I/O
1	Paper feed motor (PFM)/Transfer motor (TRM)	OUT
2	Paper feed clutch 2 (PFCL2)	OUT
3	Assist clutch 2 (ASCL2)	OUT
4	Feed sensor 2 (FS2)	IN
5	Paper conveying clutch (PCCL)	OUT
6	Paper conveying sensor (PCS)	IN
7	Middle motor (MM)/Middle clutch (MCL)*1	OUT
8	Middle sensor (MS)	IN
9	Fuser motor (FUM)	OUT
10	Registration sensor (RS)	IN
11	Registration motor (RM)/Registration clutch (RCL)*2	OUT
12	Loop sensor (LPS)	IN
13	Fuser eject sensor (FUES)	IN
14	Eject motor (EM)	OUT

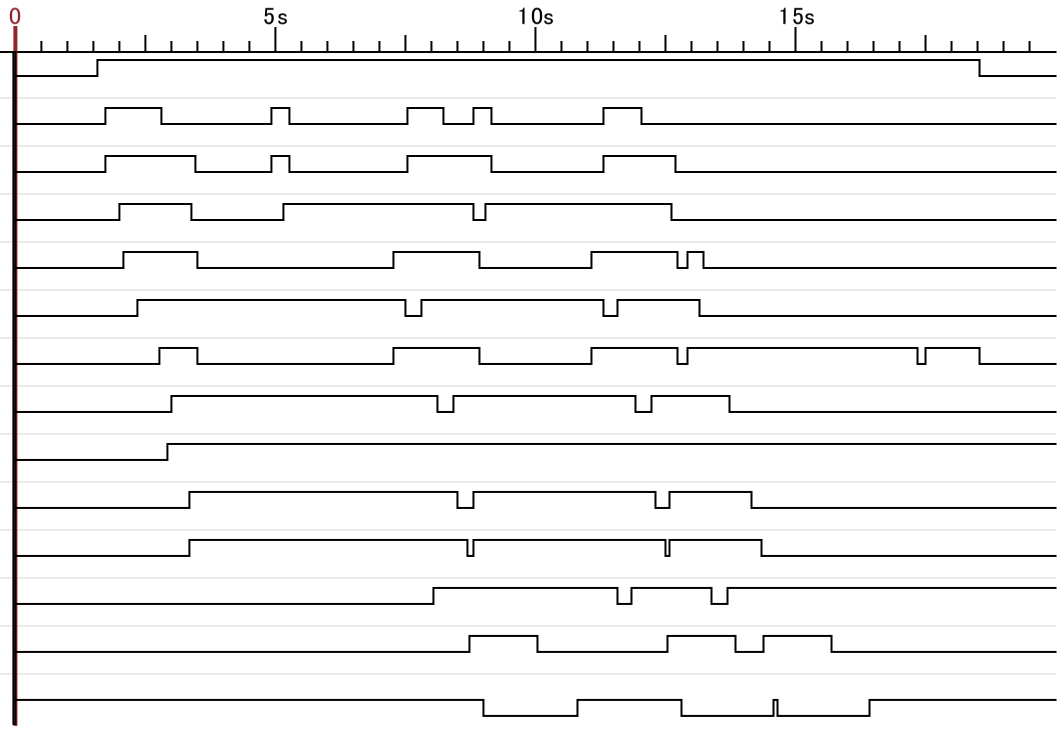

*1 Middle clutch (MCL): 30 / 35 ppm model, Middle motor (MM): 45 / 55 ppm model
*2 Registration clutch (RCL): 30 / 35 ppm model, Registration motor (RM): 45 / 55 ppm model

4. MPF paper feeding, Paper size A4, Simplex, Preset 1

30/35 ppm model

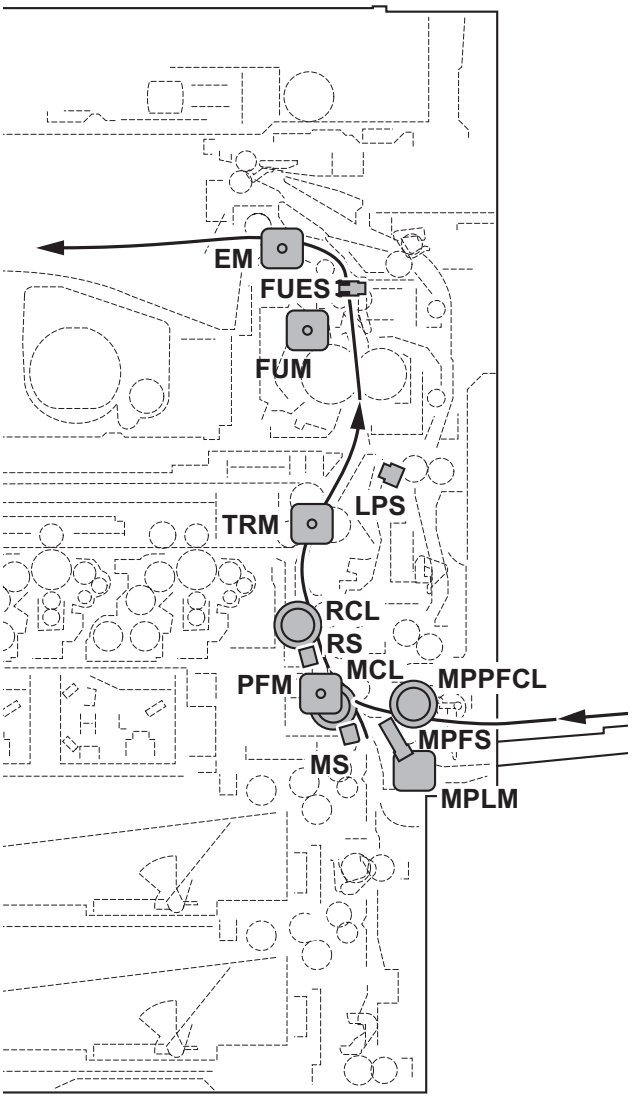

45/55 ppm model

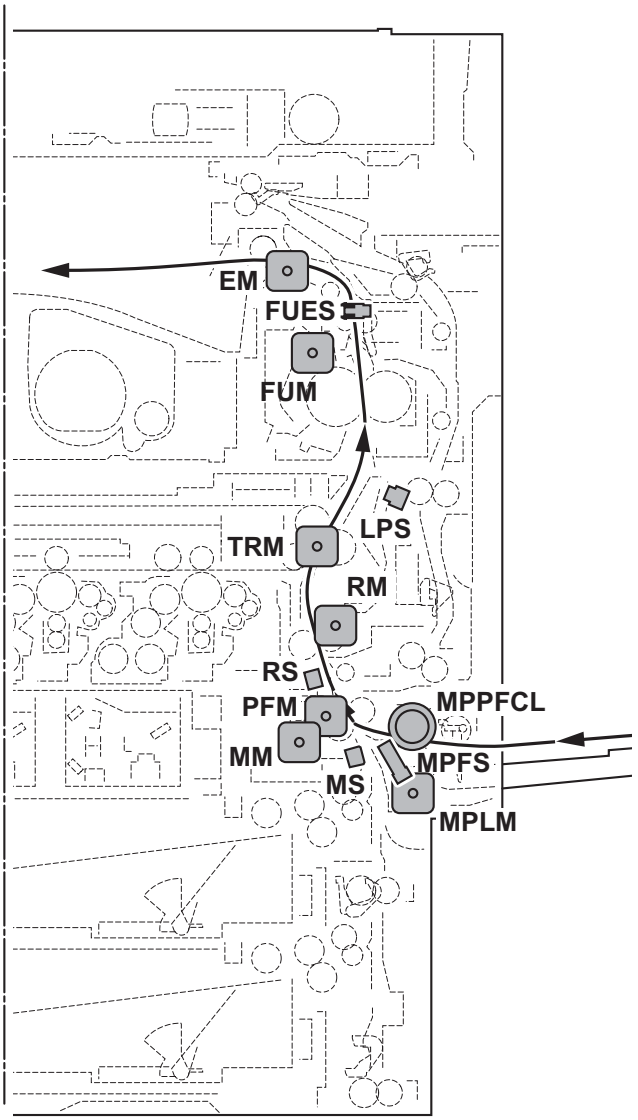

(4) Simplex_Preset 3_MPF_A4

	NAME	I/O
1	Paper feed motor (PFM)/Transfer motor (TRM)	OUT
2	MP lift motor (MPLM)	OUT
3	MP lift sensor 1 (MPLS1)	IN
4	MP paper feed clutch (MPPFCL)	OUT
5	MP feed sensor (MPFS)	IN
6	Middle motor (MM)/Middle clutch (MCL)*1	OUT
7	Registration sensor (RS)	IN
8	Fuser motor (FUM)	OUT
9	Registration motor (RM)/Registration clutch (RCL)*2	OUT
10	Loop sensor (LPS)	IN
11	Fuser eject sensor (FUES)	IN
12	Eject motor (EM)	OUT

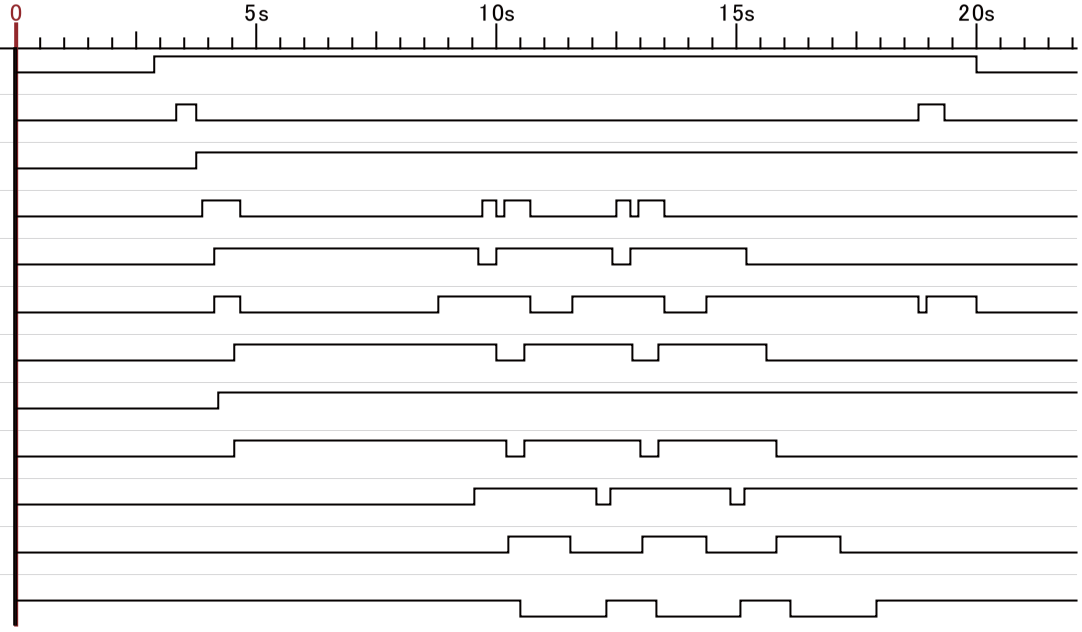

*1 Middle clutch (MCL): 30 / 35 ppm model, Middle motor (MM): 45 / 55 ppm model
*2 Registration clutch (RCL): 30 / 35 ppm model, Registration motor (RM): 45 / 55 ppm model

5. Cassette1 paper feeding, Paper size A4, Duplex, Preset 1
6. Cassette1 paper feeding, Paper size A4, Duplex, Preset 3

30/35 ppm model

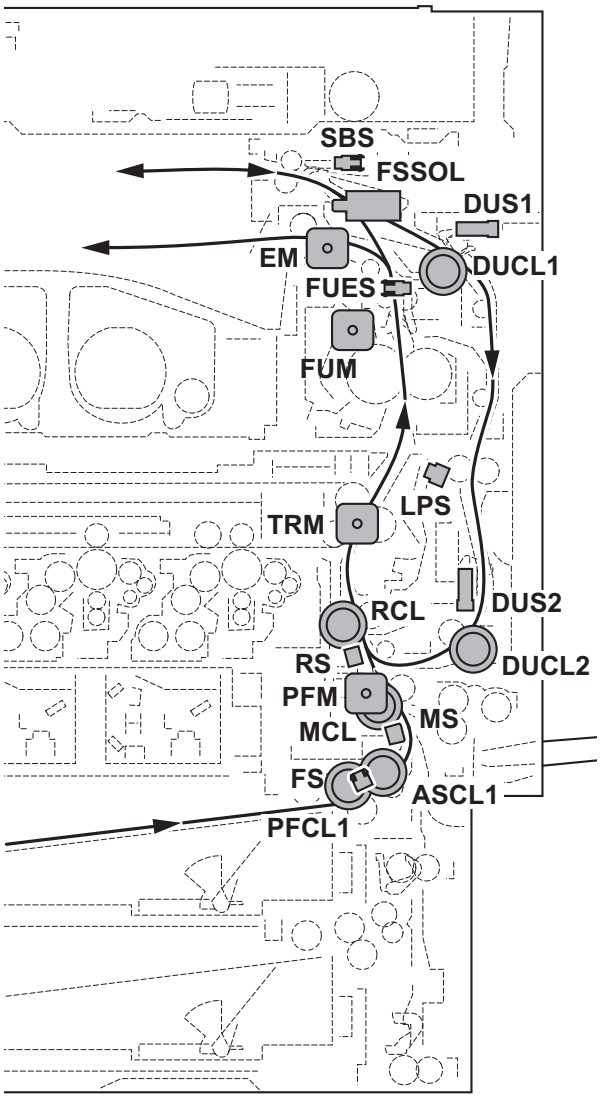

45/55 ppm model

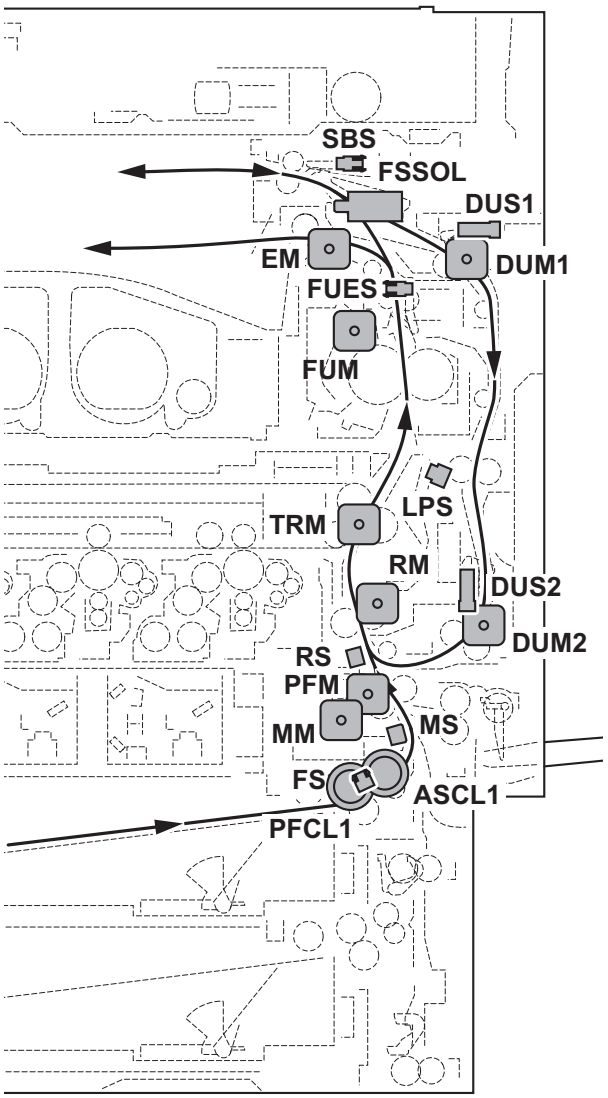

(5) Duplex_Preset 1_cassette1_A4

	NAME	I/O
1	Paper feed motor (PFM)/Transfer motor (TRM)	OUT
2	Paper feed clutch 1 (PFCL1)	OUT
3	Assist clutch 1 (ASCL1)	OUT
4	Feed sensor 1 (FS1)	IN
5	Middle motor (MM)/Middle clutch (MCL)*1	OUT
6	Middle sensor (MS)	IN
7	Registration sensor (RS)	IN
8	Registration motor (RM)/Registration clutch (RCL)*2	OUT
9	Fuser motor (FUM)	OUT
10	Loop sensor (LPS)	IN
11	Feedshift solenoid (FSSOL)	OUT
12	Fuser eject sensor (FUES)	IN
13	Eject motor (EM)	OUT
14	JS conveying motor (JSCM)	OUT
15	Switchback sensor (SBS)	IN
16	Duplex motor 1 (DUM1)/Duplex clutch 1 (DUCL1)*3	OUT
17	Duplex sensor 1 (DUS1)	IN
18	Duplex motor 2 (DUM2)/Duplex clutch 2 (DUCL2)*4	OUT
19	Duplex sensor 2 (DUS2)	IN

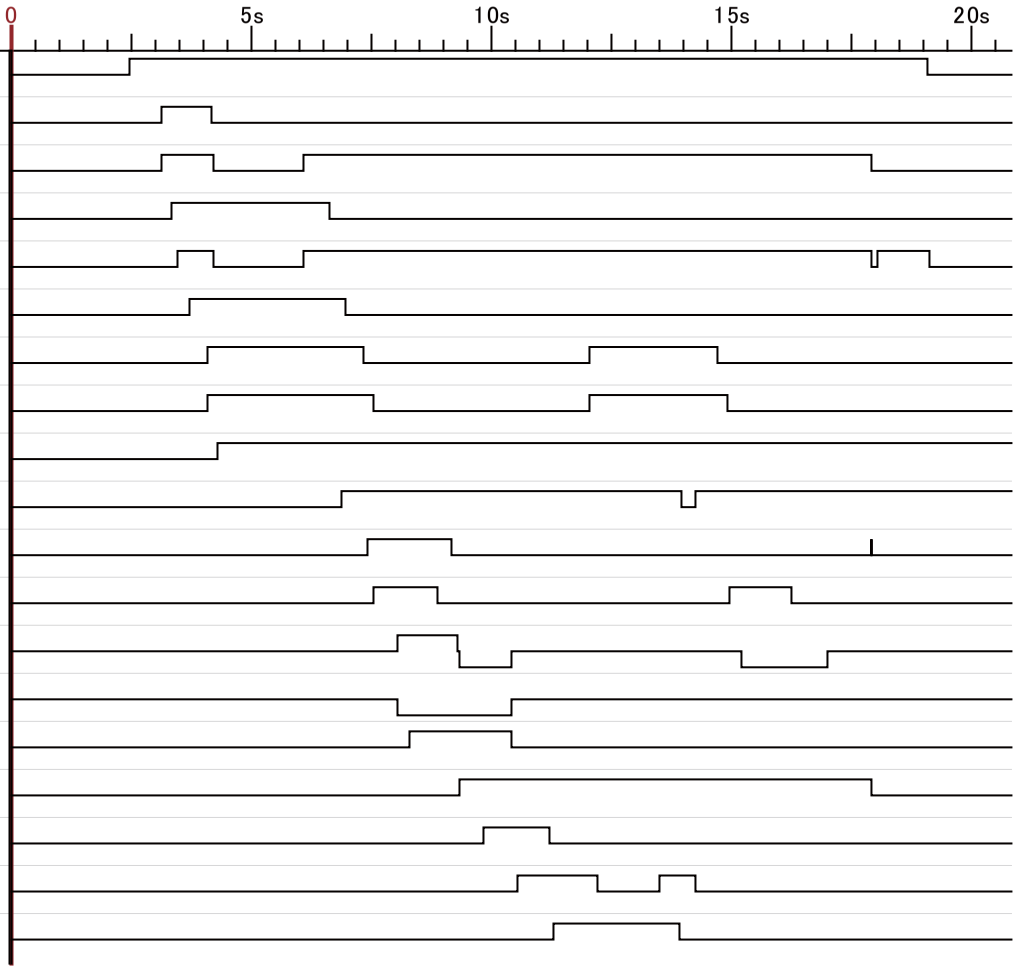

*1 Middle clutch (MCL): 30 / 35 ppm model, Middle motor (MM): 45 / 55 ppm model
*2 Registration clutch (RCL): 30 / 35 ppm model, Registration motor (RM): 45 / 55 ppm model
*3 Duplex clutch 1 (DUCL1): 30 / 35 ppm model, Duplex motor 1 (DUM1): 45 / 55 ppm model
*4 Duplex clutch 2 (DUCL2): 30 / 35 ppm model, Duplex motor 2 (DUM2): 45 / 55 ppm model

(6) Duplex_Preset 3_cassette1_A4

	NAME	I/O
1	Paper feed motor (PFM)/Transfer motor (TRM)	OUT
2	Paper feed clutch 1 (PFCL1)	OUT
3	Assist clutch 1 (ASCL1)	OUT
4	Feed sensor 1 (FS1)	IN
5	Middle motor (MM)/Middle clutch (MCL)*1	OUT
6	Middle sensor (MS)	IN
7	Registration sensor (RS)	IN
8	Registration motor (RM)/Registration clutch (RCL)*2	OUT
9	Fuser motor (FUM)	OUT
10	Loop sensor (LPS)	IN
11	Feedshift solenoid (FSSOL)	OUT
12	Fuser eject sensor (FUES)	IN
13	Eject motor (EM)	OUT
14	JS conveying motor (JSCM)	OUT
15	Switchback sensor (SBS)	IN
16	Duplex motor 1 (DUM1)/Duplex clutch 1 (DUCL1)*3	OUT
17	Duplex sensor 1 (DUS1)	IN
18	Duplex motor 2 (DUM2)/Duplex clutch 2 (DUCL2)*4	OUT
19	Duplex sensor 2 (DUS2)	IN

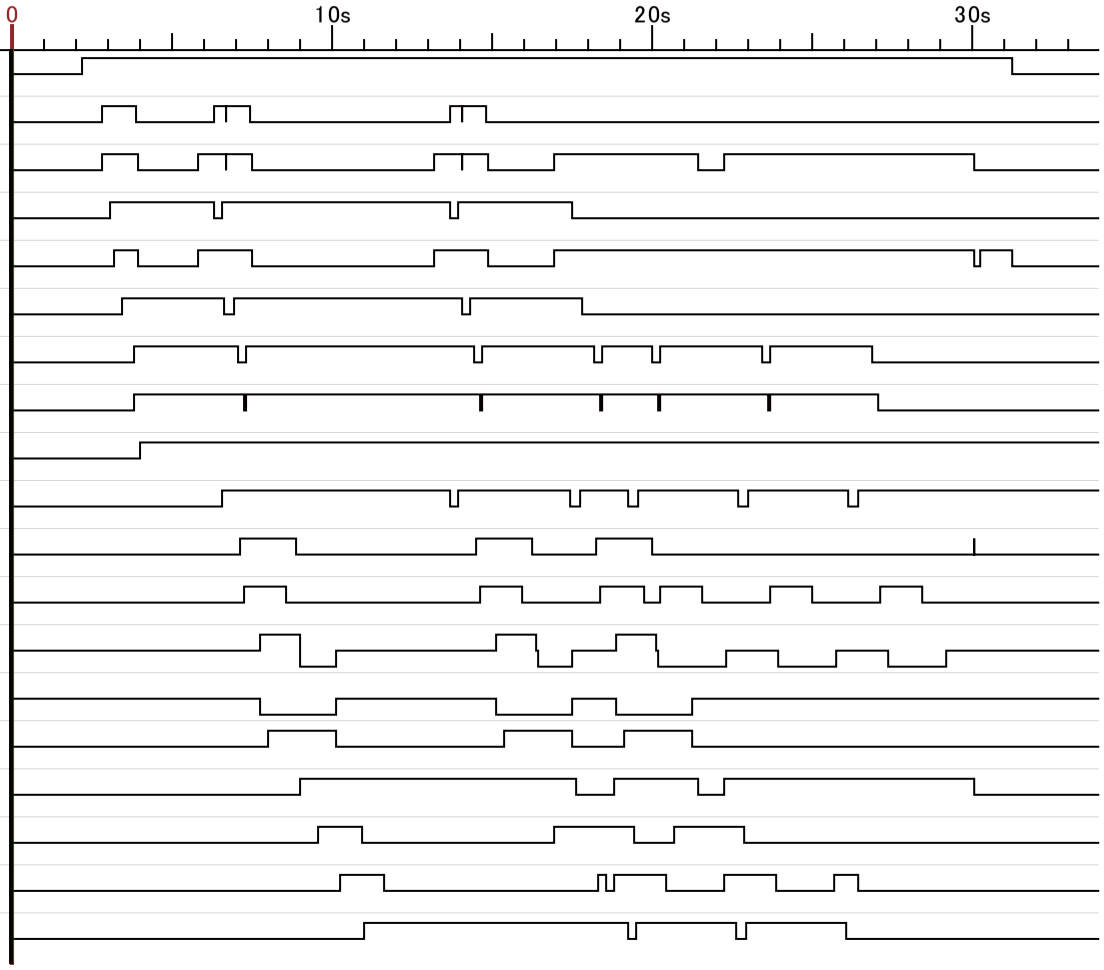

*1 Middle clutch (MCL): 30 / 35 ppm model, Middle motor (MM): 45 / 55 ppm model
*2 Registration clutch (RCL): 30 / 35 ppm model, Registration motor (RM): 45 / 55 ppm model
*3 Duplex clutch 1 (DUCL1): 30 / 35 ppm model, Duplex motor 1 (DUM1): 45 / 55 ppm model
*4 Duplex clutch 2 (DUCL2): 30 / 35 ppm model, Duplex motor 2 (DUM2): 45 / 55 ppm model

(9) Chart of image adjustment procedures

Adjusting order	Item	Image	Description	Maintenance mode		Original	Page	Remarks
				Item No.	Mode			
1	Adjusting the magnification in the auxiliary scanning direction (printing adjustment)	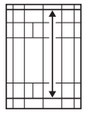	Data processing	U039	Sub Scan	U039 test pattern	P.1-3-44	
2	Adjusting the center line of the MP tray (printing adjustment)	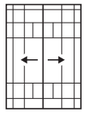	Adjusting the LSU print start timing	U034	LSU Out Left	U034 test pattern	P.1-3-38	To make an adjustment for duplex copying, select Duplex.
3	Adjusting the center line of the cassettes (printing adjustment)	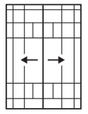	Adjusting the LSU print start timing	U034	LSU Out Left	U034 test pattern	P.1-3-38	
4	Adjusting the leading edge registration of the MP tray (printing adjustment)	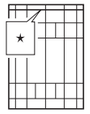	Registration motor turning on timing (secondary paper feed start timing)	U034	LSU Out Top	U034 test pattern	P.1-3-38	To make an adjustment for duplex copying, select Duplex.
5	Adjusting the leading edge registration of the cassette (printing adjustment)	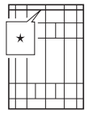	Registration motor turning on timing (secondary paper feed start timing)	U034	LSU Out Top	U034 test pattern	P.1-3-38	
6	Adjusting the leading edge margin (printing adjustment)	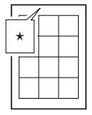	LSU illumination start timing	U402	Lead	U402 test pattern	P.1-3-167	
7	Adjusting the trailing edge margin (printing adjustment)	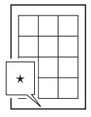	LSU illumination end timing	U402	Trail	U402 test pattern	P.1-3-167	
8	Adjusting the left and right margins (printing adjustment)	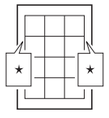	LSU illumination start/end timing	U402	A Margin C Margin	U402 test pattern	P.1-3-167	
9	Adjusting magnification of the scanner in the main scanning direction (scanning adjustment)	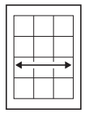	Data processing	U065 U070	Main Scan Main Scan	Test chart	P.1-3-56 P.1-3-61	U065: For copying an original placed on the platen. U070: For copying originals from the DP.
10	Adjusting magnification of the scanner in the auxiliary scanning direction (scanning adjustment)	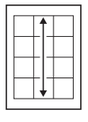	Original scanning speed	U065 U070	Sub Scan Sub Scan	Test chart	P.1-3-56 P.1-3-61	U065: For copying an original placed on the platen. U070: For copying originals from the DP.

Adjusting order	Item	Image	Description	Maintenance mode		Original	Page	Remarks
				Item No.	Mode			
11	Adjusting the center line (scanning adjustment)	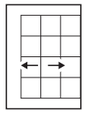	Adjusting the original scan data (image adjustment)	U067 U072	Front Rotate Front Back	Test chart	P.1-3-59 P.1-3-65	U067: For copying an original placed on the platen. To make an adjustment for rotate copying, select Rotate. U072: For copying originals from the DP. To make an adjustment for duplex copying, select Back.
12	Adjusting the leading edge registration (scanning adjustment)	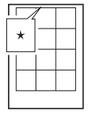	Original scan start timing	U066 U071	Front Rotate Front Head Back Head	Test chart	P.1-3-58 P.1-3-63	U066: For copying an original placed on the platen. To make an adjustment for trailing edge registration, select Rotate. U071: For copying originals from the DP. To make an adjustment for duplex copying, select Back Head.
13	Adjusting the leading edge margin (scanning adjustment)	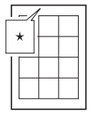	Adjusting the original scan data (image adjustment)	U403 U404	B Margin B Margin	Test chart	P.1-3-168 P.1-3-169	U403: For copying an original placed on the contact glass U404: For copying originals from the DP.
14	Adjusting the trailing edge margin (scanning adjustment)	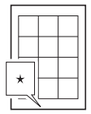	Adjusting the original scan data (image adjustment)	U403 U404	D Margin D Margin	Test chart	P.1-3-168 P.1-3-169	U403: For copying an original placed on the contact glass U404: For copying originals from the DP.
15	Adjusting the left and right margins (scanning adjustment)	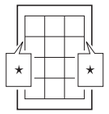	Adjusting the original scan data (image adjustment)	U403 U404	A Margin C Margin A Margin C Margin	Test chart	P.1-3-168 P.1-3-169	U403: For copying an original placed on the contact glass U404: For copying originals from the DP.

When maintenance item U411 (Automatic adjustment in the scanner) is run using the specified original (P/N 7505000005), the following adjustments are automatically made:
Adjusting the scanner auxiliary scanning direction magnification (U065)
Adjusting the scanner leading edge registration (U066)
Adjusting the scanner center line (U067)
Adjusting the DP magnification (U070)
Adjusting the DP leading edge registration (U071)
Adjusting the DP center line (U072)

When maintenance item U411 (Automatic adjustment in the scanner) is run using the specified original (P/N 302AC68243), the following adjustments are automatically made:
Adjusting the DP magnification (U070)
Adjusting the DP leading edge registration (U071)
Adjusting the DP center line (U072)

When maintenance item U411 (Automatic adjustment in the scanner) is run using the chart printed from the machine, the following adjustments are automatically made:
Adjusting the DP magnification (U070)
Adjusting the DP leading edge registration (U071)
Adjusting the DP center line (U072)
Adjusting the DP magnification (U070)
Adjusting the DP leading edge registration (U071)
Adjusting the DP center line (U072)

When maintenance item U415 (Adjusting the print position automatically) is run, the following adjustments are automatically made:
Adjusting the printer leading edge registration (U034)
Adjusting the printer center line (U034)
Adjusting the printer margin (U402)

Image quality

Item	Specifications	Item	Specifications
100% magnification	Machine: ± 0.8 %	Leading edge registration	Cassette: +1.0/-1.5 mm
	Using DP: ± 1.5 %		MP tray: +1.0/-1.5 mm
Enlargement/ reduction	Machine: ± 1.0 %		Duplex: +1.0/-1.5 mm
	Using DP: ± 1.5 %	Skewed paper feed (left-right difference)	Cassette: 1.5 mm or less
Lateral squareness	Machine: ± 1.5 mm/375 mm		MP tray: 1.5 mm or less
	Using DP: ± 3.0 mm/375 mm		Duplex: 2.0 mm or less
		Lateral image shifting	Cassette: ± 2.0 mm
			MP tray: ± 2.0 mm
			Duplex: ± 3.0 mm

(10) Wiring diagram

No.1 (30 ppm/35 ppm model)

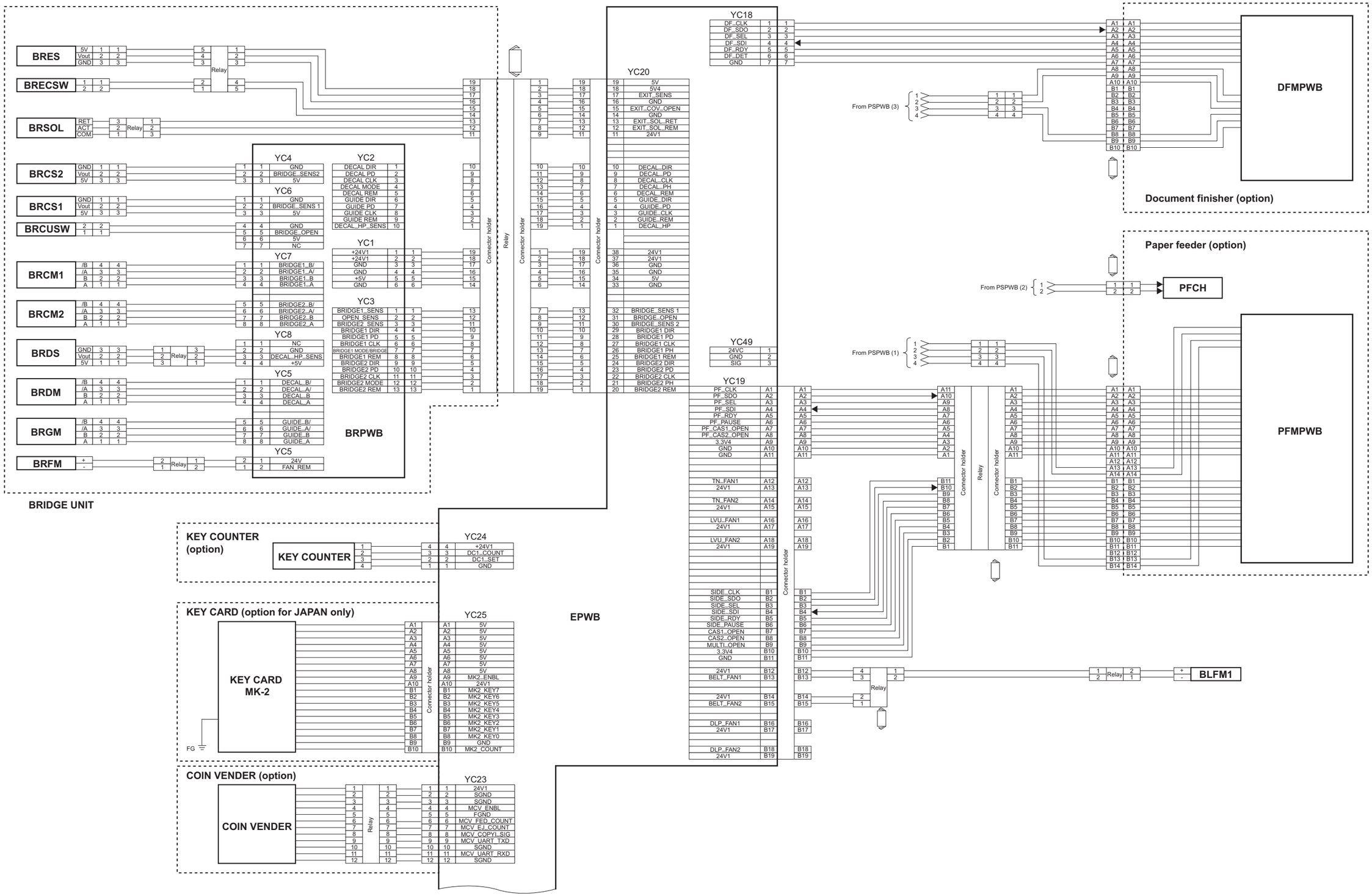

No.1 (45 ppm/55 ppm model)

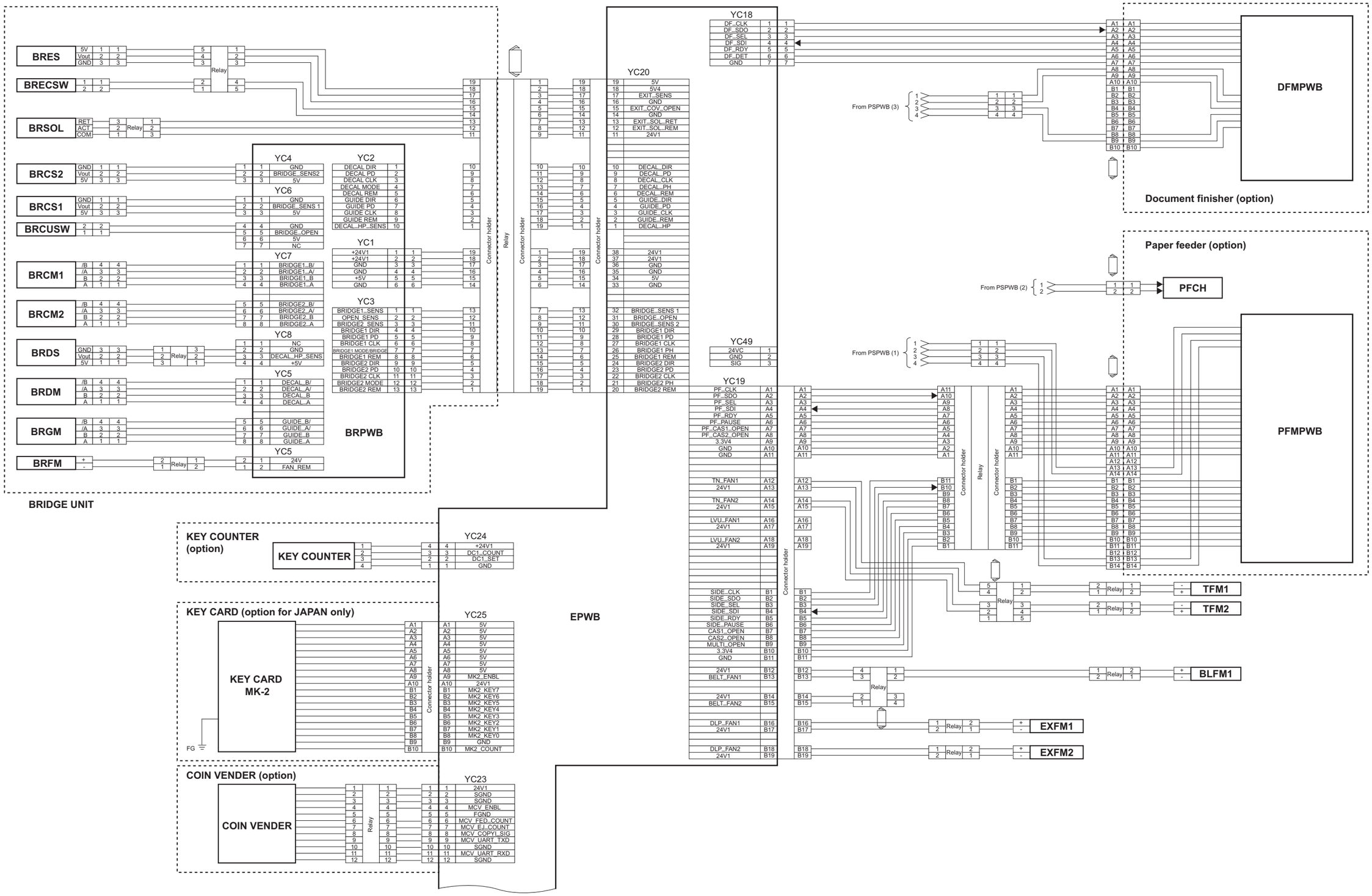

No.2 (30 ppm model)

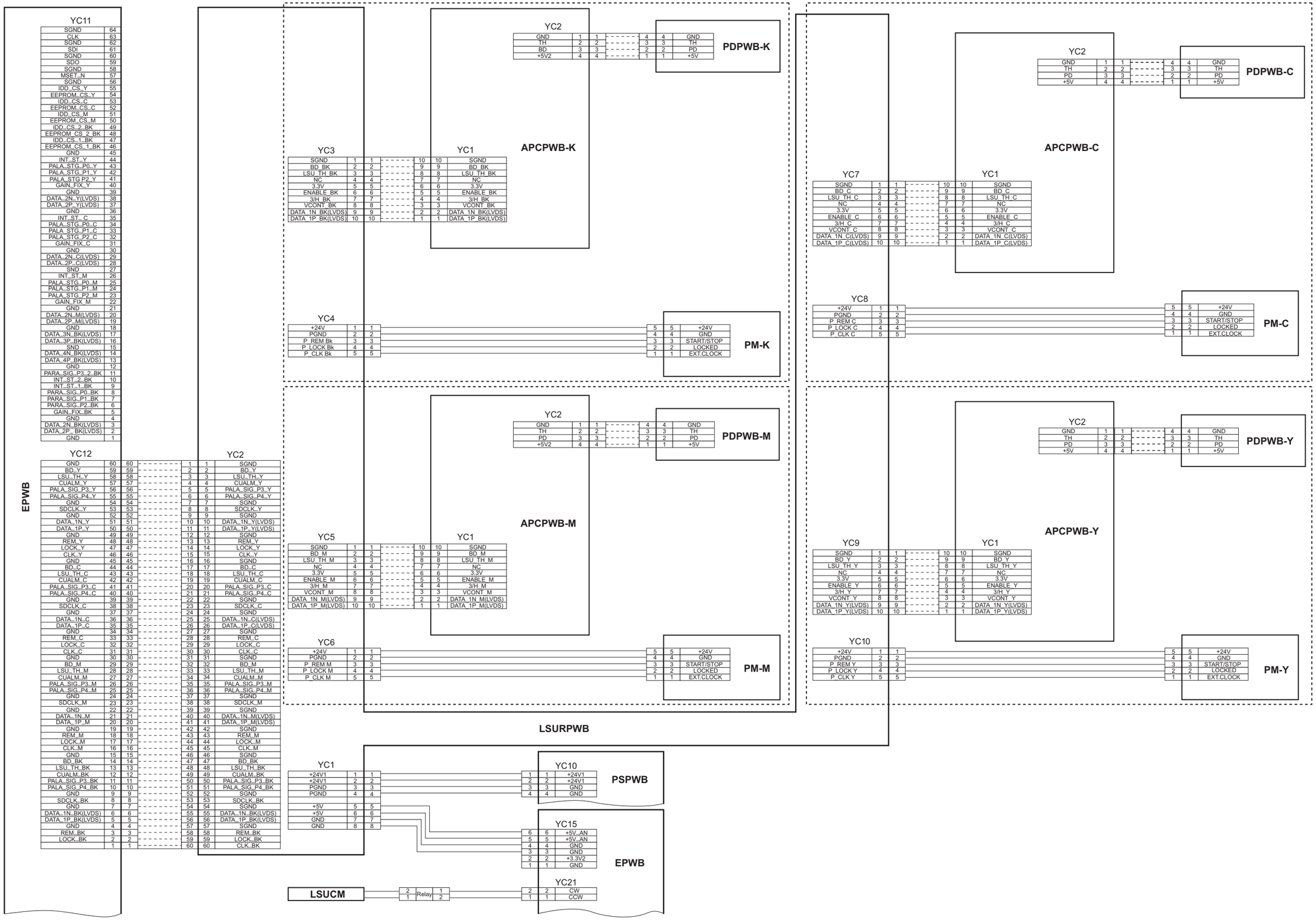

No.2 (35 ppm/45 ppm/55 ppm model)

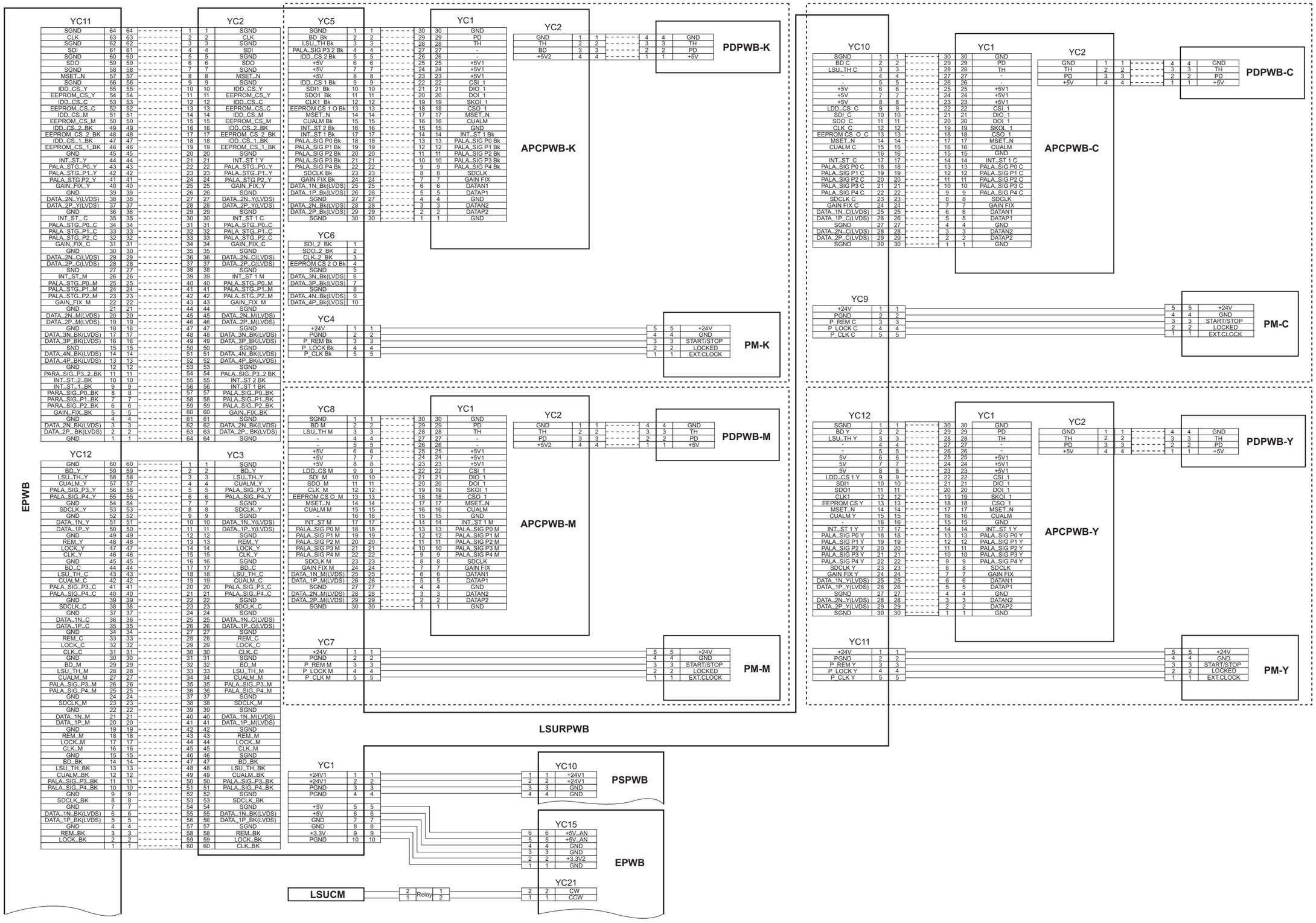

No.3

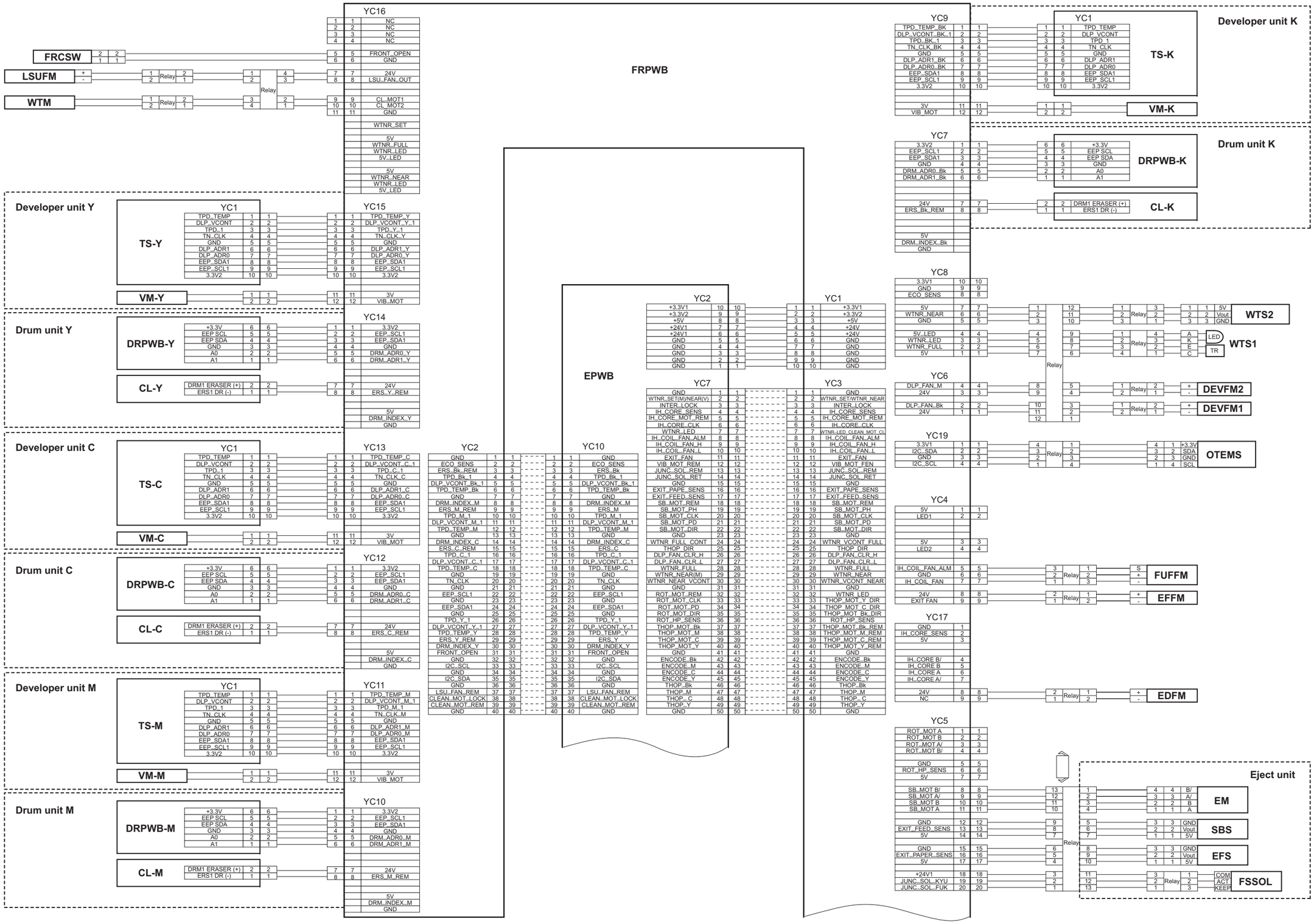
FRPWB
EPWB
YC16
FRCSW
LSUFM
WTM
Relay
Developer unit Y
TS-Y
VM-Y
YC1
YC15
Drum unit Y
DRPWB-Y
CL-Y
YC14
Developer unit C
TS-C
VM-C
YC13
Drum unit C
DRPWB-C
CL-C
YC12
Developer unit M
TS-M
VM-M
YC11
Drum unit M
DRPWB-M
CL-M
YC10
YC2
YC7
YC3
YC9
TS-K
VM-K
Developer unit K
DRPWB-K
CL-K
Drum unit K
YC8
WTS2
WTS1
LED
TR
YC6
DEVFM2
DEVFM1
YC19
OTEMS
YC4
FUFFM
EFFM
YC17
EDFM
YC5
Eject unit
EM
SBS
EFS
FSSOL
COM
ACT
KEEP

No.4 (30 ppm/35 ppm model)

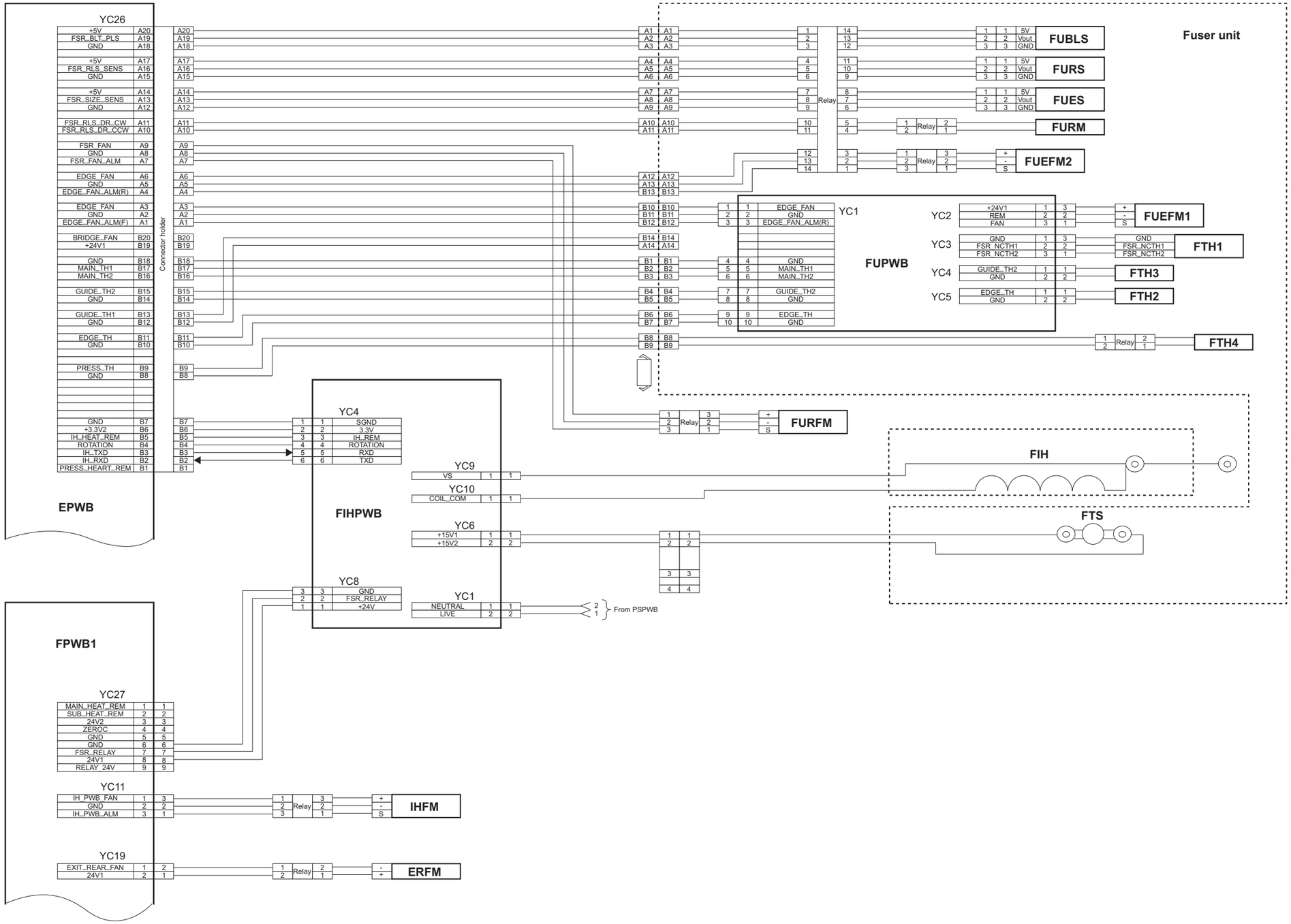

No.4 (45 ppm/55 ppm model)

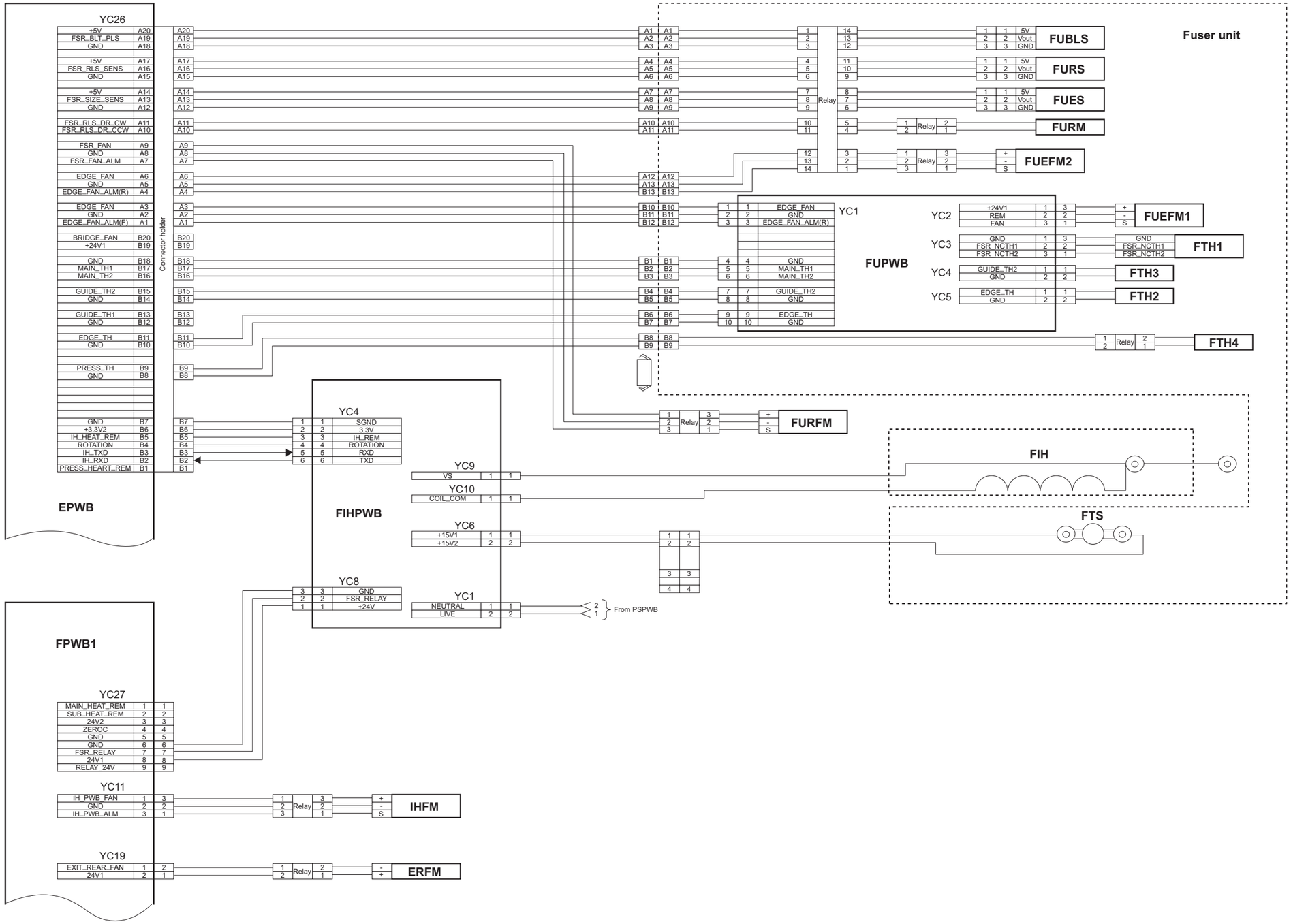

No.5 (30 ppm/35 ppm model)

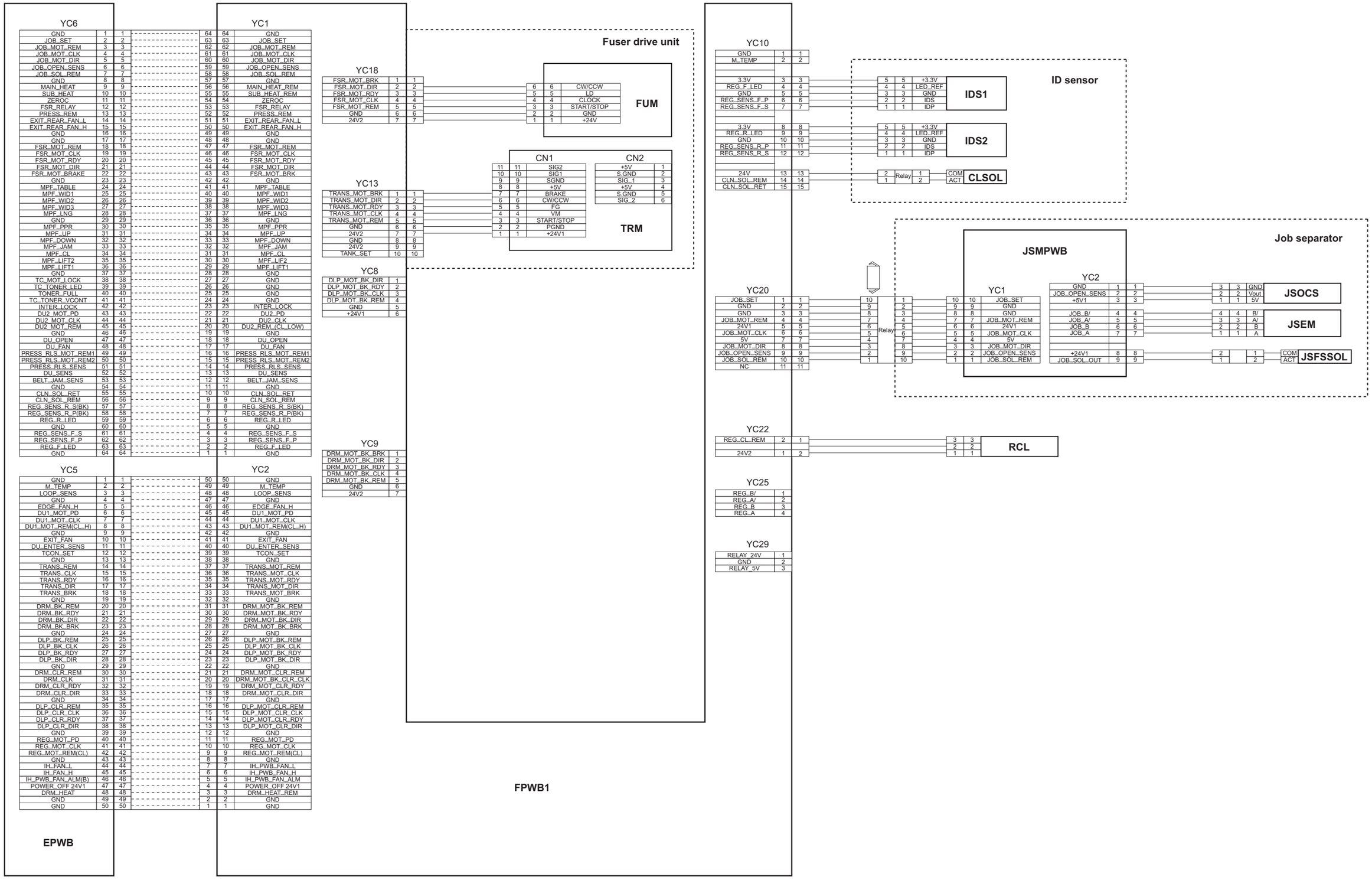

No.5 (45 ppm/55 ppm model)

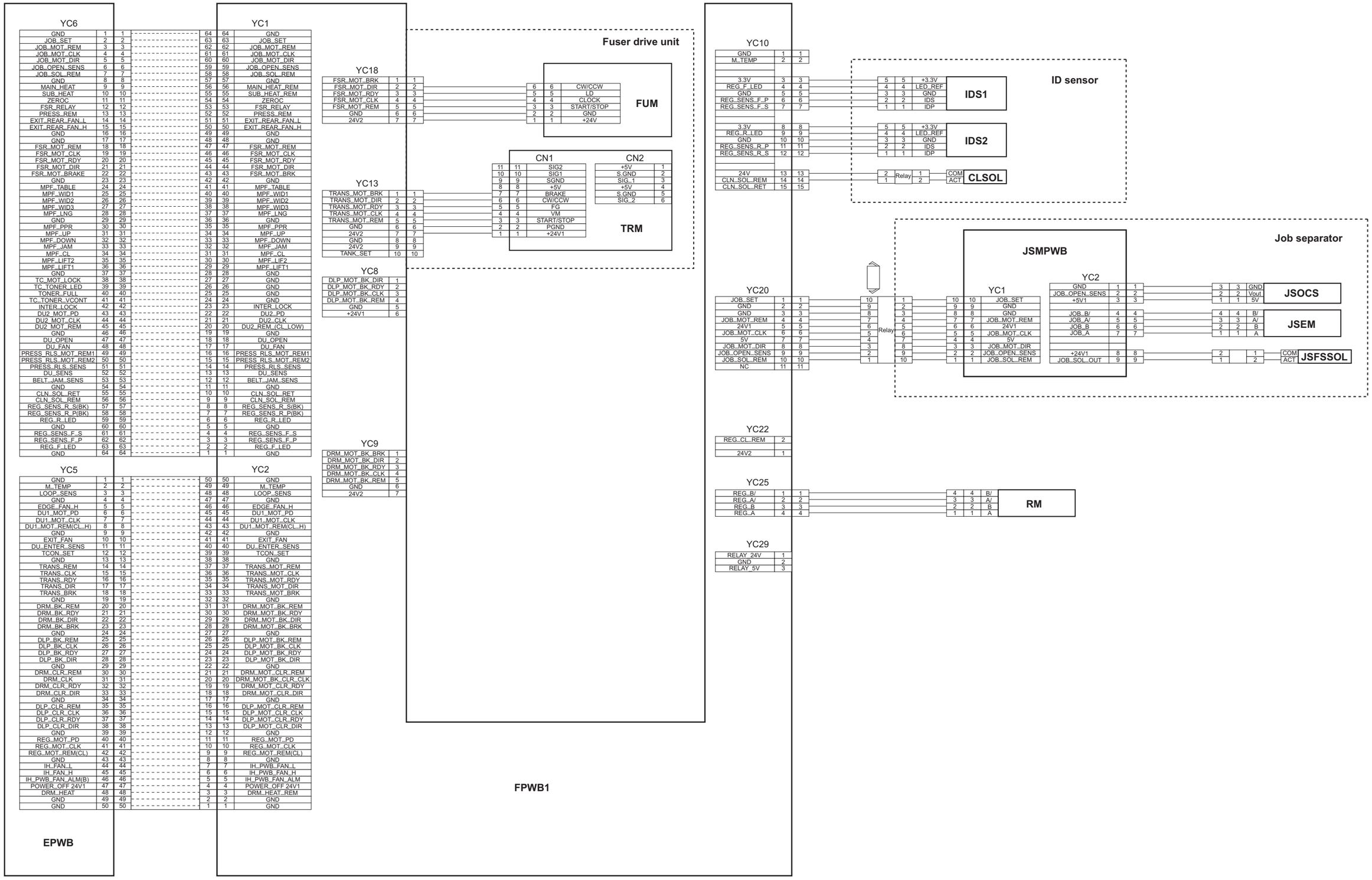

No.6 (30 ppm/35 ppm model)

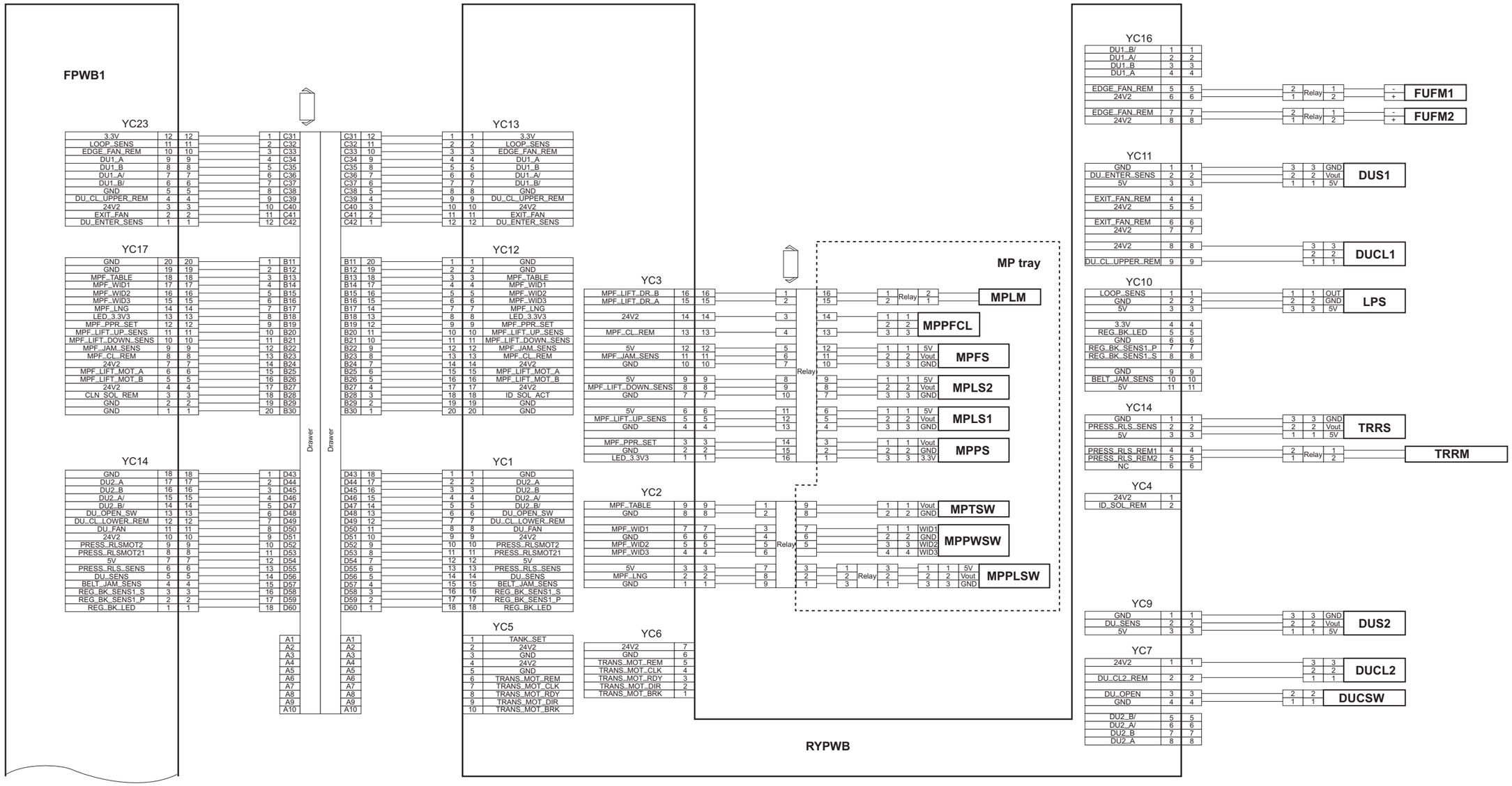

No.6 (45 ppm/55 ppm model)

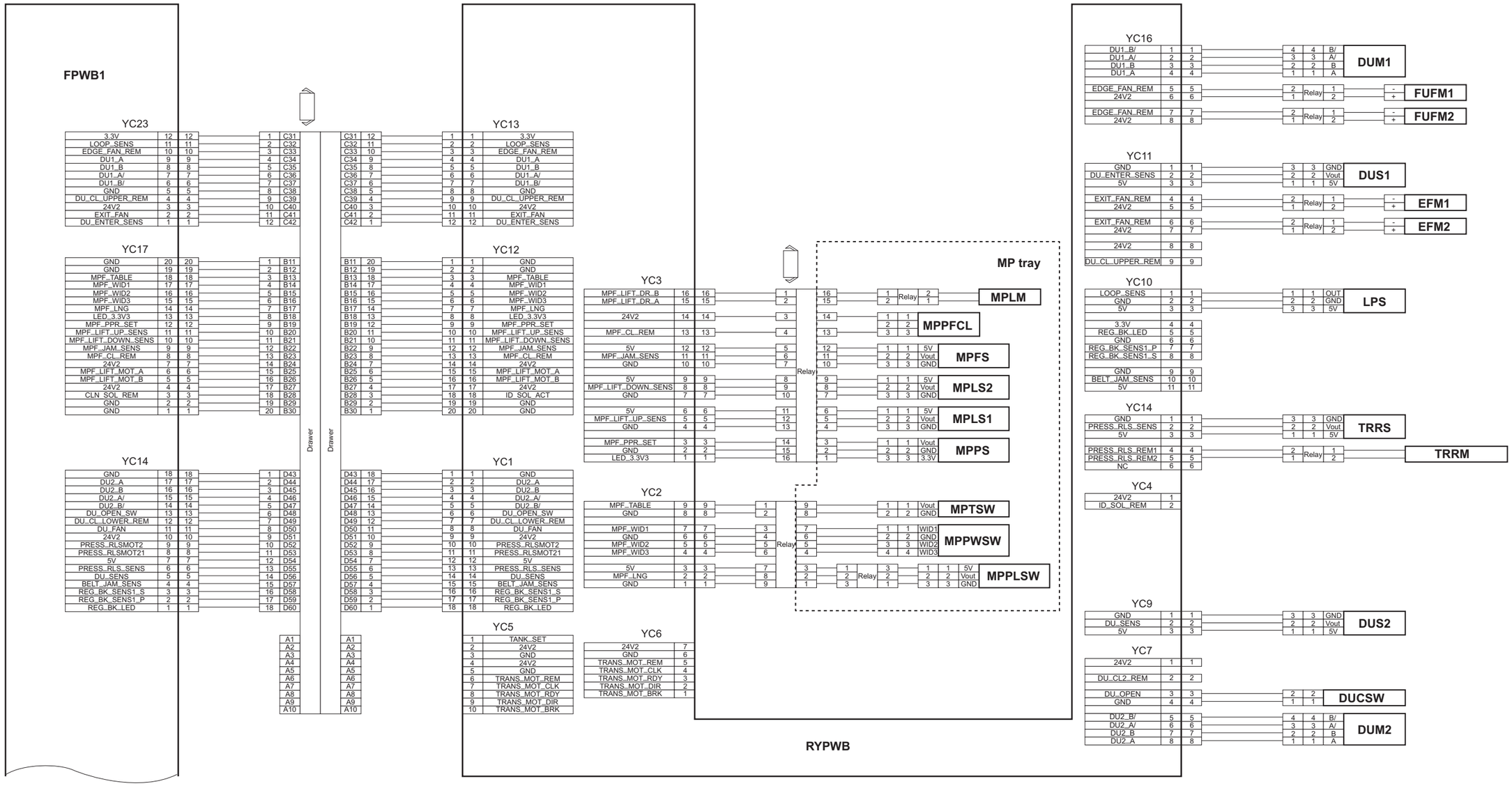

No.7 (30 ppm/35 ppm model)

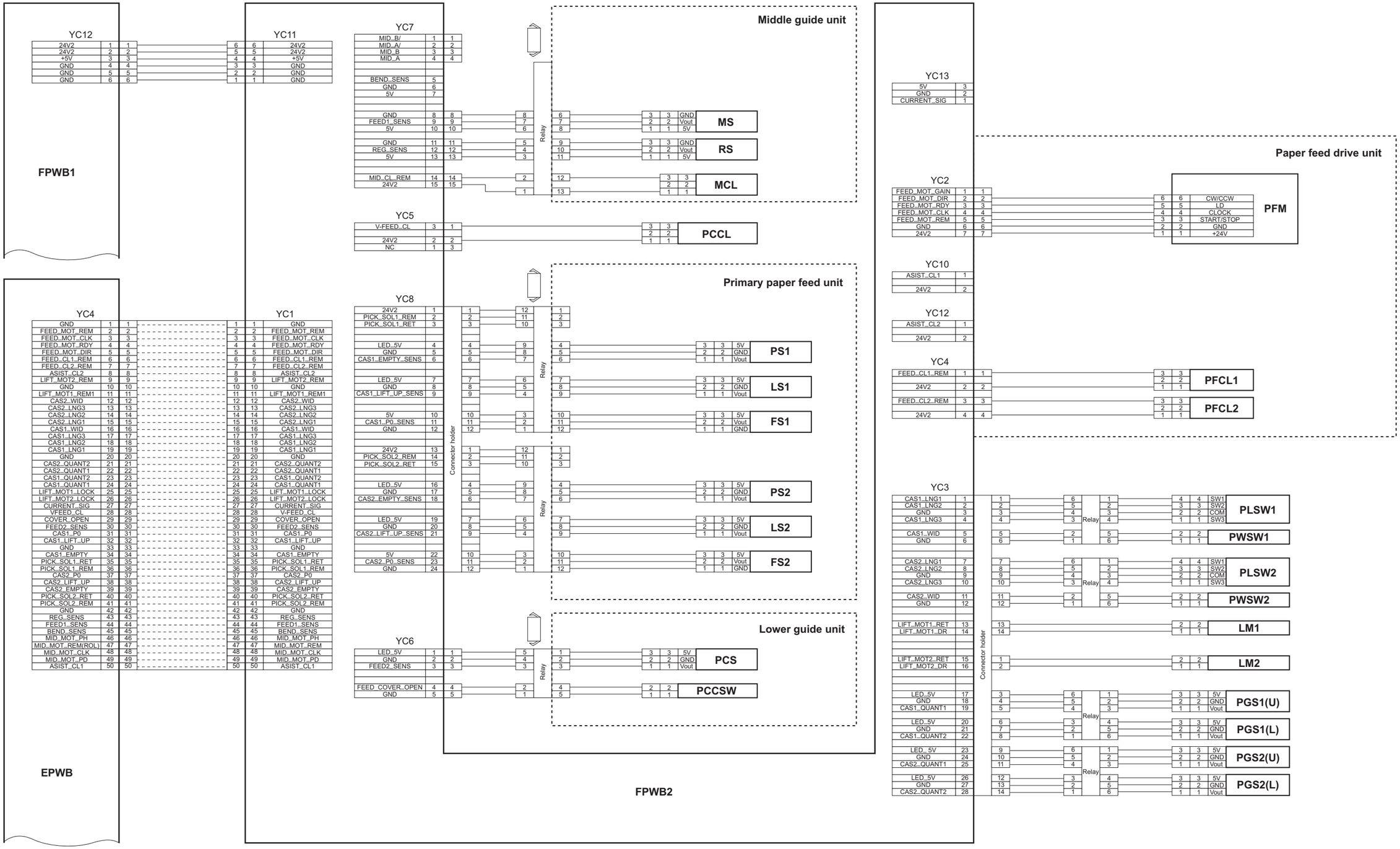

No.7 (45 ppm/55 ppm model)

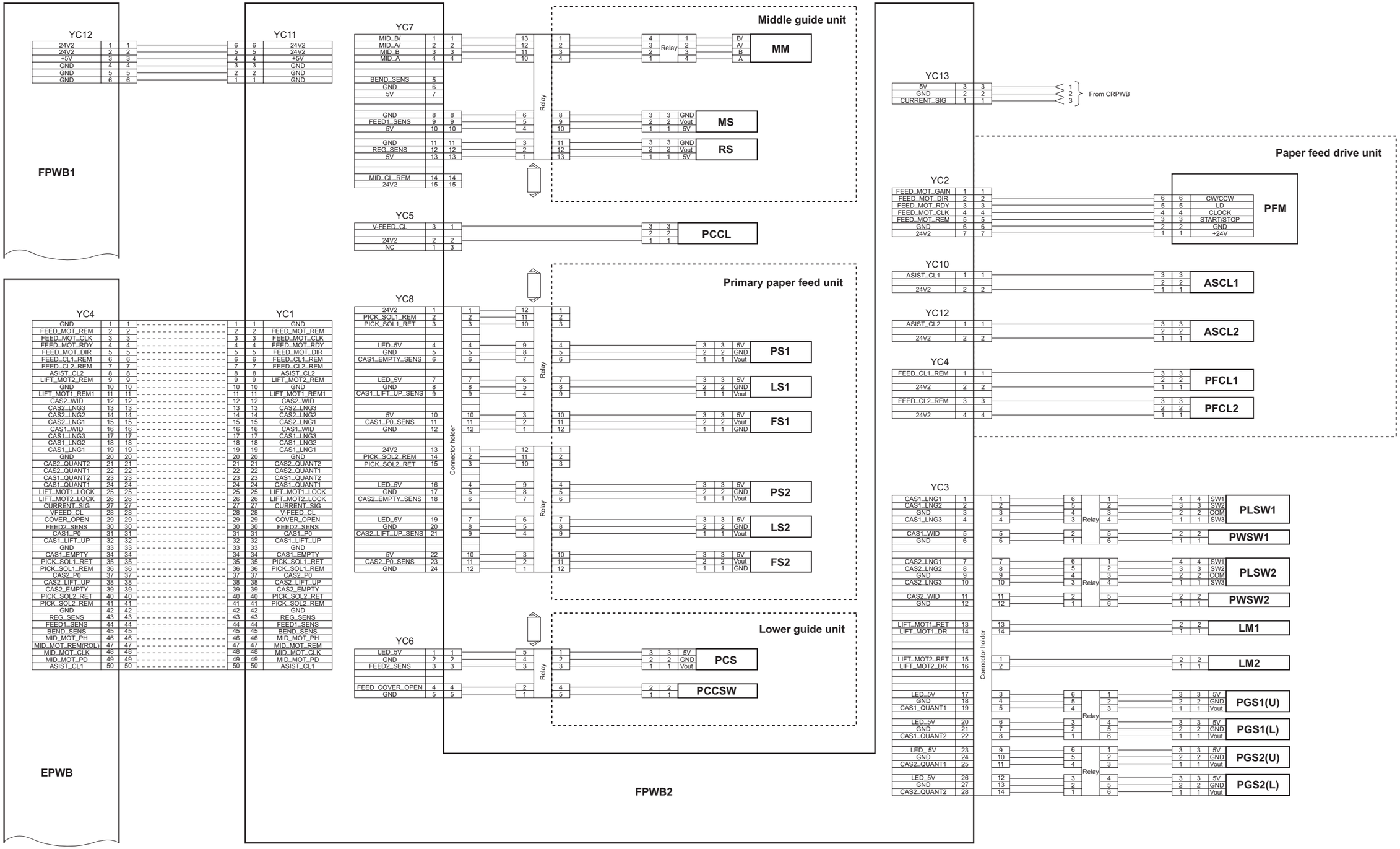

No.8 (30 ppm/35 ppm model)

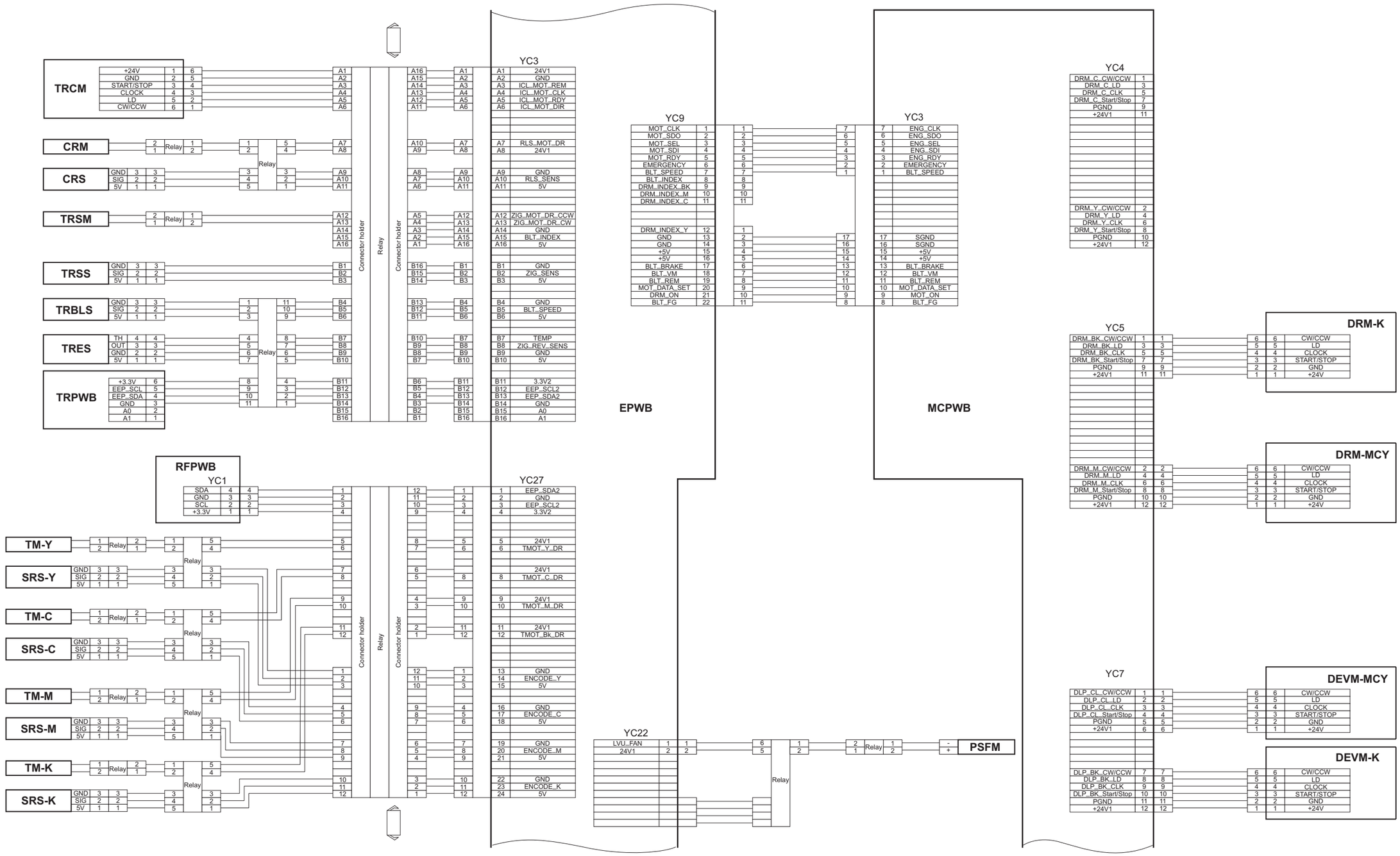

No.8 (45 ppm/55 ppm model)

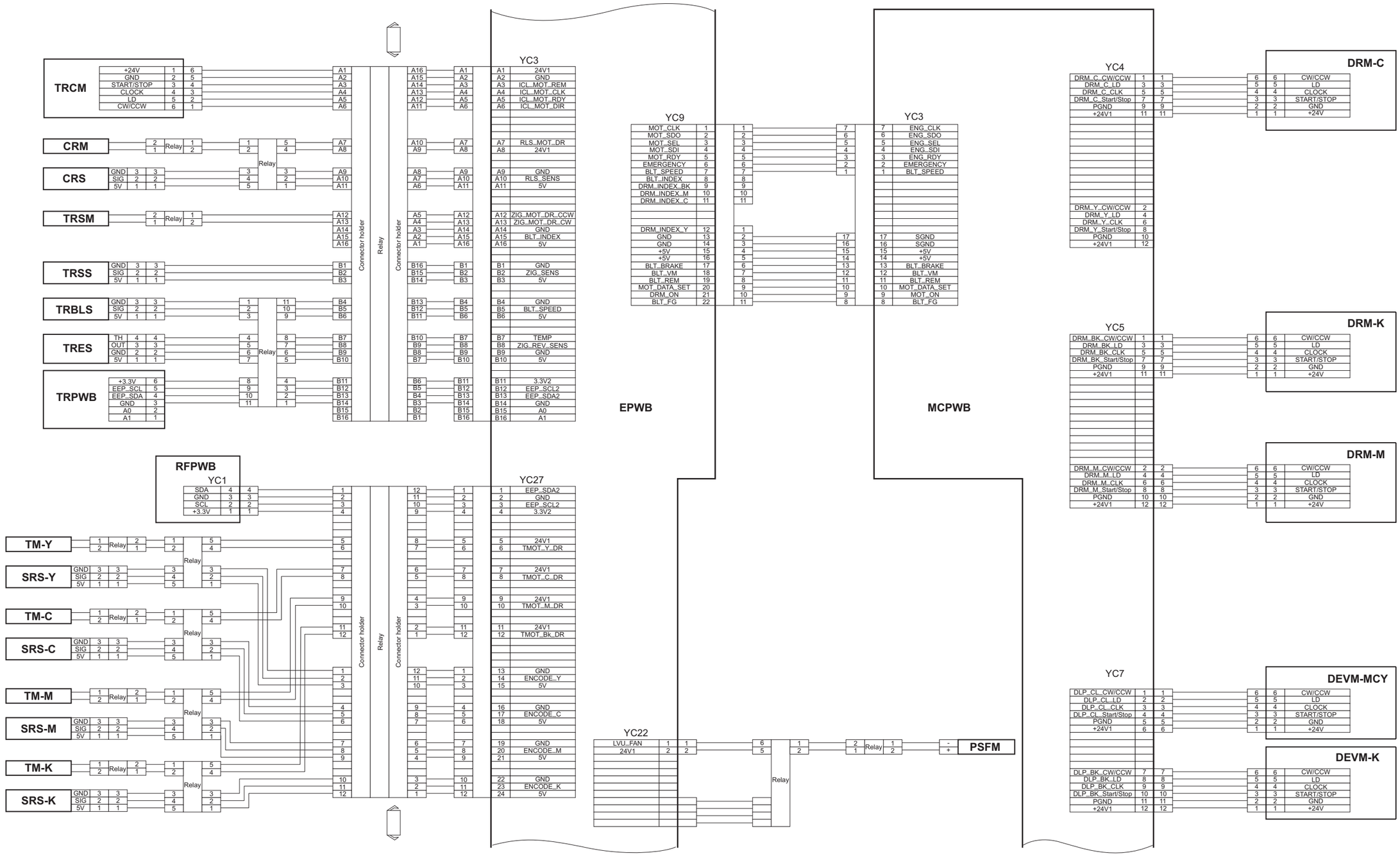

No.9

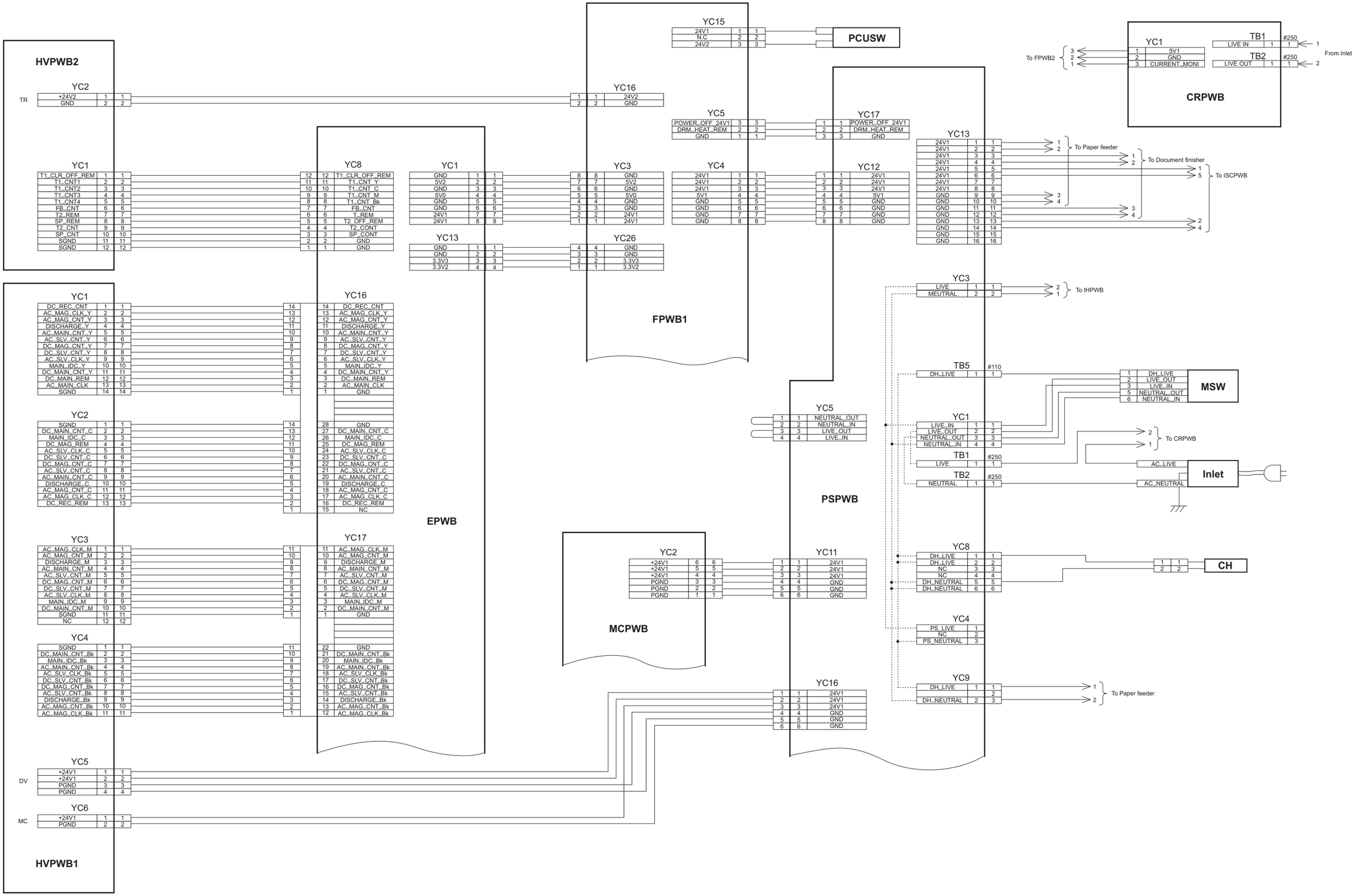
HVPWB2
YC2
TR
+24V2 1 1
GND 2 2
YC1
T1_CLR_OFF_REM 1 1
T1_CNT1 2 2
T1_CNT2 3 3
T1_CNT3 4 4
T1_CNT4 5 5
FB_CNT 6 6
T2_REM 7 7
SP_REM 8 8
T2_CNT 9 9
SP_CNT 10 10
SGND 11 11
SGND 12 12
YC8
12 12 T1_CLR_OFF_REM
11 11 T1_CNT_Y
10 10 T1_CNT_C
9 9 T1_CNT_M
8 8 T1_CNT_Bk
7 7 FB_CNT
6 6 T_REM
5 5 T2_OFF_REM
4 4 T2_CONT
3 3 SP_CONT
2 2 GND
1 1 GND
YC1
GND 1 1
5V2 2 2
GND 3 3
5V0 4 4
GND 5 5
GND 6 6
24V1 7 7
24V1 8 8
YC13
GND 1 1
GND 2 2
3.3V3 3 3
3.3V2 4 4
YC16
1 1 24V2
2 2 GND
YC3
8 8 GND
7 7 5V2
6 6 GND
5 5 5V0
4 4 GND
3 3 GND
2 2 24V1
1 1 24V1
YC26
4 4 GND
3 3 GND
2 2 3.3V3
1 1 3.3V2
FPWB1
YC15
24V1 1 1
N.C 2 2
24V2 3 3
PCUSW
YC5
POWER_OFF_24V1 3 3
DRM_HEAT_REM 2 2
GND 1 1
YC4
24V1 1 1
24V1 2 2
24V1 3 3
5V1 4 4
GND 5 5
GND 6 6
GND 7 7
GND 8 8
YC17
1 1 POWER_OFF_24V1
2 2 DRM_HEAT_REM
3 3 GND
YC12
1 1 24V1
2 2 24V1
3 3 24V1
4 4 5V1
5 5 GND
6 6 GND
7 7 GND
8 8 GND
YC1
5V1 1
GND 2
CURRENT_MONI 3
To FPWB2 3 2 1
CRPWB
TB1 #250
LIVE IN 1 1
From Inlet 1
TB2 #250
LIVE OUT 1 1
2
YC13
24V1 1 1
24V1 2 2
24V1 3 3
24V1 4 4
24V1 5 5
24V1 6 6
24V1 7 7
24V1 8 8
GND 9 9
GND 10 10
GND 11 11
GND 12 12
GND 13 13
GND 14 14
GND 15 15
GND 16 16
To Paper feeder 1 2
To Document finisher 1 2
To ISCPWB 1 5
3 4
3 4
2 4
YC3
LIVE 1 1
MEUTRAL 2 2
To IHPWB 2 1
TB5 #110
DH_LIVE 1 1
MSW
1 DH_LIVE
2 LIVE_OUT
3 LIVE_IN
5 NEUTRAL_OUT
6 NEUTRAL_IN
YC1
LIVE_IN 1 1
LIVE_OUT 2 2
NEUTRAL_OUT 3 3
NEUTRAL_IN 4 4
To CRPWB 2 1
TB1 #250
LIVE 1 1
AC_LIVE
TB2 #250
NEUTRAL 1 1
AC_NEUTRAL
Inlet
YC8
DH_LIVE 1 1
DH_LIVE 2 2
NC 3 3
NC 4 4
DH_NEUTRAL 5 5
DH_NEUTRAL 6 6
CH
1 1
2 2
YC4
PS_LIVE 1
NC 2
PS_NEUTRAL 3
YC9
DH_LIVE 1 1
2
DH_NEUTRAL 2 3
To Paper feeder 1 2
YC5
1 1 NEUTRAL_OUT
2 2 NEUTRAL_IN
3 3 LIVE_OUT
4 4 LIVE_IN
PSPWB
YC16
1 1 24V1
2 2 24V1
3 3 24V1
4 4 GND
5 5 GND
6 6 GND
YC1
DC_REC_CNT 1 1
AC_MAG_CLK_Y 2 2
AC_MAG_CNT_Y 3 3
DISCHARGE_Y 4 4
AC_MAIN_CNT_Y 5 5
AC_SLV_CNT_Y 6 6
DC_MAG_CNT_Y 7 7
DC_SLV_CNT_Y 8 8
AC_SLV_CLK_Y 9 9
MAIN_IDC_Y 10 10
DC_MAIN_CNT_Y 11 11
DC_MAIN_REM 12 12
AC_MAIN_CLK 13 13
SGND 14 14
YC2
SGND 1 1
DC_MAIN_CNT_C 2 2
MAIN_IDC_C 3 3
DC_MAG_REM 4 4
AC_SLV_CLK_C 5 5
DC_SLV_CNT_C 6 6
DC_MAG_CNT_C 7 7
AC_SLV_CNT_C 8 8
AC_MAIN_CNT_C 9 9
DISCHARGE_C 10 10
AC_MAG_CNT_C 11 11
AC_MAG_CLK_C 12 12
DC_REC_REM 13 13
YC16
14 14 DC_REC_CNT
13 13 AC_MAG_CLK_Y
12 12 AC_MAG_CNT_Y
11 11 DISCHARGE_Y
10 10 AC_MAIN_CNT_Y
9 9 AC_SLV_CNT_Y
8 8 DC_MAG_CNT_Y
7 7 DC_SLV_CNT_Y
6 6 AC_SLV_CLK_Y
5 5 MAIN_IDC_Y
4 4 DC_MAIN_CNT_Y
3 3 DC_MAIN_REM
2 2 AC_MAIN_CLK
1 1 GND
14 28 GND
13 27 DC_MAIN_CNT_C
12 26 MAIN_IDC_C
11 25 DC_MAG_REM
10 24 AC_SLV_CLK_C
9 23 DC_SLV_CNT_C
8 22 DC_MAG_CNT_C
7 21 AC_SLV_CNT_C
6 20 AC_MAIN_CNT_C
5 19 DISCHARGE_C
4 18 AC_MAG_CNT_C
3 17 AC_MAG_CLK_C
2 16 DC_REC_REM
1 15 NC
EPWB
YC3
AC_MAG_CLK_M 1 1
AC_MAG_CNT_M 2 2
DISCHARGE_M 3 3
AC_MAIN_CNT_M 4 4
AC_SLV_CNT_M 5 5
DC_MAG_CNT_M 6 6
DC_SLV_CNT_M 7 7
AC_SLV_CLK_M 8 8
MAIN_IDC_M 9 9
DC_MAIN_CNT_M 10 10
SGND 11 11
NC 12 12
YC17
11 11 AC_MAG_CLK_M
10 10 AC_MAG_CNT_M
9 9 DISCHARGE_M
8 8 AC_MAIN_CNT_M
7 7 AC_SLV_CNT_M
6 6 DC_MAG_CNT_M
5 5 DC_SLV_CNT_M
4 4 AC_SLV_CLK_M
3 3 MAIN_IDC_M
2 2 DC_MAIN_CNT_M
1 1 GND
YC4
SGND 1 1
DC_MAIN_CNT_Bk 2 2
MAIN_IDC_Bk 3 3
AC_MAIN_CNT_Bk 4 4
AC_SLV_CLK_Bk 5 5
DC_SLV_CNT_Bk 6 6
DC_MAG_CNT_Bk 7 7
AC_SLV_CNT_Bk 8 8
DISCHARGE_Bk 9 9
AC_MAG_CNT_Bk 10 10
AC_MAG_CLK_Bk 11 11
11 22 GND
10 21 DC_MAIN_CNT_Bk
9 20 MAIN_IDC_Bk
8 19 AC_MAIN_CNT_Bk
7 18 AC_SLV_CLK_Bk
6 17 DC_SLV_CNT_Bk
5 16 DC_MAG_CNT_Bk
4 15 AC_SLV_CNT_Bk
3 14 DISCHARGE_Bk
2 13 AC_MAG_CNT_Bk
1 12 AC_MAG_CLK_Bk
YC5
DV
+24V1 1 1
+24V1 2 2
PGND 3 3
PGND 4 4
YC6
MC
+24V1 1 1
PGND 2 2
HVPWB1
MCPWB
YC2
+24V1 6 6
+24V1 5 5
+24V1 4 4
PGND 3 3
PGND 2 2
PGND 1 1
YC11
1 1 24V1
2 2 24V1
3 3 24V1
4 4 GND
5 5 GND
6 6 GND

No.10(30 ppm/35 ppm model)

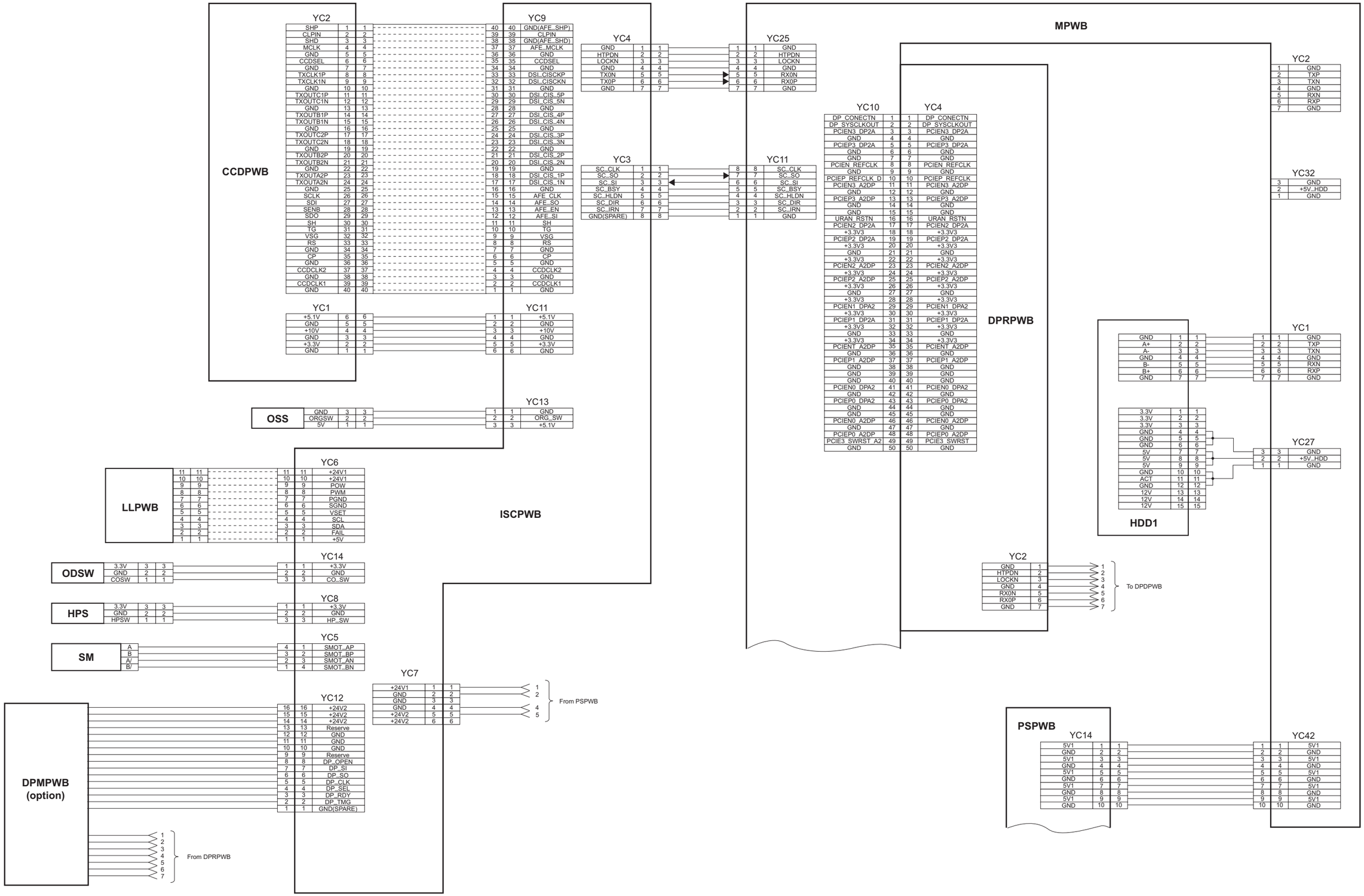

No.10 (45 ppm/55 ppm model)

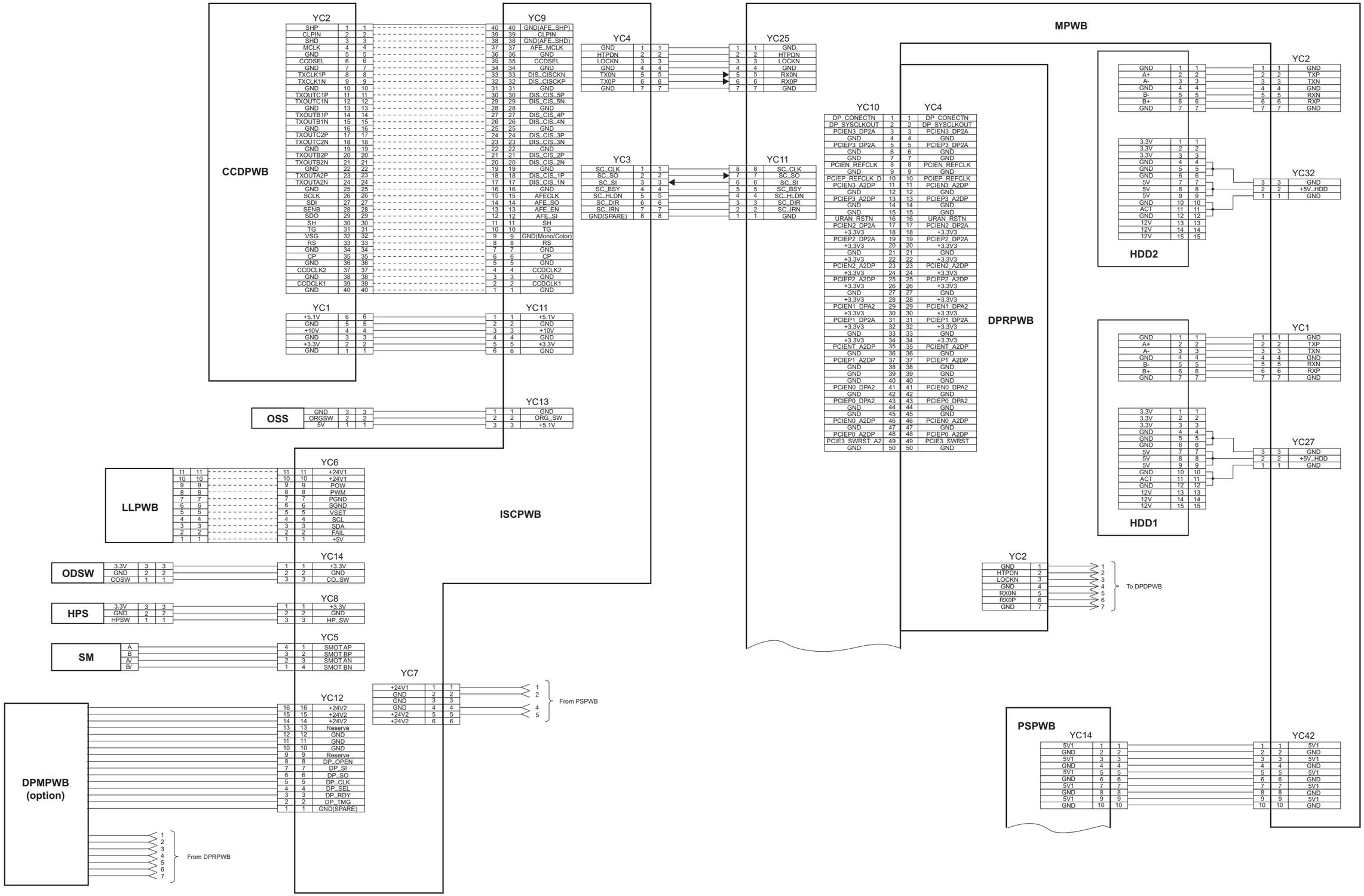

No.11

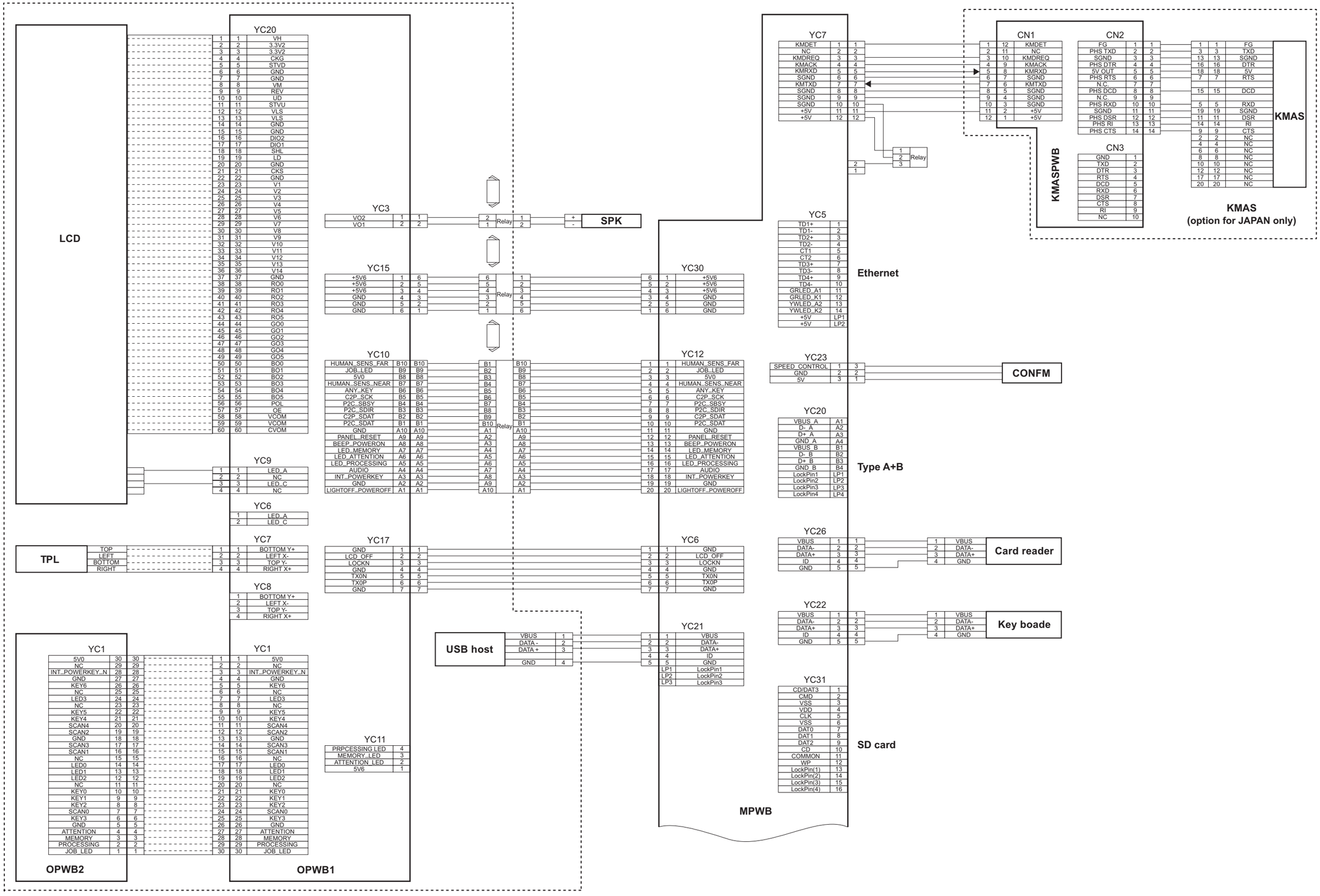
LCD
YC20
YC9
YC6
YC7
YC8
TPL
TOP
LEFT
BOTTOM
RIGHT
YC1
OPWB2
OPWB1
YC3
SPK
YC15
YC10
YC17
YC11
Relay
USB host
YC30
YC12
YC6
YC21
YC7
YC5
Ethernet
YC23
CONFM
YC20
Type A+B
YC26
Card reader
YC22
Key boade
YC31
SD card
MPWB
CN1
CN2
CN3
KMASPWB
KMAS
KMAS
(option for JAPAN only)

No.12

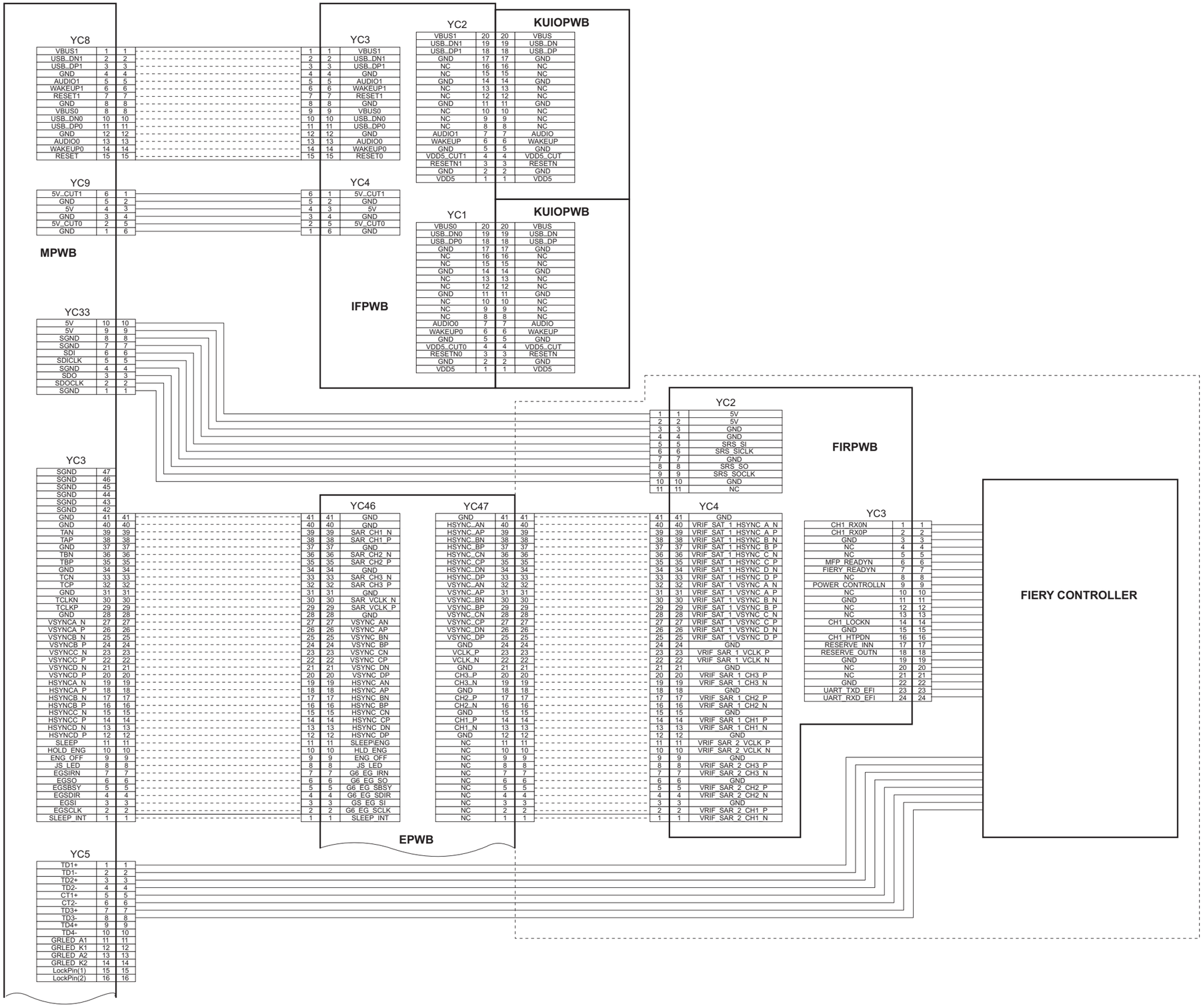
MPWB
IFPWB
KUIOPWB
KUIOPWB
FIRPWB
EPWB
FIERY CONTROLLER
YC8
YC9
YC33
YC3
YC5
YC3
YC4
YC2
YC1
YC2
YC4
YC3
YC46
YC47

No.13

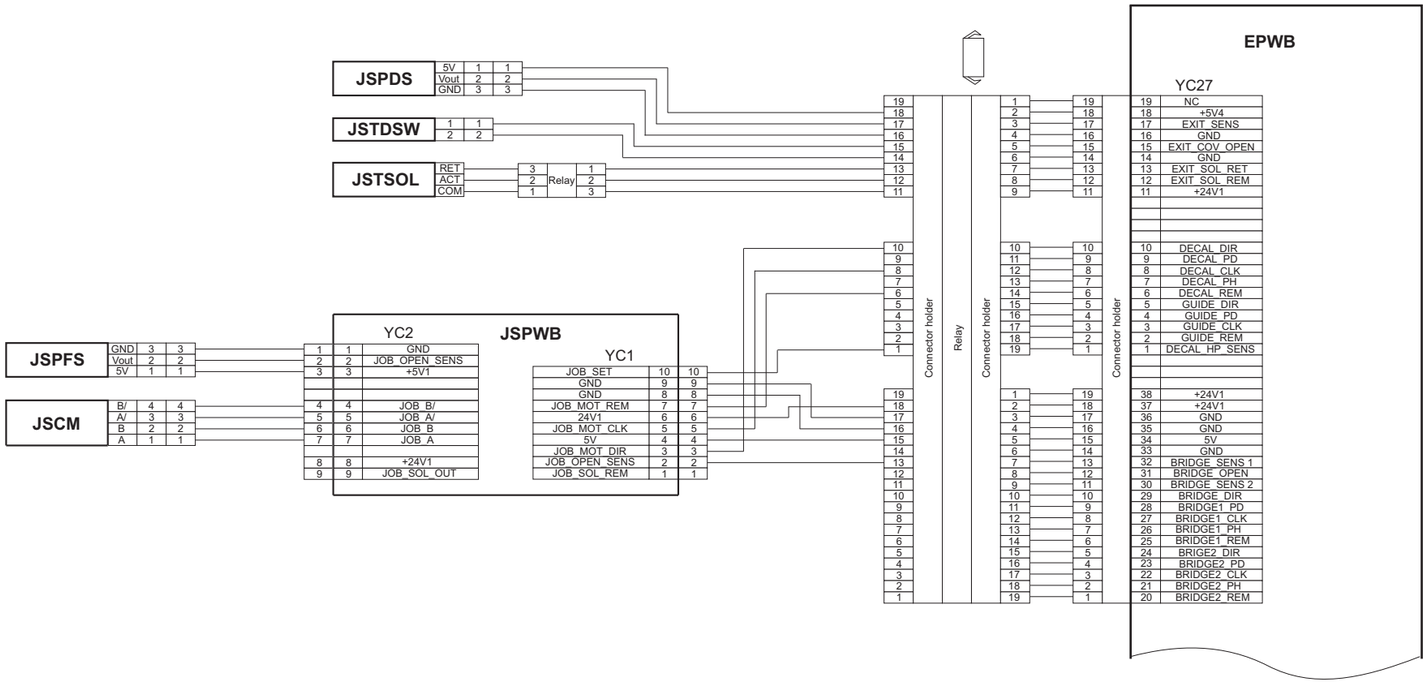
EPWB
YC27
JSPDS
5V 1 1
Vout 2 2
GND 3 3
JSTDSW
1 1
2 2
JSTSOL
RET
ACT
COM
Relay
JSPFS
GND 3 3
Vout 2 2
5V 1 1
JSCM
B/ 4 4
A/ 3 3
B 2 2
A 1 1
YC2
JSPWB
1 1 GND
2 2 JOB_OPEN_SENS
3 3 +5V1
4 4 JOB_B/
5 5 JOB_A/
6 6 JOB_B
7 7 JOB_A
8 8 +24V1
9 9 JOB_SOL_OUT
YC1
JOB_SET 10 10
GND 9 9
GND 8 8
JOB_MOT_REM 7 7
24V1 6 6
JOB_MOT_CLK 5 5
5V 4 4
JOB_MOT_DIR 3 3
JOB_OPEN_SENS 2 2
JOB_SOL_REM 1 1
Connector holder
Relay
Connector holder
Connector holder
19 NC
18 +5V4
17 EXIT_SENS
16 GND
15 EXIT_COV_OPEN
14 GND
13 EXIT_SOL_RET
12 EXIT_SOL_REM
11 +24V1
10 DECAL_DIR
9 DECAL_PD
8 DECAL_CLK
7 DECAL_PH
6 DECAL_REM
5 GUIDE_DIR
4 GUIDE_PD
3 GUIDE_CLK
2 GUIDE_REM
1 DECAL_HP_SENS
38 +24V1
37 +24V1
36 GND
35 GND
34 5V
33 GND
32 BRIDGE_SENS 1
31 BRIDGE_OPEN
30 BRIDGE_SENS 2
29 BRIDGE_DIR
28 BRIDGE1_PD
27 BRIDGE1_CLK
26 BRIDGE1_PH
25 BRIDGE1_REM
24 BRIGE2_DIR
23 BRIDGE2_PD
22 BRIDGE2_CLK
21 BRIDGE2_PH
20 BRIDGE2_REM

INSTALLATION GUIDE FOR DOCUMENT PROCESSOR

INSTALLATION GUIDE

GUIDE D’INSTALLATION

GUÍA DE INSTALACION

INSTALLATIONSANLEITUNG

GUIDA ALL’INSTALLAZIONE

安装手册

설치안내서

設置手順書

DP-770(B)
DP-771
DP-772

for Color MFP 30/30ppm,35/35ppm,45/45ppm,55/50ppm
for Black & White MFP 35ppm,45ppm,55ppm

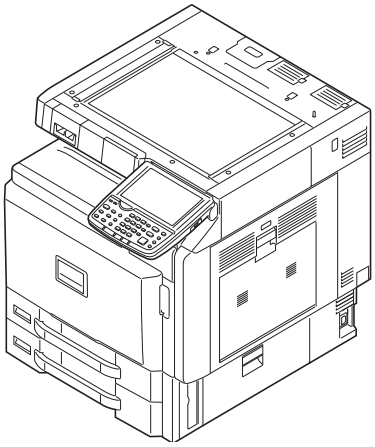

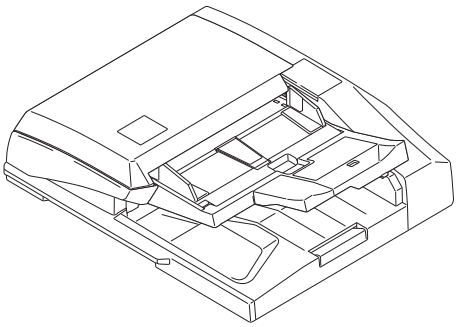

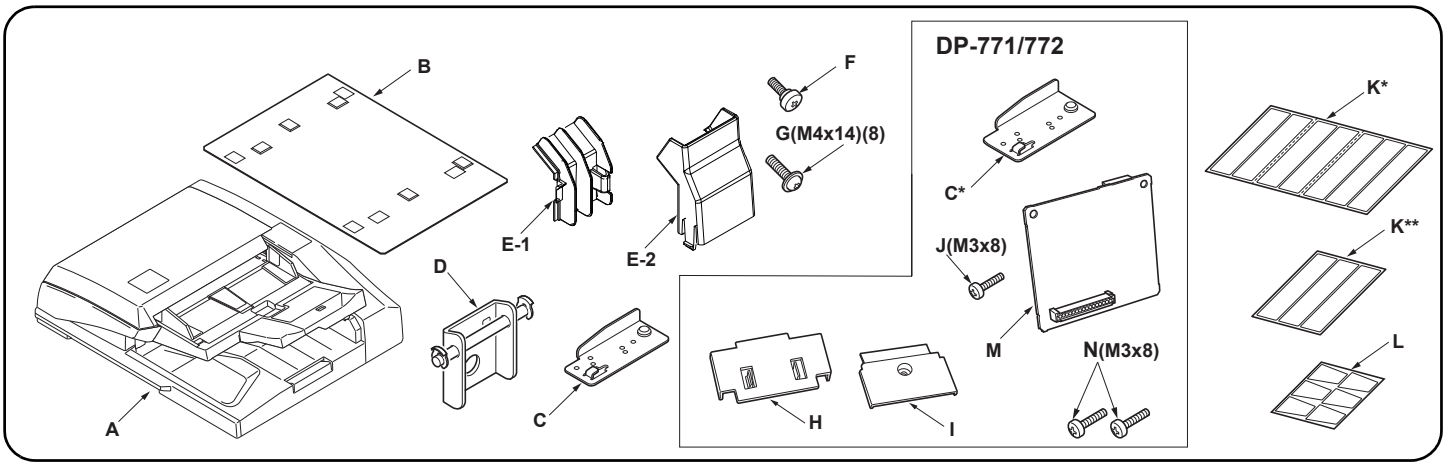

English

Supplied parts

A. DP 1
B. Original mat 1
C. Fixing fitting (width: 38.5 mm) ..... 2 (DP-770(B))
1 (DP-771/772)
C*. Fixing fitting (width: 45 mm)*1 1
D. Angle control fitting 1
E-1. DP cable cover1 1
E-2. DP cable cover2 1
F. Pin 1
G. M4 × 14TP screw 8
H. Left hinge cover*1 1
I. Right hinge cover*1 1
J. M3 × 8 screw BLACK*1 1
K. Label "Operation procedure" 1
*: for metric specification
**: for inch specification
L. Caution label "Original face up!" 1
M. DP relay PWB*1 1
N. M3 × 8 screw*2 2
*1: DP-771/772 only , *2: DP-772 only

Français

Pièces fournies

A. DP 1
B. Plaque d'original 1
C. Fixation (largeur: 38,5 mm) ..... 2 (DP-770(B))
1 (DP-771/772)
C.* Fixation (largeur: 45 mm)*1 1
D. Fixation d'angle 1
E-1. Couvercle du câble du DP1 1
E-2. Couvercle du câble du DP2 1
F. Goupille 1
G. Vis TP M4 × 14 8
H. Couvercle de charnière gauche*1 1
I. Couvercle de charnière droite*1 1
J. Vis M3 × 8 NOIRE*1 1
K. Étiquette relative à la procédure d'utilisation 1
* : pour des spécifications métriques
** : pour des spécifications anglo-saxonnes
L. Étiquette d'avertissement relative à l'orientation vers le haut de la face de l'original 1
M. Carte de circuit imprimé relais du DP*1 1
N. Vis M3 × 8*2 2
*1: DP-771/772 uniquement , *2: DP-772 uniquement

Español

Partes suministradas

A. DP 1
B. Alfombrilla para originales 1
C. Herraje de fijación (anchura: 38,5 mm)
..... 2 (DP-770(B))
1(DP-771/772)
C*. Herraje de fijación (anchura: 45 mm)*1 1
D. Herraje de control de ángulo 1
E-1. Cubierta del cable del DP1 1
E-2. Cubierta del cable del DP2 1
F. Pasador 1
G. Tornillo TP M4 × 14 8
H. Cubierta de la bisagra izquierda*1 1
I. Cubierta de la bisagra derecha*1 1
J. Tornillo M3 × 8 NEGRO*1 1
K. Etiqueta "Procedimiento operativo" 1
*: para especificaciones en el sistema métrico
**: para especificaciones en el sistema de pulgadas
L. Etiqueta de precaución "Original cara arriba" 1
M. PWB del relé del DP*1 1
N. Tornillo M3 × 8*2 2
*1: DP-771/772 solamente , *2: DP-772 solamente

Deutsch

Enthaltene Teile

A. DP 1
B. Originalmatte 1
C. Befestigungshalterung (Breite: 38,5 mm)
..... 2(DP-770(B))
1 (DP-771/772)
C*. Befestigungshalterung (Breite: 45 mm)*1 1
D. Winkeleinstellbefestigung 1
E-1. DP-Kabelabdeckung1 1
E-2. DP-Kabelabdeckung2 1
F. Stift 1
G. M4 × 14TP Schraube 8
H. Linke Scharnierabdeckung*1 1
I. Rechte Scharnierabdeckung*1 1
J. M3 × 8 Schraube SCHWARZ*1 1
K. Schild "Funktionsanweisung" 1
*: für metrische Angaben
**: für Angaben in Zoll
L. Warnschild "Originalschriftseite nach oben" 1
M. DP-Relaisleiterplatte *1 1
N. M3 × 8 Schraube*2 2
*1: nur DP-771/772 , *2: nur DP-772

Italiano

Parti fornite

A. DP 1
B. Tappetino originale 1
C. Accessorio di fissaggio (larghezza: 38,5 mm)
..... 2(DP-770(B))
1 (DP-771/772)
C*. Accessorio di fissaggio (larghezza: 45 mm)*1 1
D. Accessorio di regolazione angolare 1
E-1. Coperchio del cavo DP1 1
E-2. Coperchio del cavo DP2 1
F. Perno 1
G. Vite M4 × 14TP 8
H. Coperchio cerniera sinistra*1 1
I. Coperchio cerniera destra*1 1
J. Vite M3 × 8 NERA*1 1
K. Etichetta "Procedura di funzionamento" 1
*: per specifiche in unità del sistema metrico
**: per specifiche in pollici
L. Etichetta di avvertimento "Originale rivolto verso l'alto!" ... 1
M. Scheda a circuiti stampati di comunicazione DP*1 ... 1
N. Vite M3 × 8*2 2
*1: Solo DP-771/772 , *2: Solo DP-772

简体中文

附属品

A. DP..... 1
B. 原稿垫..... 1
C. 固定工具（宽 38.5mm）..... 2(DP-770(B))
1(DP-771/772)
C*. 固定工具（宽 45mm）*1..... 1
D. 角度限制工具 1
E-1. DP 电缆盖板 1 1
E-2. DP 电缆盖板 2 1
F. 销 1
G. M4×14TP 螺丝 8
H. 左部铰链盖板*1 1
I. 右部铰链盖板*1 1
J. M3×8 螺丝 BLACK*1 1
M. DP 中继板*1 1
N. M3×8 螺丝*2 2
*1: 仅限 DP-771/772
*2: 仅限 DP-772
(K) 和 (L) 并非附属品。

한국어

동봉품

A. DP..... 1
B. 원고매트..... 1
C. 고정쇠 (38.5mm 폭)..... 2(DP-770(B))
1(DP-771/772)
C*. 고정쇠 (45mm 폭) *1..... 1
D. 각도 고정쇠 1
E-1. DP 케이블커버 1..... 1
E-2. DP 케이블커버 2..... 1
F. 핀 1
G. 나사 M4×14TP 8
H. 힌지커버 좌*1..... 1
I. 힌지커버 우*1 1
J. 나사 M3×8BLACK*1 1
M. DP 중계기판*1 1
N. 나사 M3×8*2 2
*1: DP-771/772 만
*2: DP-772 만
(K) (L) 는 동봉되어 있지 않습니다 .

日本語

同梱品

A. DP..... 1
B. 原稿マット..... 1
C. 固定金具 (38.5mm 幅)..... 2(DP-770(B))
1(DP-771/772)
C*. 固定金具 (45mm 幅)*1..... 1
D. 角度規制金具 1
E-1. DP ケーブルカバー1..... 1
E-2. DP ケーブルカバー2..... 1
F. ピン 1
G. ビス M4×14TP..... 8
H. 左ヒンジカバー*1 1
I. 右ヒンジカバー*1 1
J. ビス M3×8BLACK*1..... 1
M. DP 中継基板*1..... 1
N. ビス M3×8*2..... 2
*1:DP-771/772 のみ
*2:DP-772 のみ
(K)(L) は、同梱されていない。

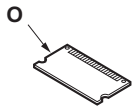

O. Memory DIMM (1GB)
(except 120V specification) 1
The memory DIMM must be expanded separately before using the “Dual scan function” on the DP-771.
Order a memory DIMM in the service parts.
For details, see the instructions on page 12.

O. Mémoire DIMM (1GB)
(sauf specifications 120V) 1
La mémoire DIMM doit être expansée séparément avant utilisation de la "Fonction double balay-age" du DP-771.
Commander une mémoire DIMM auprès du service des pièces de rechange.
Pour plus de précisions, se reporter aux instructions de la page 12.

O. Memoria DIMM (1GB)
(excepto especificaciones para 120V)..... 1
La memoria DIMM debe ampliarse de forma separada antes de utilizar la “Función de escaneado doble” del DP-771.
Realice un pedido de una memoria DIMM de repuesto.
Consulte las instrucciones de la página 12 para obtener información más detallada.

O. Speicher-DIMM (1GB)
(auser 120-V-Spezifikation) 1
Die DIMM-Speichermodule müssen separat aufgerüstet werden, bevor man die “Dual Scan Funk-tion” des DP-771 benutzt.
Bestellen Sie ein DIMM-Speichermodul zusammen mit den Serviceteilen.
Einzelheiten hierzu finden Sie in den Anleitungen auf Seite 12.

O. Memoria DIMM (1GB)
(eccetto per i modellicon specifica 120V) .. 1
La memoria DIMM deve essere espansa separatamente prima di usare la “Funzione di scansione dual” sull'unità DP-771.
Ordinare una memoria DIMM dalle parti di servizio.
per maggiori informazioni in merito si prega di leggere le istruzioni riportate a pagina 12.

---

0. 内存模组 DIMM (1GB)
(120V 型号以外) 1
在使用 DP-771 的「一次双面扫描功能」时，必需要增加内存卡。
请订购维修部件 DIMM 内存。
有关详情，请参阅第 12 页的说明。

---

0. 메모리 DIMM (1GB)
(120V 사양 이외) 1
DP-771 의 「양면동시 스캔기능」을 사용하는 경우에는 별도 메모리 DIMM 의 증설이 필요합니다 .
서비스 부품으로 메모리 DIMM 을 발주해 주십시오 .
상세는 12 페이지를 참조해 주십시오 .

---

0. メモリーDIMM(1GB)
(120V 仕様以外) 1
DP-771 の「両面同時読み込み機能」を使用する場合は、別途メモリーDIMM の増設が必要です。
サービスパーツでメモリーDIMM を発注してください。
詳細は 12 ページ参照のこと

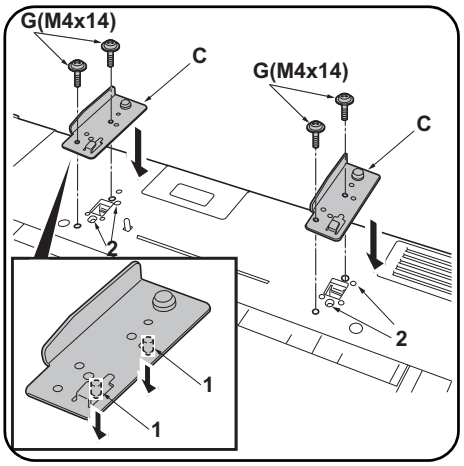

NOTICE
Be sure to remove any tape and/or cushioning materials from the parts supplied.
The illustrations of the DP in the Installation Guide are for DP-771/772.

Procedure
Before starting installation, be sure to turn the main power switch of the machine off, and unplug the power plug from the wall outlet.

Attach the fixing fitting (DP-770(B))
1. Align projections (1) of each fixing fitting (C) with holes (2) on the MFP and insert the fixing fittings (C) into the MFP.
2. Secure each fixing fitting (C) with two M4 x 14TP screws (G).

REMARQUE
Veillez à retirer les morceaux de bande adhésive et/ou les matériaux de rembourrage des pièces fournies.
Les schémas du DP dans le Guide d''installation concernent le DP-771/772.

Procédure
Avant de commencer l'installation, s'assurer de mettre la machine hors tension et de débrancher la fiche d'alimentation de la prise murale.

Mettre en place la fixation (DP-770(B))
1. Aligner les saillies (1) de chacune des pièces de fixation (C) avec les trous (2) sur le MFP et insérer ces pièces (C) dans le MFP.
2. Fixer chacune des pièces de fixation (C) avec deux vis M4 x 14TP (G).

AVISO
Asegúrese de quitar todas las cintas y/o material amortiguador de las partes suministradas.
Las ilustraciones del DP en la Guía de instalación corresponden al DP-771/772.

Procedimiento
Antes de iniciar la instalación, asegúrese de apagar el interruptor de encendido de la máquina y desenchufar el cable de alimentación de la toma de pared.

Monte el herraje de fijación (DP-770(B))
1. Alinee las salientes (1) de cada herraje de fijación (C) con los orificios (2) del MFP e inserte los herrajes de fijación (C) en el MFP.
2. Asegure cada uno de los herrajes de fijación (C) con dos tornillos M4 x 14TP (G).

ANMERKUNG
Stellen Sie sicher, dass sämtliche Klebebänder und/oder Polstermaterial von den gelieferten Teilen entfernt wurden.
Die Abbildungen des DP in der Installationsanleitung gelten für Modell DP-771/772.

Vorgehensweise
Bevor Sie mit der Installation beginnen überzeugen Sie sich, dass der Netzschalter des Geräts ausgeschaltet und das Stromkabel aus der Steckdose gezogen ist.

Anbringen der Befestigungshalterung (DP-770(B))
1. Die Zapfen (1) jeder Befestigungshalterung (C) mit den Öffnungen (2) am MFP ausrichten und die Befestigungshalterungen (C) in den MFP einsetzen.
2. Jede Befestigungshalterung (C) mit zwei M4 x 14TP Schrauben (G) befestigen.

AVVISO
Rimuovere tutti i nastri adesivi e/o i materiali di protezione dalle parti fornite.
Le illustrazioni del DP nella Guida all'installazione sono per il modello DP-771/772.

Procedura
Prima di iniziare l'installazione, spegnere la macchina e scollegare la spina dalla presa di corrente.

Applicazione dell'accessorio di fissaggio (DP-770(B))
1. Allineare le sporgenze (1) di ogni accessorio di fissaggio (C) con i fori (2) sull'MFP, ed inserire gli accessori di fissaggio (C) nell'MFP.
2. Bloccare ogni accessorio di fissaggio (C) con le due viti M4 x 14TP (G).

注意
如果附属品上带有固定胶带，缓冲材料时务必揭下。
安装手册中关于 DP 的图示以 DP-771/772 为例。

安装步骤
安装前务必关闭机器的主电源开关，并从墙壁插座拔下电源插头。

安装固定工具（DP-770(B)）
1. 将各固定工具（C）上的突出部分（1）与 MFP 上的孔（2）对齐，然后将固定工具（C）插入 MFP 中。
2. 用两颗 M4×14TP 螺丝（G）固定各固定工具（C）。

주의
동봉품에 고정 테이프，완충재가 붙어 있는 경우에는 반드시 제거하십시오．
설치순서에 기재되어 있는 DP 일러스트는 DP-771/772 입니다．

설치순서
설치를 시작하기 전에 반드시 본체의 주 전원 스위치를 끄고 벽 콘센트에서 전원 플러그를 분리하십시오．

고정쇠의 부착 (DP-770(B))
1. 고정쇠 (C) 의 돌기 (1) 와 MFP 의 구멍 (2) 을 맞추고 MFP 에 고정쇠 (C) 를 꽂습니다．
2. 나사 M4×14TP(G) 각 2 개로 2 개의 고정쇠 (C) 를 고정합니다．

注意
同梱品に固定テープ、緩衝材が付いている場合は必ず取り外すこと。
設置手順書に記載している DP のイラストは、DP-771/772 です。

取付手順
必ず機械本体の主電源スイッチを OFF にし、機械本体の電源プラグを抜いてから作業すること。

固定金具の取り付け(DP-770(B))
1. 固定金具 (C) の突起 (1) と MFP の穴 (2) を合わせ、MFP に固定金具 (C) を差し込む。
2. ビス M4×14TP(G) 各 2 本で 2 つの固定金具 (C) を固定する。

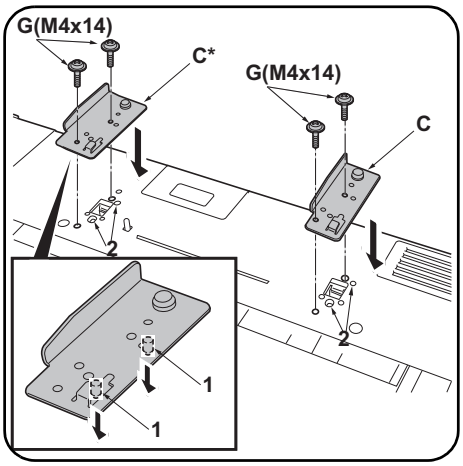

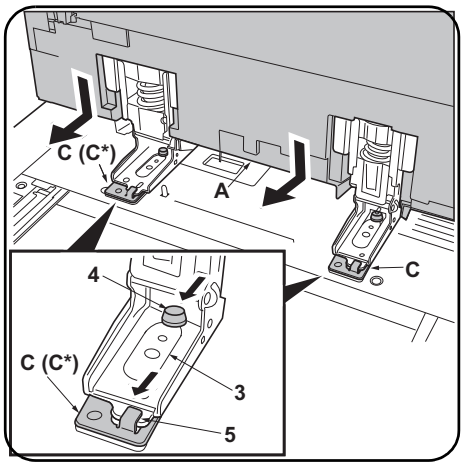

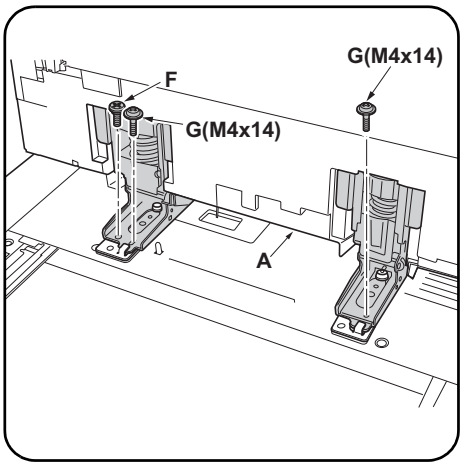

Attach the fixing fitting (DP-771/772)

1. Align the projections (1) on the right fixing fitting (C) and on the wider left fixing fitting (C*) with the respective holes (2) in the MFP and then insert the fixing fittings into the MFP.
2. Secure each of the fixing fittings (C) (C*) with 2 M4 × 14TP screws (G).

Install the DP

3. Align hinge hole (3) of DP (A) with pin (4) of fixing fitting (C), place DP (A) on the MFP.
4. Slide the DP (A) toward the front side and engage hinges into hooks (5) on fixing fittings (C).

5. Install DP (A) onto the MFP securely with pin (F) and two M4 × 14TP screws (G).

Mettre en place la fixation (DP-771/772)

1. Aligner les saillies (1) de la fixation droite (C) et de la fixation gauche plus large (C*) avec les trous correspondants (2) du MFP et insérer les fixations dans le MFP.
2. Fixer chaque des fixations (C) (C*) avec 2 vis TP M4 × 14 (G).

Installer le DP

3. Aligner le trou de la charnière (3) du DP (A) sur la goupille (4) de la fixation (C) et placer le DP (A) sur le MFP.
4. Faire glisser le DP (A) vers l'avant et engager les charnières dans les crochets (5) sur les pièces de fixation (C).

5. Installer le DP (A) sur le MFP en le fixant à l'aide de la goupille (F) et des deux vis TP M4 × 14 (G).

Monte el herraje de fijación (DP-771/772)

1. Alinee los salientes (1) del herraje de fijación derecho (C) y del herraje de fijación izquierdo más ancho (C*) con los orificios correspondientes (2) del MFP y, después, inserte los herrajes de fijación en el MFP.
2. Asegure cada uno de los herrajes de fijación (C) (C*) con 2 tornillos TP M4 × 14 (G).

Instale el DP

3. Alinee el orificio de bisagra (3) del DP (A) con el pasador (4) del herraje de fijación (C) y coloque el DP (A) en el MFP.
4. Deslice el DP (A) hacia el frente y enganche las bisagras en los ganchos (5) de los herrajes de fijación (C).

5. Instale el DP (A) firmemente en el MFP con el pasador (F) y dos tornillos TP M4 × 14 (G).

Anbringen der Befestigungshalterung (DP-771/772)

1. Die Zapfen (1) an der rechten Befestigungshalterung (C) und an der breiteren Befestigungshalterung (C*) mit den entsprechenden Öffnungen (2) am MFP ausrichten und die Befestigungshalterungen in den MFP einsetzen.
2. Die Befestigungshalterungen (C) (C*) mit den 2 M4 × 14TP Schrauben (G) befestigen.

Installieren des DP

3. Scharnierloch (3) des DP (A) mit Stift (4) der Befestigungshalterung (C) ausrichten, und DP (A) auf den MFP stellen.
4. Den DP (A) nach vorne hin verschieben und die Scharniere in die Haken (5) an den Befestigungshalterungen (C) einsetzen.

5. DP (A) sicher mit einem Stift (F) und zwei M4 × 14TP Schrauben (G) am MFP befestigen.

Applicazione dell'accessorio di fissaggio (DP-771/772)

1. Allineare le sporgenze (1) sull'accessorio di fissaggio destro (C) e sull'accessorio di fissaggio sinistro più largo (C*) con i rispettivi fori (2) nell'MFP, e quindi inserire gli accessori di fissaggio nell'MFP.
2. Fissare ciascuno degli accessori di fissaggio (C) (C*) con 2 viti M4 × 14TP (G).

Montaggio del DP

3. Allineare il foro della cerniera (3) del DP (A) con il perno (4) dell'accessorio di fissaggio (C), quindi posizionare il DP (A) sull'MFP.
4. Far scorrere il DP (A) verso il lato anteriore ed inserire le cerniere nei ganci (5) sugli accessori di fissaggio (C).

5. Montare il DP (A) sull'MFP assicurandolo con il perno (F) e due viti M4 × 14TP (G).

安装固定工具 (DP-771/772)

1. 将固定工具 (C) 从右侧、宽幅固定夹具 (C*) 从左侧将各自的突出部分 (1) 与 MFP 的孔 (2) 对齐并插入到 MFP 中。
2. 使用各 2 颗 M4×14 螺丝 TP(G) 来固定固定工具 (C) 与固定工具 (C*)

安装 DP

3. 将 DP（A）的铰链孔（3）对准固定工具（C）的销（4），并将 DP（A）放在 MFP 上。
4. 朝前侧滑动 DP（A），然后将铰链与固定工具（C）上的卡扣（5）相啮合。

5. 用销（F）和两颗 M4×14TP 螺丝（G）将 DP（A）安装到 MFP 上。

고정쇠의 부착 (DP-771/772)

1. 우측에 고정쇠 (C), 좌측에 광폭 고정쇠 (C*) 각각의 돌기 (1) 와 MFP 구멍 (2) 을 맞추고 MFP 에 꽂습니다 .
2. 나사 M4×14TP(G) 각 2 개로 고정쇠 (C) 와 고정쇠 (C*) 를 고정합니다 .

DP 부착

3. DP(A) 의 힌지부 구멍 (3) 과 고정쇠 (C) 핀 (4) 을 맞추고 MFP 에 DP(A) 를 올립니다 .
4. .DP(A) 를 밀어 힌지부를 고정쇠 (C) 의 걸쇠 (5) 에 끼웁니다 .

5. 핀 (F) 1 개와 나사 M4×14TP(G) 2 개로 DP(A) 를 MFP 에 고정합니다 .

固定金具の取り付け(DP-771/772)

1. 右側に固定金具 (C)、左側に幅広の固定金具 (C*) のそれぞれの突起 (1) と MFP の穴 (2) を合わせ、MFP に差し込む。
2. ビス M4×14TP(G) 各 2 本で固定金具 (C) と固定金具 (C*) を固定する。

DP の取り付け

3. DP(A) のヒンジ部の穴 (3) と固定金具 (C) のピン (4) を合わせ、MFP に DP(A) を乗せる。
4. DP(A) を手前にスライドさせ、ヒンジ部を固定金具 (C) の引っ掛け部 (5) にはめ込む。

5. ピン (F)1 本とビス M4×14TP(G)2 本で DP(A) を MFP に固定する。

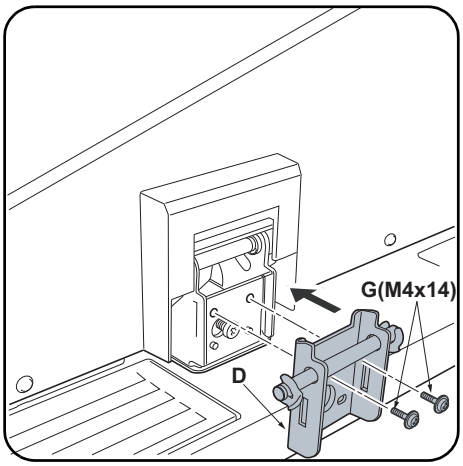

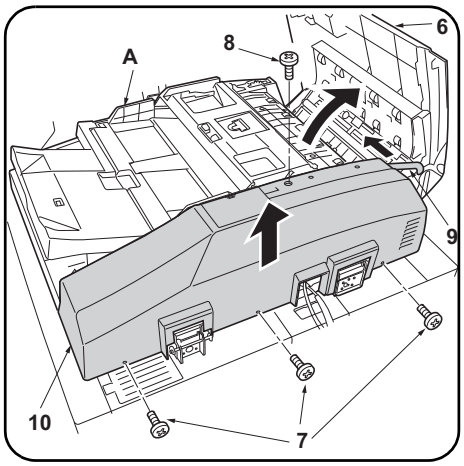

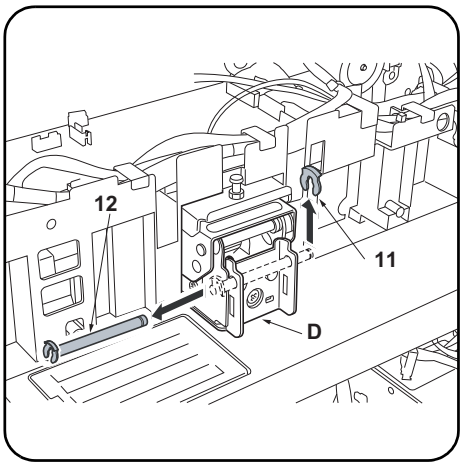

Install the angle control fitting
To adjust DP open-close angle 60 degrees

6. Install angle control fitting (D) at the rear side of the right hinge with two M4 × 14TP screws (G).

To adjust DP open-close angle 30 degrees

7. Open the upper cover (6) of the DP (A).
8. Remove the four screws (7) and (8) . Remove the strap (9) from the rear cover (10). Remove the rear cover (10) of the DP (A)

9. Remove stop ring (11) of angle control fitting (D) that has been installed in step 6 to remove shaft (12).

Installer la fixation d'angle
Pour régler l'angle d'ouverture/de fermeture du DP de 60 degrés

6. Placer la fixation d'angle (D) à l'arrière de la charnière droite à l'aide des deux vis TP M4 × 14 (G).

Pour régler l'angle d'ouverture/de fermeture du DP de 30 degrés

7. Ouvrir le couvercle supérieur (6) du DP (A).
8. Retirer les quatre vis (7) et (8).Retirer la courroie (9) du couvercle arrière (10).Retirer la couvercle arrière (10) du DP (A).

9. Retirer l'anneau de butée (11) de la fixation d'angle (D) installée à l'étape 6 pour enlever la tige (12).

Instale el herraje de control de ángulo
Para ajustar el DP, abra o cierre el ángulo 60 grados

6. Instale el herraje de control de ángulo (D) en el lado trasero de la bisagra derecha con dos tornillos TP M4 × 14 (G).

Para ajustar el DP, abra o cierre el ángulo 30 grados

7. Abra la cubierta superior (6) del DP (A).
8. Quite los cuatro tornillos (7) y (8).Retire la correa (9) de la cubierta posterior (10).Quite la cubierta posterior (10) del DP (A).

9. Retire el anillo de retención (11) del herraje de control de ángulo (D) que se instaló en el paso 6 para retirar el eje (12).

Installieren der Winkeleinstellbefestigung
Einstellen des Öffnungs-/Schließungswinkels des DP um 60 Grad

6. Winkeleinstellbefestigung (D) an der Rückseite des rechten Scharniers mit zwei M4 × 14TP Schrauben (G) befestigen.

Einstellen des Öffnungs-/Schließungswinkels des DP um 30 Grad

7. Die obere Abdeckung (6) des DP (A) öffnen.
8. Entfernen Sie die vier Schrauben (7) und (8).Entfernen Sie den Riemen (9) der hinteren Abdeckung (10).Entfernen Sie die hintere Abdeckung (10) des DP (A).

9. Anschlagring (11) von der Winkeleinstellbefestigung (D) abnehmen, die in Schritt 6 montiert wurde, um die Welle (12) zu entfernen.

Montaggio dell'accessorio di regolazione angolare
Per regolare l'angolo di chiusura / apertura del DP a 60 gradi

6. Montare l'accessorio di regolazione angolare (D) sul lato posteriore della cerniera destra con due viti M4 × 14TP (G).

Per regolare l'angolo di chiusura / apertura del DP a 30 gradi

7. Aprire il pannello superiore (6) del DP (A).
8. Togliere le quattro viti (7) e (8).Rimuovere la cinghietta (9) dal coperchio posteriore (10).Rimuovere il coperchio posteriore (10) del DP (A).

9. Rimuovere l'anello di bloccaggio (11) dell'accessorio di regolazione angolare (D) che era stato installato al Punto 6 per rimuovere l'albero (12).

安装角度限制工具
若要将 DP 的开关角度调整为 60 度

6. 在右部铰链的后部使用两颗 M4×14TP 螺丝（G）安装角度限制工具（D）。

若要将 DP 的开关角度调整为 30 度

7. 打开 DP（A）的上盖板（6）。
8. 取下 4 颗螺丝（7），(8)。从后盖板（10）上取下塑料片（9）。取下 DP(A) 的后盖板（10）。

9. 拆下在第 6 步中安装的角度控制配件（D）的止动环（11），以将轴（12）拆下。

각도 고정쇠의 부착
DP 개폐각도를 60 도로 설정하는 경우

6. 우 힌지 뒷측에 나사 M4×14TP(G) 2 개로 각도 고정쇠 (D) 를 부착합니다 .

DP 개폐 각도를 30 도로 설정하는 경우

7. DP(A) 의 DP 윗커버 (6) 를 엽니다 .
8. 나사 (7), (8) 4 개를 제거합니다 . 스트랩 (9) 를 후면 커버 (10) 에서 제거합니다 .DP(A) 의 후면 커버 (10) 를 제거합니다 .

9. 스텝 6 에서 부착한 각도 고정쇠 (D) 의 스톱링 (11) 1 개를 제거하고 샤프트 (12) 를 제거합니다 .

角度規制金具の取り付け
DP 開閉角度を 60 度に設定する場合

6. 右ヒンジ後側にビス M4×14TP(G)2 本で角度規制金具 (D) を取り付ける。

DP 開閉角度を 30 度に設定する場合

7. DP(A) の DP 上カバー(6) を開く。
8. ビス (7)、(8) 4 本を外す。ストラップ (9) を後カバー(10) から外す。DP(A) の後カバー (10) を取り外す。

9. 手順 6 で取り付けた角度規制金具 (D) のストップリング (11)1 個を外し、シャフト (12) を取り外す。

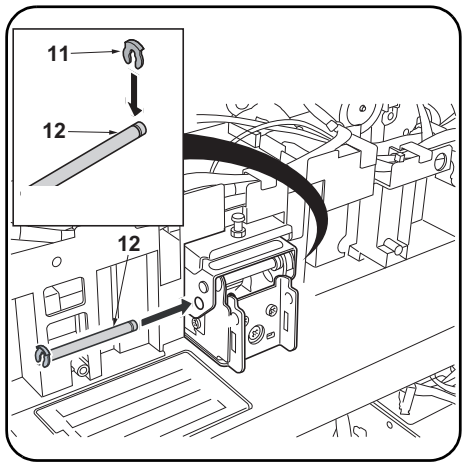

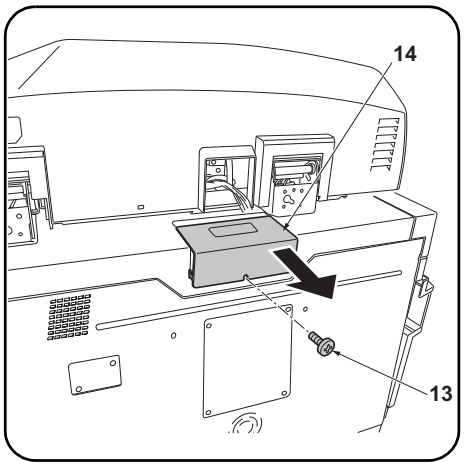

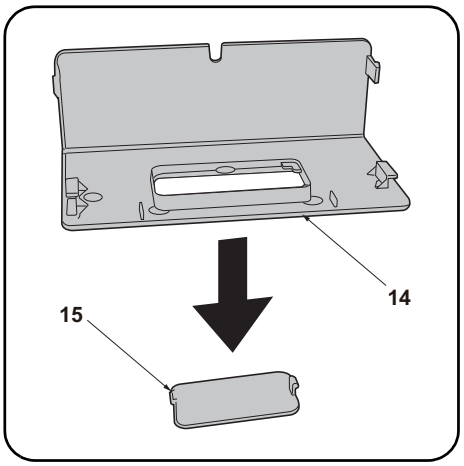

10. Insert shaft (12) into the rear side of the right hinge.
11. Attach stop ring (11) to the notch of shaft (12) and secure shaft (12).
12. Reinstall the rear cover (10) using the four screws (7) and (8) removed in step 8.Attach the strap (9) in the rear cover (10).Close the upper cover (6) of the DP (A).

Connect the DP signal line (DP-770(B) only)
For the DP-771/772, proceed to step 13 on page 8.
13. Remove the screw (13) and remove the DP cable connection cover (14).

14. Remove the DP cable connection cap (15) from the DP cable connection cover (14).

---

10. Insérer la tige (12) à l'arrière de la charnière droite.
11. Fixer l'anneau de butée (11) sur l'encoche de la tige (12) et mettre en place la tige (12).
12. Remonter la couvercle arrière (10) à l'aide des quatre vis (7) et (8) retirées à l'étape 8.Fixer la courroie (9) dans le couvercle arrière (10).Refermer le couvercle supérieur (6) du DP (A).

Raccorder le circuit de transmission (DP-770(B) uniquement)
Pour le DP-771/772, passer à l'étape 13 en page 8.
13. Déposer la vis (13) et déposer le couvercle de la connexion du câble du DP (14).

14. Déposer le chapeau de la connexion du câble du DP (15) du couvercle de la connexion du câble du DP (14).

---

10. Inserte el eje (12) en el lado trasero de la bisagra derecha.
11. Fije el anillo de retención (11) a la muesca del eje (12) y asegure el eje (12).
12. Vuelva a colocar la cubierta posterior (10) con los cuatro tornillos (7) y (8) que quitó en el paso 8.Coloque la correa (9) de la cubierta posterior (10).Cierre la cubierta superior (6) del DP (A).

Conecte la línea de señales del DP (DP-770(B) solamente)
Para el DP-771/772, vaya al paso 13 de la página 8.
13. Quite el tornillo (13) y quite la cubierta de conexión del cable del DP (14).

14. Quite la tapa de conexión del cable del DP (15) de la cubierta de conexión del cable del DP (14)

---

10. Welle (12) in die Rückseite des rechten Scharniers einsetzen.
11. Anschlagring (11) an der Wellenkerbe (12) anbringen und Welle befestigen (12).
12. Bringen Sie die hintere Abdeckung (10) wieder an. Benutzen Sie die vier Schrauben (7) und (8) aus Schritt 8.Befestigen Sie den Riemen (9) der hinteren Abdeckung (10).Schließen Sie die obere Abdeckung (6) des DP (A).

Anschließen der DP-Signalleitungen (nur DP-770(B))
Beim DP-771/772 weitergehen zu Schritt 13 auf Seite 8.
13. Die Schraube (13) entfernen und die Abdeckung (14) des DP-Kabelanschlusses abnehmen.

14. Die Kappe (15) des DP-Kabelanschlusses von der Abdeckung (14) des DP-Kabelanschlusses abnehmen.

---

10. Inserire l'albero (12) nella parte posteriore della cerniera destra.
11. Applicare l'anello di bloccaggio (11) nell'incavo dell'albero (12) e assicurare l'albero (12).
12. Rimontare il coperchio posteriore (10) utilizzando le quattro viti (7) e (8) rimosse al punto 8.Rimontare la cinghietta (9) sul coperchio posteriore (10).Chiudere il pannello superiore (6) del DP (A).

Collegare la linea del segnale DP (solo DP-770(B))
Per il DP-771/772, procedere al passo 13 a pagina 8.
13. Rimuovere la vite (13) e quindi rimuovere il coperchio di la connessione del cavo DP (14).

14. Rimuovere il cappuccio (15) per la connessione del cavo DP dal coperchio di connessione del cavo DP (14).

---

10. 将轴（12）插入到右部铰链的后部。
11. 将止动环（11）安装到轴（12）的切口并将轴（12）固定。
12. 使用步骤 8 中取下的 4 颗螺丝（7），(8) 来按原样安装后盖板（10）。把塑料片（9）安装到后盖板（10）。关闭 DP(A) 的 DP 上盖板（6）。

连接 DP 信号线（仅限 DP-770(B)）
DP-771/772 跳至 P8 的步骤 13。
13. 拆除 1 颗螺丝（13），拆下 DP 电缆连接盖板（14）。

14. 从 DP 电缆连接盖板（14）上拆下 DP 电缆连接用盖（15）。

---

10. 우 힌지 뒷측에 샤프트 (12) 를 삽입합니다 .
11. 스톱링 (11) 을 샤프트 (12) 의 노치에 부착하고 샤프트 (12) 를 고정합니다 .
12. 순서 8 에서 제거한 나사 (7),(8) 4 개를 사용하여 후면 커버 (10) 를 원래대로 부착합니다 . 스트랩 (9) 을 후면 커버 (10) 에 부착합니다 .DP(A) 의 DP 윗 커버 (6) 를 닫습니다 .

DP 신호선의 접속 (DP-770(B) 만)
DP-771/772 은 P8 의 순서 13 으로 진행 .
13. 나사 (13) 1 개를 빼고 DP 케이블 연결 커버 (14) 를 제거합니다 .

14. DP 케이블 연결 커버 (14) 에서 DP 케이블 연결 캡 (15) 을 제거합니다 .

---

10. 右ヒンジ後側にシャフト（12）を挿入する。
11. ストップリング（11）をシャフト（12）の溝に取り付け、シャフト（12）を固定する。
12. 手順 8 で外したビス（7）、(8) 4 本で後カバー(10) を元通り取り付ける。ストラップ（9）を後カバー(10) に取り付ける。DP(A) の DP 上カバー(6) を閉じる。

DP 信号線の接続(DP-770(B) のみ)
DP-771/772 は P8 の手順 13 へ進む。
13. ビス（13)1 本を外して、DP ケーブル接続カバー(14) を外す。

14. DP ケーブル接続カバー(14) から DP ケーブル接続用フタ（15）を取り外す。

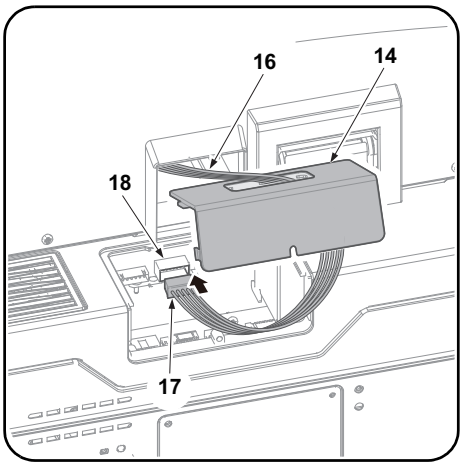

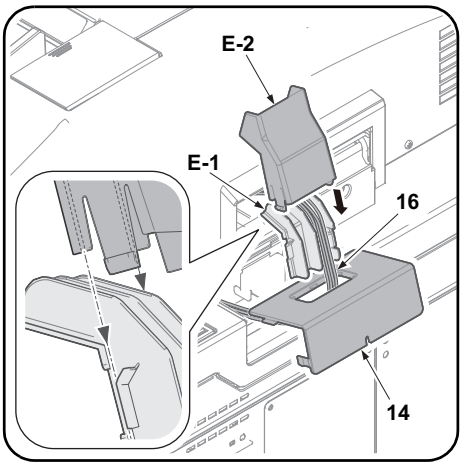

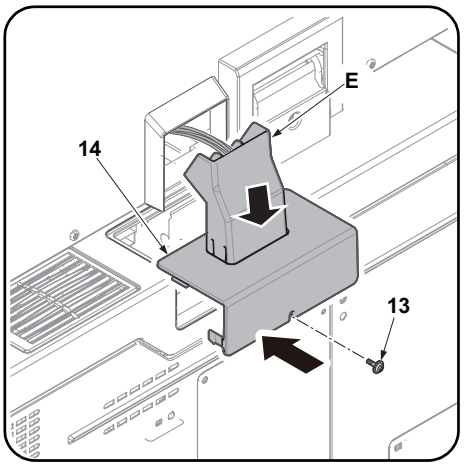

15. Pass the DP signal line cable (16) through the hole in DP cable connection cover (14). Connect the DP signal line connector (17) to the connector (18) of the ISC PWB.

16. Pass the DP signal line cable (16) along the groove in the DP cable cover 1 (E-1). Install the DP cable cover 2 (E-2).

17. Attach the DP cable cover (E) to the DP cable connection cover (14) and install the DP cable connection cover (14) using the screw (13) removed in step 13.
Proceed to step 27 on page 13

---

15. Passez le câble de la ligne du signal DP (16) dans le trou du couvercle de connexion du câble DP (14).Raccordez le connecteur de ligne de signal DP (17) sur le connecteur (18) de l'ISC PWB.

16. Passez le câble de la ligne du signal DP (16) dans la rainure du couvercle 1 du câble DP (E-1). Installez le couvercle 2 du câble DP (E-2).

17. Fixer le couvercle du câble du DP (E) sur le couvercle de la connexion du câble du DP (14) et installer le couvercle de la connexion du câble du DP (14) à l'aide de la vis (13) déposée à l'étape 13.
Passer à l'étape 27 de la page 13.

---

15. Pase el cable de línea de señales del DP (16) por el orificio de la cubierta de conexión de cables del DP (14).Conecte el conector de línea de señales del DP (17) al conector (18) de ISC PWB.

16. Pase el cable de línea de señales del DP (16) a lo largo de la ranura de la cubierta de cables 1 del DP (E-1).Instale la cubierta de cables 2 del DP (E-2).

17. Fije la cubierta del cable del DP (E) a la cubierta de conexión del cable del DP (14) e instale la cubierta de conexión del cable del DP (14) usando el tornillo (13) quitado en el paso 13.
Vaya al paso 27 de la página 13.

---

15. Führen Sie die Signalleitung (16) des DP durch die Öffnung der Steckerabdeckung (14) des DP.Verbinden Sie den Stecker der Signalleitung (17) des DP mit dem Steckverbinder (18) der ISC-Platine.

16. Führen Sie die Signalleitung (16) des DP durch die Nut der Steckerabdeckung 1 (E-1) des DP.Befestigen Sie die Steckerabdeckung 2 (E-2) des DP.

17. Die DP-Kabelabdeckung (E) an der Abdeckung (14) des DP-Kabelanschlusses anbringen und die Abdeckung (14) des DP-Kabelanschlusses mittels der in Schritt 13 entfernten Schraube (13) befestigen.
Weitergehen zu Schritt 27 auf Seite 13.

---

15. Far passare il cavo di linea del segnale DP (16) nel foro presente sul coperchio del connettore cavo DP (14). Collegare il connettore di linea del segnale DP (17) al connettore (18) della scheda ISC PWB.

16. Far passare il cavo di linea del segnale DP (16) lungo la scanalatura sul coperchio del cavo DP 1 (E-1).Installare il coperchio del cavo DP 2 (E-2).

17..Fissare il coperchio del cavo DP (E) al coperchio di connessione del cavo DP (14), e quindi installare il coperchio di connessione del cavo DP (14) utilizzando la vite (13) rimossa nel passo 13.
Procedere al passo 27 a pagina 13.

---

15. 将 DP 信号线 (16) 穿过 DP 电缆连接盖板 (14) 的孔。把 DP 信号线的接插件 (17) 和 ISC 电路板的接插件 (18) 相连接。

16. 将 DP 信号线 (16) 穿过 DP 电缆盖板 1 (E-1) 的槽中。安装 DP 电缆盖板 2 (E-2)。

17. 将 DP 电缆盖板 (E) 安装到 DP 电缆连接盖板 (14) 上，使用步骤 13 中拆下的 1 颗螺丝 (13) 来安装 DP 电缆连接盖板 (14)。
跳至 P13 的步骤 27。

---

15. DP 시그널 라인 케이블 (16) 을 DP 케이블 접속커버 (14) 의 구멍으로 통과시킵니다 .DP 신호 신호선 커넥터 (17) 를 ISC PWB 의 커넥터 (18) 에 연결합니다 .

16. DP 케이블 커버 1(E-1) 의 홈을 따라 DP 시그널 라인 케이블 (16) 을 통과시킵니다 . DP 케이블 커버 2(E-2) 를 설치합니다 .

17. DP 케이블 커버 (E) 를 DP 케이블 접속커버 (14) 에 부착하고 순서 13 에서 제거한 나사 (13) 1 개로 DP 케이블 접속커버 (14) 를 부착합니다 .
P13 의 순서 27 로 진행 .

---

15. DP ケーブル接続カバー(14) の穴に DP 信号線 (16) を通す。DP 信号線コネクター(17) を ISC 基板のコネクター(18) に接続する。

16. DP ケーブルカバー1(E-1) の溝に DP 信号線 (16) を通す。DP ケーブルカバー2(E-2) を取り付ける。

17. DP ケーブルカバー(E) を DP ケーブル接続カバー(14) に取り付け、手順 13 で外したビス (13)1 本で DP ケーブル接続カバー(14) を取り付ける。
P13 の手順 27 へ進む。

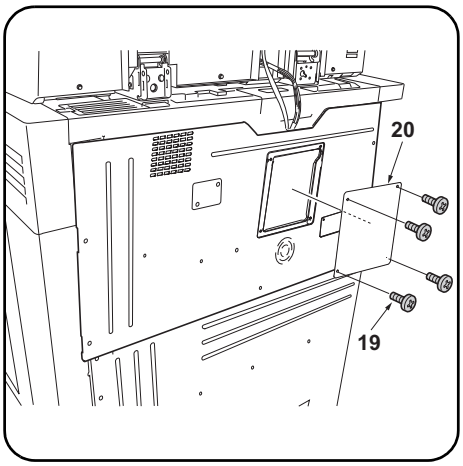

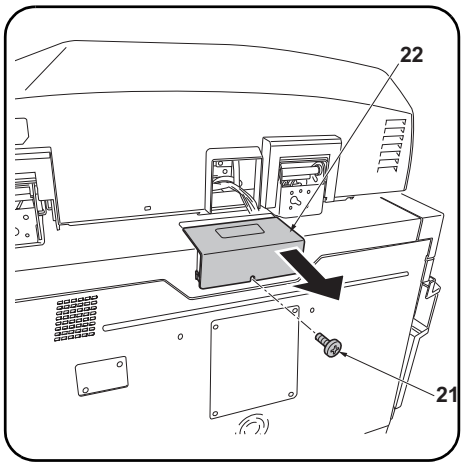

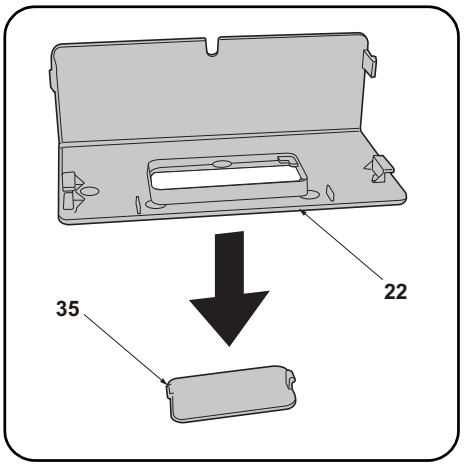

Connect the DP signal line (DP-771/772 only)

13. Remove the 4 screws (19).Remove the DP relay PWB cover (20).

14. Remove the screw (21) and remove the DP cable connection cover (22).

15. Remove the DP cable connection cap (35) from the DP cable connection cover (22).

Raccorder le circuit de transmission (DP-771/772 uniquement)

13. Retirez les 4 vis (19).Retirer le couvercle du circuit imprimé du relais du DP (20).

14. Déposer la vis (21) et déposer le couvercle de la connexion du câble du DP (22).

15. Déposer le chapeau de la connexion du câble du DP (35) du couvercle de la connexion du câble du DP (22).

Conecte la línea de señales del DP (DP-771/772 solamente)

13. Quite los 4 tornillos (19).Retire la cubierta de PWB del relé del DP (20).

14. Quite el tornillo (21) y quite la cubierta de conexión del cable del DP (22).

15. Quite la tapa de conexión del cable del DP (35) de la cubierta de conexión del cable del DP (22).

Anschließen der DP-Signalleitungen (nur DP-771/772)

13. Entfernen Sie die 4 Schrauben (19).Entfernen Sie die Abdeckung (20) der DP-Verbindungsplatine zum Vorlageneinzug.

14. Die Schraube (21) entfernen und die Abdeckung (22) des DP-Kabelanschlusses abnehmen.

15. Die Kappe (35) des DP-Kabelanschlusses von der Abdeckung (22) des DP-Kabelanschlusses abnehmen.

Collegare la linea del segnale DP (solo DP-771/772)

13. Togliere le 4 viti (19).Rimuovere la scheda a circuiti stampati di comunicazione DP (20).

14. Rimuovere la vite (21) e quindi rimuovere il coperchio di la connessione del cavo DP (22).

15. Rimuovere il cappuccio (35) per la connessione del cavo DP dal coperchio di connessione del cavo DP (22).

连接 DP 信号线（仅限 DP-771/772）

13. 拆除 4 颗螺丝 (19)。取下 DP 中继板的盖板 (20)。

14. 拆除 1 颗螺丝 (21)，拆下 DP 电缆连接盖板 (22)。

15. 从 DP 电缆连接盖板 (22) 上拆下 DP 电缆连接用盖 (35)。

DP 시그널 라인 연결 (DP-771/772 만)

13. 나사 (19) 4 개를 제거합니다 .
DP 중계기판 커버 (20) 를 제거합니다 .

14. 나사 (21) 1 개를 제거한 루 DP 케이블 연결 캡 (22) 을 제거합니다 .

15. DP 케이블 연결 커버 (22) 에서 DP 케이블 연결 캡 (35) 을 제거합니다 .

DP 信号線の接続(DP-771/772 のみ)

13. ビス (19)4 本を外す。DP 中継基板カバー (20) を取り外す。

14. ビス (21)1 本を外して、DP ケーブル接続カバー(22) を外す

15. DP ケーブル接続カバー(22) から DP ケーブル接続用フタ (35) を取り外す。

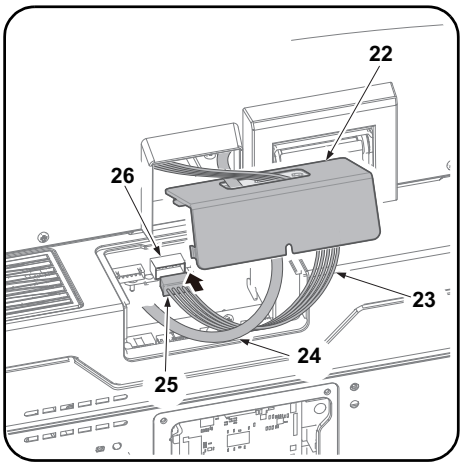

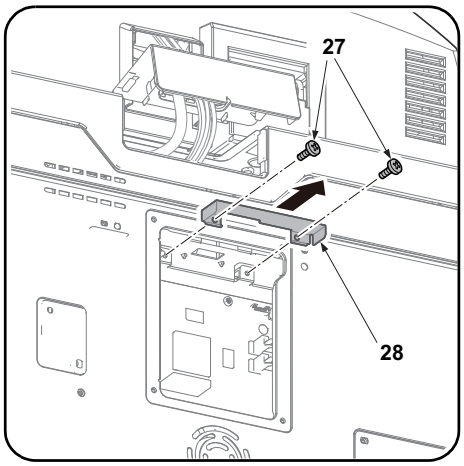

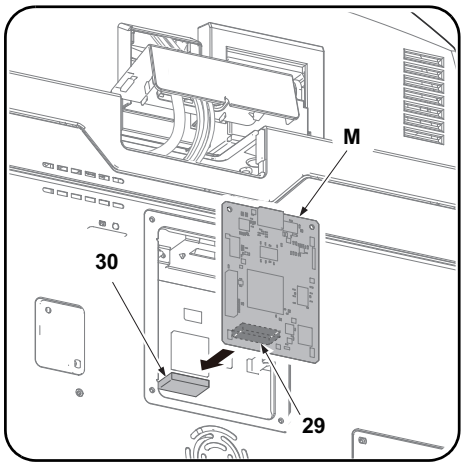

16. Pass the DP signal line cable (23) and the CIS data line cable (24) through the hole in DP cable connection cover (22).Connect the DP signal line connector (25) to the connector (26) of the ISC PWB.

DP-771 only

17. Remove the two screws (27).Remove the bracket (28).

Installing the DP relay PWB

18. Connect connector (29) on the DP relay PWB (M) to connector (30) on the MFP.

---

16. Passez le câble de ligne de signal DP (23) et le câble de ligne de données CIS (24) dans le trou du couvercle de connexion du câble DP (22). Raccordez le connecteur de ligne de signal DP (25) sur le connecteur (26) de l'ISC PWB.

DP-771 uniquement

17. Retirez les deux vis (27).Retirez le support (28).

Installation de la carte de circuit imprimé relais du DP

18. Raccorder le connecteur (29) sur la carte de circuit imprimé relais du DP (M) au connecteur (30) sur le MFP.

---

16. Pase el cable de línea de señales del DP (23) y el cable de línea de datos de CIS (24) por el orificio de la cubierta de conexión de cables del DP (22). Conecte el conector de línea de señales del DP (25) al conector (26) de ISC PWB.

DP-771 solamente

17. Quite los dos tornillos (27).Quite la abrazadera (28).

Instalación del PWB del relé del DP

18. Conecte el conector (29) del PWB del relé del DP (M) al conector (30) del MFP.

---

16. Führen Sie die Signalleitung (23) des DP und die Datenleitung der CIS (24) durch die Öffnung der Steckerabdeckung (22) des DP. Verbinden Sie den Stecker der Signalleitung (25) des DP mit dem Steckverbinder (26) der ISC-Platine.

nur DP-771

17. Entfernen Sie die beiden Schrauben (27).Entfernen Sie die Klammer (28).

Installieren der DP-Relaisleiterplatte

18. Den Stecker (29) an der DP-Relaisleiterplatte (M) mit dem Stecker (30) am MFP verbinden

---

16. Far passare il cavo di linea del segnale DP (23) e il cavo di linea dei dati CIS (24) nel foro presente sul coperchio del connettore del cavo DP (22). Collegare il connettore di linea del segnale DP (25) al connettore (26) della scheda ISC PWB.

Solo DP-771

17. Togliere le due viti (27).Rimuovere la staffa (28).

Installazione della scheda a circuiti stampati di comunicazione DP

18. Collegare il connettore (29) sulla scheda a circuiti stampati di comunicazione DP (M) al connettore (30) sull'MFP.

---

16. 将 DP 信号线（23）和 CIS 数据线（24）穿过 DP 电缆连接盖板（22）的孔。把 DP 信号线的接插件（25）和 ISC 电路板的接插件（26）相连接。

仅限 DP-771

17. 拆下 2 颗螺丝（27）。卸下金属板（28）。

安装 DP 中继板

18. 将 DP 中继板（M）上的接插件（29）连接至 MFP 上的接插件（30）。

---

16. DP 시그널 라인 케이블 (23) 과 CIS 데이터 라인 케이블 (24) 을 DP 케이블 연결 커버 (22) 의 구멍에 통과시킵니다 . DP 시그널 라인 커넥터 (25) 를 ISC PWB 의 커넥터 (26) 에 연결합니다 .

DP-771 만

17. 나사 (27) 2 개를 제거합니다 . 브래킷 (28) 을 제거합니다 .

DP 중계기판의 부착

18. DP 중계기판 (M) 의 커넥터 (29) 를 MFP 의 커넥터 (30) 에 연결합니다 .

---

16. DP ケーブル接続カバー(22) の穴に DP 信号線 (23) と CIS データ線(24)を通す。DP 信号線コネクター(25) を ISC 基板のコネクター(26) に接続する。

DP-771 のみ

17. ビス (27)2 本を外す。板金 (28) を外す。

DP 中継基板の取り付け

18. DP 中継基板 (M) のコネクター(29) を、MFP のコネクター(30) に接続する。

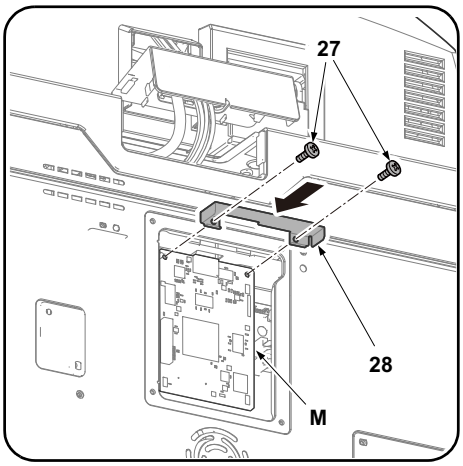

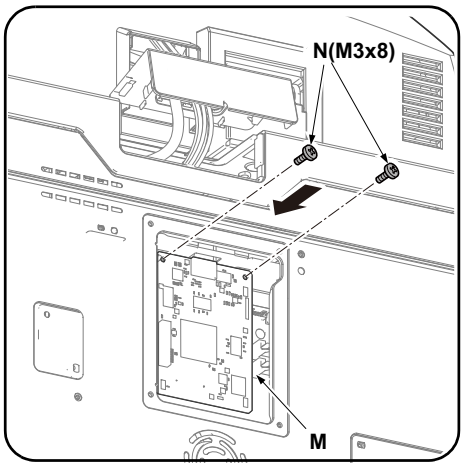

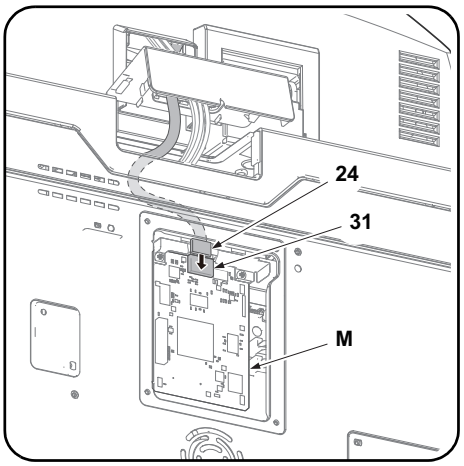

DP-771 only

19. Secure the DP relay PWB (M). Secure it with the bracket (28) and the two screws (27) removed in step 17.

DP-772 only

19. Secure the DP relay PWB (M). Secure it with the two M3 × 8 screws (N) supplied with the DP-772.

20. Plug the CIS data line (24) into the connetor (31) on the DP relay PWB (M).

DP-771 uniquement

19. Fixez la DP relay PWB (M). Fixez-la avec le support (28) et les deux vis (27) retirés à l'étape 17.

DP-772 uniquement

19. Fixez la DP relay PWB (M). Fixez-la avec les deux vis M3 × 8 (N) fournies avec le DP-772.

20. Enficher le câble de la ligne des données du CIS (24) dans le connecteur (31) de la carte de circuit imprimé relais du DP (M).

DP-771 solamente

19. Fije el DP relay PWB (M). Fíjelo con la abrazadera (28) y los dos tornillos (27) que quitó en el paso 17.

DP-772 solamente

19. Fije el DP relay PWB (M). Fíjelo con los dos tornillos M3 × 8 (N) suministrados con DP-772.

20. Enchufe la línea de datos CIS (24) al conector (31) PWB del relé del DP (M).

---

nur DP-771

19. Befestigen Sie die DP Verbindungsplatine (M). Befestigen Sie die Klammer (28) und die beiden Schrauben (27), die in Schritt 17 entfernt wurden.

nur DP-772

19. Befestigen Sie die DP Verbindungsplatine (M). Befestigen Sie es mit den beiden M3 × 8 Schrauben (N), die sich im Lieferumfang des DP-772 befinden.

20. Die CIS-Datenleitung (24) an den Stecker(31) auf der DP-Relaisleiterplatte (M) anschließen.

Solo DP-771

19. Fissare la scheda DP Relay PWB (M). Fissarla con la staffa (28) e le due viti (27) rimosse al punto 17.

Solo DP-772

19. Fissare la scheda DP Relay PWB (M). Fissarla con le due viti M3 × 8 (N) fornite con l'alimentatore DP-772.

20. Inserire la linea dati CIS (24) nel connettore(31) sulla scheda a circuiti stampati di comunicazione DP (M).

仅限 DP-771

19. 固定 DP 中继板（M）。使用在步骤 17 中取下的金属板（28）和 2 颗螺丝（27）来固定。

仅限 DP-772

19. 固定 DP 中继板（M）。使用 DP-772 附带的 2 颗 M3X8(N) 螺丝来固定。

20. 将 CIS 数据线 (24) 连接到 DP 中继电路板 (M) 上的接插件 (31) 上。

DP-771 만

19. DP 중계 PWB (M) 를 고정합니다 . 단계 17 에서 분리한 브래킷 (28) 과 나사 (27) 2 개로 고정합니다 .

DP-772 만

19. DP 중계 PWB (M) 를 고정합니다 . DP-772 와 함께 공급된 나사 M3×8(N) 2 개를 사용하여 고정합니다 .

20. DP 중계기판 (M) 상의 커넥터 (31) 에 CIS 데이터 라인 (24) 을 연결합니다 .

DP-771 のみ

19. DP 中継基板 (M) を固定する。手順 17 で外した板金 (28) とビス (27)2 本で固定する。

DP-772 のみ

19. DP 中継基板 (M) を固定する。DP-772 に同梱のビス M3×8(N)2 本で固定する。

20. DP 中継基板 (M) 上のコネクター(31) に CIS データ線 (24) を接続する。

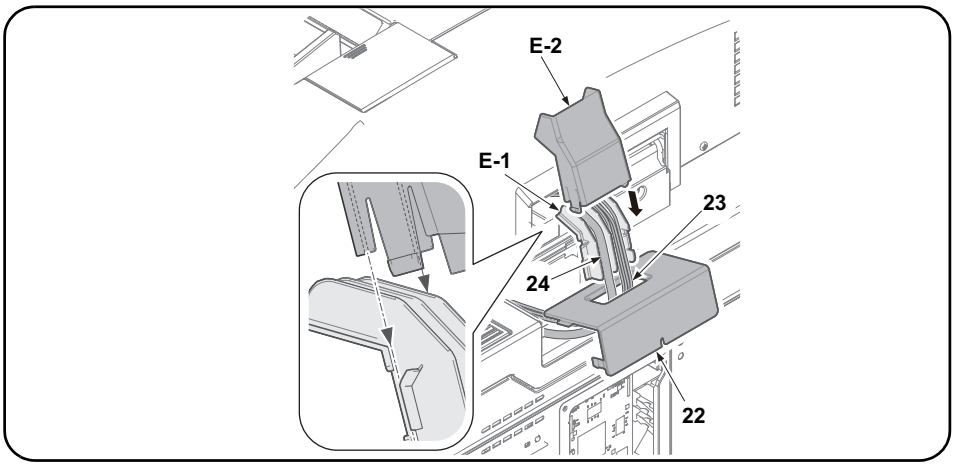

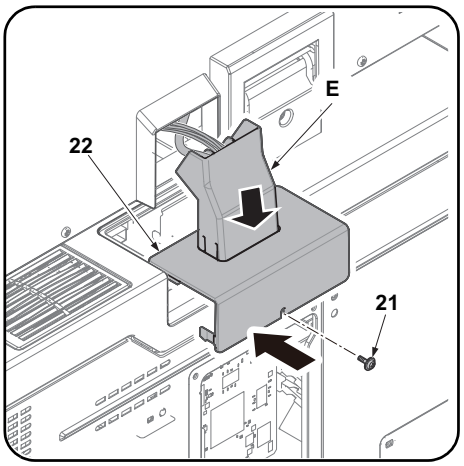

21. Pass the DP signal line cable (23) along the groove in the DP cable cover 1 (E-1).Pass the CIS data line cable (24) along the other groove.Install the DP cable cover 2 (E-2).

NOTICE
To avoid image problems that may be caused when the both of the DP signal line cable (23) and CIS data line cable (24) were passed through in a same groove, be sure to slip the individual line in a separate groove as shown in the figure.

22. Attach the DP cable cover (E) to the DP cable connection cover (22) and install the DP cable connection cover (22) using the screw (21) removed in step 14.

23. Install the DP relay PWB cover (20) usingthe four screws(19) removed in step 13.

---

21. Passez le câble de la ligne du signal DP (23) dans la rainure du couvercle 1 du câble DP (E-1).Passez le câble de ligne de données CIS (24) dans l'autre rainure.Installez le couvercle 2 du câble DP (E-2).
REMARQUE
Pour éviter les problèmes d'image pouvant être causés lorsque le câble de ligne de signal DP (23) et le câble de ligne de données CIS (24) ont été passé dans une même rainure, assurez-vous de glisser chaque ligne dans une rainure à part comme indiqué sur la figure.

22. Fixer le couvercle du câble du DP (E) sur le couvercle de la connexion du câble du DP (22) et installer le couvercle de la connexion du câble du DP (22) à l'aide de la vis (21) déposée à l'étape 14.

23. Installez le couvercle du circuit imprimé du relais du DP (20) à l'aide des quatre vis (19) retirées à l'étape 13.

---

21. Pase el cable de línea de señales del DP (23) a lo largo de la ranura de la cubierta de cables 1 del DP (E-1).Pase el cable de línea de datos de CIS (24) a lo largo de la otra ranura.Instale la cubierta de cables 2 del DP (E-2).
AVISO
Para evitar posibles problemas de imagen como consecuencia de pasar tanto el cable de línea de señales del DP (23) como el cable de línea de datos de CIS (24) a lo largo de la misma ranura, asegúrese de pasar cada una de las líneas por una ranura distinta como se muestra en la imagen.

22. Fije la cubierta del cable del DP (E) a la cubierta de conexión del cable del DP (22) e instale la cubierta de conexión del cable del DP (22) usando el tornillo (21) quitado en el paso 14.

23. Instale la cubierta de PWB del relé del DP (20) con los cuatro tornillos (19) que quitó en el paso 13.

---

21. Führen Sie die Signalleitung (23) des DP durch die Nut der Steckerabdeckung 1 (E-1) des DP. Verlegen Sie die Datenleitung der CIS (24) durch die andere Nut.Befestigen Sie die Steckerabdeckung 2 (E-2) des DP.
ANMERKUNG
Um Probleme mit der Bildqualität zu vermeiden, die entstehen können, wenn die Signalleitung (23) des DP und die Datenleitung der CIS (24) durch die gleiche Nut geführt werden, stellen Sie sicher, dass jede Leitung in einer getrennten Nut geführt wird, wie in dem Bild gezeigt.

22. Die DP-Kabelabdeckung (E) an der Abdeckung (22) des DP-Kabelanschlusses anbringen und die Abdeckung (22) des DP-Kabelanschlusses mittels der in Schritt 14 entfernten Schraube (21) befestigen.

23. Bringen Sie die Abdeckung (20) der DP-Verbindungsplatine wieder an. Benutzen Sie die Schraube (19) aus Schritt 13.

---

21. Far passare il cavo di linea del segnale DP (23) lungo la scanalatura sul coperchio del cavo DP 1 (E-1).Far passare il cavo di linea dei dati CIS (24) lungo l'altra scanalatura.Installare il coperchio del cavo DP 2 (E-2).
AVVISO
Per evitare i problemi di immagine che si verificano quando il cavo di linea del segnale DP (23) e il cavo di linea dei dati CIS (24) vengono fatti passare nella stessa scanalatura, ricordarsi di far passare questi due cavi in scanalature separate come indicato in figura.

22. .Fissare il coperchio del cavo DP (E) al coperchio di connessione del cavo DP (22), e quindi installare il coperchio di connessione del cavo DP (22) utilizzando la vite (21) rimossa nel passo 14.

23. IInstallare il coperchio della scheda a circuiti stampati di comunicazione DP (20) utilizzando le quattro viti (19) rimosse al punto 13.

---

21. 将 DP 信号线（23）穿过 DP 电缆盖板 1（E-1）的槽，再把 CIS 数据线（24）穿过别的槽。安装 DP 电缆盖板 2（E-2）。

注意
如将 DP 信号线（23）和 CIS 数据线（24）穿过同一个槽，可能会出现图像异常，因此必须如图所示分别穿过左右两侧的槽。

22. 将 DP 电缆盖板（E）安装到 DP 电缆连接盖板（22）上，使用步骤 14 中拆下的 1 颗螺丝（21）来安装 DP 电缆连接盖板（22）。

23. 使用在步骤 13 取下的 4 颗螺丝（19）来安装 DP 中继板的盖板（20）。

---

21. DP 케이블 커버 1(E-1) 의 홈을 따라 DP 시그널 라인 케이블 (23) 을 통과시킵니다 . 다른 홈을 따라 CIS 데이터 라인 케이블 (24) 을 통과시킵니다 .DP 케이블 커버 2(E-2) 를 설치합니다 .

주의
DP 시그널 라인 케이블 (23) 과 CIS 데이터 라인 케이블 (24) 을 같은 홈에 통과시키는 경우 화상 문제가 발생할 수 있으므로 그림과 같이 반드시 선을 따로 넣도록 하십시오 .

22. DP 케이블 커버 (E) 를 DP 케이블 연결 커버 (22) 에 부착하고 스텝 14 에서 제거한 나사 (21) 1 개로 DP 케이블 연결 커버 (22) 를 부착합니다 .

23. 13 단계에서 분리한 나사 (19) 4 개를 사용하여 DP 중계기판 커버 (20) 를 설치합니다 .

---

21. DP ケーブルカバー1(E-1) の溝に DP 信号線 (23) を通す。別の溝に CIS データ線(24)を通す。DP ケーブルカバー2(E-2) を取り付ける。
注意
DP 信号線(23)と CIS データ線(24)を同じ溝に通すと異常画像が発生する可能性があるため、図の様に左右の溝に別々に入れること。

22. DP ケーブルカバー(E) を DP ケーブル接続カバー(22) に取り付ける。手順 14 で外したビス (21)1 本で DP ケーブル接続カバー(22) を取り付ける。

23. 手順 13 で外したビス (19)4 本で、DP 中継基板カバー(20) を取り付ける。

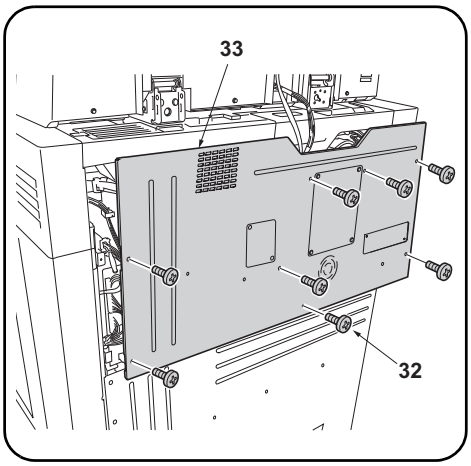

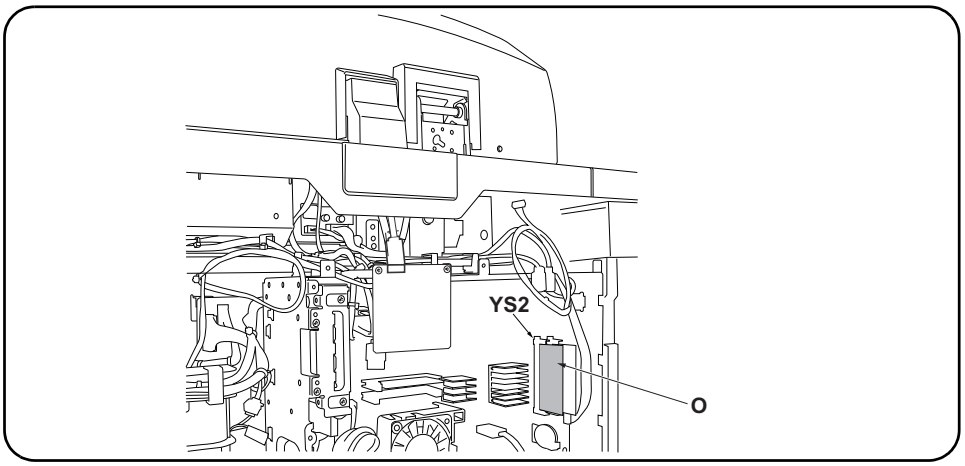

Steps for expanding the memory DIMM (1GB)(35, 45 and 55 ppm monochrome machines only) (DP-771 only)

24. Remove the 8 screws (32) and remove the upper rear cover (33) of the MFP.

25. Insert the memory DIMM (O) into the memory slot (YS2) of the main PWB. (Insert all the way until it clicks)

26. Replace the upper rear cover (33) of the MFP using the 8 screws (32).

Opérations pour l'expansion de la mémoire DIMM (1GB) (machines monochromes 35, 45 et 55 ppm uniquement)(DP-771 uniquement)

24. Déposer les 8 vis (32) et déposer le couvercle arrière supérieur (33) du MFP.

25. Insérer la mémoire DIMM (O) dans la fente mémoire (YS2) de la carte de CI principale. (Insérer à fond jusqu'au clic)

26. Reposer le couvercle arrière supérieur (33) sur le MFP à l'aide des 8 vis (32).

Pasos para ampliar la memoria DIMM (1GB) (máquinas monocromáticas de 35, 45 y 55 ppm solamente) (DP-771 solamente)

24. Quite los 8 tornillos (32) y quite la cubierta trasera superior (33) del MFP.

25. Inserte la memoria DIMM (O) en la ranura para memoria (YS2) en el PWB principal. (Insértela hasta escuchar un clic)

26. Vuelva a colocar la cubierta trasera superior (33) del MFP usando los 8 tornillos (32).

Schritte zur Aufrüstung der DIMM-Speichermodule (1GB) (nur 35, 45 und 55 ppm Monochrommaschinen) (nur DP-771)

24. Die 8 Schrauben (32) entfernen und die obere hintere Abdeckung (33) des MFP abnehmen.

25. Setzen Sie das DIMM-Speichermodul (O) in die Speicherbank (YS2) der Hauptleiterplatte ein. (Drücken Sie sie bis zum Einrasten ein.)

26. Die obere hintere Abdeckung (33) des MFP wieder mit den 8 Schrauben (32) anbringen.

Passi per l'espansione della memoria DIMM (1GB) (solo per le macchine monocromatiche 35, 45 e 55 ppm) (solo DP-771)

24. Rimuovere le 8 viti (32) e quindi rimuovere il coperchio superiore posteriore (33) dell'MFP.

25. Inserire la memoria DIMM (O) nello slot della memoria (YS2) sulla scheda principale PWB. (Inserire completamente finché non scatta in posizione con un clic)

26. Ricollocare il coperchio superiore posteriore (33) dell'MFP utilizzando le 8 viti (32).

内存卡（1GB）的增加步骤（仅对于 35 张、45 张和 55 张的黑白机）（仅限 DP-771）

24. 拆除 8 颗螺丝（32），拆下 MFP 的后上方盖板（33）。

25. 把内存卡（O）插入主板的内存插槽（YS2）。（插到底部，直到发出咔嗒声为止）

26. 使用 8 颗螺丝（32）按原样安装 MFP 的后上方盖板（33）。

메모리 DIMM (1GB) 의 증설순서 （흑백기 35 매 , 45 매 , 55 매만）（DP-771 만）

24. 나사 (32) 8 개를 제거하고 MFP 의 후면 상단커버 (33) 를 떼어 냅니다 .

25. 주 회로기판의 메모리 슬롯 (YS2) 에 메모리 DIMM(O) 을 삽입합니다 .（딸깍하고 소리가 날 때까지 삽입할 것 .）

26. 나사 (32) 8 개로 MFP 후면 상단 커버 (33) 를 원래대로 부착합니다 .

メモリーDIMM(1GB) の増設手順 （モノクロ機の 35 枚機、45 枚機、55 枚機のみ)(DP-771 のみ)

24. ビス (32)8 本を外し、MFP の後上カバー(33) を取り外す。

25. 主回路基板のメモリースロット (YS2) にメモリーDIMM(O) を挿入する。（カチッと音がするまで挿入すること）

26. ビス (32)8 本で、MFP の後上カバー(33) を元通り取り付ける。

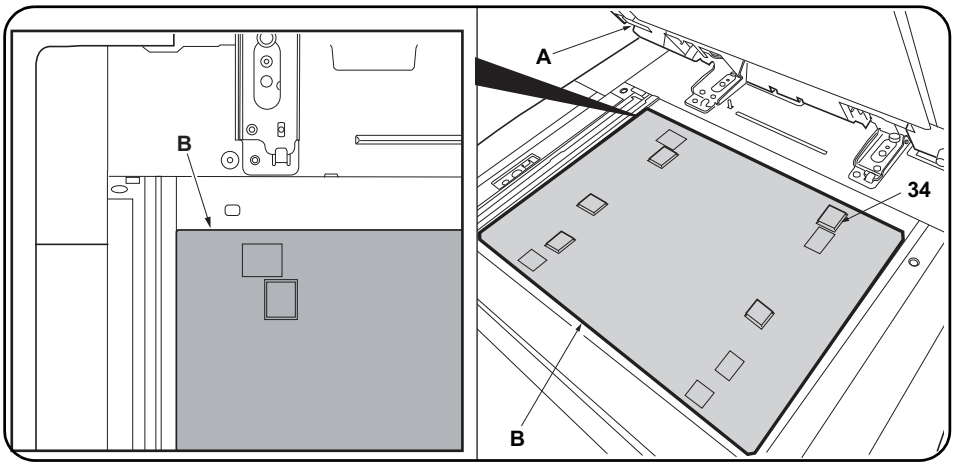

Fasten the original mat.

27. Place original mat (B) with its Velcro (34) upward over the contact glass.
Align original mat (B) corner that has 90 degrees of angle with the inner left corner of the original instruction panel.

28. Close DP (A) and attach original mat (B) onto it with Velcro.

Fixer la plaque d'original.

27. Placer la plaque d'original (B) sur la vitre d'exposition, en orientant les bandes Velcro (34) vers le haut.
Aligner le coin du plateau d'original (B) faisant un angle de 90 degrés avec le coin gauche interne du panneau d'instructions d'original.

28. Abaisser le DP (A) et y fixer la plaque d'original (B) à l'aide des bandes Velcro.

Fije la alfombrilla para originales.

27. Coloque la alfombrilla para originales (B) con el velcro (34) hacia arriba sobre el cristal de contacto.
Alinee la esquina que tiene un ángulo de 90 grados de la alfombrilla para originales (B) con la esquina interior izquierda del panel de instrucciones para el original.

28. Cierre el DP (A) y fije la alfombrilla para originales (B) con el velcro.

Befestigen der Originalmatte.

27. Die Originalmatte (B) mit dem Klettband (34) nach oben über das Kontaktglas legen.
Die Ecke der Originalmatte (B), die einen 90-Grad-Winkel aufweist, mit der linken, inneren Kante des Originalbedienfeldes ausrichten.

28. Den DP (A) schließen und die Originalmatte (B) mit dem Klettband auf ihm befestigen.

Fissaggio del tappetino originale.

27. Posizionare il tappetino originale (B) con il velcro (34) rivolto verso l'alto sul vetro di appoggio.
Allineare l'angolo di 90 gradi del coprioriginale (B) con l'angolo interno sinistro del pannello di controllo originale.

28. Chiudere il DP (A) e applicarvi il tappetino originale (B) con il velcro.

粘贴原稿垫。

27. 将原稿垫（B）放置在稿台玻璃上，并使魔术贴（34）向上。
将原稿垫（B）的 90 度角对准原稿指示板的内部左角。

28. 关闭 DP（A），使原稿垫（B）粘贴到 DP 上。

원고매트 부착

27. 벨크로 (34) 를 위로 향하게 하고 원고매트 (B) 를 원고대 유리판에 놓습니다 .
원고매트 (B) 는 90° 가 되어 있는 각을 원고 안내판의 좌측 안에 맞출 것 .

28. DP(A) 를 내리고 원고매트 (B) 를 DP(A) 에 부착합니다 .

原稿マットの貼り付け

27. マジックテープ (34) を上に向けて、原稿マット (B) をコンタクトガラス上に置く。
原稿マット (B) は 90° になっている角を原稿指示板の左奥に合わせること。

28. DP(A) を下ろし、原稿マット (B) を DP(A) に貼り付ける。

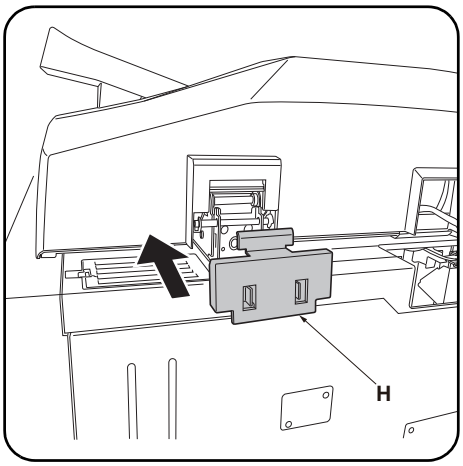

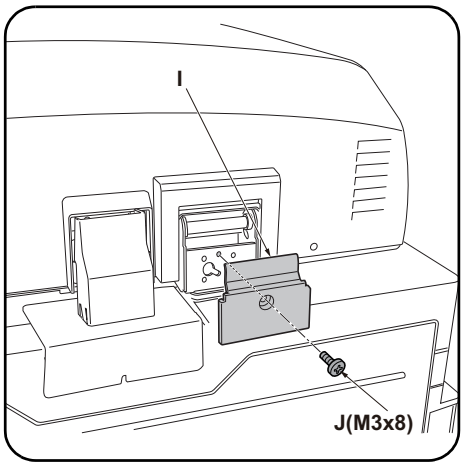

Installing the hinge cover (DP-771/772 only)
For the DP-770(B), proceed to step 31 on page 15.

29. Install the left hinge cover (H).

30. Install the right hinge cover (I) using the M3 × 8 screw BLACK (J).

Installation des couvercles de charnière (DP-771/772 uniquement)
Pour le DP-770(B), passer à l'étape 31 de la page 15.

29. Installer le couvercle de la charnière gauche (H).

30. Installer le couvercle de la charnière droite (I) à l'aide de la vis M3 × 8 NOIRE (J).

Instalación de la cubierta de las bisagras (DP-771/772 solamente)
Para el DP-770(B), vaya al paso 31 de la página 15.

29. Instale la cubierta de la bisagra izquierda (H).

30. Instale la cubierta de la bisagra derecha (I) usando el tornillo M3 × 8 NEGRO (J).

Installieren der Scharnierabdeckung (nur DP-771/772)
Beim DP-770(B) gehen Sie zum Schritt 31 auf Seite 15 weiter.

29. Die linke Scharnierabdeckung (H) anbringen.

30. Die rechte Scharnierabdeckung (I) mit der M3 × 8 Schraube SCHWARZ (J) anbringen.

Installazione del coperchio cerniera (solo DP-771/772)
Per DP-770(B), procedere con il punto 31 a pagina 15.

29. Installare il coperchio cerniera sinistra (H).

30. Installare il coperchio cerniera destra (I) utilizzando la vite M3 × 8 NERA (J).

安装铰链盖板（仅限 DP-771/772）
DP-770(B) 跳至 P15 的步骤 31。

29. 安装左部铰链盖板 (H)。

30. 使用 1 颗 M3×8 螺丝 BLACK(J) 来安装右部铰链盖板 (I)。

힌지커버 부착 (DP-771/772 만)
DP-770(B) 은 P15 의 순서 31 으로 진행 .

29. 좌측 힌지커버 (H) 를 부착합니다 .

30. 나사 M3×8BLACK(J) 1 개로 우측 힌지커버 (I) 를 부착합니다 .

ヒンジカバーの取り付け(DP-771/772 のみ)
DP-770(B) は、P15 の手順 31 に進む。

29. 左ヒンジカバー(H) を取り付ける。

30. ビス M3×8BLACK(J)1 本で右ヒンジカバー (I) を取り付ける。

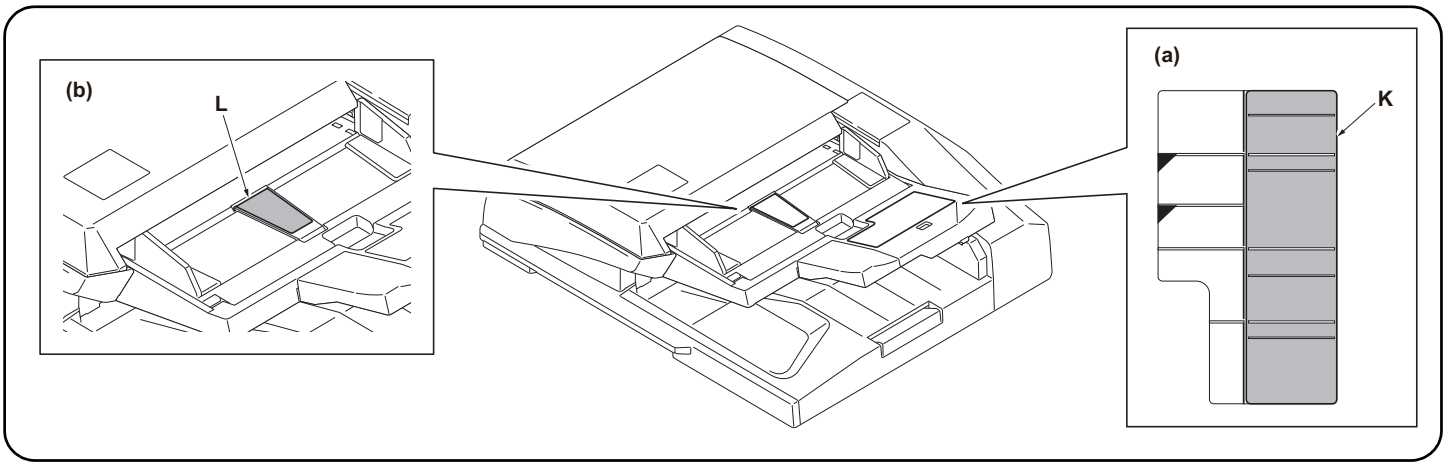

Adhere the label

31. Clean the label on the original table with alcohol.

32. Adhere Label “Operation procedure” (K) of which the language corresponding to the destination of the MFP onto the existing label on the original table. Figure (a)

33. Adhere Caution label “Original face up!” (L) of which the language corresponding to the destination of the MFP onto the label on the original table. Figure (b)

Coller l’étiquette relative

31. Avec de l'alcool, nettoyer létiquette se trouvant sur le plateau d'original.

32. Coller l'étiquette “Processus opératoire” (K) dans la langue correspondant au destinataire du MFP sur l'étiquette existante sur le plateau d'original du DP. Figure (a)

33. Coller l'étiquette de mise en garde “Original en haut!” (L) dans la langue correspondant au destinataire du MFP sur l'étiquette du plateau d'original. Figure (b)

Pegue la etiqueta

31. Limpie con alcohol la etiqueta de la cubierta de originales.

32. Adhiera la etiqueta “Procedimiento operativo” (K) del idioma correspondiente al destino del MFP sobre la etiqueta que se encuentra sobre la cubierta de originales. Figura (a)

33. Pegue la etiqueta de precaución “¡La cara del original hacia arriba!” (L), del idioma que corresponde al destino del MFP, sobre la etiqueta en la cubierta de originales. Figura (b)

Anbringen des Schildes

31. Das Schild auf dem Originalbedienfeld mit Alkohol reinigen.

32. Das Schild „Funktionsanweisung“ (K) in der Sprache des jeweiligen Einsatzlandes des MFP auf das vorhandene Schild auf dem Originalbedienfeld aufkleben. Abbildung (a)

33. Das Warnschild „Originalschriftseite nach oben!“ (L) in der Sprache des jeweiligen Einsatzlandes des MFP auf das vorhandene Schild auf dem Originalbedienfeld aufkleben. Abbildung (b)

Applicazione dell’etichetta

31. Pulire con alcool l’etichetta sul piano originale.

32. Far aderire l’etichetta “Procedure di funzionamento” (K) corrispondente alla lingua di destinazione dell’MFP, sull’etichetta esistente sul piano originale. Figura (a)

33. Far aderire l’etichetta di avvertenza “Originale rivolto verso l’alto!” (L) corrispondente alla lingua di destinazione dell’MFP, sull’etichetta del piano originale. Figura (b)

粘贴标签

31. 不需要本步骤。

32. 不需要本步骤。

33. 不需要本步骤。

라벨 부착

31. 이 단계가 필요하지 않습니다 .

32. 이 단계가 필요하지 않습니다 .

33. 이 단계가 필요하지 않습니다 .

ラベルの貼り付け

31. この作業は不要。

32. この作業は不要。

33. この作業は不要。

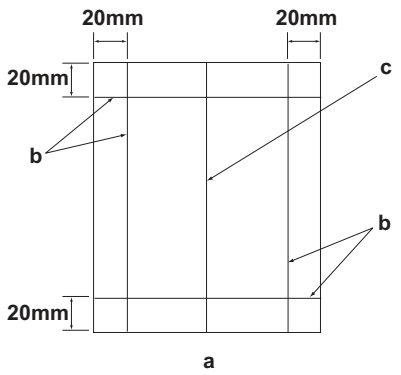

[Operation check]

1. To check the machine operation, prepare original (a) where 4 lines (b) are drawn 20 mm from the edges of the A3 sheet and 1 line (c) is drawn at its center.
2. Connect the power plug of the MFP into the wall outlet and turn the main power switch on.
3. Set the original (a) on the DP and perform a test copy to check the operation and the copy example.

[Vérification du fonctionnement]

1. Pour vérifier le bon fonctionnement de l'appareil, préparer un original (a) sur lequel sont tracées 4 lignes (b) à 20 mm des bords de la feuille A3 et 1 ligne (c) en son axe.
2. Brancher la fiche d'alimentation du MFP sur la prise murale et mettre l'appareil sous tension.
3. Placer l'original (a) sur le DP et effectuer une copie de test pour vérifier le fonctionnement et l'exemple de copie.

[Verifique el funcionamiento]

1. Para comprobar el funcionamiento del aparato, prepare un original (a) que contenga 4 líneas (b) dibujadas a 20 mm de los bordes de la hoja A3 y 1 línea (c) dibujada en el centro.
2. Conecte el enchufe eléctrico del MFP en el tomacorriente de la pared y encienda el interruptor principal.
3. Coloque el original (a) en el DP y haga una copia de prueba para verificar el funcionamiento y el ejemplo de copia.

[Funktionsprüfung]

1. Zum Prüfen der Gerätefunktion das Original (a) vorbereiten, auf das 4 Linien (b) 20 mm von den Kanten des A3-Blattes und 1 Linie (c) in der Mitte gezeichnet sind.
2. Den Netzstecker am MFP in die Steckdose stecken und den Strom einschalten.
3. Das Original (a) auf den DP legen und eine Testkopie erstellen, um die Funktion und das Kopierbeispiel zu prüfen.

[Verifica del funzionamento]

1. Per verificare il funzionamento della macchina, preparare l'originale (a) tirando 4 linee (b) a 20 mm dai bordi del foglio A3 e una linea (c) al centro.
2. Inserire la spina dell'alimentazione dell'MFP nella presa a muro, quindi posizionare l'interruttore principale su On.
3. Posizionare l'originale(a) sul DP ed eseguire una copia di prova per verificare il funzionamento e l'esempio di copia.

[动作确认]

1. 若要检查机器动作，准备一张 A3 原稿（a），距纸张边缘 20mm 画出 4 条线（b）并且在原稿中心画出 1 条线（c）。
2. 将 MFP 的电源插头插入墙壁插座并打开主电源。
3. 在 DP 上设定原稿（a）并进行测试复印，确认机器动作和复印样本。

[동작확인]

1. 기계 작동 확인을 위해서 , A3 용지 선단에서 20mm 떨어진 곳에 4 개의 선 (b) 과 센터에 1 개의 선 (c) 이 그려진 원고 (a) 를 준비 .
2. 콘센트에 MFP 전원플러그를 꽂고 메인 전원 스위치를 ON 으로 합니다 .
3. DP 상에 원고 (a) 를 준비하고 테스트 카피를 확인하여 작동 상태와 카피 샘플를 확인합니다 .

[動作確認]

1. A3 サイズ用紙の端から 20mm の位置に線 (b)4 本と、用紙の中心に線 (c)1 本を引いた、動作確認用の原稿 (a) を用意する。
2. MFP の電源プラグをコンセントに差し込み、主電源スイッチを ON にする。
3. 原稿 (a) を DP にセットし、テストコピーを行い、動作およびコピーサンプルを確認する。

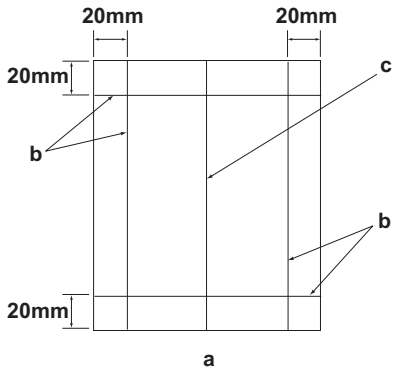

4. Compare original (a) with the copy example. If the gap exceeds the reference value, perform the following adjustments according to the type of the gap.
Check images of the DP after checking and adjusting images of the MFP. For details, see the service manual.
NOTICE: If there is any image fogging, adjust the U068 DP scanning position. If you change the scanning position with U068, adjust the U071 DP leading edge timing.

---

4. Comparer l'original (a) avec l'exemple de copie. Si l'écart excède la valeur de référence, effectuer les réglages suivants en fonction du type d'écart.
Vérifier les images du DP après avoir contrôlé et réglé les images du MFP. Pour plus de détails, se reporter au manuel d'entretien.
REMARQUE: Si l'image est floue, régler la position de balayage de U068 du DP. Si la position de balayage de U068 est modifiée, régler la synchronisation du bord d'attaque de U071.

---

4. Compare el original (a) con el ejemplo de copia. Si la separación supera el valor de referencia, realice los siguientes ajustes según el tipo de separación.
Compruebe las imágenes del DP después de comprobar y ajustar las imágenes del MFP. Para más detalles, lea el manual de servicio.
AVISO: Si la imagen estuviera borrosa, ajuste la posición de escaneo U068 del DP. Si cambia la posición de escaneo con U068, ajuste la sincronización de borde superior U071 del DP

---

4. Das Original (a) mit dem Kopierbeispiel vergleichen. Wenn der Abstand größer als der Bezugswert ist, die folgenden Einstellungen gemäß dem Abstandstyp durchführen.
Die Bilder des DP nach dem Prüfen und Einstellen der Bilder des MFP prüfen. Weitere Einzelheiten siehe Wartungsanleitung.
ANMERKUNG: Falls das Bild verschwommen wirkt, ist die U068 DP Scan-Position zu verstellen. Wenn Sie die Scan-Position mit U068 verstellen, müssen Sie das U071 DP-Vorderkanten-Timing entsprechend verstellen.

---

4. Confrontare l'originale (a) con l'esempio di copia. Se lo scostamento supera il valore di riferimento, eseguire le seguenti regolazioni in funzione del tipo di scostamento.
Controllare le immagini del DP dopo avere effettuato i controlli e le regolazioni delle immagini sull'MFP. Per ulteriori dettagli leggere il manuale d'istruzioni.
AVVISO: Se è presente una qualsiasi sfocatura dell'immagine, regolare la posizione di scansione DP U068. Se si cambia la posizione di scansione con U068, regolare la sincronizzazione del bordo principale DP U071.

---

4. 对比复印样本和原稿（a），如果偏移值在标准值以上时，对偏移原稿进行调整。
对 MFP 的图像确认和调整后再对 DP 的图像进行确认。详细内容请参见维修手册。
（注意）如果图像出现底灰，用 U068 来调整 DP 的扫描位置。如果用 U068 更改了扫描位置，则再用 U071 对 DP 的前端定时进行调整

---

4. 원고 (a) 와 카피 샘플을 비교하여 차이가 기준치를 벗어나는 경우 , 차이 (틈) 의 형태에 따라 다음을 조정합니다 .
MFP 의 화상확인 및 조정을 하고나서 DP 의 화상확인을 할 것 . 상세는 서비스 매뉴얼을 참조할 것 .
(주의) 화상 카브리가 발생하는 경우 , U068DP 스캔위치 조정을 합니다 . U068 에서 스캔위치를 변경한 경우 U071DP 선단 타이밍 조정을 합니다 .

---

4. 原稿（a）とコピーサンプルを比較し、基準値以上のずれがある場合、ずれ方に応じて調整を行う。
MFP の画像確認及び調整を行ってから DP の画像確認を行うこと。詳細はサービスマニュアルを参照のこと。
（注意）画像カブリが発生する場合、U068 DP 読み取り位置の調整を行う。U068 で読み取り位置を変更した場合、U071 DP 先端タイミング調整を行う。

Be sure to adjust in the following order. If not, the adjustment cannot be performed correctly.
For checking the angle of leading edge, see page 20. <Reference value> Simplex copying: within ±3.0 mm; Duplex copying: within ±4.0 mm
For checking the angle of trailing edge, see page 23. <Reference value> Simplex copying: within ±3.0 mm; Duplex copying: within ±4.0 mm
When using the original for adjustment, automatic adjustment of magnification, leading edge timing and center line can be performed at a time.
For the automatic adjustment using the original for adjustment, see page 26.

Veillez à effectuer le réglage en procédant dans l'ordre suivant. Sinon, il sera impossible d'obtenir un réglage correct.
Pour vérifier l'angle du bord avant, reportez-vous à la page 20. <Valeur de référence>Copie recto seul: ±3,0 mm max.; copie recto verso: ±4,0 mm max.
Pour vérifier l'angle du bord arrière, reportez-vous à la page 23. <Valeur de référence>Copie recto seul: ±3,0 mm max.; copie recto verso: ±4,0 mm max.
Lorsque vous utilisez l'original pour effectuer le réglage, vous pouvez effectuer automatiquement le réglage de l'agrandissement, de la synchronisation du bord avant et de la ligne médiane en une seule fois.
Pour le réglage automatique en utilisant l'original pour effectuer le réglage, reportez-vous à la page 26.

Asegúrese de ajustar en el siguiente orden. De lo contrario, el ajuste no puede hacerse correctamente.
Para verificar el ángulo del borde superior, vea la página 20. <Valor de referencia>Copia simple: dentro de ±3,0 mm; Copia duplex: dentro de ±4,0 mm
Para verificar el ángulo del borde inferior, vea la página 23. <Valor de referencia>Copia simple: dentro de ±3,0 mm; Copia duplex: dentro de ±4,0 mm
Cuando utilice el original para el ajuste, puede hacerse un ajuste automático del cambio de tamaño, sincronización del borde superior y línea central al mismo tiempo.
Para el ajuste automático utilizando el original para el ajuste, vea la página 26.

Die Einstellung in der folgenden Reihenfolge durchführen. Anderenfalls kann die Einstellung nicht korrekt durchgeführt werden.
Angaben zur Prüfung des Winkels der Vorderkante auf Seite 20. <Bezugswert>Simplexkopie: innerhalb ±3,0 mm; Duplexkopie: innerhalb ±4,0 mm
Angaben zur Prüfung des Winkels der Hinterkante auf Seite 23. <Bezugswert>Simplexkopie: innerhalb ±3,0 mm; Duplexkopie: innerhalb ±4,0 mm
Bei Verwendung des Originals für die Einstellung können die automatischen Einstellungen für Vergrößerung, Vorderkanten-Timing und Mittellinie gleichzeitig durchgeführt werden.
Angaben zur automatischen Einstellung mithilfe des Originals auf Seite 26.

Accertarsi di eseguire le regolazioni in questa sequenza: in caso contrario, la regolazione non può essere effettuata correttamente.
Per controllare l'angolo del bordo principale, vedere pagina 20. <Valore di riferimento>Copia simplex: entro ±3,0 mm; Copia duplex: entro ±4,0 mm
Per controllare l'angolo del bordo di uscita, vedere pagina 23. <Valore di riferimento>Copia simplex: entro ±3,0 mm; Copia duplex: entro ±4,0 mm
Quando si utilizza l'originale per la regolazione, la regolazione automatica dell'ingrandimento, della sincronizzazione del bordo principale e della linea centrale possono essere eseguiti contemporaneamente.
Per la regolazione automatica eseguita con l'originale, vedere pagina 26.

必须按照以下步骤进行调整，否则不能达到准确调整的要求。
・确认前端倾斜度　第 20 页　〈标准值〉　单面：±3.0㎜ 以内，双面：±4.0㎜ 以内
・确认后端倾斜度　第 23 页　〈标准值〉　单面：±3.0㎜ 以内，双面：±4.0㎜ 以内
使用调整用的原稿时，可以同时自动进行等倍值，前端定时以及中心线的调整。
・通过调整用原稿进行自动调整　第 26 页

반드시 하기의 순서로 조정을 할 것 . 순서대로 조정을 하지 않는 경우 바른 조정을 할 수 없습니다 .
・선단경사확인　20 페이지 ＜기준치＞단면:±3.0mm 이내 , 양면:±4.0mm 이내
・후단경사확인　23 페이지 ＜기준치＞단면:±3.0mm 이내 , 양면:±4.0mm 이내
조정용 원고를 사용하는 경우 , 등배도 , 선단타이밍 , 센터 라인의 자동조정이 한번에 수행됩니다 .
・조정용원고를 사용한 자동조정은 26 페이지 참조

必ず下記の順序で調整を行うこと。順序通りに調整を行わない場合、正しい調整ができない。
・先端斜め確認　20 ページ　＜基準値＞片面:±3.0㎜ 以内、両面:±4.0㎜ 以内
・後端斜め確認　23 ページ　＜基準値＞片面:±3.0㎜ 以内、両面:±4.0㎜ 以内
調整用原稿を使用すると、等倍度調整、先端タイミング調整、センターライン調整の自動調整が一度におこなえる。
・調整用原稿による自動調整 26 ページ

For checking the magnification, see page29.	<Reference value> Within ±1.5%
For checking the leading edge timing, see page 31.	<Reference value> Within ±2.5 mm
For checking the center line, see page 33.	<Reference value> Simplex copying: within ±2.0 mm; Duplex copying: within ±3.0 mm

Pour vérifier l'agrandissement, reportez-vous à la page 29.	<Valeur de référence> ±1,5% max.
Pour vérifier la synchronisation du bord avant, reportez-vous à la page 31.	<Valeur de référence> ±2,5 mm max.
Pour vérifier la ligne médiane, reportez-vous à la page 33.	<Valeur de référence> Copie recto seul: ±2,0 mm max.; Copie recto verso: ±3,0 mm max.

Para verificar el cambio de tamaño, vea la página 29.	<Valor de referencia> Dentro de ±1,5 %
Para verificar la sincronización del borde inferior, vea la página 31.	<Valor de referencia> Dentro de ±2,5 mm
Para verificar la línea central, vea la página 33.	<Valor de referencia> Copia simple: dentro de ±2,0 mm; Copia duplex: dentro de ±3,0 mm

Angaben zur Prüfung der Vergrößerung auf Seite 29.	<Bezugswert> Innerhalb ±1,5 %
Angaben zur Prüfung des Vorderkanten-Timings auf Seite 31.	<Bezugswert> Innerhalb ±2,5 mm
Angaben zur Prüfung der Mittellinie auf Seite 33.	<Bezugswert> Simplexkopie: innerhalb ±2,0 mm; Duplexkopie: innerhalb ±3,0 mm

Per controllare l'ingrandimento, vedere pagina 29.	<Valore di riferimento> Entro ±1,5%
Per controllare la sincronizzazione del bordo principale, vedere pagina 31.	<Valore di riferimento> Entro ±2,5 mm
Per controllare la linea centrale, vedere pagina 33.	<Valore di riferimento> Copia simplex: entro ±2,0 mm; Copia duplex: entro ±3,0 mm

・确认等倍值	第 29 页	〈 标准值 〉	±1.5% 以内
・确认前端定时调整	第 31 页	〈 标准值 〉	±2.5㎜ 以内
・确认中心线	第 33 页	〈 标准值 〉	单面 ：±2.0㎜ 以内， 双面 ：±3.0㎜ 以内

・등배도 확인	29 페이지	<기준치>	±1.5% 이내
・선단 타이밍 확인	31 페이지	<기준치>	±2.5mm 이내
・센터 라인확인	33 페이지	<기준치>	단면:±2.0mm 이내 , 양면:±3.0mm 이내

・等倍度確認	29 ページ	＜基準値＞	±1.5% 以内
・先端タイミング確認	31 ページ	＜基準値＞	±2.5㎜ 以内
・センターライン確認	33 ページ	＜基準値＞	片面:±2.0㎜ 以内、 両面:±3.0㎜ 以内

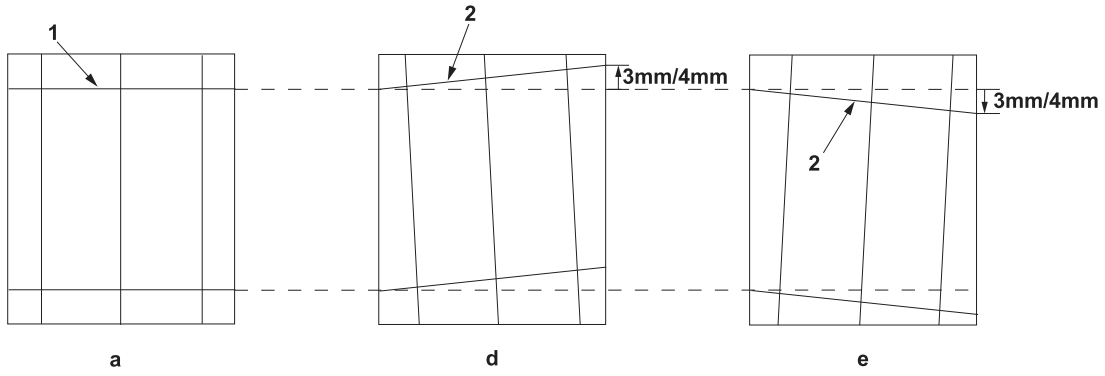

[Checking the angle of leading edge]

1. Check the horizontal gap between line (1) of original (a) and line (2) of copy example positions. If the gap exceeds the reference value, adjust the gap according to the following procedure.
<Reference value> For single copying: The horizontal gap of line (2) should be within ±3.0 mm.
For duplex copying: The horizontal gap of line (2) should be within ±4.0 mm.

[Vérification de l'angle du bord avant]

1. Vérifier l'écart horizontal entre la position de la ligne (1) de l'original (a) et celle de la ligne (2) de l'exemple de copie. Si l'écart excède la valeur de référence, le régler selon la procédure suivante.
<Valeur de référence> Pour la copie recto : l'écart horizontal de la ligne (2) doit être de ±3,0 mm.
Pour la copie recto-verso : l'écart horizontal de la ligne (2) doit être de ±4,0 mm.

[Verificación del ángulo del borde superior]

1. Compruebe la separación horizontal entre la línea (1) del original (a) y la línea (2) de las posiciones del ejemplo de copia. Si la separación supera el valor de referencia, ajústela siguiendo este procedimiento.
<Valor de referencia> Para el copiado por una cara: la separación horizontal de la línea (2) debe estar dentro de ±3,0 mm.
Para el copiado dúplex: la separación horizontal de la línea (2) debe estar dentro de ±4,0 mm.

[Überprüfen des Winkels der Vorderkante]

1. Den horizontalen Abstand zwischen der Linie (1) des Originals (a) und der Linie (2) der Kopierbeispielspositionen prüfen. Wenn der Abstand größer als der Bezugswert ist, den Abstand mit dem folgenden Verfahren einstellen.
<Bezugswert> Einzelkopie: Der horizontale Abstand der Linie (2) sollte innerhalb von ±3,0 mm liegen.
Duplexkopie: Der horizontale Abstand der Linie (2) sollte innerhalb von ±4,0 mm liegen.

[Controllo dell'angolo del bordo principale]

1. Verificare lo scostamento orizzontale fra la linea (1) dell'originale (a) e la linea (2) delle posizioni dell'esempio di copia. Se lo scostamento supera il valore di riferimento, regolare lo scostamento stesso seguendo questa procedura.
<Valore di riferimento> Per la copia singola: lo scostamento orizzontale della linea (2) deve limitarsi a ± 3,0 mm.
Per la copia duplex: lo scostamento orizzontale della linea (2) deve limitarsi a ±4,0 mm.

[确认前端倾斜度]

1. 确认原稿（a）上的线（1）和复印样本上的线（2）的左右偏移值。如果偏移值超过标准值，则按照下列步骤进行调整
< 标准值 > 单面复印时，线（2）的左右偏移值：±3.0㎜ 以内。
双面复印时，线（2）的左右偏移值：±4.0㎜ 以内。

[선단 경사확인]

1. 원고 (a) 의 선 (1) 과 샘플 카피의 선 (2) 의 좌우 차이를 확인합니다 . 차이가 기준치 외의 경우 다음의 순서대로 조정을 합니다 .
< 기준치 > 단면의 경우 선 (2) 의 좌우차이 : ±3.0mm 이내
양면의 경우 선 (2) 의 좌우차이 : ±4.0mm 이내

[先端斜め確認]

1. 原稿 (a) の線 (1) とコピーサンプルの線 (2) の左右のずれを確認する。ずれが基準値外の場合、次の手順で調整を行う。
＜基準値＞片面の場合、線 (2) の左右ずれ : ±3.0㎜ 以内
両面の場合、線 (2) の左右ずれ : ±4.0㎜ 以内

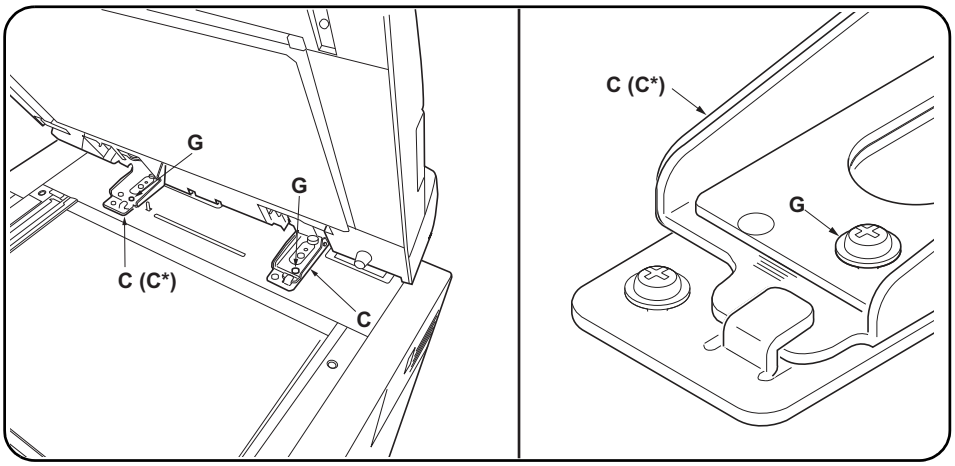

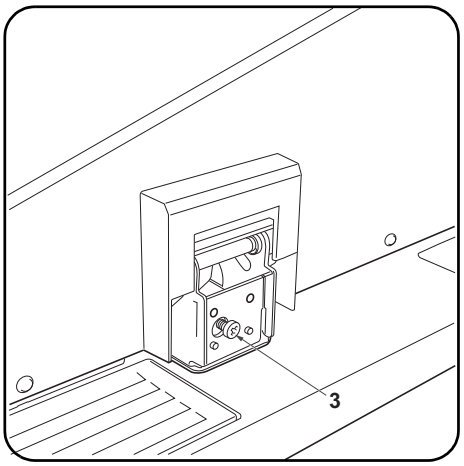

2. DP-770(B): Remove the angle control fitting (D). Loosen the 2 M4 × 14TP screws (G) on the left and right fixing fittings (C).
DP-771/772: Remove the left hinge cover (H) and the angle control fitting (D). Loosen the 2 M4 × 14TP screws (G) on the left and right fixing fittings (C)(C*)
3. Turn adjusting screw (3) at the rear side of the right hinge to adjust the DP position.
For copy example (d): Turn the adjusting screw counterclockwise and move the DP to the inner side.
For copy example (e): Turn the adjusting screw clockwise and move the DP to the front side.
Amount of change per scale: Approx. 1.0 mm
4. Perform a test copy.

---

2. DP-770(B): Déposer la fixation d'angle (assurant le contrôle de l'ouverture) (D). Desserrer les 2 vis TP M4 × 14 (G) sur les fixations gauche et droite (C).
DP-771/772: Déposer le couvercle de la charnière gauche (H) et la fixation d'angle (assurant le contrôle de l'ouverture) (D). Desserrer les 2 vis TP M4 × 14 (G) sur les fixations gauche et droite (C)(C*).
3. Tourner la vis de réglage (3) à l'arrière de la charnière droite pour régler la position du DP.
Pour l'exemple de copie (d) : tourner la vis de réglage dans le sens inverse des aiguilles d'une montre et déplacer le DP vers l'intérieur.
Pour l'exemple de copie (e) : tourner la vis de réglage dans le sens des aiguilles d'une montre et déplacer le DP vers l'avant.
Changement par graduation d'échelle : environ 1,0 mm
4. Effectuer une copie de test.

---

2. DP-770(B): quite el herraje de control de ángulo (D). Afloje los 2 tornillos TP M4 × 14 (G) de los herrajes de fijación izquierdo y derecho (C).
DP-771/772: quite la cubierta de la bisagra izquierda (H) y el herraje de control de ángulo (D). Afloje los 2 tornillos TP M4 × 14 (G) de los herrajes de fijación izquierdo y derecho (C)(C*).
3. Gire el tornillo de ajuste (3) en el lado trasero de la bisagra derecha para ajustar la posición del DP.
Para el ejemplo de copia (d): gire el tornillo de ajuste en sentido antihorario y mueva el DP al lado interno.
Para el ejemplo de copia (e): gire el tornillo de ajuste en sentido horario y mueva el DP al lado frontal.
Magnitud del cambio por escala: aprox. 1,0 mm
4. Haga una copia de prueba.

---

2. DP-770(B): Die Winkeleinstellbefestigung (D) entfernen. Die 2 M4 × 14TP Schrauben (G) an den linken und rechten Befestigungshalterung (C) lösen.
DP-771/772: Die linke Scharnierabdeckung (H) und die Winkeleinstellbefestigung (D) entfernen. Die 2 M4 × 14TP Schrauben (G) an den linken und rechten Befestigungshalterungen (C)(C*) lösen.
3. Die Einstellschraube (3) an der Rückseite des rechten Scharniers einstellen, um die DP-Position einzustellen.
Kopierbeispiel (d): Die Einstellschraube nach links drehen und den DP nach innen schieben.
Kopierbeispiel (e): Die Einstellschraube nach rechts drehen und den DP nach vorne schieben.
Änderung pro Maßstab: Ungefähr 1,0 mm
4. Eine Testkopie erstellen.

---

2. DP-770(B): Rimuovere l'accessorio di regolazione angolare (D). Allentare le 2 viti M4 × 14TP (G) sugli accessori di fissaggio (C) destro e sinistro.
DP-771/772: Rimuovere il coperchio cerniera sinistra (H) e l'accessorio di regolazione angolare (D). Allentare le 2 viti M4 × 14TP (G) sui lati destro e sinistro degli accessori di fissaggio (C)(C*) destro e sinistro.
3. Ruotare la vite di regolazione (3) sul lato posteriore della cerniera destra per regolare la posizione del DP.
Per l'esempio di copia (d): ruotare la vite di regolazione in senso antiorario e spostare il DP verso l'interno.
Per l'esempio di copia (e): ruotare la vite di regolazione in senso orario e spostare il DP in avanti.
Entità modifica per scala: circa 1,0 mm
4. Eseguire una copia di prova.

---

2. DP-770(B) 时：拆下角度限制工具 (D)。拧松左右固定工具 (C) 的 2 颗 M4x14TP(G) 螺丝。
DP-771/772 时：拆下左部铰链盖板 (H) 以及角度限制工具 (D)。拧松左右固定工具 (C)(C*) 的 2 颗 M4x14TP(G) 螺丝。
3. 旋转右部铰链的后部的调整螺钉（3）以调整 DP 位置。
对于复印样本 (d)：逆时针旋转调整螺钉并将 DP 移动到内侧。
对于复印样本 (e)：顺时针旋转调整螺钉并将 DP 移动到正面。
按比例尺的更改量：约 1.0mm
4. 进行测试复印。

---

2. DP-770(B) 의 경우:각도 고정쇠 (D) 를 제거합니다 . 좌우의 고정쇠 (C) 나사 M4x14TP(G) 2 개를 느슨하게 합니다 .
DP-771/772 의 경우:좌 힌지커버 (H) 및 각도 고정쇠 (D) 를 제거합니다 . 좌우의 고정쇠 (C)(C*) 의 나사 M4x14TP(G) 2 개를 느슨하게 합니다 .
3. 우 힌지 뒷측 조정나사 (3) 를 돌려 DP 의 위치를 조정합니다 .
샘플 카피 (d) 의 경우:조정나사를 좌로 돌려 DP 를 안으로 넣습니다 .
샘플 카피 (e) 의 경우 : 조정나사를 오른쪽으로 돌려 DP 를 앞으로 뺍니다 .
1 개 변화량:약 1.0mm
4. 테스트 카피를 합니다 .

---

2. DP-770(B) の場合:角度規制金具 (D) を取り外す。左右の固定金具 (C) のビス M4x14TP(G)2 本を緩める
DP-771/772 の場合:左ヒンジカバー(H) および角度規制金具 (D) を取り外す。左右の固定金具 (C)(C*) のビス M4x14TP(G)2 本を緩める。
3. 右ヒンジ後側の調整ビス (3) を回し、DP の位置を調整する。
コピーサンプル (d) の場合:調整ビスを左に回し、DP を奥へ動かす。
コピーサンプル (e) の場合:調整ビスを右に回し、DP を手前へ動かす。
1 目盛り当たりの変化量:約 1.0mm
4. テストコピーを行う。

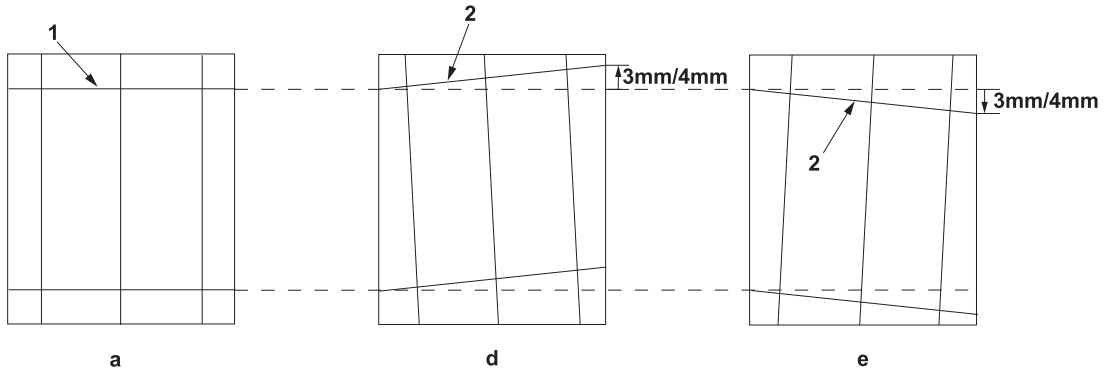

5. Repeat the steps above until the gap of line (2) of copy example shows the following reference values.
<Reference value> For single copying: The horizontal gap of line (2) should be within ±3.0 mm.
For duplex copying: The horizontal gap of line (2) should be within ±4.0 mm.
6. After adjustment is completed, retighten two M4 × 14TP screws (G) that have been loosened in step 2.
7. Remove the original mat (B) and refit it (see steps 27 and 28 on page 13).

---

5. Répéter les étapes ci-dessus jusqu'à ce que l'écart de la ligne (2) de l'exemple de copie indique les valeurs de référence suivantes.
<Valeur de référence> Pour la copie recto : l'écart horizontal de la ligne (2) doit être de ±3,0 mm.
Pour la copie recto-verso : l'écart horizontal de la ligne (2) doit être de ±4,0 mm.
6. Une fois le réglage effectué, resserrer les deux vis TP M4 × 14 (G) desserrées à l'étape 2.
7. Retirez le tapis d'original (B) et remettez-le en place. (Reportez-vous aux étapes 27 et 28 à la page 13.)

---

5. Repita los pasos anteriores hasta que la separación de la línea (2) del ejemplo de copia presente los siguientes valores de referencia.
<Valor de referencia> Para el copiado por una cara: la separación horizontal de la línea (2) debe estar dentro de ±3,0 mm.
Para el copiado dúplex: la separación horizontal de la línea (2) debe estar dentro de ±4,0 mm.
6. Una vez hecho el ajuste, vuelva a apretar los dos tornillos TP M4 × 14 (G) que ha aflojado en el paso 2.
7. Desmonte la plancha de original (B) y vuelva a colocar (vea los pasos 27 y 28 en la página 13).

---

5. Die obigen Schritte wiederholen, bis der Abstand der Linie (2) des Kopierbeispiels die folgenden Bezugswerte aufweist.
<Bezugswert> Einzelkopie: Der horizontale Abstand der Linie (2) sollte innerhalb von ±3,0 mm liegen.
Duplexkopie: Der horizontale Abstand der Linie (2) sollte innerhalb von ±4,0 mm liegen.
6. Nach der Einstellung die zwei M4 × 14TP Schrauben (G), die in Schritt 2 gelöst wurden, wieder festziehen.
7. Die Originalmatte (B) abnehmen und wieder anbringen (siehe Schritte 27 und 28 auf Seite 13).

---

5. Ripetere le operazioni sopra descritte fino a quando lo scostamento della linea (2) dell'esempio di copia riporterà i valori di riferimento seguenti.
<Valore di riferimento> Per la copia singola: lo scostamento orizzontale della linea (2) deve limitarsi a ± 3,0 mm.
Per la copia duplex: lo scostamento orizzontale della linea (2) deve limitarsi a ±4,0 mm.
6. Una volta conclusa la regolazione, serrare nuovamente le viti M4 × 14TP (G) che erano state allentate al Punto 2.
7. Rimuovere il coprioriginale (B) e reinserirlo (vedere i passi 27 e 28 a pagina 13).

---

5. 重复上述步骤直至复印样本上的线（2）的偏移值达到标准值范围内。
〈标准值〉单面时，线（2）的左右偏移值：±3.0㎜ 以内
双面时，线（2）的左右偏移值：±4.0㎜ 以内
6. 调整完成后，重新拧紧在步骤 2 中松开的两颗 M4×14TP 螺丝（G）。
7. 拆下原稿垫（B），参照第 13 页的步骤 27 和 28 再次装上。

---

5. 샘플 카피 선 (2) 차이가 기준치내가 될 때까지 조정을 반복합니다 .
<기준치>단면의 경우 선 (2) 의 좌우차이:±3.0mm 이내
양면의 경우 선 (2) 의 좌우차이:±4.0mm 이내
6. 조정 완료 후 스텝 2 에서 느슨하게 한 나사 M4×14TP(G) 2 개를 조입니다 .
7. 원고매트 (B) 를 제거하고 13 페이지 순서 27, 28 을 참고로 다시 부착합니다 .

---

5. コピーサンプルの線 (2) のずれが基準値内になるまで、調整を繰り返す。
＜基準値＞片面の場合、線 (2) の左右ずれ:±3.0㎜ 以内
両面の場合、線 (2) の左右ずれ:±4.0㎜ 以内
6. 調整終了後、手順 2 で緩めたビス M4×14TP(G)2 本を締め付ける。
7. 原稿マット (B) を取り外し、13 ページの手順 27、28 を参考に再度取り付ける。

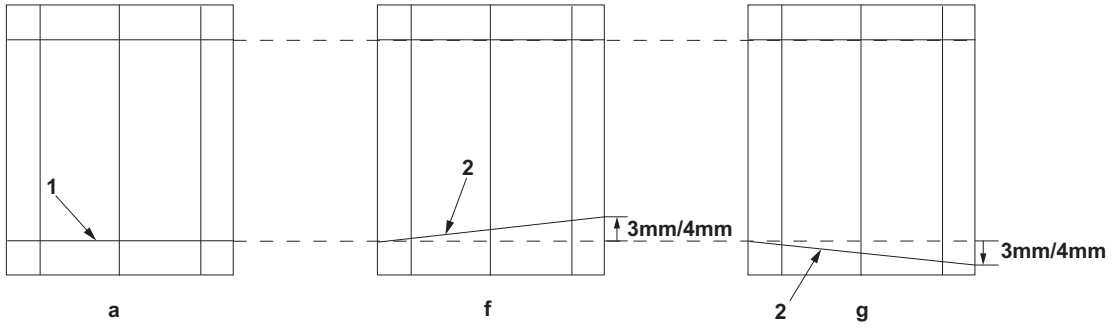

[Checking the angle of trailing edge]

1. Check the gap between line (1) of original (a) and line (2) of copy example. If the gap exceeds the reference value, perform the following adjustment.
<Reference value> For simplex copying: Within ±3.0 mm
For duplex copying: Within ±4.0 mm

[Vérification de l'angle du bord arrière]

1. Vérifiez l'écart entre la ligne (1) de l'original (a) et la ligne (2) de l'exemple de copie. Si l'écart est supérieur à la valeur de référence, effectuez le réglage suivant.
<Valeur de référence> Copie recto seul: ±3,0 mm max.
Copie recto verso: ±4,0 mm max.

[Verificación del ángulo del borde inferior]

1. Verifique la separación entre la línea (1) del original (a) y la línea (2) de la copia de muestra. Si la superación supera el valor de referencia, haga el siguiente ajuste.
<Valor de referencia> Para copia simple: Dentro de ±3,0 mm
Para copia duplex: Dentro de ±4,0 mm

[Überprüfen des Winkels der Hinterkante]

1. Die Abweichung der Linie (1) des Originals (a) und der Linie (2) des Kopienmusters prüfen. Überschreitet die Abweichung den Bezugswert, ist die folgende Einstellung durchzuführen.
<Bezugswert> Für Simplexkopie: Innerhalb ±3,0 mm
Für Duplexkopie: Innerhalb ±4,0 mm

[Controllo dell'angolo del bordo di uscita]

1. Controllare la differenza tra la linea (1) dell'originale (a) e la linea (2) della copia di esempio. Se la differenza supera il valore di riferimento, effettuare la seguente regolazione.
<Valore di riferimento> Per copia simplex: Entro ±3,0 mm
Per copia duplex: Entro ±4,0 mm

[确认后端倾斜度]

1. 确认原稿（a）上的线（1）和复印样本上的线（2）的偏移值。如果超过标准值时，必须进行调整。
〈标准值〉单面时：±3.0㎜ 以内
双面时：±4.0㎜ 以内

[후단 경사확인]

1. 원고 (a) 의 선 (1) 과 샘플 카피 선 (2) 의 차이를 확인합니다 . 차이가 기준치 외의 경우에는 조정을 합니다 .
＜기준치＞단면의 경우:±3.0m 이내
양면의 경우:±4.0mm 이내

[後端斜め確認]

1. 原稿 (a) の線 (1) とコピーサンプルの線 (2) のずれを確認する。ずれが基準値外の場合は調整をおこなう。
＜基準値＞片面の場合:±3.0㎜ 以内
両面の場合:±4.0㎜ 以内

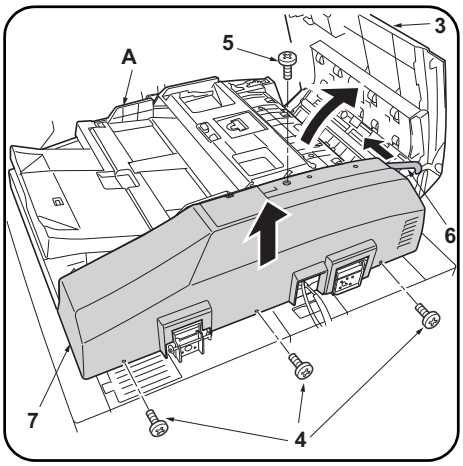

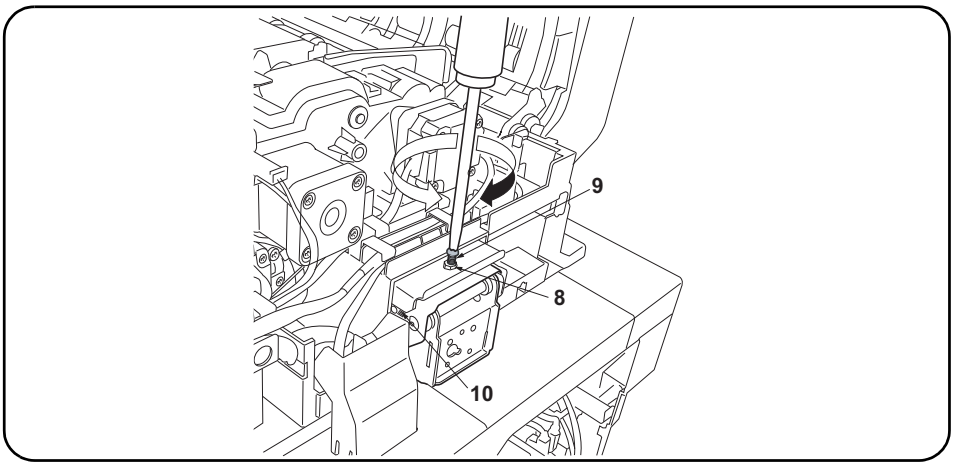

2. Open the upper cover (3) of the DP (A).
3. Remove the 3 TP screws (4) and the screw (5), and remove the strap (6) from the rear cover (7). Then remove the DP (A) rear cover (7).

4. Adjust the height of DP.
Loosen the nut (8).
For copy example (f): Loosen the adjusting screw (9).
For copy example (g): Tighten the adjusting screw (9).
Amount of change per scale: Approx. 0.5 mm (10)
Retighten the nut (8).
5. Refit the rear cover (7) removed in step 3.
6. Remove the original mat (B) and refit it (see steps 27 and 28 on page 13).

---

2. Ouvrir le couvercle supérieur (3) du DP (A)
3. Déposer les 3 vis TP (4) et la vis (5) puis déposer la courroie (6) du couvercle arrière (7). Déposer ensuite le couvercle arrière (7) du DP (A).

4. Réglez la hauteur du DP.
Desserrez l'écrou (8).
Pour l'exemple de copie (f): Desserrez la vis de réglage (9).
Pour l'exemple de copie (g): Serrez la vis de réglage (9).
Quantité de changement par pas: Environ 0,5 mm (10)
Resserrez l'écrou (8).
5. Reposer le couvercle arrière (7) déposé à l'étape 3.
6. Retirez le tapis d'original (B) et remettez-le en place. (Reportez-vous aux étapes 27 et 28 à la page 13).

---

2. Abra la cubierta superior (3) del DP (A).
3. Quite los 3 tornillos TP (4) y el tornillo (5) y quite la correa (6) de la cubierta trasera (7). Después, quite la cubierta trasera (7) del DP (A).

4. Ajuste la altura del DP.
Afloje la tuerca (8).
Para la copia de muestra (f): Afloje el tornillo de ajuste (9).
Para la copia de muestra (g): Apriete el tornillo de ajuste (9).
Cantidad de cambio de escala: Aprox. 0,5 mm (10)
Vuelva a apretar la tuerca (8).
5. Vuelva a colocar la cubierta (7) desmontada en el paso 3.
6. Desmonte la plancha de original (B) y vuelva a colocar (vea los pasos 27 y 28 en la página 13).

---

2. Die obere Abdeckung (3) des DP (A) öffnen.
3. Die 3 TP-Schrauben (4) und die Schraube (5) entfernen und den Riemen (6) von der hinteren Abdeckung (7) abnehmen. Dann die hintere Abdeckung (7) des DP (A) abnehmen.

4. Die Höhe des DP einstellen.
Lösen Sie die Mutter (8).
Für Kopienmuster (f): Lösen Sie die Einstellschraube (9).
Für Kopienmuster (g): Die Einstellschraube (9) festziehen.
Änderungsbetrag pro Skalenstrich: Ca. 0,5 mm (10)
Ziehen Sie die Mutter (8) wieder fest.
5. Die in Schritt 3 entfernte hintere Abdeckung (7) wieder anbringen.
6. Die Originalmatte (B) abnehmen und wieder anbringen (siehe Schritte 27und 28 auf Seite 13).

---

2. Aprire il pannello superiore (3) del DP (A).
3. Rimuovere le 3 viti TP (4) e la vite (5), e quindi rimuovere la cinghietta (6) dal coperchio posteriore (7). Quindi rimuovere il coperchio posteriore (7) del DP (A).

4. Regolazione dell'altezza del DP
Allentare il dado (8).
Per un esempio di copia (f): Allentare la vite di regolazione (9).
Per un esempio di copia (g): Stringere la vite di regolazione (9).
Variazione graduale: Circa 0,5 mm (10)
Stringere di nuovo il dado (8).
5. Reinserire il coperchio posteriore (7) rimosso nel passo 3.
6. Rimuovere il coprioriginale (B) e reinserirlo (vedere i passi 27 e 28 a pagina 13).

---

2. 打开 DP（A）的上盖板（3）。
3. 拆除 3 颗 TP 螺丝（4）和 1 颗螺丝（5），将塑料片（6）从后盖板（7）上拆除，拆下 DP 主机（A）的后盖板（7）。

4. 调整 DP 的高度。
松驰螺母（8）。
复印样张（f）时：松弛调整螺丝（9）。
复印样张（g）时：紧固调整螺丝（9）。
每 1 格的移动量：约 0.5mm（10）
将螺母（8）按原样紧固好。
5. 重新安装在步骤 3 中拆下的后盖板（7）。
6. 拆下原稿垫（B），参照第 13 页的步骤 27 和 28 再次装上。

---

2. DP(A) 의 DP 윗 커버 (3) 를 엽니다 .
3. TP 나사 (4) 3 개와 나사 (5) 1 개를 제거하고 스트랩 (6) 을 뒷면 커버 (7) 에서 제거해 DP(A) 의후면 커버 (7) 를 제거합니다 .

4. DP 의 높이를 조정합니다 .
너트 (8) 를 느슨하게 합니다 .
샘플 카피 (f) 의 경우:조정나사 (9) 를 느슨하게 합니다 .
샘플 카피 (g) 의 경우:조정나사 (9) 를 조입니다 .
1 개 변화량:약 0.5mm(10)
너트 (8) 를 원래대로 조입니다 .
5. 순서 3 에서 제거한 뒷 커버 (7) 를 원래대로 장착합니다 .
6. 원고매트 (B) 를 제거하고 13 페이지 순서 27, 28 을 참고로 다시 부착합니다 .

---

2. DP(A) の DP 上カバー(3) を開く。
3. TP ビス (4)3 本とビス (5)1 本を外し、ストラップ (6) を後カバー(7) から外して、DP(A) の後カバー(7) を取り外す。

4. DP の高さを調整する。
ナット (8) をゆるめる。
コピーサンプル (f) の場合:調整ビス (9) をゆるめる。
コピーサンプル (g) の場合:調整ビス (9) を締める。
1 目盛り当たりの変化量:約 0.5mm(10)
ナット (8) を元通り締める。
5. 手順 3 で取り外した後カバー(7) を元通り取り付ける。
6. 原稿マット (B) を取り外し、13 ページの手順 27、28 を参考に再度取り付ける。

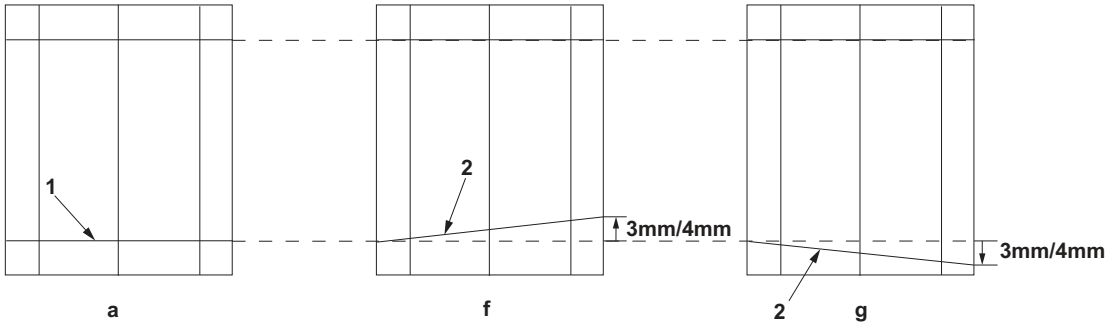

7. Make a proof copy again.
8. Repeat steps 1 to 6 until line (2) of copy example shows the following the reference values.
<Reference value> For simplex copying: Within ±3.0 mm
For duplex copying: Within ±4.0 mm

---

7. Effectuez à nouveau une copie de test.
8. Répétez les étapes 1 à 6 jusqu'à ce que la ligne (2) de l'exemple de copie corresponde aux valeurs de référence suivantes.
<Valeur de référence> Copie recto seul: ±3,0 mm max.
Copie recto verso: ±4,0 mm max.

---

7. Haga otra copia de prueba.
8. Repita los pasos 1 a 6 hasta que la línea (2) de la copia de muestra tenga los siguientes valores de referencia.
<Valor de referencia> Para copia simple: Dentro de ±3,0 mm
Para copia duplex: Dentro de ±4,0 mm

---

7. Eine erneute Probekopie anfertigen.
8. Die Schritte 1 bis 6 wiederholen, bis die Linie (2) des Kopienmusters die folgenden Bezugswerte aufweist.
<Bezugswert> Für Simplexkopie: Innerhalb ±3,0 mm
Für Duplexkopie: Innerhalb ±4,0 mm

---

7. Eseguire di nuovo una prova di copia.
8. Ripetere i passi da 1 a 6 fino a che la linea (2) dell'esempio di copia non mostra i seguenti valori di riferimento.
<Valore di riferimento> Per copia simplex: Entro ±3,0 mm
Per copia duplex: Entro ±4,0 mm

---

7. 再次进行测试复印。
8. 反复操作步骤 1~6，直至 复印样张的线（2）为标准值内。
〈标准值〉 单面时：±3.0㎜ 以内
双面时：±4.0㎜ 以内

---

7. 다시 테스트 카피를 합니다 .
8. 샘플 카피 선 (2) 이 기준치내로 될 때까지 순서 1 ~ 6 을 반복합니다 .
<기준치> 단면의 경우:±3.0m 이내
양면의 경우:±4.0mm 이내

---

7. 再度テストコピーをおこなう。
8. コピーサンプルの線 (2) が基準値内になるまで、手順 1 ～ 6 を繰り返す。
＜基準値＞片面の場合:±3.0㎜ 以内
両面の場合:±4.0㎜ 以内

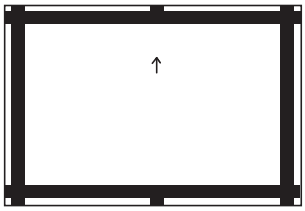

[Automatic adjustment using the original for adjustment]
If there is no DP auto adjustment original.

1. Set the maintenance mode U411, select [DP Auto Adj] and press the Start key to print an original.
2. Set the printed original on the contact glass and press the Start key.
3. Set the original on the DP face up and press the Start key to carry out surface adjustment.
4. Set the original on the DP face down and press the Start key to carry out rear-side adjustment.(DP-771/772 only)
5. If OK appears on the display, the adjustment is completed.
   If ERROR XX appears, the adjustment failed. Check the original set position and repeat steps 2 and 4 until OK appears.
   For details, see the service manual.

[Réglage automatique en utilisant l'original pour effectuer le réglage]
Si la machine n'est pas pourvue de la fonction réglage automatique d'original du DP

1. Régler le mode maintenance U411, sélectionner [DP Auto Adj] et appuyer sur la touche Start pour imprimer un original.
2. Placer l'original qui vient d'être imprimé sur la vitre d'exposition et appuyer sur la touche Start.
3. Placer l'original sur le DP côté imprimé en haut et appuyer sur la touche Start pour procéder au réglage de la surface.
4. Placer l'original sur le DP côté imprimé en bas et appuyer sur la touche Start pour procéder au réglage du côté arrière.(DP-771/772 uniquement)
5. Si le message OK apparaît sur l'affichage, le réglage est terminé.Si le message ERROR XX (erreur XX) s'affiche, le réglage a échoué. Vérififer la position de l'original et recommencer les opérations 2 et 4 jusqu'à ce que le message OK apparaisse.
   Pour plus de details, se reporter au manuel d'entretien.

[Ajuste automático utilizando el original para el ajuste]
Si no existe el original de ajuste automático del DP

1. Entre al modo de mantenimiento U441, seleccione [DP Auto Adj] y pulse la tecla de Start para imprimir un original.
2. Coloque el original impreso sobre el cristal de contacto y pulse la tecla de Start.
3. Coloque el original en el DP cara arriba y pulse la tecla de Start para realizar un ajuste de anverso.
4. Coloque el original en el DP cara abajo y pulse la tecla de Start para realizar un ajuste de reverso.(DP-771/772 solamente)
5. Si aparece OK en la pantalla significa que el ajuste ha sido realizado.
   Si aparece ERROR XX, el ajuste ha fallado. Compruebe la posición ajustada del original y repita los pasos 2 y 4 hasta que aparezca OK en la pantalla.
   Para mas detalles, lea el manual de servicio.

[Automatische Einstellung mithilfe des Originals]
Falls keine automatische Einstellung des Originals des DP vorhanden ist

1. Den Wartungsmodus U411 einschalten. [DP Auto Adj] wählen und die Start-Taste betätigen, um ein Original auszudrucken.
2. Das ausgedruckte Original auf das Kontaktglas legen und die Start-Taste betätigen.
3. Das Original mit der Druckseite nach oben einlegen und die Start-Taste betätigen, um die Oberflächeneinstellung ausführen zu lassen.
4. Das Original mit der Druckseite nach unten einlegen und die Start-Taste betätigen, um die Rückseiteneinstellung ausführen zu lassen. (nur DP-771/772)
5. Wenn am Display OK angezeigt wird, ist die Einstellung abgeschlossen. Wenn ERROR XX (FEHLER XX) angezeigt wird, ist die Einstellung fehlgeschlagen. Überprüfen Sie die Originalpositionierung und wiederholen Sie Schritte 2 und 4, bis OK angezeigt wird.
   Weitere Einzelheiten siehe Wartungsanleitung.

[Regolazione automatica eseguita con l'originale]
Se non è presente l'autoregolazione originale DP

1. Impostare la modalità manutenzione U411, selezionare [DP Auto Adj] e premere il tasto di Start per stampare un originale.
2. Posizionare l'originale stampato sul vetro di appoggio e premere il tasto di Start.
3. Posizionare l'originale sul DP rivolto verso l'alto e premere il tasto di Start per eseguire la regolazione della superficie.
4. Posizionare l'originale sul DP rivolto verso il basso e premere il tasto di Start per eseguire la regolazione del lato posteriore. (Solo DP-771/772)
5. Se OK appare sul display, la regolazione è completata.Se compare ERROR XX (ERRORE XX), la regolazione non è riuscita. Verificare la posizione di impostazione dell'originale e ripetere le operazioni 2 e 4
   fino a quando appare OK.
   Per ulteriori dettagli leggere il manuale d'istruzioni.

[通过调整用原稿进行自动调整]
没有 DP 调整用原稿时

1. 设置维护模式 U411，按 [DP Auto Adj]、Start 键以输出原稿。
2. 将输出的原稿放在稿台上，按 Start 键。
3. 将原稿面朝上放在 DP 主机上，按 Start 键以进行正面的调整。
4. 将原稿面朝下放在 DP 主机上，按 Start 键以进行反面的调整。(仅限 DP-771/772)
5. 如果屏幕上出现 OK（完成），则表示调整完成。
   如果出现 ERROR XX（错误 XX），则表示调整失败。检查原稿设定位置并重复步骤 2 和 4，直到 OK（完成）出现。
   详细内容请参照维修手册。

[조정용 원고를 이용한 자동조정]
DP 조정용 원고가 없는 경우

1. 메인터넌스 모드 U411 을 세트하고 [DP Auto Adj], 시작키를 눌러 원고를 출력합니다 .
2. 출력한 원고를 원고 유리에 장착하고 시작키를 누릅니다 .
3. 원고를 FaceUp 으로 DP 로 세트하고 시작키를 눌러 표면조정을 합니다 .
4. 원고를 FaceDown 으로 DP 에 장착하고 시작키를 눌러 뒷면조정을 합니다 . (DP-771/772 만)
5. 디스플레이에 OK 가 표시되면 조정완료가 됩니다 .
   ERROR XX 가 표시된 경우에는 조정실패입니다 . 원고 장착위치를 확인하고 OK 가 표시될 때까지 순서 2 ~ 4 를 반복합니다 .
   상세는 서비스 매뉴얼을 참조

[調整用原稿による自動調整]
DP 調整用原稿が無い場合

1. メンテナンスモード U411 をセットし、[DP Auto Adj]、Start キーを押し原稿を出力する。
2. 出力した原稿をコンタクトガラス上にセットし、Start キーを押す。
3. 原稿を FaceUp で DP へセットし、Start キーを押し、表面の調整を行う。
4. 原稿を FaceDown で DP へセットし、Start キーを押し、裏面の調整を行う。(DP-771/772 のみ)
5. ディスプレイに OK が表示されれば調整完了となる。
   ERROR XX が表示された場合は調整失敗である。原稿のセット位置を確認し、OK が表示されるまで手順 2 ～ 4 を繰り返す。
   詳細はサービスマニュアルを参照のこと。

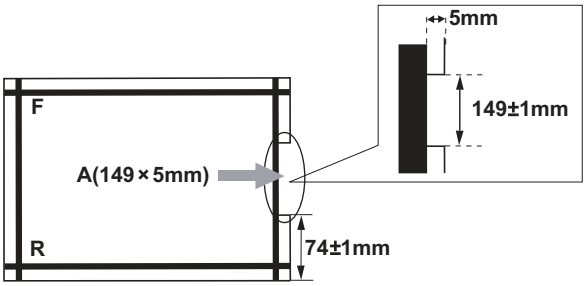

Using a DP auto adjustment original

1. Direct F and R of the DP auto adjustment original upward, and set the original from the place where F and R are marked.
2. Set the maintenance mode U411. Press the [DP FaceUp (Chart2)], [Input] and the Start key in that order to carry out surface adjustment.
3. If OK appears on the display, the adjustment is completed.
   If ERROR XX appears, the adjustment failed. Check the original set position and repeat steps 1 and 2 until OK appears.
   For details, see the service manual.

Avec la fonction réglage automatique d'original du DP

1. Diriger F (avant) et R (arrière) de la fonction de réglage automatique d'original du DP vers le haut, puis placer l'original à partir de l'emplacement des repères F et R.
2. Passer au mode maintenance U411. Appuyer sur les touches [DP FaceUp (Chart2)], [Input] et Start dans cet ordre pour procéder au réglage de la surface.
3. Si le message OK apparaît sur l'affichage, le réglage est terminé.Si le message ERROR XX (erreur XX) s'affiche, le réglage a échoué. Vérifier la position de l'original et recommencer les opérations 1 et 2 jusqu'à ce que le message OK apparaisse.
   Pour plus de details, se reporter au manuel d'entretien.

Uso del original de ajuste automático del DP

1. Dirija F y R del original de ajuste automático del DP hacia arriba, y coloque el original a partir del sitio en que están marcados F y R.
2. Entre en el modo de mantenimiento U411. Pulse las teclas [DP FaceUp (Chart2)], [Input] y la tecla de Start, en ese orden, para realizar el ajuste de anverso.
3. Si aparece OK en la pantalla significa que el ajuste ha sido realizado. Si aparece ERROR XX, el ajuste ha fallado. Compruebe la posición ajustada del original y repita los pasos 1 y 2 hasta que aparezca OK en la pantalla.
   Para mas detalles, lea el manual de servicio.

Gebrauch der automatischen Einstellung des Originals des DP

1. F und R der automatischen Einstellung des Originals des DP nach oben zeigen und das Original an die mit F und R markierte Stelle setzen.
2. Den Wartungsmodus U411 einschalten. [DP Faceup (Chart2)], [Input] und die Start-Taste in dieser Reihenfolge betätigen, um die Oberflächeneinstellung ausführen zu lassen.
3. Wenn am Display OK angezeigt wird, ist die Einstellung abgeschlossen. Wenn ERROR XX (FEHLER XX) angezeigt wird, ist die Einstellung fehlgeschlagen. Überprüfen Sie die Originalpositionierung und wiederholen Sie Schritte 1 und 2, bis OK angezeigt wird.
   Weitere Einzelheiten siehe Wartungsanleitung.

Uso di un'autoregolazione originale DP

1. Orientare F e R dell'autoregolazione originale DP verso l'alto e disporre l'originale rispetto ai punti in cui sono contrassegnati F e R.
2. Impostare la modalità manutenzione U411. Premere nell'ordine [DP FaceUp (Chart2)], [Input] e il tasto di Start, per eseguire la regolazione della superficie.
3. Se OK appare sul display, la regolazione è completata.Se compare ERROR XX (ERRORE XX), la regolazione non è riuscita. Verificare la posizione di impostazione dell'originale e ripetere le operazioni 1 e 2 fino a quando appare OK.
   Per ulteriori dettagli leggere il manuale d'istruzioni.

使用 DP 自动调整用稿时

1. 将 DP 自动调整原稿的 F 和 R 向上，并把标有 F 和 R 的一侧插入 DP 来设定原稿。
2. 设置维护模式 U411，按顺序按 [DP FaceUp(Chart2)]、[Input]、Start 键以进行正面的调整。
3. 如果屏幕上出现 OK（完成），则表示调整完成。
   如果出现 ERROR XX（错误 XX），则表示调整失败。检查原稿设定位置并重复步骤 1 和 2，直到 OK（完成）出现。
   详细内容请参照维修手册。

DP 자동조정용 원고를 사용하는 경우

1. DP 자동 조정 원고를 F, R 을 위로 향하게 하고 F, R 이라고 표시된 곳에서 부터 원고를 셋팅합니다 .
2. 메인터넌스 모드 U411 을 세트하고 [DP FaceUp(Chart2)], [Input], 시작키의 순서로 눌러 표면 조정을 합니다 .
3. 디스플레이에 OK 가 표시되면 조정완료가 됩니다 .
   ERROR XX 가 표시된 경우에는 조정실패입니다 . 원고 장착위치를 확인하고 OK 가 표시될 때까지 순서 1 ~ 2 를 반복합니다 .
   상세는 서비스 매뉴얼을 참조 .

DP 自動調整原稿を使用する場合

1. DP 自動調整原稿の F、R を上に向け、F、R が書かれている方から DP へセットする。
2. メンテナンスモード U411 をセットし、[DP FaceUp(Chart2)]、[Input]、Start キーの順に押し、表面の調整を行う。
3. ディスプレイに OK が表示されれば調整完了となる。
   ERROR XX が表示された場合は調整失敗である。原稿のセット位置を確認し、OK が表示されるまで手順 1 ～ 2 を繰り返す
   詳細はサービスマニュアルを参照のこと。

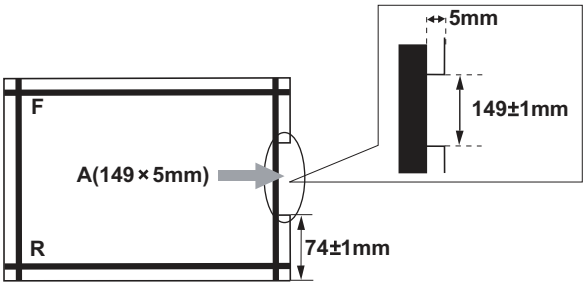

4. After completing the surface adjustment, direct F and R of the DP auto adjustment original downward and set the original by inserting the side where the F and R are marked into the DP first.(DP-771/772 only)

5. Set the maintenance mode U411. Press the [DP FaceDown (Chart2)], [Normal Target], [Input] and the Start key in that order to carry out rear-side adjustment.(DP-771/772 only)

6. If OK appears on the display, the adjustment is completed.(DP-771/772 only)
If ERROR XX appears, the adjustment failed. Check the original set position and repeat steps 4 and 5 until OK appears.
For details, see the service manual.

---

4. Une fois le réglage de la surface effectué, diriger F (avant) et R (arrière) de la fonction de réglage automatique d'original du DP vers le bas et placer l'original en introduisant en premier dans le DP le côté sur lequel F et R sont indiqués.(DP-771/772 uniquement)

5. Passer au mode maintenance U411. Appuyer sur les touches [DP FaceDown (Chart2)], [Normal Target], [Input] et Start dans cet ordre pour procéder au réglage du côté arrière.(DP-771/772 uniquement)

6. Si le message OK apparaît sur l'affichage, le réglage est terminé. (DP-771/772 uniquement)
Si le message ERROR XX (erreur XX) s'affiche, le réglage a échoué. Vérififer la position de l'original et recommencer les opérations 4 et 5 jusqu'à ce que le message OK apparaisse.
Pour plus de details, se reporter au manuel d'entretien.

---

4. Una vez hecho el ajuste del anverso, dirija F y R del original de ajuste automático del DP hacia abajo y coloque el original insertando en el DP, en primer lugar, el lado en el que están marcados F y R.(DP-771/772 solamente)

5. Entre en el modo de mantenimiento U411. Pulse las teclas [DP FaceDown (Chart2)], [Normal Target], [Input] y la tecla de Start, en ese orden, para realizar el ajuste de reverso.(DP-771/772 solamente)

6. Si aparece OK en la pantalla significa que el ajuste ha sido realizado.(DP-771/772 solamente)
Si aparece ERROR XX, el ajuste ha fallado. Compruebe la posición ajustada del original y repita los pasos 4 y 5 hasta que aparezca OK en la pantalla.
Para mas detalles, lea el manual de servicio.

---

4. Nach dem Abschluss der Oberflächeneinstellung F und R der automatischen Einstellung des Originals des DP nach unten zeigen und das Original einstellen, indem die mit F und R markierte Seite zuerst in den DP eingeführt wird.(nur DP-771/772)

5. Den Wartungsmodus U411 einschalten. [DP FaceDown (Chart2)], [Normal Target], [Input] und die Start-Taste in dieser Reihenfolge betätigen, um die Rückseiteneinstellung ausführen zu lassen.(nur DP-771/772)

6. Wenn am Display OK angezeigt wird, ist die Einstellung abgeschlossen.(nur DP-771/772)
Wenn ERROR XX (FEHLER XX) angezeigt wird, ist die Einstellung fehlgeschlagen. Überprüfen Sie die Originalpositionierung und wiederholen Sie Schritte 4 und 5, bis OK angezeigt wird.
Weitere Einzelheiten siehe Wartungsanleitung.

---

4. Una volta conclusa la regolazione della superficie, orientare F e R dell'autoregolazione originale DP verso il basso e disporre l'originale inserendo nel DP prima il lato su cui sono contrassegnati F e R.(Solo DP-771/772)

5. Impostare la modalità manutenzione U411. Premere nell'ordine [DP FaceDown (Chart2)], [Normal Target], [Input] e il tasto di Start, per eseguire la regolazione del lato posteriore.(Solo DP-771/772)

6. Se OK appare sul display, la regolazione è completata.(Solo DP-771/772)
Se compare ERROR XX (ERRORE XX), la regolazione non è riuscita. Verificare la posizione di impostazione dell'originale e ripetere le operazioni 4 e 5 fino a quando appare OK.
Per ulteriori dettagli leggere il manuale d'istruzioni.

---

4. 完成正面调整后，将 DP 自动调整原稿的 F 和 R 向下，并首先将标有 F 和 R 的一侧插入 DP 来设定原稿。(仅限 DP-771/772)
5. 设置维护模式 U411，按顺序按 [DP FaceDown(Chart2)]、[Normal Taget]、[Input]、Start 键以进行反面的调整。(仅限 DP-771/772)

6. 如果屏幕上出现 OK（完成），则表示调整完成。(仅限 DP-771/772)
如果出现 ERROR XX（错误 XX），则表示调整失败。检查原稿设定位置并重复步骤 4 和 5，直到 OK（完成）出现。
详细内容请参照维修手册。

---

4. 표면의 조정완료 후 DP 자동조정원고의 F, R 을 아래로 향하게 해 F, R 이 쓰여져 있는 쪽에서 DP 로 세트합니다 . (DP-771/772 만)
5. 메인터넌스 모드 U411 을 세트하고 [DP FaceDown(Chart2)], [Normal Taget], [Input], 시작키 순서로 뒷면조정을 합니다 . (DP-771/772 만)

6. 디스플레이에 OK 가 표시되면 조정완료가 됩니다 . (DP-771/772 만)
ERROR XX 가 표시된 경우에는 조정실패입니다 . 원고 장착위치를 확인하고 OK 가 표시될 때까지 순서 4 ~ 5 를 반복합니다 .
상세는 서비스 매뉴얼을 참조

---

4. 表面の調整完了後、DP 自動調整原稿の F、R を下に向け、F、R が書かれている方から DP へセットする。(DP-771/772 のみ)
5. メンテナンスモード U411 をセットし、[DP FaceDown(Chart2)]、[Normal Taget]、[Input]、Start キーの順に押し、裏面の調整を行う。(DP-771/772 のみ)

6. ディスプレイに OK が表示されれば調整完了となる。(DP-771/772 のみ)
ERROR XX が表示された場合は調整失敗である。原稿のセット位置を確認し、OK が表示されるまで手順 4 ～ 5 を繰り返す。
詳細はサービスマニュアルを参照のこと。

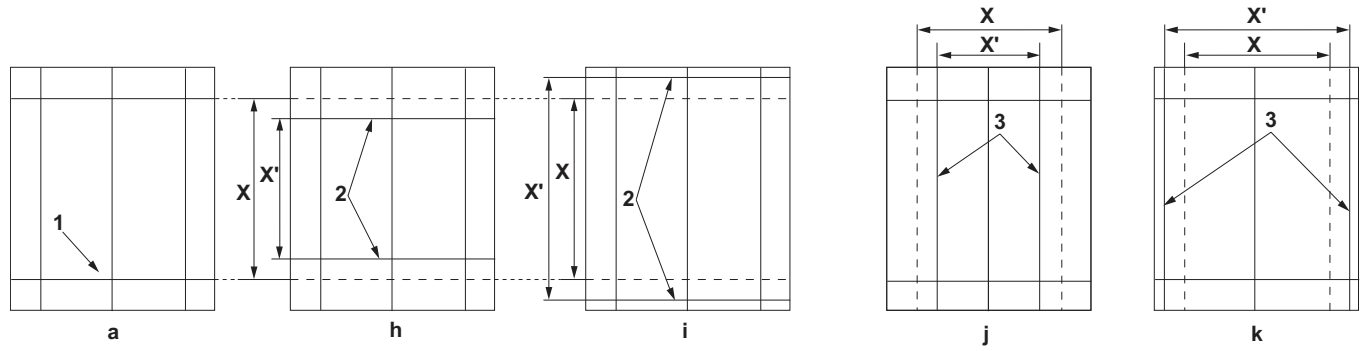

$$-1.5\% \leqq \frac{X - X'}{X} \times 100 \leqq +1.5\%$$

[Checking the magnification]

1. Check the gap between line (1) of original (a) and line (2) (3) of copy example. If the gap exceeds the reference value, adjust the gap according to the following procedure.
<Reference value>
For the sub-scan direction, vertical gap of line (2): within ±1.5%
For the main-scan direction, horizontal gap of line (3): within ±1.5%

2. Use the maintenance mode U070 to adjust the magnification.
Sub Scan(F): Adjusts the scanner sub-scan magnification (surface)
Sub Scan(B): Adjusts the scanner sub-scan magnification (rear side) (DP-770(B))
Main Scan(CIS):Adjusts the scanner CIS main-scan magnification (DP-771/772)
Scan (CIS): Adjusts the scanner CIS sub-scan magnification (DP-771/772)

[Vérification de l'agrandissement]

1. Vérifier l'écart entre la ligne (1) de l'original (a) et la ligne (2) (3) de l'exemple de copie. Si l'écart excède la valeur de référence, le régler selon la procédure suivante.
<Valeur de référence>
Pour la direction du balayage secondaire, l'écart vertical de la ligne (2) est de ±1,5%
Pour la direction du balayage principal, l'écart horizontal de la ligne (3) est de ±1,5%

2. Pour régler l'agrandissement, utilisez le mode entretien U070.
Sub Scan(F): Permet de régler l'agrandissement du balayage secondaire du scanner(surface)
Sub Scan(B): Permet de régler l'agrandissement du balayage secondaire du scanner (arrière)(DP-770(B))
Main Scan (CIS):Permet de régler l'agrandissement du balayage principal du CIS du scanner (DP-771/772)
Sub Scan (CIS): Permet de régler l'agrandissement du balayage secondaire du CIS du scanner (DP-771/772)

[Verificación del cambio de tamaño]

1. Compruebe la separación entre la línea (1) del original (a) y la línea (2) (3) del ejemplo de copia. Si la separación supera el valor de referencia, ajústela siguiendo este procedimiento.
<Valor de referencia>
Para la dirección de exploración secundaria, separación vertical de la línea (2): dentro de ±1,5%
Para la dirección de exploración principal, separación horizontal de la línea (3): dentro de ±1,5%

2. Para ajustar la ampliación utilice el modo de mantenimiento U070.
Sub Scan(F): ajusta el cambio de tamaño de la dirección de exploración secundaria del escáner.(anverso)
Sub Scan(B): ajusta el cambio de tamaño de la dirección de exploración secundaria del escáner (reverso) (DP-770(B))
Main Scan(CIS):Ajusta el cambio de tamaño de la dirección de exploración principal CIS del escáner (DP-771/772)
Sub Scan (CIS): ajusta el cambio de tamaño de la dirección de exploración secundaria CIS del escáner (DP-771/772)

[Überprüfen der Vergrößerung]

1. Den Abstand zwischen der Linie (1) des Originals (a) und der Linie (2) (3) des Kopierbeispiels prüfen. Wenn der Abstand größer als der Bezugswert ist, den Abstand mit dem folgenden Verfahren einstellen.
<Bezugswert>
Subscanrichtung: Vertikaler Abstand der Linie (2): Innerhalb ±1,5%
Hauptscanrichtung: Horizontaler Abstand der Linie (3): Innerhalb ±1,5%

2. Zum Einstellen der Vergrößerung den Wartungsmodus U070 verwenden.
Sub Scan(F): Zur Einstellung der Subscan-Vergrößerung(Oberfläche)
Sub Scan(B): Zur Einstellung der Subscan-Vergrößerung(Rückseite)(DP-770(B))
Main Scan(CIS):Zur Einstellung der Scanner-CIS-Mainscan-Vergrößerung (DP-771/772)
Sub Scan (CIS): Zur Einstellung der Scanner-CIS-Subscan-Vergrößerung (DP-771/772)

[Controllo dell'ingrandimento]

1. Verificare lo scostamento fra la linea (1) dell'originale (a) e la linea (2) (3) dell'esempio di copia. Se lo scostamento supera il valore di riferimento, regolare lo scostamento stesso seguendo questa procedura.
<Valore di riferimento>
Per l'orientamento della scansione ausiliare, lo scostamento verticale della linea (2) deve essere compreso fra ±1,5%
Per l'orientamento della scansione principale, lo scostamento orizzontale della linea (3) deve essere compreso fra ±1,5%

2. Usare la modalità di manutenzione U070 per regolare l'ingrandimento.
Sub Scan(F): Regola l'ingrandimento della scansione ausiliare dello scanner(superficie)
Sub Scan(B): Regola l'ingrandimento della scansione ausiliare dello scanner(lato posteriore)(DP-770(B))
Main Scan (CIS):Regola l'ingrandimento della scansione principale CIS dello scanner (DP-771/772)
Sub Scan (CIS): Regola l'ingrandimento della scansione ausiliare CIS dello scanner (DP-771/772)

[确认等倍值]

1. 确认原稿（a）上的线（1）和复印样本上的线（2）、（3）之间的偏移值。
如果偏移值超过标准值，则按照下列步骤进行调整。
〈 标准值 〉
对于副扫描方向，线（2）的上下偏移值：±1.5% 以内
对于主扫描方向，线（3）的左右偏移值：±1.5% 以内

2. 使用维修模式 U070 调整等倍值。
Sub Scan(F)：读取副扫描等倍度的调整（正面）
Sub Scan(B)：读取副扫描等倍度的调整（反面）(DP-770(B))
Main Scan(CIS)：CIS 的读取主扫描等倍度的调整 (DP-771/772)
Sub Scan(CIS)：CIS 的读取副扫描等倍度的调整 (DP-771/772)

[등배도확인]

1. 원고 (a) 선 (1) 과 샘플 카피의 선 (2)(3) 의 차이를 확인합니다 .
차이가 기준이외의 경우 , 다음 순서로 조정을 합니다 .
＜기준치＞
부주사 방향의 경우 선 (2) 의 상하차이:±1.5% 이내
주주사 방향의 경우 선 (3) 의 좌우차이:±1.5% 이내

2. 메인터넌스 모드 U070 을 세트하고 조정을 합니다 .
Sub Scan(F):스캔 부주사등배도의 조정 (표면)
Sub Scan(B):스캔 부주사등배도의 조정 (뒷면) (DP-770(B))
Main Scan(CIS):CIS 의 스캔 주주사등배도의 조정 (DP-771/772)
Sub Scan(CIS):CIS 의 스캔 부주사등배도의 조정 (DP-771/772)

[等倍度確認]

1. 原稿 (a) の線 (1) とコピーサンプルの線 (2)(3) のずれを確認する。
ずれが基準値外の場合、次の手順で調整を行う。
＜基準値＞
副走査方向の場合、線 (2) の上下ずれ:±1.5% 以内
主走査方向の場合、線 (3) の左右ずれ:±1.5% 以内

2. メンテナンスモード U070 をセットし、調整を行う。
Sub Scan(F):読み取り副走査等倍度の調整 (表面)
Sub Scan(B):読み取り副走査等倍度の調整 (裏面) (DP-770(B))
Main Scan(CIS):CIS の読み取り主走査等倍度の調整 (DP-771/772)
Sub Scan(CIS):CIS の読み取り副走査等倍度の調整 (DP-771/772)

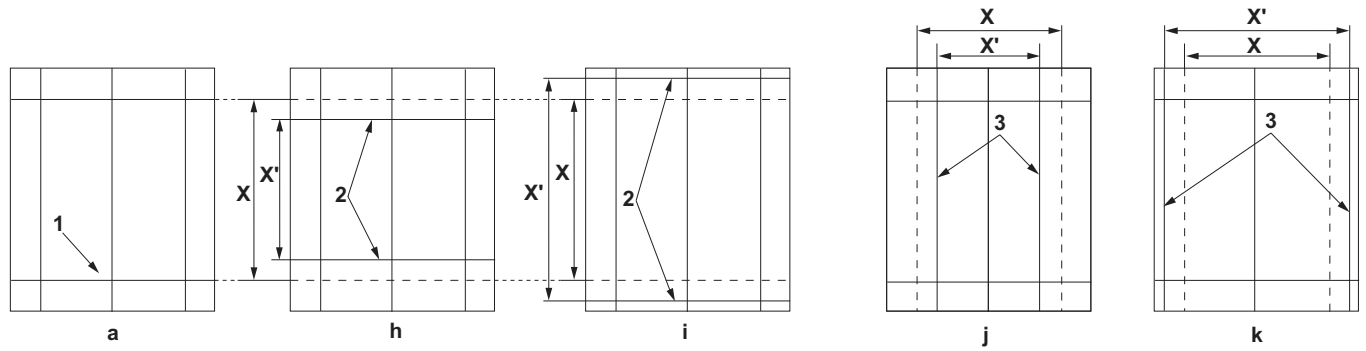

$$-1.5\% \leqq \frac{X - X'}{X} \times 100 \leqq +1.5\%$$

3. Adjust the values.
For the shorter length copy example (h)(j): Increases the value.
For the longer length copy example (i)(k): Decreases the value.
Amount of change per step: 0.10 %

4. Perform a test copy.

5. Repeat the steps 2 to 4 above until the gap of line (2) (3) of copy example shows the reference value.
<Reference value>
For the sub-scan direction, vertical gap of line (2): within ±1.5%
For the main-scan direction, horizontal gap of line (3): within ±1.5%

---

3. Régler les valeurs.
Pour l'exemple de copie dont la longueur est plus courte (h)(j) : augmenter la valeur.
Pour l'exemple de copie dont la longueur est plus longue (i)(k) : diminuer la valeur.
Changement par graduation d'échelle : 0,10 %

4. Effectuer une copie de test.

5. Répéter les étapes 2 à 4 jusqu'à ce que l'écart de la ligne (2) (3) de l'exemple de copie indique la valeur de référence.
<Valeur de référence>
Pour la direction du balayage secondaire, l'écart vertical de la ligne (2) est de ±1,5%
Pour la direction du balayage principal, l'écart horizontal de la ligne (3) est de ±1,5%

---

3. Ajuste los valores.
Para el ejemplo de copia más corto (h)(j): aumenta el valor.
Para el ejemplo de copia más largo (i)(k): disminuye el valor.
Magnitud del cambio por incremento: 0,10 %

4. Haga una copia de prueba.

5. Repita los pasos 2 a 4 anteriores hasta que la separación de la línea (2) (3) del ejemplo de copia presente el valor de referencia.
<Valor de referencia>
Para la dirección de exploración secundaria, separación vertical de la línea (2): dentro de ±1,5%
Para la dirección de exploración principal, separación horizontal de la línea (3): dentro de ±1,5%

---

3. Die Werte einstellen.
Für die kürzere Länge des Kopierbeispiels (h)(j): Den Wert erhöhen.
Für die längere Länge des Kopierbeispiels (i)(k): Den Wert verringern.
Änderung pro Schritt: 0,10 %

4. Eine Testkopie erstellen.

5. Die Schritte 2 bis 4 wiederholen, bis der Abstand der Linie (2) (3) des Kopierbeispiels den Bezugswert aufweist.
<Bezugswert>
Subscanrichtung: Vertikaler Abstand der Linie (2): Innerhalb ±1,5%
Hauptscanrichtung: Horizontaler Abstand der Linie (3): Innerhalb ±1,5%

---

3. Regolare i valori.
Per l'esempio di copia di lunghezza inferiore (h)(j): aumenta il valore.
Per l'esempio di copia di lunghezza superiore (i)(k): riduce il valore.
Entità modifica per passo: 0,10 %

4. Eseguire una copia di prova

5. Ripetere le operazioni sopra descritte da 2 a 4 fino a quando lo scostamento della linea (2) (3) dell'esempio di copia riporterà i valori di riferimento.
<Valore di riferimento>
Per l'orientamento della scansione ausiliare, lo scostamento verticale della linea (2) deve essere compreso fra ±1,5%
Per l'orientamento della scansione principale, lo scostamento orizzontale della linea (3) deve essere compreso fra ±1,5%

---

3. 调整设定值。
在长度偏短时　复印样本（h）（j）：调高设定值
在长度偏长时　复印样本（i）（k）：调低设定值
设定值的一个调整单位变化量：0.10%

4. 进行测试复印。

5. 重复上述步骤 2 到 4，直至复印样本上的线（2）、（3）之间的偏移值达到标准值范围内。
〈标准值〉
对于副扫描方向，线（2）的上下偏移值：±1.5% 以内
对于主扫描方向，线（3）的左右偏移值：±1.5% 以内

---

3. 설정치를 조정합니다 .
길이가 짧은 경우 샘플 카피 (h)(j):설정치를 높입니다 .
길이가 긴 경우 샘플 카피 (i)(k):설정치를 내립니다 .
1 스텝당 변화량:0.10%

4. 테스트 카피를 합니다 .

5. 샘플 카피 선 (2)(3) 의 차이가 기준치내가 될 때까지 2 ~ 4 를 반복합니다 .
＜기준치＞
부주사 방향의 경우 선 (2) 의 상하차이:±1.5% 이내
주주사 방향의 경우 선 (3) 의 좌우차이:±1.5% 이내

---

3. 設定値を調整する。
長さが短い場合コピーサンプル (h)(j):設定値を上げる
長さが長い場合コピーサンプル (i)(k):設定値を下げる
1 ステップ当たりの変化量:0.10%

4. テストコピーを行う。

5. コピーサンプルの線 (2)(3) のずれが基準値内になるまで手順 2 ～ 4 を繰り返す。
＜基準値＞
副走査方向の場合、線 (2) の上下ずれ:±1.5% 以内
主走査方向の場合、線 (3) の左右ずれ:±1.5% 以内

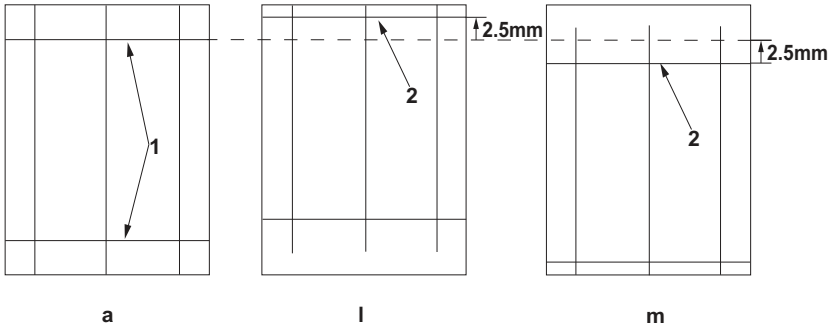

[Checking the leading edge timing]

1. Check the gap between line (1) on original (a) and line (2) of copy example. If the gap exceeds the reference value, adjust the gap according to the following procedure.
   <Reference value>
   Vertical gap of line (2): within ±2.5 mm

2. Use the maintenance mode U071 to adjust the timing.
   Front Head: Adjusts the leading edge timing (surface)
   Front Tail: Adjusts the trailing edge timing (surface)
   CIS Head: Adjusts the leading edge timing for CIS scanning.(DP-771/772)
   CIS Tail: Adjusts the trailing edge timing for CIS scanning.(DP-771/772)
   Back Head: Adjusts the leading edge timing (rear side)(DP-770(B))
   Back Tail: Adjusts the trailing edge timing (rear side)(DP-770(B))

[Vérification de la synchronisation du bord avant]

1. Vérifier l'écart entre la ligne (1) de l'original (a) et la ligne (2) de l'exemple de copie. Si l'écart excède la valeur de référence, le régler selon la procédure suivante.
   <Valeur de référence>
   Écart vertical de la ligne (2) : ±2,5 mm

2. Pour régler la synchronisation, utilisez le mode entretien U071.
   Front Head: Permet de régler la synchronisation du bord de tête (surface)
   Front Tail: Permet de régler la synchronisation du bord arrière (surface)
   CIS Head: Permet de régler la synchronisation du bord de tête pour le balayage par le CIS.(DP-771/772)
   CIS Tail: Permet de régler la synchronisation du bord arrière pour le balayage par le CIS.(DP-771/772)
   Back Head: Permet de régler la synchronisation du bord de tête (arrière)(DP-770(B))
   Back Tail: Permet de régler la synchronisation du bord arrière (arrière)(DP-770(B))

[Cambio de la sincronización de borde superior]

1. Compruebe la separación entre la línea (1) del original (a) y la línea (2) del ejemplo de copia. Si la separación supera el valor de referencia, ajústela siguiendo este procedimiento.
   <Valor de referencia>
   Separación vertical de la línea (2): dentro de ±2,5 mm

2. Para ajustar la sincronización utilice el modo de mantenimiento U071.
   Front Head: Ajusta la sincronización del borde superior (anverso).
   Front Tail: Ajusta la sincronización del borde inferior (anverso).
   CIS Head: Ajusta la sincronización del borde superior para exploración CIS.(DP-771/772)
   CIS Tail: Ajusta la sincronización del borde inferior para exploración CIS.(DP-771/772)
   Back Head: Ajusta la sincronización del borde superior (reverso).(DP-770(B))
   Back Tail: Ajusta la sincronización del borde inferior (reverso).(DP-770(B))

[Überprüfen des Vorderkanten-Timings]

1. Den Abstand zwischen der Linie (1) des Originals (a) und der Linie (2) des Kopierbeispiels prüfen. Wenn der Abstand größer als der Bezugswert ist, den Abstand mit dem folgenden Verfahren einstellen.
   <Bezugswert>
   Vertikaler Abstand der Linie (2): Innerhalb ±2,5 mm

2. Zum Einstellen des Timing den Wartungsmodus U071 verwenden.
   Front Head: Zur Einstellung des Vorderkanten-Timing (Oberfläche)
   Front Tail: Zur Einstellung des Hinterkanten-Timing (Oberfläche)
   CIS Head: Zur Einstellung des Vorderkanten-Timing für CIS-Scannen.(DP-771/772)
   CIS Tail: Zur Einstellung des Hinterkanten-Timing für CIS-Scannen.(DP-771/772)
   Back Head: Zur Einstellung des Vorderkanten-Timing (Rückseite)(DP-770(B))
   Back Tail: Zur Einstellung des Hinterkanten-Timing (Rückseite)(DP-770(B))

[Controllo della sincronizzazione del bordo principale]

1. Verificare lo scostamento fra la linea (1) sull'originale (a) e la linea (2) dell'esempio di copia. Se lo scostamento supera il valore di riferimento, regolare lo scostamento stesso seguendo questa procedura.
   <Valore di riferimento>
   Scostamento verticale della linea (2) compreso fra ±2,5 mm

2. Usare la modalità di manutenzione U071 per regolare la sincronizzazione.
   Front Head: Regola la sincronizzazione del bordo principale (superficie)
   Front Tail: Regola la sincronizzazione del bordo di uscita (superficie)
   CIS Head: Regola la sincronizzazione del bordo principale per scansione CIS.(DP-771/772)
   CIS Tail: Regola la sincronizzazione del bordo di uscita per scansione CIS.(DP-771/772)
   Back Head: Regola la sincronizzazione del bordo principale (lato posteriore)(DP-770(B))
   Back Tail: Regola la sincronizzazione del bordo di uscita (lato posteriore)(DP-770(B))

[确认前端定时调整]

1. 确认原稿（a）上的线（1）和复印样本上的线（2）之间的偏移值。如果偏移值超过标准值，则按照下列步骤进行调整。
   < 标准值 >
   线（2）的上下偏移值：±2.5mm 以内

2. 使用维修模式 U071 调整定时。
   Front Head：调整前端定时（正面）
   Front Tail：调整后端定时（正面）
   CIS Head：调整 CIS 读取时的前段对位 (DP-771/772)
   CIS Tail：调整 CIS 读取时的后端定时 (DP-771/772)
   Back Head：调整前端定时（反面）(DP-770(B))
   Back Tail：调整后端定时（反面）(DP-770(B))

[선단 타이밍확인]

1. 원고 (a) 선 (1) 과 샘플 카피 선 (2) 의 차이를 확인합니다 . 차이가 기준치 외의 경우 다음 순서로 조정을 합니다 .
   <기준치>
   선 (2) 의 상하차이:±2.5mm 이내

2. 메인터넌스 모드 U071 을 세트하고 조정을 합니다 .
   Front Head :선단 타이밍 (표면) 을 조정합니다 .
   Front Tail :후단 타이밍 (표면) 을 조정합니다 .
   CIS Head: CIS 스캔 시의 선단 타이밍을 조정합니다 .(DP-771/772)
   CIS Tail: CIS 스캔 시의 후단 타이밍을 조정합니다 .(DP-771/772)
   Back Head :선단 타이밍 (뒷면) 을 조정합니다 .(DP-770(B))
   Back Tail :후단 타이밍 (뒷면) 을 조정합니다 .(DP-770(B))

[先端タイミング確認]

1. 原稿 (a) の線 (1) とコピーサンプルの線 (2) のずれを確認する。ずれが基準値外の場合、次の手順で調整を行う。
   <基準値>
   線 (2) の上下ずれ:±2.5mm 以内

2. メンテナンスモード U071 をセットし、調整を行う。
   Front Head :先端タイミング（表面）を調整する
   Front Tail :後端タイミング（表面）を調整する
   CIS Head: CIS 読み込み時の先端タイミングを調整する (DP-771/772)
   CIS Tail: CIS 読み込み時の後端タイミングを調整する (DP-771/772)
   Back Head: 先端タイミング（裏面）を調整する (DP-770(B))
   Back Tail: 後端タイミング（裏面）を調整する (DP-770(B))

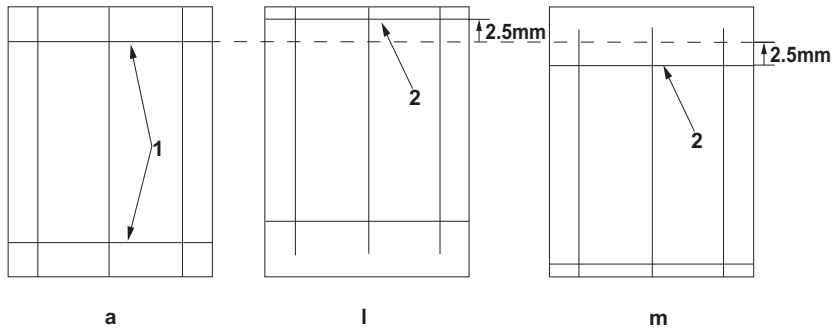

3. Adjust the values.
For the faster leading edge timing, copy examples (l): Decreases the value.
For the slower leading edge timing, copy examples (m): Increases the value.
Amount of change per step: 0.17 mm
4. Perform a test copy.
5. Repeat the steps 2 to 4 above until the gap of line (2) of copy example shows the reference value.
<Reference value>
Vertical gap of line (2): within ±2.5 mm

---

3. Régler les valeurs.
Pour les exemples de copie dont la synchronisation du bord avant est plus rapide (l) : diminuer la valeur.
Pour les exemples de copie dont la synchronisation du bord avant est plus lente (m) : augmenter la valeur.
Changement par graduation d'échelle : 0,17 mm
4. Effectuer une copie de test.
5. Répéter les étapes 2 à 4 jusqu'à ce que l'écart de la ligne (2) de l'exemple de copie indique la valeur de référence.
<Valeur de référence>
Écart vertical de la ligne (2) : ±2,5 mm

---

3. Ajuste los valores.
Para una sincronización más rápida de extremo guía, ejemplos de copia (l): disminuye el valor.
Para una sincronización más lenta de extremo guía, ejemplos de copia (m): aumenta el valor.
Magnitud del cambio por incremento: 0,17 mm
4. Haga una copia de prueba.
5. Repita los pasos 2 a 4 anteriores hasta que la separación de la línea (2) del ejemplo de copia presente el valor de referencia.
<Valor de referencia>
Separación vertical de la línea (2): dentro de ±2,5 mm

---

3. Die Werte einstellen.
Für den schnelleren Vorderkantentakt, Kopierbeispiel (l): Den Wert verringern.
Für den langsameren Vorderkantentakt, Kopierbeispiel (m): Den Wert erhöhen.
Änderung pro Schritt: 0,17 mm
4. Eine Testkopie erstellen.
5. Die Schritte 2 bis 4 wiederholen, bis der Abstand der Linie (2) des Kopierbeispiels den Bezugswert aufweist.
<Bezugswert>
Vertikaler Abstand der Linie (2): Innerhalb ±2,5 mm

---

3. Regolare i valori.
Per accelerare la fasatura del bordo di entrata, esempi di copia (l): riduce il valore.
Per rallentare la fasatura del bordo di entrata, esempi di copia (m): aumenta il valore.
Entità modifica per passo: 0,17 mm
4. Eseguire una copia di prova
5. Ripetere le operazioni sopra descritte da 2 a 4 fino a quando lo scostamento della linea (2) dell'esempio di copia riporterà i valori di riferimento.
<Valore di riferimento>
Scostamento verticale della linea (2) compreso fra ±2,5 mm

---

3. 调整设定值。
在前端定时偏快时　复印样本（l）：调低设定值
在前端定时偏慢时　复印样本（m）：调高设定值
设定值的一个调整单位变化量：0.17㎜
4. 进行测试复印。
5. 重复上述步骤 2 到 4，直至复印样本上的线（2）的偏移值达到标准值范围内。
〈标准值〉
线（2）的上下偏移值：±2.5㎜ 以内

---

3. 설정치를 조정합니다.
선단 타이밍이 빠른 경우 샘플 카피 (l):설정치를 내립니다.
선단 타이밍이 늦은 경우 샘플 카피 (m):설정치를 올립니다.
1 스텝당 변화량:0.17mm
4. 테스트 카피를 합니다.
5. 샘플 카피 선 (2) 의 차이가 기준치내가 될 때까지 2 ~ 4 를 반복합니다.
＜기준치＞
선 (2) 의 상하차이:±2.5mm 이내

---

3. 設定値を調整する。
先端タイミングが早い場合コピーサンプル (l):設定値を下げる。
先端タイミングが遅い場合コピーサンプル (m):設定値を上げる。
1 ステップ当たりの変化量:0.17㎜
4. テストコピーを行う。
5. コピーサンプルの線 (2) のずれが基準値内になるまで手順 2 ～ 4 を繰り返す。
＜基準値＞
線 (2) の上下ずれ:±2.5㎜ 以内

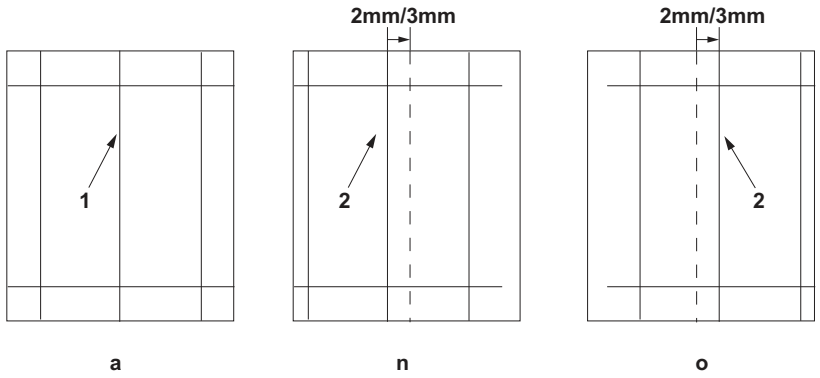

[Checking the center line]

1. Check the gap between center line (1) on original (a) and center line (2) of copy example. If the gap exceeds the reference value, adjust the gap according to the following procedure.
   <Reference value>
   Horizontal difference of center line (2) for the single copying: ±2.0 mm
   Horizontal difference of center line (2) for the duplex copying: ±3.0 mm
2. Use the maintenance mode U072 to adjust the timing.
   Front: Adjusts the center line (surface)
   Back: Adjusts the center line (rear side)
   CIS: Adjusts the CIS center line (DP-771/772)

[Vérification de la ligne médiane]

1. Vérifier l'écart entre l'axe (1) de l'original (a) et l'axe (2) de l'exemple de copie. Si l'écart excède la valeur de référence, le régler selon la procédure suivante.
   <Valeur de référence>
   Différence horizontale de l'axe (2) pour la copie recto : ±2,0 mm
   Différence horizontale de l'axe (2) pour la copie recto-verso : ±3,0 mm
2. Pour régler la ligne médiane, utiliser le mode entretien U072.
   Front: Permet de régler l'axe (surface)
   Back: Permet de régler l'axe (arrière)
   CIS: Permet de régler l'axe du CIS (DP-771/772)

[Verificación de la línea central]

1. Compruebe la separación entre la línea de centro (1) del original (a) y la línea de centro (2) del ejemplo de copia. Si la separación supera el valor de referencia, ajústela siguiendo este procedimiento.
   <Valor de referencia>
   Diferencia horizontal de la línea de centro (2) para el copiado por una cara: ±2,0 mm
   Diferencia horizontal de la línea de centro (2) para el copiado dúplex: ±3,0 mm
2. Para ajustar la línea central utilice el modo de mantenimiento U072.
   Front: ajusta la línea central (anverso)
   Back: ajusta la línea central (reverso)
   CIS: ajusta la línea central CIS (DP-771/772)

[Überprüfen der Mittellinie]

1. Den Abstand zwischen der Mittellinie (1) des Originals (a) und der Mittellinie (2) des Kopierbeispiels prüfen. Wenn der Abstand größer als der Bezugswert ist, den Abstand mit dem folgenden Verfahren einstellen.
   <Bezugswert>
   Horizontaler Unterschied der Mittellinie (2) für die Einzelkopie: ±2,0 mm
   Horizontaler Unterschied der Mittellinie (2) für die Duplexkopie: ±3,0 mm
2. Zum Einstellen der Mittellinie den Wartungsmodus U072 verwenden.
   Front: Zur Einstellung der Mittellinie (Oberfläche)
   Back: Zur Einstellung der Mittellinie (Rückseite)
   CIS: Zur Einstellung der CIS-Mittellinie (DP-771/772)

[Controllo della linea centrale]

1. Verificare lo scostamento fra la linea centrale (1) sull'originale (a) e la linea centrale (2) dell'esempio di copia. Se lo scostamento supera il valore di riferimento, regolare lo scostamento stesso seguendo questa procedura.
   <Valore di riferimento>
   Differenza orizzontale della linea centrale (2) per la copia singola: ±2,0 mm
   Differenza orizzontale della linea centrale (2) per la copia duplex: ±3,0 mm
2. Usare la modalità di manutenzione U072 per regolare la linea centrale.
   Front: Regola la linea centrale (superficie)
   Back: Regola la linea centrale (lato posteriore)
   CIS: Regola la linea centrale CIS (DP-771/772)

[确认中心线]

1. 确认原稿（a）中心线（1）和复印样本中心线（2）之间的偏移值。如果偏移值超过标准值，则按照下列步骤进行调整。
   〈 标准值 〉 单面复印时，中心线（2）的左右偏移值 ：±2.0㎜ 以内
   双面复印时，中心线（2）的左右偏移值 ：±3.0㎜ 以内
2. 使用维修模式 U072 调整中心线。
   Front ：中心位置（正面）的调整
   Back ：中心位置（反面）的调整
   CIS: CIS 的中心位置的调整 (DP-771/772)

[센터 라인 확인]

1. 원고 (a) 센터라인 (1) 과 샘플 카피 센터라인 (2) 의 차이를 확인합니다 . 차이가 기준치 외의 경우 다음 순서로 조정합니다 .
   < 기준치 > 단면의 경우 센터라인 (2) 의 좌우차이 : ±2.0mm 이내
   양면의 경우 센터라인 (2) 의 좌우차이 : ±3.0mm 이내
2. 메인터넌스 모드 U072 을 세트하고 조정을 합니다 .
   Front:센터 위치 (표면) 의 조정
   Back:센터 위치 (뒷면) 의 조정
   CIS:CIS 의 센터 위치조정 ((DP-771/772)

[センターライン確認]

1. 原稿 (a) の中心線 (1) とコピーサンプルの中心線 (2) のずれを確認する。ずれが基準値外の場合、次の手順で調整を行う。
   ＜基準値＞片面の場合、中心線 (2) の左右ずれ:±2.0㎜ 以内
   両面の場合、中心線 (2) の左右ずれ:±3.0㎜ 以内
2. メンテナンスモード U072 をセットし、調整を行う。
   Front:センター位置(表面)の調整
   Back:センター位置(裏面)の調整
   CIS:CIS のセンター位置の調整 (DP-771/772)

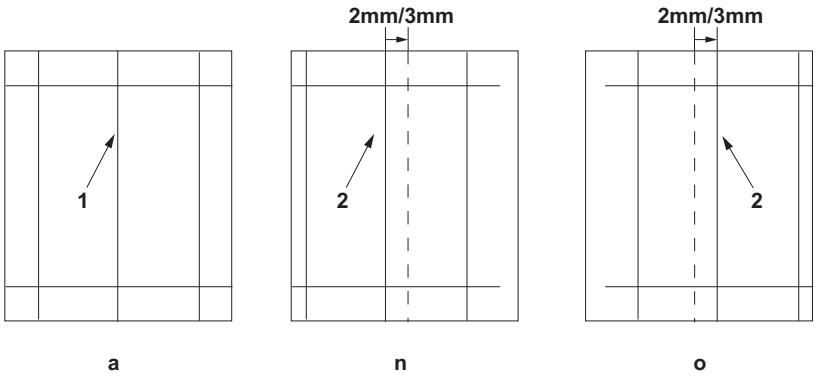

3. Adjust the values.
If the center moves more front, copy example (n): Increases the value.
If the center moves inner, copy sample (o): Decreases the value.
Amount of change per step: 0.085 mm
4. Perform a test copy.
5. Repeat the steps 2 to 4 above until the gap of line (2) of copy example shows the reference value.
<Reference value>
Horizontal difference of center line (2) for the single copying: ±2.0 mm
Horizontal difference of center line (2) for the duplex copying: ±3.0 mm

---

3. Régler les valeurs.
Pour l'exemple de copie (n) dont l'axe se déplace davantage vers l'avant : augmenter la valeur.
Pour l'exemple de copie (o) dont l'axe se déplace vers l'intérieur : diminuer la valeur.
Changement par graduation d'échelle : 0,085 mm
4. Effectuer une copie de test.
5. Répéter les étapes 2 à 4 jusqu'à ce que l'écart de la ligne (2) de l'exemple de copie indique la valeur de référence.
<Valeur de référence>
Différence horizontale de l'axe (2) pour la copie recto : ±2,0 mm
Différence horizontale de l'axe (2) pour la copie recto-verso : ±3,0 mm

---

3. Ajuste los valores.
Si el centro se desplaza más hacia el frente, ejemplo de copia (n): aumenta el valor.
Si el centro se desplaza hacia dentro, ejemplo de copia (0): disminuye el valor.
Magnitud del cambio por incremento: 0,085 mm
4. Haga una copia de prueba.
5. Repita los pasos 2 a 4 anteriores hasta que la separación de la línea (2) del ejemplo de copia presente el valor de referencia.
<Valor de referencia>
Diferencia horizontal de la línea de centro (2) para el copiado por una cara: ±2,0 mm
Diferencia horizontal de la línea de centro (2) para el copiado dúplex: ±3,0 mm

---

3. Die Werte einstellen.
Wenn die Mitte nach vorne verlagert ist, Kopierbeispiel (n): Den Wert erhöhen.
Wenn die Mitte nach innen verlagert ist, Kopierbeispiel (o): Den Wert verringern.
Änderung pro Schritt: 0,085 mm
4. Eine Testkopie erstellen.
5. Die Schritte 2 bis 4 wiederholen, bis der Abstand der Linie (2) des Kopierbeispiels den Bezugswert aufweist.
<Bezugswert>
Horizontaler Unterschied der Mittellinie (2) für die Einzelkopie: ±2,0 mm
Horizontaler Unterschied der Mittellinie (2) für die Duplexkopie: ±3,0 mm

---

3. Regolare i valori.
Se il centro si sposta più avanti, esempio di copia (n): aumenta il valore.
Se il centro si sposta verso l'interno, esempio di copia (o): riduce il valore.
Entità modifica per passo: 0,085 mm
4. Eseguire una copia di prova
5. Ripetere le operazioni sopra descritte da 2 a 4 fino a quando lo scostamento della linea (2) dell'esempio di copia riporterà i valori di riferimento.
<Valore di riferimento>
Differenza orizzontale della linea centrale (2) per la copia singola: ±2,0 mm
Differenza orizzontale della linea centrale (2) per la copia duplex: ±3,0 mm

---

3. 调整设定值。
当中心向前偏移时　复印样本（n）：调高设定值
当中心向内偏移时　复印样本（o）：调低设定值
设定值的一个调整单位变化量：0.085㎜
4. 进行测试复印。
5. 重复上述步骤 2 到 4，直至复印样本上的线（2）的偏移值达到标准值范围内。
〈标准值〉
单面复印时，中心线（2）的左右偏移值：±2.0㎜ 以内
双面复印时，中心线（2）的左右偏移值：±3.0㎜ 以内

---

3. 설정치를 조정합니다 .
센터가 바로 앞으로 틀려 있는 경우 샘플 카피 (n):설정치를 높입니다 .
센터가 안으로 틀려 있는 경우 샘플 카피 (o) : 설정치를 내립니다 .
1 스텝당 변화량:0.085mm
4. 테스트 카피를 합니다 .
5. 샘플 카피 센터라인 (2) 차이가 기준치 내가 될 때까지 순서 2 ~ 4 를 반복합니다 .
＜기준치＞
단면의 경우 센터라인 (2) 의 좌우차이:±2.0mm 이내
양면의 경우 센터라인 (2) 의 좌우차이:±3.0mm 이내

---

3. 設定値を調整する。
センターが手前にずれている場合コピーサンプル (n):設定値を上げる。
センターが奥にずれている場合コピーサンプル (o) 設定値を下げる。
1 ステップ当たりの変化量:0.085㎜
4. テストコピーを行う。
5. コピーサンプルの中心線 (2) ずれが基準値内になるまで手順 2 ～ 4 を繰り返す。
＜基準値＞
片面の場合、中心線 (2) の左右ずれ:±2.0㎜ 以内
両面の場合、中心線 (2) の左右ずれ:±3.0㎜ 以内

MEMO

MEMO

303NW5673001

2013. 7
303NW56730-01

INSTALLATION GUIDE FOR PAPER FEEDER

INSTALLATION GUIDE

GUIDE D’INSTALLATION

GUÍA DE INSTALACION

INSTALLATIONSANLEITUNG

GUIDA ALL’INSTALLAZIONE

安装手册

설치안내서

設置手順書

PF-730(B)

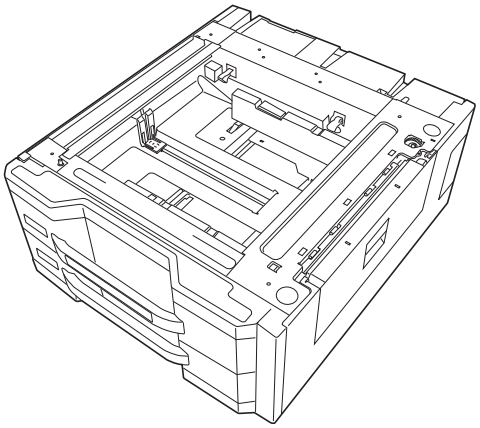

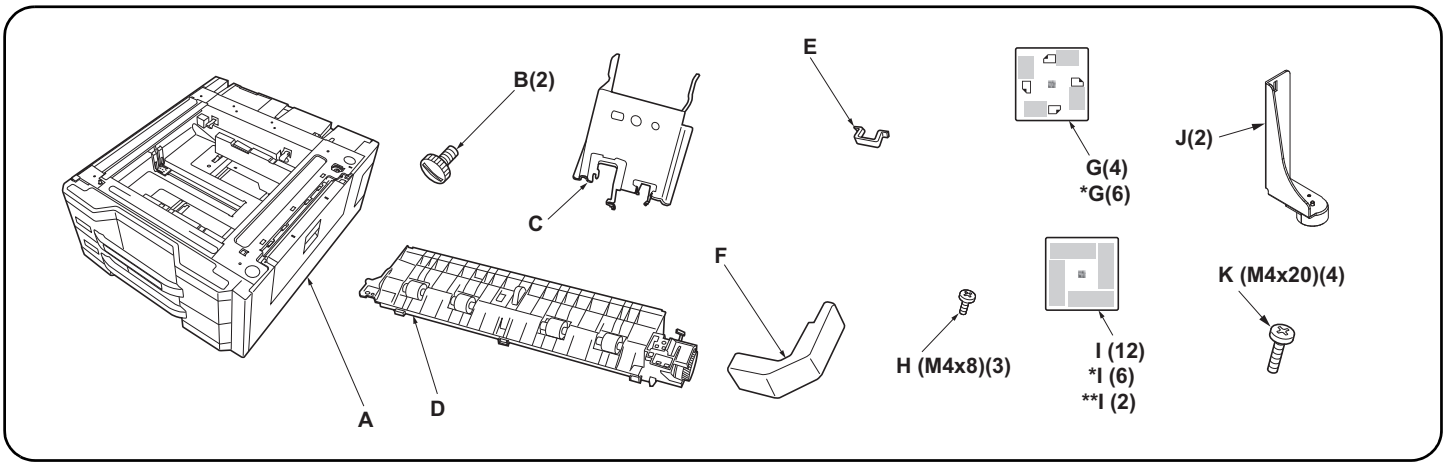

English

Supplied parts

A. Paper feeder 1
B. Pin 2
C. Retainer 1
D. Intermediate paper conveying unit 1
E. Clamp 1
F. Wire cover 1
G. Paper size plate 4
H. S Tite screw M4 × 8 3
***I.** Media type plate(120V model only) 6
****I.** Media type plate(110V model only) 2
I. Media type plate (except for above models) 12
J. Stopper 2
K. S Tite screws M4 × 20 4

Be sure to remove any tape and/or cushioning materials from the parts supplied.

Français

Pièces fournies

A. Chargeur de papier 1
B. Broche 2
C. Élément de retenue 1
D. Unité de transport du papier intermédiaire 1
E. Collier 1
F. Couvercle de câble 1
G. Plaquette du format de papier 4
H. Vis S Tite M4 × 8 3
I. Plaquette du type de support 12
J. Butée 2
K. Vis S Tite M4 × 20 4

Veillez à retirer les morceaux de bande adhésive et/ou les matériaux de rembourrage des pièces fournies.

Español

Partes suministradas

A. Depósito de papel 1
B. Clavija 2
C. Retén 1
D. Unidad de transporte de papel intermedia. 1
E. Sujetador 1
F. Cubierta para el cable 1
G. Placa de tamaño de papel 4
H. Tornillo S Tite M4 × 8 3
I. Placa de tipo de medio 12
J. Tope 2
K. Tornillos S Tite M4 × 20 4

Asegúrese de despegar todas las cintas y/o material amortiguador de las partes suministradas.

Deutsch

Enthaltene Teile

A. Papiereinzug 1
B. Stift 2
C. Halterung 1
D. Eingesetzte Papierfördereinheit 1
E. Klemme 1
F. Kabelabdeckung 1
G. Papierformatkarte 4
H. S-Tite-Schraube M4 × 8 3
I. Medientypkarte 12
J. Anschlag 2
K. S-Tite-Schrauben M4 × 20 4

Stellen Sie sicher, dass sämtliche Klebebänder und/oder Polstermaterial von den gelieferten Teilen entfernt wurden.

Italiano

Parti fornite

A. Unità di alimentazione della carta 1
B. Perno 2
C. Fermo 1
D. Unità intermediale di trasporto carta 1
E. Morsetto 1
F. Coperchio cavi 1
G. Piastra formato carta 4
H. Vite S Tite M4 × 8 3
I. Piastra tipo carta 12
J. Fermo 2
K. Vite S Tite M4 × 20 4

Rimuovere tutti i nastri adesivi e/o i materiali di protezione dalle parti fornite.

简体中文

附属品

A. 供纸工作台 1
B. 固定插销 2
C. 安装板 1
D. 中间搬运单元 1
E. 束线夹 1
F. 电线盖板 1
*G. 纸张尺寸标识片 6
H. 紧固型S 螺丝 M4×8 3
**I. 纸张种类标识片 2
J. 限位器 2
K. 紧固型 S 螺丝 M4×20 4

如果附属品上带有固定胶带，缓冲材料时务必揭下。

한국어

동봉품

A. 급지대 1
B. 핀 2
C. 부착판 1
D. 중간반송유니트 1
E. 크램프 1
F. 전선커버 1
G. 용지크기 플레이트 4
H. 나사 M4×8 S 타이트 3
**I. 용지종류 플레이트 2
J. 전도방지쇠 2
K. 나사 M4×20 S 타이트 4

동봉품에 고정 테이프 , 완충재가 붙어 있는 경우에는 반드시 제거할 것 .

日本語

同梱品

A. ペーパーフィーダー 1
B. ピン 2
C. 取付板 1
D. 中間搬送ユニット 1
E. クランプ 1
F. 電線カバー 1
G. 用紙サイズプレート 4
H. ビス M4×8 S タイト 3
**I. 用紙種類プレート 2
J. 転倒防止金具 2
K. ビス M4×20 S タイト 4

同梱品に固定テープ、緩衝材が付いている場合は必ず取り外すこと。

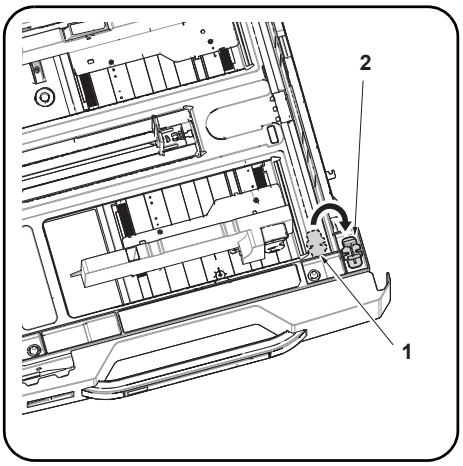

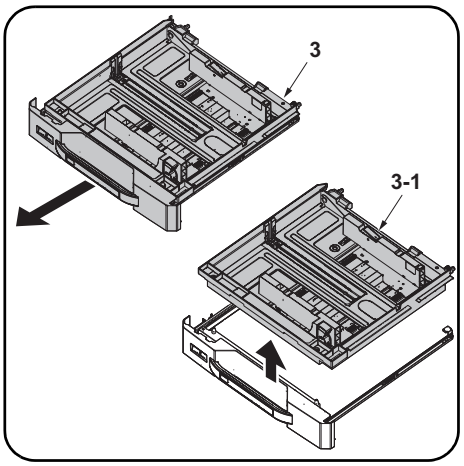

Procedure
Before starting installation, be sure to turn the main power switch of the machine off, and unplug the power plug from the wall outlet.

1. Pull each cassette out from the paper feeder (A). Remove the lift plate stopper (1) from each cassette and attach it to the storage location (2).
2. Gently close each cassette.

3. Pull out the lower paper cassette (3) from the machine.
4. Remove the paper cassette (3-1).

Procédure
Avant de commencer l'installation, s'assurer de mettre la machine hors tension et de débrancher la fiche d'alimentation de la prise murale.

1. Sortez chaque magasin du chargeur de papier (A). Retirez la butée de la plaque de levage (1) de chaque magasin et fixez-la dans l'emplacement de stockage (2).
2. Refermer progressivement chaque tiroir.

3. Sortez le magasin de papier inférieur (3) de la machine.
4. Retirez le magasin de papier (3-1).

Procedimiento
Antes de iniciar la instalación, asegúrese de apagar el interruptor de encendido de la máquina y desenchufar el cable de alimentación de la toma de pared.

1. Saque cada uno de los depósitos del depósito de papel (A). Quite el tope de placa de elevación (1) de cada depósito y póngalo en el espacio reservado para guardarlo (2).
2. Cierre suavemente cada bandeja.

3. Extraiga el depósito inferior (3) de la máquina.
4. Quite el depósito de papel (3-1).

Verfahren
Bevor Sie mit der Installation beginnen überzeugen Sie sich, dass der Netzschalter des Geräts ausgeschaltet und das Stromkabel aus der Steckdose gezogen ist.

1. Ziehen Sie jede Kassette aus dem Papiereinzug (A) heraus. Entfernen Sie die Verriegelung des Papierlifts (1) aus jeder Kassette und setzen Sie die Verriegelung in die Parkposition (2) ein.
2. Alle Kassetten sachte schließen.

3. Ziehen Sie die untere Kassette (3) aus dem Gerät heraus.
4. Nehmen Sie die Papierkassette (3-1) heraus.

Procedura
Prima di iniziare l'installazione, spegnere la macchina e scollegare la spina dalla presa di corrente.

1. Estrarre ciascun cassetto dall'unità di alimentazione carta (A). Rimuovere il fermo della piastra di sollevamento (1) da ogni cassetto e fissarlo sulla posizione a riposo (2).
2. Chiudere delicatamente ciascun cassetto.

3. Estrarre il cassetto carta inferiore (3) dalla macchina.
4. Rimuovere il cassetto carta (3-1).

安装步骤
安装前务必关闭机器的主电源开关，并从墙壁插座拔下电源插头。

1. 拉出供纸工作台 (A) 的各个供纸盒，拆下各 1 个升降板限位器 (1)，并安装在保管场所 (2) 上。
2. 轻轻地推入各供纸盒。

3. 拉出机器的下部供纸盒 (3)。
4. 取下纸盒 (3-1)。

설치순서
설치를 시작하기 전에 반드시 본체의 주 전원 스위치를 끄고 벽 콘센트에서 전원 플러그를 분리하십시오 .

1. 급지대 (A) 의 각 카세트를 빼냅니다 . 리프트판 스토퍼 (1) 각 1 개를 빼내 보관장소 (2) 에 부착합니다 .
2. 각 카세트를 조용히 밀어 넣습니다 .

3. 본체의 하단 용지 카세트 (3) 를 빼냅니다 .
4. 용지 카세트 (3-1) 를 제거합니다 .

取付手順
必ず機械本体の主電源スイッチを OFF にし、機械本体の電源プラグを抜いてから作業すること。

1. ペーパーフィーダー(A) の各カセットを引き出す。リフト板ストッパー(1) 各 1 個を外して保管場所 (2) に取り付ける。
2. 各カセットを静かに押し込む。

3. 機械本体の下段カセット (3) を引き出す。
4. カセット (3-1) を取り外す。

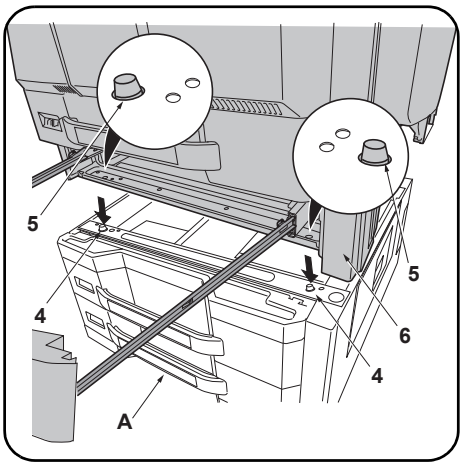

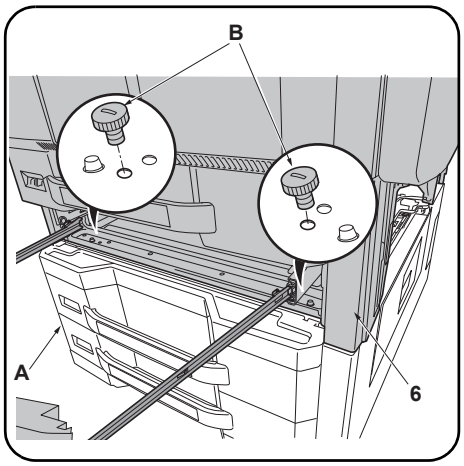

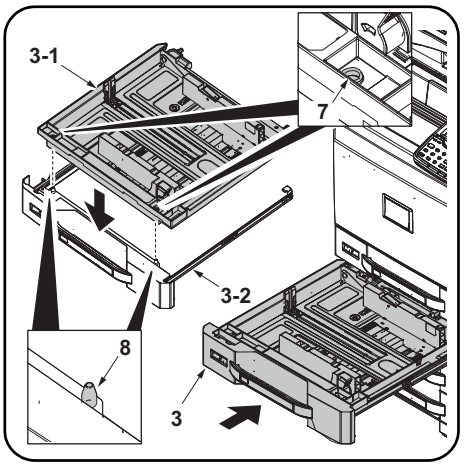

5. Place the machine (6) on the paper feeder (A) so that the pins (4) at the front left and front right of the paper feeder (A) are aligned with the holes (5) in the base of the machine.

6. Secure the machine (6) to the paper feeder (A) with the 2 pins (B).

7. Align the holes (7) of the lower cassette (3-1) for the machine with the pins (8) in the cassette slider (3-2). Put the paper cassette (3-1).

8. Push the lower paper cassette (3) in fully.

---

5. Monter la machine (6) sur le chargeur de papier (A) de sorte que les broches (4) à l'avant gauche et à l'avant droit du chargeur de papier (A) soient alignés avec les trous (5) dans la base du machine.

6. Fixer la machine (6) au chargeur de papier (A) avec les 2 broches (B).

7. Alignez les trous (7) du magasin inférieur (3-1) pour la machine avec les ergots (8) dans le tiroir du magasin (3-2). Placez le magasin de papier (3-1).

8. Enfoncez à fond le magasin de papier inférieur (3).

---

5. Coloque la máquina (6) sobre el depósito de papel (A) de forma que los pasadores (4) en los lados frontales izquierdo y derecho del depósito de papel (A) estén alineados con los orificios (5) de la base de la máquina.

6. Fije la máquina (6) al depósito de papel (A) con los dos pasadores (B).

7. Alinee los orificios (7) del depósito inferior (3-1) de la máquina con los pasadores (8) del deslizador del depósito (3-2). Coloque el depósito de papel (3-1).

8. Ejerza presión sobre el depósito de papel inferior (3) hasta introducirlo por completo.

---

5. Setzen Sie das Gerät (6) so auf den Papiereinzug (A), dass die Stifte (4) vorne links und vorne rechts am Papiereinzug (A) auf die Öffnungen (5) im Boden des Geräts ausgerichtet sind.

6. Sichern Sie das Gerät (6) mit den 2 Stiften (B) am Papiereinzug (A).

7. Richten Sie die Löcher (7) der Kassette (3-1) des Geräts mit den Stiften (8) im Kassettenanschlag (3-2) aus. Setzen Sie die Papierkassette (3-1) wieder ein.

8. Schieben Sie die Papierkassette (3) bis zum Anschlag ein.

---

5. Posizionare la macchina (6) sull'alimentatore carta (A) in modo che i perni (4) sul lato destro e sinistro anteriore dell'alimentatore carta (A) siano allineati con i fori (5) presenti sulla base della macchina..

6. Fissare la macchina (6) sull'alimentatore carta (A) con i 2 perni (B).

7. Allineare i fori (7) del cassetto inferiore (3-1) per la macchina con perni (8) della guida cassetto (3-2). Inserire il cassetto carta (3-1).

8. Spingere il cassetto carta inferiore (3) fino in fondo.

---

5. 供纸工作台 (A) 的左右前面的各插销 (4) 分别对准机器 主机底面的孔 (5) 后，将机器 (6) 放在供纸工作台 (A) 上。

6. 用 2 个固定插销 (B) 将机器 主机 (6) 固定在供纸工作台 (A) 上。

7. 将机器下部供纸盒 (3-1) 的孔 (7) 和供纸盒导轨 (3-2) 的插销 (8) 对齐。放置纸盒 (3-1)。

8. 完全推入下部供纸盒 (3)。

---

5. 급지대 (A) 의 전면 좌측과 전면 우측에 있는 각 핀 (4) 이 본체의 바닥면에 있는 구멍 (5) 에 맞도록 본체 (6) 를 급지대 (A) 위에 놓습니다 .

6. 핀 (B) 2 개로 본체 (6) 를 급지대 (A) 에 고정합니다 .

7. 본체의 하단 용지 카세트 (3-1) 의 구멍 (7) 과 카세트 슬라이더 (3-2) 의 핀 (8) 을 맞춥니다 . 용지 카세트 (3-1) 를 배치합니다 .

8. 하단 용지 카세트 (3) 를 완전히 밀어 넣습니다 .

---

5. ペーパーフィーダー(A) の左右前方の各ピン (4) と機械本体のベースの穴 (5) が合うように、ペーパーフィーダー(A) に機械本体 (6) を載せる。

6. ピン (B)2 本で 機械本体 (6) をペーパーフィーダー(A) に固定する。

7. 機械本体の下段カセット (3-1) の穴 (7) とカセットスライダー(3-2) のピン (8) を合わせる。カセット (3-1) を置く。

8. 下段カセット (3) を奥まで押し込む。

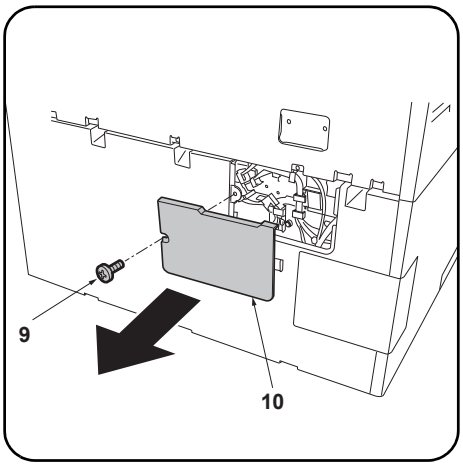

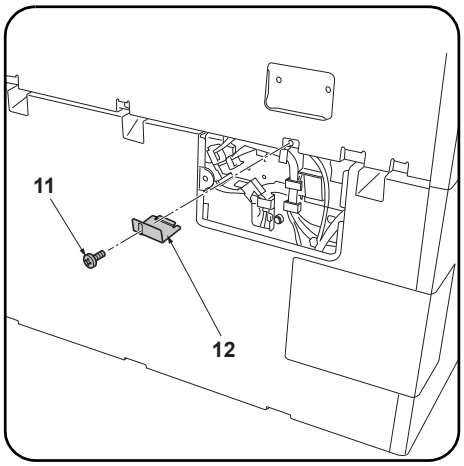

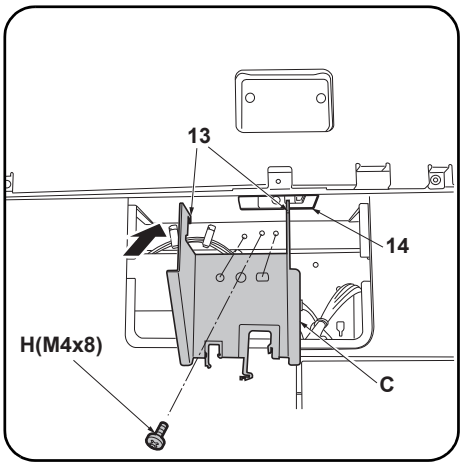

9. Remove the screw (9) in the rear of the paper feeder and remove the cover (10).

10. Remove the screw (11) to remove the metal plate (12).

11. Fit the hook (13) on the mounting plate (C) into the opening (14) and then align the 2 positioning projections.

12. Secure the mounting plate (C) with the S Tite screw M4 × 8 (H).

---

9. Déposer la vis (9) à l'arrière du chargeur de papier et déposer le couvercle (10).

10. Déposer la vis (11) pour enlever la plaque métallique (12).

11. Insérer le crochet (13) du plateau de montage (C) dans l'ouverture (14) et aligner les 2 saillies de positionnement.

12. Fixer le plateau de montage (C) avec la vis S Tite M4 × 8 (H).

---

9. Quite el tornillo (9) del lado trasero del depósito de papel y quite la cubierta (10).

10. Quite el tornillo (11) para desmontar la placa de metal (12).

11. Coloque el gancho (13) de la placa de montaje (C) en la abertura (14) y, después, alinee los 2 resaltos de posición.

12. Asegure la placa de montaje (C) con el tornillo S Tite M4 x 8 (H).

---

9. Die Schraube (9) an der Rückseite des Papiereinzugs entfernen und die Abdeckung (10) abnehmen.

10. Die Schraube (11) herausdrehen, um die Metallplatte (12) abzunehmen.

11. Den Haken (13) auf der Montageplatte (C) in die Öffnung (14) einpassen und dann die 2 Positionierungsnasen ausrichten.

12. Die Montageplatte (C) mit der S-Tite-Schraube M4 x 8 verwenden (H) befestigen.

---

9. Rimuovere la vite (9) nel retro dell'unità di alimentazione della carta e quindi rimuovere il coperchio (10).

10. Rimuovere la vite (11), per rimuovere la piastra di metallo (12).

11. Inserire il gancio (13) sulla piastra di montaggio (C) nell'apertura (14) e quindi allineare le 2 sporgenze di posizionamento.

12. Fissare la piastra di montaggio (C) con la vite S Tite M4 × 8 (H).

---

9. 拆除供纸工作台后部的 1 颗螺丝 (9)，拆下盖板 (10)。

10. 拆除 1 颗螺丝 (11)，拆下金属件 (12)。

11. 将安装板 (C) 的挂钩 (13) 挂在开口部 (14) 上，并与定位用的 2 处突出部对齐。

12. 使用 1 颗紧固型 S 螺丝 M4×8 (H) 来固定安装板 (C)。

---

9. 급지대 후면의 뒤쪽 나사 (9) 1 개를 제거하고 커버 (10) 를 떼어 냅니다 .

10. 나사 (11) 1 개를 제거하고 쇠 (12) 를 제거합니다 .

11. 부착판 (C) 의 후크 (13) 를 개구부 (14) 에 걸고 위치고정 돌기 2 곳을 맞춥니다 .

12. 나사 M4×8 S 타이트 (H) 1 개로 부착판 (C) 을 고정합니다 .

---

9. ペーパーフィーダー後側のビス (9)1 本を外し、カバー(10) を取り外す。

10. ビス (11)1 本を外し、金具 (12) を取り外す。

11. 取付板 (C) のフック (13) を開口部 (14) に引っ掛けてから、位置決めの突起 2 箇所を合わせる。

12. ビス M4×8 S タイト (H)1 本で取付板 (C) を固定する。

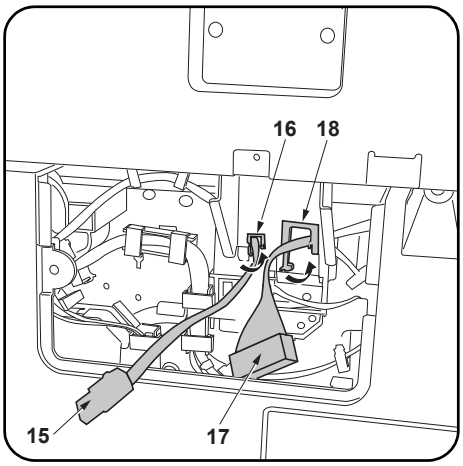

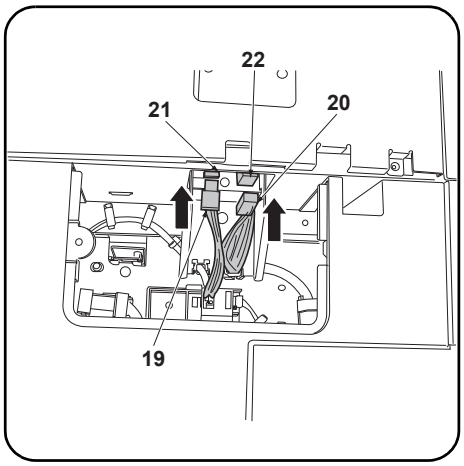

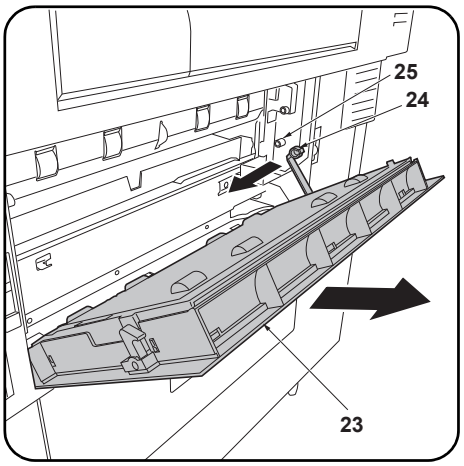

13. Pass the power cord (15) through the edging (small) (16) and the signal cable (17) through the edging (large) (18) and then close the edging

14. Connect the power cord (19) and the signal cable (20) to connectors (21) (22) respectively on the machine.

15. Replace the cover (10) using the screw (9) removed in step 9.

16. Open the lower right cover (23) on the machine.
Remove the strap (24) from the shaft (25) and remove lower right cover (23).

---

13. Faire passer le cordon d'alimentation (15) dans le (petit) passage (16) et le câble du signal (17) dans le (grand) passage (18) puis fermer le passage.

14. Raccorder respectivement le cordon d'alimentation (19) et le câble de signal (20) aux connecteurs (21) (22) de la machine.

15. Reposer le couvercle (10) à l'aide de la vis (9) déposée à l'étape 9.

16. Ouvrir le capot inférieur droit (23) de la machine.
Déposer la courroie (24) de l'arbre (25) et déposer le couvercle inférieur droit (23).

---

13. Pase el cable de alimentación (15) a través de la pestaña (pequeña) (16) y el cable de señales (17) a través de la pestaña (grande) (18) y, después, cierre la pestaña.

14. Conecte el cable de alimentación (19) y el cable de señal (20) a los conectores (21) (22) respectivamente de la máquina.

15. Vuelva a colocar la cubierta (10) usando el tornillo (9) quitado en el paso 9.

16. Abra la cubierta derecha inferior (23) de la máquina.
Quite la correa (24) del eje (25) y quite la cubierta frontal inferior (23).

---

13. Das Netzkabel (15) durch den Kantenschutz (klein) (16) und das Signalkabel (17) durch den Kantenschutz (groß) (18) führen und dann den Kantenschutz schließen.

14. Schließen Sie das Netzkabel (19) und das Signalkabel (20) an den entsprechenden Steckverbindern (21) (22) des Geräts an.

15. Die Abdeckung (10) mittels der in Schritt 9 entfernten Schraube (9) wieder anbringen.

16. Öffnen Sie die untere rechte Abdeckung (23) des Geräts.
Den Riemen (24) von der Welle (25) abnehmen und dann die untere rechte Abdeckung (23) abnehmen.

---

13. Passare il cavo di alimentazione (15) attraverso il bordo (piccolo) (16) e il cavo del segnale (17) attraverso il bordo (grande) (18), e quindi chiudere il bordo.

14. Collegare il cavo di alimentazione (19) e il cavo del segnale (20) ai connettori della macchina (21) e (22), rispettivamente.

15. Ricollocare il coperchio (10) utilizzando la vite (9) rimossa nel passo 9.

16. Aprire il pannello destro inferiore (23) sulla macchina.
Rimuovere la cinghietta (24) dall'asta (25) e quindi rimuovere il pannello destro inferiore (23).

---

13. 将 AC 电线 (15) 从束线孔（小）(16)，信号线 (17) 从束线孔（大）(18) 中分别穿过，关闭束线孔。

14. 将 AC 电线 (19) 以及信号线 (20) 分别与主机的接插件 (21)、(22) 连接。

15. 使用在步骤 9 中拆除的 1 颗螺丝 (9) 按原样安装盖板 (10)。

16. 打开机器的右下部盖板 (23)。
将带子 (24) 从轴 (25) 上拆除，拆下右下部盖板 (23)。

---

13. AC 전선 (15) 을 에징 (소) (16) 에 , 신호선 (17) 을 에징 (대) (18) 에 각각 지나가게 하고 에징을 닫습니다 .

14. 전원 코드 (19) 및 신호 케이블 (20) 을 본체 커넥터 (21), (22) 에 각각 연결합니다 .

15. 순서 9 에서 제거한 나사 (9) 1 개로 커버 (10) 를 원래대로 부착합니다 .

16. 본체의 오른쪽 하단 커버 (23) 를 엽니다 .
스트라프 (24) 를 축 (25) 에서 떼어내 오른쪽 아래 커버 (23) 를 제거합니다 .

---

13. AC 電線 (15) をエッジング(小)(16) に、信号線 (17) をエッジング(大)(18) にそれぞれ通し、エッジングを閉じる。

14. AC 電線 (19) および信号線 (20) を本体のコネクター(21)、(22) にそれぞれ接続する。

15. 手順 9 で取り外したビス (9)1 本でカバー (10) を元通りに取り付ける。

16. 機械本体の右下カバー(23) を開く。
ストラップ (24) を軸 (25) から外し、右下カバー(23) を取り外す。

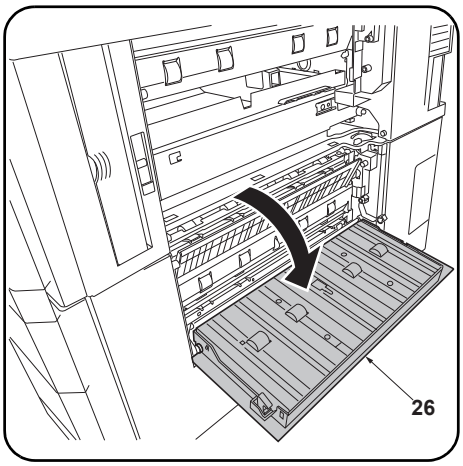

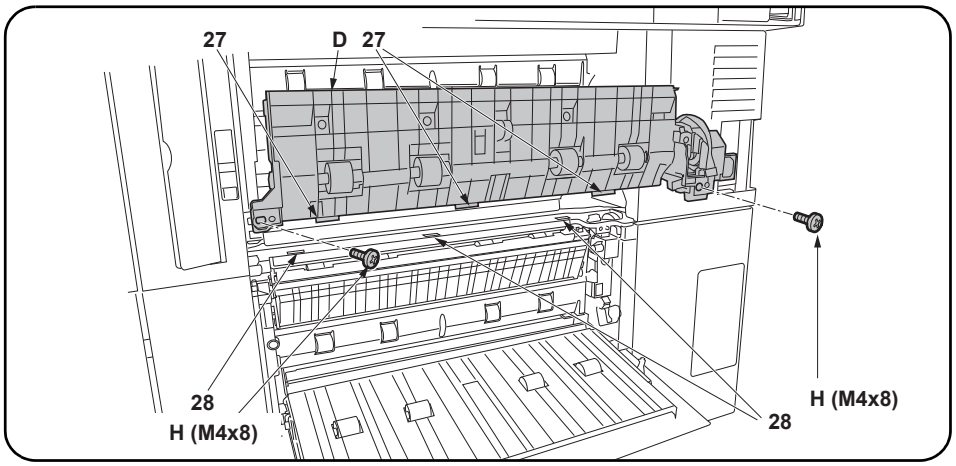

17. Open the paper feeder right cover (26).

18. Fit the 3 hooks (27) on the intermediate paper conveying unit (D) into the 3 holes (28) in the guide.

19. Secure the intermediate paper conveying unit (D) with the 2 S Tite screw M4 × 8 (H).

NOTICE

Be sure to use S Tite screw M4 × 8.

Using longer screws, such as S Tite screws M4 × 20, may damage wires.

---

17. Ouvrir le couvercle droit du chargeur de papier (26).

18. Insérer les 3 crochets (27) de l'unité de transport du papier intermédiaire (D) dans les 3 trous (28) du guide.

19. Fixer l'unite de transport du papier intermediaire (D) a l'aide des 2 Vis S Tite M4 × 8 (H).

REMARQUE

S'assurer d'utiliser la vis S Tite M4 × 8.

L'utilisation de vis plus longues, comme les vis S Tite M4 × 20, peut endommager les fils.

---

17. Abra la cubierta derecha del depósito de papel (26).

18. Coloque los 3 ganchos (27) de la unidad de transporte de papel intermedia (D) en los 3 orificios (28) de la guía.

19. Asegure la unidad de transporte de papel intermedia (D) con los 2 Tornillo S Tite M4 × 8 (H).

AVISO

Asegúrese de usar tornillos S Tite M4 x 8.

El uso de tornillos más largos, como tornillos S Tite M4 x 20, puede dañar los cables.

---

17. Die rechte Abdeckung (26) des Papiereinzugs öffnen.

18. Die 3 Haken (27) an der eingesetzten Papierfördereinheit (D) in die 3 Öffnungen (28) in der Führung einpassen.

19. Die eingesetzte Papierfordereinheit (D) mit den 2 S-Tite-Schraube M4 × 8 (H) sichern.

ANMERKUNG

Stellen Sie sicher, dass Sie die S-Tite-Schraube M4 x 8 verwenden.

Die Verwendung von längeren Schrauben als den S-Tite-Schrauben M4 x 20 kann Kabel beschädigen.

---

17. Aprire il pannello destro (26) dell'unità di alimentazione della carta.

18. Inserire i 3 ganci (27) sull'unità intermediale di trasporto carta (D) nei 3 fori (28) nella guida.

19. Fissare l'unita intermediale di trasporto carta (D) con le 2 Vite S Tite M4 × 8 (H).

AVVISO

Utilizzare solo la vite S Tite M4 × 8.

Se si utilizzano viti più lunghe, come le viti S Tite M4 × 20, si possono danneggiare i fili.

---

17. 打开供纸工作台的右部盖板 (26)。

18. 将中间搬运单元 (D) 的 3 个挂钩 (27) 嵌入导向板的 3 个孔 (28) 中。

19. 使用 2 颗紧固型 S 螺丝 M4×8(H) 来固定中间搬运单元 (D)。

注意

必须使用紧固型 S 螺丝 M4×8。

如使用长螺丝 (紧固型 S 螺丝 M4×20)，可能会使电线受到损伤。

---

17. 급지대 오른쪽 커버 (26) 를 엽니다 .

18. 중간반송유니트 (D) 의 후크 (27) 3 개를 가이드 구멍 (28) 3 곳에 꽂습니다 .

19. 나사 M4×8 S 타이트 (H) 2 개로 중간반송유니트 (D) 를 고정합니다 .

주의

반드시 나사 M4×8 S 타이트를 사용하십시오 .

더 긴 나사 (예 : 나사 M4×20 S 타이트) 를 사용할 경우 와이어가 손상될 수 있습니다 .

---

17. ペーパーフィーダーの右カバー(26) を開く。

18. 中間搬送ユニット (D) のフック (27)3 個をガイドの穴 (28)3 カ所にはめ込む。

19. ビス M4×8 S タイト (H)2 本で中間搬送ユニット (D) を固定する。

注意

必ずビス M4×8 S タイトを使用すること。

長いビス (M4×20 S タイト) を使用すると電線を傷付けることがあります。

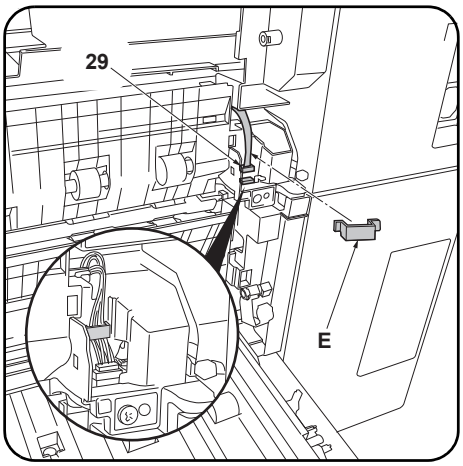

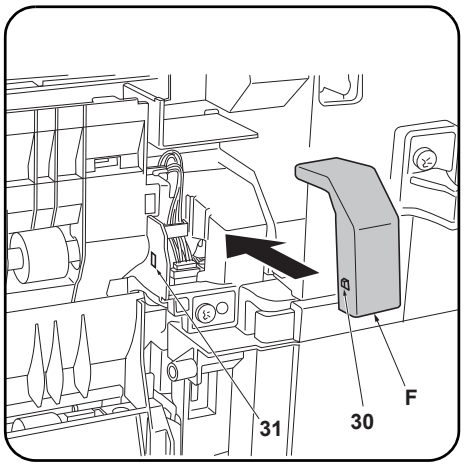

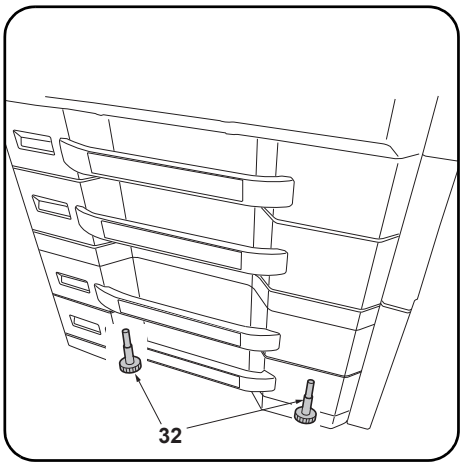

20. Connect the intermediate paper conveying unit connector (29).
21. Attach the clamp (E) and secure the connector wire.

22. Insert the projection (30) on the wire cover (F) into the hole (31) in the paper feeder and install the wire cover (F).
23. Close the paper feeder right cover (26) and replace the lower right cover (23) on the machine.

24. Turn the adjusters on each corner (32) until they reach the floor and then secure the paper feeder.

---

20. Raccorder le connecteur (29) de l'unité de transport du papier intermédiaire.
21. Monter le collier (E) et fixer le câble du connecteur.

22. Insérer la saillie (30) du couvercle du câble (F) dans le trou (31) du chargeur de papier et reposer le couvercle du câble (F).
23. Fermer le couvercle droit du chargeur de papier (26) et reposer le capot inférieur droit (23) sur la machine.

24. Faire tourner les dispositifs de réglage de chacun des coins (32) jusqu'à ce qu'ils touchent le sol et fixer ensuite le chargeur de papier.

---

20. Conecte el conector de la unidad de transporte de papel intermedia (29).
21. Fije el sujetador (E) y asegure el cable del conector.

22. Inserte el resalto (30) de la cubierta para el cable (F) en el orificio (31) del depósito de papel e instale la cubierta para el cable (F).
23. Cierre la cubierta derecha del depósito de papel (26) y vuelva a colocar la cubierta derecha inferior (23) en la máquina.

24. Gire los reguladores en cada esquina (32) hasta que lleguen al piso y, a continuación, asegure el depósito de papel.

---

20. Den Steckverbinder (29) der eingesetzten Papierfördereinheit anschließen.
21. Die Klemme (E) anbringen und das Kabel des Steckverbinders sichern.

22. Die Nase (30) der Kabelabdeckung (F) in die Öffnung (31) des Papiereinzugs einsetzen und die Kabelabdeckung (F) anbringen.
23. Schließen Sie die rechte Abdeckung (26) des Papiereinzugs und setzen Sie die untere rechte Abdeckung (23) wieder im Gerät ein.

24. Die Einsteller an jeder Ecke (32) drehen, bis sie den Boden berühren, und dann den Papiereinzug sichern.

---

20. Collegare il connettore (29) dell'unità intermediale di trasporto carta.
21. Applicare il morsetto (E) e fissare il cavo del connettore.

22. Inserire la sporgenza (30) del coperchio cavi (F) nel foro (31) nell'unità di alimentazione della carta ed installare il coperchio cavi (F).
23. Chiudere il pannello destro (26) dell'alimentatore carta e rimontare il pannello destro inferiore (23) sulla macchina.

24. Ruotare i regolatori (32) presenti su ciascun angolo finché vengano a contatto con il pavimento, e quindi fissare l'unità di alimentazione della carta.

---

20. 连接中间搬运单元的接插件 (29)。
21. 安装束线夹 (E)，以固定接插件电线。

22. 将电线盖板 (F) 的突出部 (30) 插入供纸工作台的孔 (31) 中，安装电线盖板 (F)。
23. 关闭供纸工作台的右部盖板 (26)，按原样安装机器的右下部盖板 (23)。

24. 转动四角上的调节器 (32) 直至与地面接触，然后再固定供纸工作台。

---

20. 중간반송유니트의 커넥터 (29) 를 접속합니다 .
21. 클램프 (E) 를 부착 , 커넥터 전선을 고정합니다 .

22. 전선커버 (F) 의 돌기 (30) 를 급지대의 구멍 (31) 에 넣고 전선커버 (F) 를 부착합니다 .
23. 급지대 오른쪽 커버 (26) 를 닫고 본체의 오른쪽 하단 커버 (23) 를 다시 부착합니다 .

24. 네 곳의 어져스터 (32) 를 맨 밑에 닿을 위치까지 돌려 급지대를 고정합니다 .

---

20. 中間搬送ユニットのコネクター(29) を接続する。
21. クランプ (E) を取り付け、コネクター電線を固定する。

22. 電線カバー(F) の突起 (30) をペーパーフィーダーの穴 (31) に入れて、電線カバー (F) を取り付ける。
23. ペーパーフィーダーの右カバー(26) を閉じ、機械本体の右下カバー(23) を元通りに取り付ける。

24. 四隅のアジャスター(32) を床に接触する位置まで回し、ペーパーフィーダーを固定する。

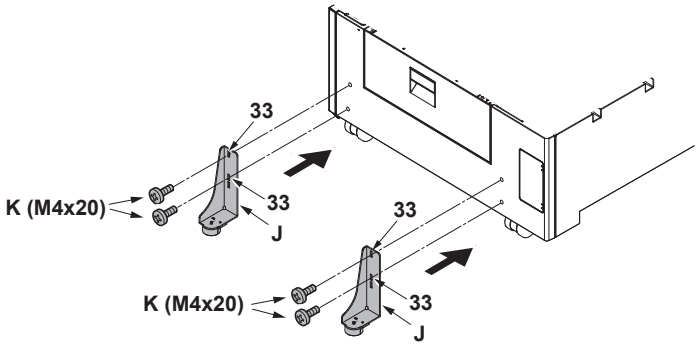

25. Select holes (33) and install each stopper (J) with 2 S Tite screws M4 × 20 (K) so that the stoppers will be grounded on the floor.

---

25. Sélectionner les trous (33) et installer chaque butée (J) avec 2 vis S Tite M4 × 20 (K) de sorte que les butées reposent sur le sol.

---

25. Seleccione los orificios (33) e instale cada tope (J) con los 2 tornillos S Tite M4 × 20 (K) de manera que los topes se conecten a tierra en el suelo.

---

25. Wählen Sie die Öffnungen (33) und befestigen Sie jeden Anschlag (J) mit den 2 S-Tite-Schrauben M4 × 20 (K) so an, dass die Anschläge am Boden aufsitzen.

---

25. Selezionare i fori (33) ed installare ogni fermo (J) con le 2 viti S Tite M4 × 20 (K) in modo che i fermi siano posti a terra sul pavimento.

---

25. 在孔（33）处各用 2 颗 M4×20 紧固型 S 螺丝（K）安装限位器（J），使之和地板接触。

---

25. 전도방지쇠 (J) 가 바닥면에 접지될 수 있도록 구멍 (33) 을 선택해 나사 M4×20 S 타이트 (K) 각 2 개로 설치합니다 .

---

25. 転倒防止金具 (J) が床面に接地するように、穴(33)を選択してビス M4×20 S タイト (K) 各 2 本で取り付ける。

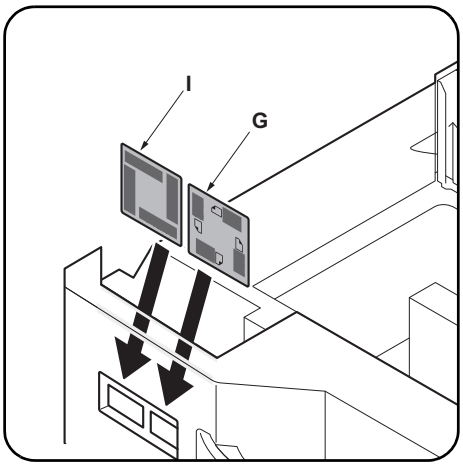

Setting the paper size plate and media type plate
Insert the paper size plate (G) and media type plate (I) into the each slots respectively.

Skewed paper feed adjustment
1. Connect the machine power plug to the wall outlet and turn the machine main power switch on.
2. Load paper into the cassette and make a test copy to check the image.
3. If the image is skewed (skewed paper feed), make the adjustments described below.
   <Reference value> Left-right difference of 1.5 mm or less

Disposition des plaquettes du format de papier et du type de support
Introduire la plaquette du format de papier (G) et la plaquette du type de support (I) dans leur logement respectif.

Réglage de l'entraînement du papier en biais
1. Insérer la fiche d'alimentation de la machine dans la prise murale et mettre la machine sous tension.
2. Mettre du papier dans le tiroir et effectuer une copie d'essai pour vérifier l'image.
3. Si l'image est en biais (entraînement du papier en biais), régler en procédant comme décrit ci-dessous.
   <Valeur de référence> Différence de droite à gauche de 1,5 mm ou moins.

Ajuste de la placa de tamaño de papel y la placa de tipo de medio
Inserte la placa de tamaño de papel (G) y la placa de tipo de medio (I) en cada uno de las ranuras, respectivamente.

Ajuste de alimentación de papel torcida
1. Conecte el enchufe de la máquina en el receptáculo de pared y encienda el interruptor principal de la máquina.
2. Introduzca papel en el cajón y haga una copia de prueba para verificar la imagen.
3. Si la imagen está torcida (alimentación del papel torcida) haga los ajustes que se describen a continuación.
   <Valor de referencia> diferencia izquierda-derecha de 1,5 mm o menor.

Einsetzen der Papierformatkarte und der Medientypkarte
Setzen Sie die Papierformatkarte (G) und die Medientypkarte (I) in die jeweiligen Führungen.

Einstellung bei verkantetem Papiereinzug
1. Stecken Sie den Netzstecker des Geräts in die Wandsteckdose und schalten Sie das Gerät am Hauptschalter ein.
2. Legen Sie Papier in die Papierlade ein und machen Sie eine Testkopie, um das Bild zu prüfen.
3. Nehmen Sie nachstehende Einstellungen vor, falls das Bild verkantet ist (verkanteter Papiereinzug).
   <Bezugswert> Links-rechts-Differenz maximal 1,5 mm.

Impostazione della piastra di formato carta e della piastra del tipo di supporto
Inserire la piastra del formato carta (G) e la piastra del tipo di supporto (I) nei rispettivi alloggiamenti.

Regolazione alimentazione obliqua carta
1. Collegare la spina della macchina alla presa di corrente a muro e accendere l'interruttore di alimentazione della macchina.
2. Caricare carta nel cassetto ed eseguire una copia di prova per controllare l'immagine.
3. Se l'immagine risulta obliqua (alimentazione obliqua della carta), eseguire le regolazioni descritte sotto.
   <Valore di riferimento> Differenza tra destra e sinistra di 1,5 mm o inferiore

---

纸张尺寸标识片和纸张种类标识片的安装
将纸张尺寸标识片（G）和纸张种类标识片（I）分别插入到图示的插槽中。

歪斜进纸调节
1. 将机器上的电源插头插入电源插座中，打开主电源开关。
2. 在纸盒中放入纸张。进行测试复印以确认图像。
3. 图像倾斜（歪斜进纸）时进行以下调节。
   ＜基准值＞左右差 1.5㎜ 以下

용지크기 플레이트와 용지종류 플레이트의 세트
용지크기 플레이트 (G) 와 용지종류 플레이트 (I) 를 각표시 슬롯에 각각 삽입한다 .

경사급지 조정
1. 본체 전원 플러그를 벽 콘센트에 연결하고 본체의 주 전원 스위치를 켭니다 .
2. 카세트에 용지를 장착합니다 . 시험복사를 하고 화상을 확인합니다 .
3. 화상이 기울어져 있는 (경사급지) 경우에는 다음 조정을 합니다 .
   ＜기준치＞ 좌우차 1.5mm 이하

用紙サイズプレートと用紙種類プレートのセット
用紙サイズプレート (G) と用紙種類プレート (I) を各表示スロットにそれぞれ挿入する。

斜め給紙調整
1. 機械本体の電源プラグをコンセントに差し込み、主電源スイッチを ON にする。
2. カセットに用紙をセットする。テストコピーをおこない、画像を確認する。
3. 画像が傾いている(斜め給紙)場合は次の調整をおこなう。
   ＜基準値＞左右差 1.5㎜ 以下

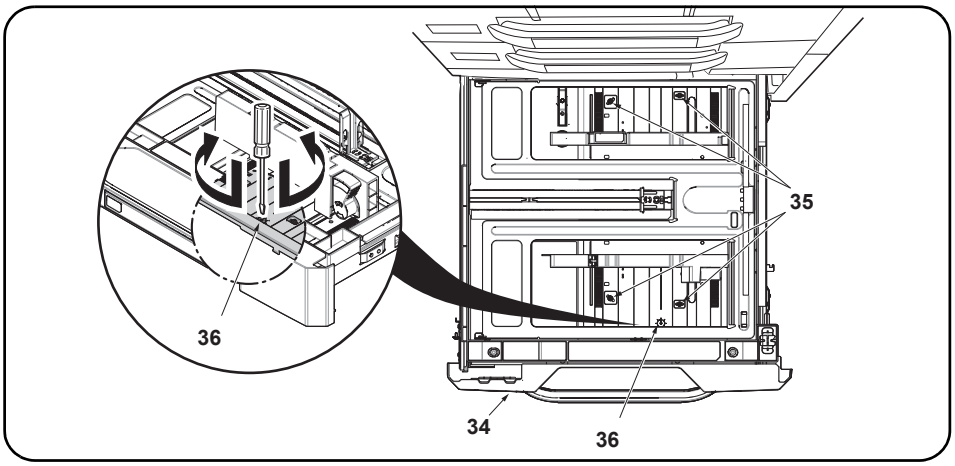

4. Pull out the cassette (34) in the paper feeder and loosen the 4 screws (35).
5. Turn the adjusting screw (36) to adjust the cursor skew.
6. Retighten the 4 screws (35).
7. Make another test copy to check the image.

---

4. Sortir le tiroir (34) du chargeur de papier et desserrer les 4 vis (35).
5. Faire tourner la vis de réglage (36) pour régler la déviation du curseur.
6. Resserrer les 4 vis (35).
7. Faire une autre copie d'essai pour vérifier l'image.

---

4. Extraiga el cajón (34) del depósito de papel y afloje los 4 tornillos (35).
5. Gire el tornillo de ajuste (36) para ajustar la desviación del cursor.
6. Vuelva a apretar los 4 tornillos (35).
7. Haga otra copia de prueba para verificar la imagen.

---

4. Ziehen Sie die Papierlade (34) aus dem Papiereinzug und lösen Sie die 4 Schrauben (35).
5. Drehen Sie die Einstellschraube (36), um die Cursor-Verkantung zu korrigieren.
6. Ziehen Sie die 4 Schrauben (35) wieder an
7. Erstellen Sie zur Überprüfung des Bilds noch einmal eine Testkopie.

---

4. Estrarre il cassetto (34) dell'unità di alimentazione della carta e quindi allentare le 4 viti (35).
5. Ruotare la vite di regolazione (36) per regolare l'inclinazione del cursore.
6. Ristringere le 4 viti (35).
7. Eseguire un'altra copia di prova per controllare l'immagine.

---

4. 拉出供纸盒（34），拧松 4 颗螺丝（35）。
5. 旋转调节螺丝（36），以调节游标的倾斜。
6. 拧紧 4 颗螺丝（35）。
7. 再次进行测试复印，确认图像。

---

4. 급지 카세트 (34) 를 빼 내어 나사 (35) 4 개를 느슨하게 합니다 .
5. 조정나사 (36) 을 돌려 커서 경사조정을 합니다 .
6. 나사 (35) 4 개를 조입니다 .
7. 다시 시험복사를 하고 화상을 확인합니다 .

---

4. ペーパーフィーダーのカセット（34）を引き出し、ビス（35）4 本を緩める。
5. 調整ネジ（36）を回し、カーソルの傾き調整をおこなう。
6. ビス（35）4 本を締め付ける。
7. 再度、テストコピーをおこない、画像を確認する。

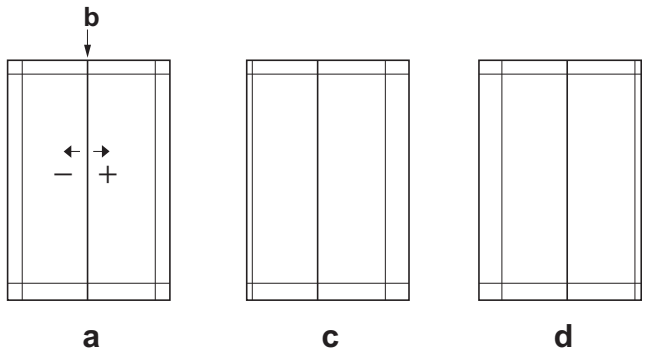

Adjusting the center line

The reference value for the center line is ±0.5 mm or less at position (b) in the correct image (a). If the center line position is outside this range, perform the following adjustment.

1. Set maintenance mode U034, select LSU Out Left and Cassette3 or Cassette4.
2. Adjust the values.
   Test pattern (c): Increase the setting value. Test pattern (d): Decrease the setting value.
3. Press the Start key to confirm the setting value.

Réglage de l'axe

La valeur de référence pour l'axe est de ±0,5 mm ou moins à la position (b) d'une image correcte (a). Si la position de l'axe est hors de cette plage, effectuez le réglage suivant.

1. Passer en mode maintenance U034, sélectionner LSU Out Left et Cassette3 ou Cassette4.
2. Régler les valeurs.
   Mire d' essai (c): Augmentez la valeur de réglage. Mire d' essai (d): Diminuez la valeur de réglage.
3. Appuyer sur la touche de Start pour confirmer la valeur de réglage.

Ajuste de la línea central

El valor de referencia de la línea central es de ±0,5 mm o menor, en la posición (b) de la imagen correcta (a). Si la posición de la línea central estuviera fuera de este rango, haga el siguiente ajuste.

1. Entre al modo de mantenimiento U034, seleccione LSU Out Left y Cassette3 o Cassette4.
2. Ajuste los valores.
   Patrón de prueba (c): Aumente el valor de configuración. Patrón de prueba (d): Reduzca el valor de configuración.
3. Pulse la tecla de Start para confirmar el valor de configuración.

Einstellen der Mittenlinie

Der Bezugswert für die Mittenlinie ist ±0,5 mm oder weniger an Position (b) des korrekten Bilds (a). Falls die Mittenlinie außerhalb dieses Bereichs liegt, ist folgende Einstellung vorzunehmen.

1. Schalten Sie in den Wartungsmodus U034, wählen Sie LSU Out Left und Cassette3 oder Cassette4.
2. Die Werte einstellen.
   Testmuster (c): Den Einstellwert erhöhen. Testmuster (d): Den Einstellwert verringern.
3. Den Einstellwert durch Drücken der Start-Taste bestätigen.

Regolazione della linea centrale

Il valore di riferimento per la linea centrale è ±0,5 mm o inferiore alla posizione (b) nell'immagine corretta (a). Se la posizione della linea centrale è all'infuori di questa gamma, effettuare la regolazione seguente.

1. Impostare la modalità manutenzione U034, selezionare LSU Out Left e Cassette3 o Cassette4.
2. Regolare i valori.
   Modello di prova (c): Aumentare il valore dell'impostazione. Modello di prova (d): Diminuire il valore dell'impostazione.
3. Premere il tasto di Start per confermare il valore dell'impostazione.

中心线调节

中心线的基准值在矫正图像 (a) 的 (b) 位置为 ±0.5mm 以内。超出该范围时，须进行以下调节。

1. 设置维护模式 U034，选择 LSU Out Left、Cassette3 或 Cassette4。
2. 调整设定值。
   测试图案 (c)：调高设定值。 测试图案 (d)：调低设定值。
3. 按 Start 键，以确定设定值。

센터라인 조정

센터라인은 적정화상 (a) 의 (b) 위치에서 기준치는 ±0.5mm 이내 . 여기에서 벗어나는 것은 이하의 조정을 합니다 .

1. 메인터넌스 모드 U034 를 세트하고 LSU Out Left, Cassette3 또는 Cassette4 를 선택합니다 .
2. 설정치를 조정합니다 .
   테트스 패턴 (c) :설정치를 높입니다 . 테스트 패턴 (d) :설정치를 내립니다 .
3. 시작키를 누르고 설정치를 확인합니다 .

センターライン調整

センターラインは、適正画像 (a) の (b) の位置で基準値は ±0.5mm 以内。これから外れるときは以下の調整をおこなう。

1. メンテナンスモード U034 をセットし、LSU Out Left、Cassette3 または Cassette4 を選択する。
2. 設定値を調整する。
   テストパターン (c) :設定値を上げる。 テストパターン (d) :設定値を下げる。
3. スタートキーを押し、設定値を確定する。

MEMO

MEMO

303NJ5674001

2013. 1
303NJ56740-01

INSTALLATION GUIDE FOR LARGE CAPACITY FEEDER

INSTALLATION GUIDE

GUIDE D’INSTALLATION

GUÍA DE INSTALACION

INSTALLATIONSANLEITUNG

GUIDA ALL’INSTALLAZIONE

安装手册

설치안내서

設置手順書

PF-740(B)

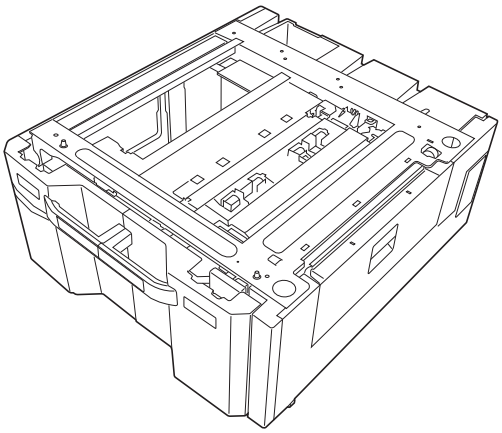

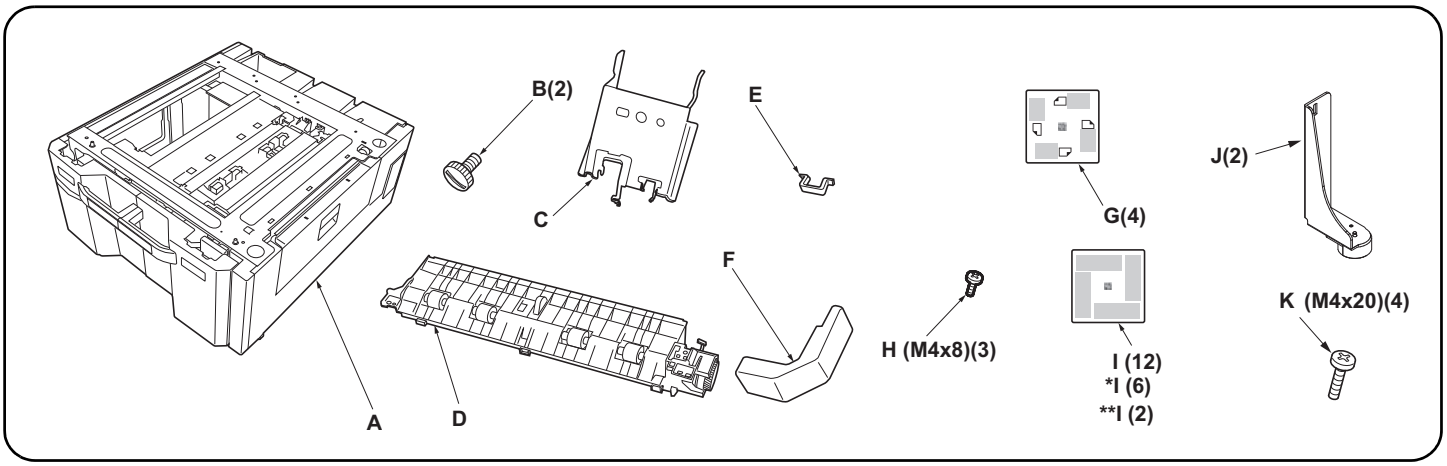

English

Supplied parts

A. Paper feeder 1
B. Pin 2
C. Retainer 1
D. Intermediate paper conveying unit 1
E. Clamp 1
F. Wire cover 1
G. Paper size plate 4
H. S Tite screw M4 × 8 3
I. Media type plate(except for 120V model) 12
***I.** Media type plate(120V model only) 6
J. Stopper 2
K. S Tite screws M4 × 20 4

Be sure to remove any tape and/or cushioning materials from the parts supplied.

Français

Pièces fournies

A. Chargeur de papier 1
B. Broche 2
C. Élément de retenue 1
D. Unité de transport du papier intermédiaire 1
E. Collier 1
F. Couvercle de câble 1
G. Plaquette du format de papier 4
H. Vis S Tite M4 × 8 3
I. Plaquette du type de support 12
J. Butée 2
K. Vis S Tite M4 × 20 4

Veillez à retirer les morceaux de bande adhésive et/ou les matériaux de rembourrage des pièces fournies.

Español

Partes suministradas

A. Depósito de papel 1
B. Clavija 2
C. Retén 1
D. Unidad de transporte de papel intermedia. 1
E. Sujetador 1
F. Cubierta para el cable 1
G. Placa de tamaño de papel 4
H. Tornillo S Tite M4 × 8 3
I. Placa de tipo de medio 12
J. Tope 2
K. Tornillos S Tite M4 × 20 4

Asegúrese de despegar todas las cintas y/o material amortiguador de las partes suministradas.

Deutsch

Enthaltene Teile

A. Papiereinzug 1
B. Stift 2
C. Halterung 1
D. Eingesetzte Papierfördereinheit 1
E. Klemme 1
F. Kabelabdeckung 1
G. Papierformatkarte 4
H. S-Tite-Schraube M4 × 8 3
I. Medientypkarte 12
J. Anschlag 2
K. S-Tite-Schrauben M4 × 20 4

Stellen Sie sicher, dass sämtliche Klebebänder und/oder Polstermaterial von den gelieferten Teilen entfernt wurden.

Italiano

Parti fornite

A. Unità di alimentazione della carta 1
B. Perno 2
C. Fermo 1
D. Unità intermediale di trasporto carta 1
E. Morsetto 1
F. Coperchio cavi 1
G. Piastra formato carta 4
H. Vite S Tite M4 × 8 3
I. Piastra tipo carta 12
J. Fermo 2
K. Vite S Tite M4 × 20 4

Rimuovere tutti i nastri adesivi e/o i materiali di protezione dalle parti fornite.

简体中文

附属品

A. 供纸工作台 1
B. 固定插销 2
C. 安装板 1
D. 中间搬运单元 1
E. 束线夹 1
F. 电线盖板 1
G. 纸张尺寸标识片 4
H. 紧固型 S 螺丝 M4×8 3
**I. 纸张种类标识片 2
J. 限位器 2
K. 紧固型 S 螺丝 M4×20 4

如果附属品上带有固定胶带，缓冲材料时务必揭下。

한국어

동봉품

A. 급지대 1
B. 핀 2
C. 부착판 1
D. 중간반송유니트 1
E. 크램프 1
F. 전선커버 1
G. 용지크기 플레이트 4
H. 나사 M4×8 S 타이트 3
**I. 용지종류 플레이트 2
J. 전도방지쇠 2
K. 나사 M4×20 S 타이트 4

동봉품에 고정 테이프 , 완충재가 붙어 있는 경우에는 반드시 제거할 것 .

日本語

同梱品

A. ペーパーフィーダー 1
B. ピン 2
C. 取付板 1
D. 中間搬送ユニット 1
E. クランプ 1
F. 電線カバー 1
G. 用紙サイズプレート 4
H. ビス M4×8 S タイト 3
**I. 用紙種類プレート 2
J. 転倒防止金具 2
K. ビス M4×20 S タイト 4

同梱品に固定テープ、緩衝材が付いている場合は必ず取り外すこと。

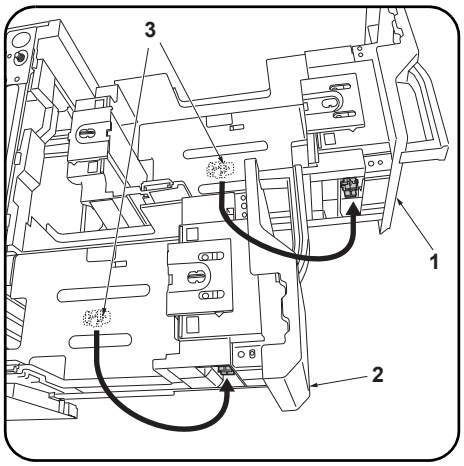

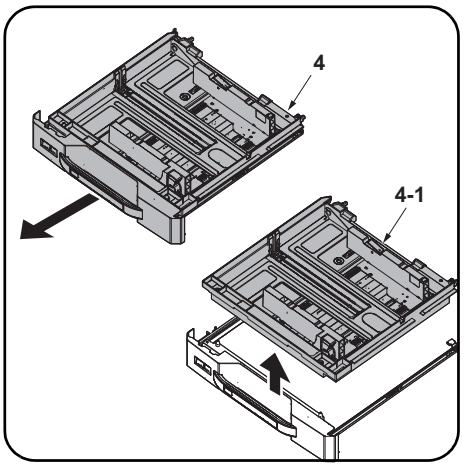

Procedure
Before starting installation, be sure to turn the main power switch of the machine off, and unplug the power plug from the wall outlet.

1. Pull out the right cassette (1) and the left cassette (2) from the paper feeder (A). Remove the lift plate stopper (3) from each cassette and attach it to the storage location.
2. Gently close each cassette.
3. Pull out the lower paper cassette (4) from the machine.
4. Remove the paper cassette (4-1).

Procédure
Avant de commencer l'installation, s'assurer de mettre la machine hors tension et de débrancher la fiche d'alimentation de la prise murale.

1. Sortez le magasin droit (1) et le magasin gauche (2) du chargeur de papier (A). Retirez la butée de la plaque de levage (3) de chaque magasin et fixez-la dans l'emplacement de stockage.
2. Refermer progressivement chaque tiroir.
3. Sortez le magasin de papier inférieur (4) de la machine.
4. Retirez le magasin de papier (4-1).

Procedimiento
Antes de iniciar la instalación, asegúrese de apagar el interruptor de encendido de la máquina y desenchufar el cable de alimentación de la toma de pared.

1. Extraiga el depósito derecho (1) y el depósito izquierdo (2) del depósito de papel (A). Quite el tope de placa de elevación (3) de cada depósito y póngalo en el espacio reservado para guardarlo.
2. Cierre suavemente cada bandeja.
3. Extraiga el depósito inferior (4) de la máquina.
4. Quite el depósito de papel (4-1).

Verfahren
Bevor Sie mit der Installation beginnen überzeugen Sie sich, dass der Netzschalter des Geräts ausgeschaltet und das Stromkabel aus der Steckdose gezogen ist.

1. Ziehen Sie die rechte Kassette (1) und die linke Kassette (2) aus dem Papiereinzug (A) heraus. Entfernen Sie die Verriegelung des Papierlifts (3) aus jeder Kassette und setzen Sie die Verriegelung in die Parkposition ein.
2. Alle Kassetten sachte schließen.
3. Ziehen Sie die untere Kassette (4) aus dem Gerät heraus.
4. Nehmen Sie die Papierkassette (4-1) heraus.

Procedura
Prima di iniziare l'installazione, spegnere la macchina e scollegare la spina dalla presa di corrente.

1. Estrarre il cassetto destro (1) e il cassetto sinistro (2) dall'unità di alimentazione carta (A). Rimuovere il fermo della piastra di sollevamento (3) da ogni cassetto e fissarlo sulla posizione a riposo.
2. Chiudere delicatamente ciascun cassetto.
3. Estrarre il cassetto carta inferiore (4) dalla macchina.
4. Nehmen Sie die Papierkassette (4-1) heraus.

安装步骤
安装前务必关闭机器的主电源开关，并从墙壁插座拔下电源插头。

1. 拉出供纸工作台 (A) 的右侧供纸盒 (1) 以及左侧供纸盒 (2)。拆下各 1 个升降板限位器 (3)，并安装在保管场所上。
2. 轻轻地推入各供纸盒。
3. 拉出机器主机的下部供纸盒 (4)。
4. 取下纸盒 (4-1)。

설치순서
설치를 시작하기 전에 반드시 본체의 주 전원 스위치를 끄고 벽 콘센트에서 전원 플러그를 분리하십시오 .

1. 급지대 (A) 의 카세트 오른쪽 (1) 및 카세트 왼쪽 (2) 을 꺼내니다 . 리프트판 스토퍼 (3) 각 1 개를 제거하고 보관장소에 부착합니다 .
2. 각 카세트를 조용히 밀어 넣습니다 .
3. 본체의 하단 용지 카세트 (4) 를 빼냅니다 .
4. 용지 카세트 (4-1) 를 제거합니다 .

取付手順
必ず機械本体の主電源スイッチを OFF にし、機械本体の電源プラグを抜いてから作業すること。

1. ペーパーフィーダー(A) のカセット右 (1) およびカセット左 (2) を引き出す。リフト板ストッパー(3) 各 1 個を取り外し、保管場所に取り付ける。
2. 各カセットを静かに押し込む。
3. 機械本体の下段カセット (4) を引き出す。
4. カセット (4-1) を取り外す。

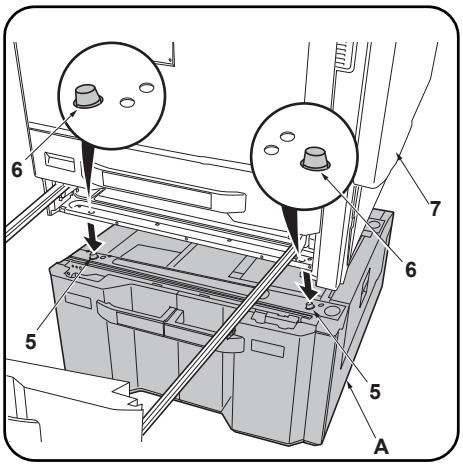

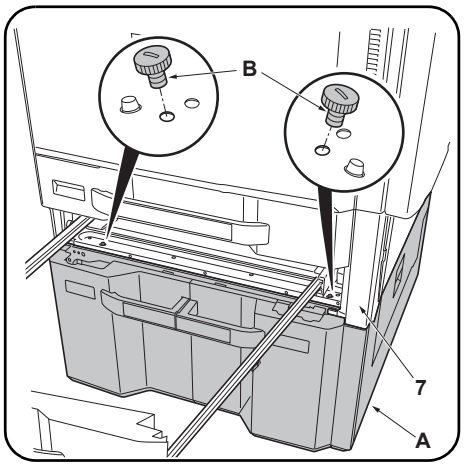

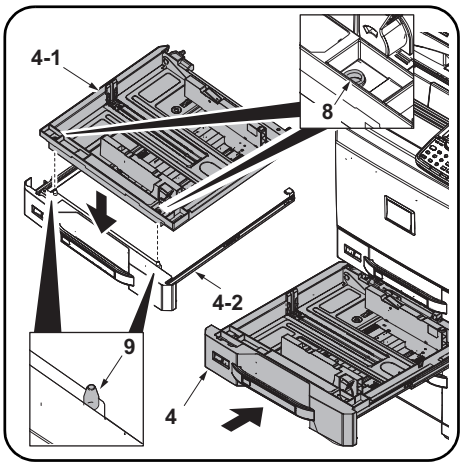

5. Place the machine (7) on the paper feeder (A) so that the pins (5) at the front left and front right of the paper feeder (A) are aligned with the holes (6) in the base of the machine.

6. Secure the machine (7) to the paper feeder (A) with the 2 pins (B).

7. Align the holes (8) of the lower cassette (4-1) for the machine with the pins (9) in the cassette slider (4-2). Put the paper cassette (4-1).

8. Push the lower paper cassette (4) in fully.

---

5. Monter la machine (7) sur le chargeur de papier (A) de sorte que les broches (5) à l'avant gauche et à l'avant droit du chargeur de papier (A) soient alignés avec les trous (6) dans la base du machine.

6. Fixer la machine (7) au chargeur de papier (A) avec les 2 broches (B).

7. Alignez les trous (8) du magasin inférieur (4-1) pour la machine avec les ergots (9) dans le tiroir du magasin (4-2). Placez le magasin de papier (4-1).

8. Enfoncez à fond le magasin de papier inférieur (4).

---

5. Coloque la máquina (7) sobre el depósito de papel (A) de forma que los pasadores (5) en los lados frontales izquierdo y derecho del depósito de papel (A) estén alineados con los orificios (6) de la base de la máquina.

6. Fije la máquina (7) al depósito de papel (A) con los dos pasadores (B).

7. Alinee los orificios (8) del depósito inferior (4-1) de la máquina con los pasadores (9) del deslizador del depósito (4-2). Coloque el depósito de papel (4-1).

8. Ejerza presión sobre el depósito de papel inferior (4) hasta introducirlo por completo.

---

5. Setzen Sie das Gerät (7) so auf den Papiereinzug (A), dass die Stifte (5) vorne links und vorne rechts am Papiereinzug (A) auf die Öffnungen (6) im Boden des Geräts ausgerichtet sind.

6. Sichern Sie das Gerät (7) mit den 2 Stiften (B) am Papiereinzug (A).

7. Richten Sie die Löcher (8) der Kassette (4-1) des Geräts mit den Stiften (9) im Kassettenanschlag (4-2) aus. Setzen Sie die Papierkassette (4-1) wieder ein.

8. Schieben Sie die Papierkassette (4) bis zum Anschlag ein.

---

5. Posizionare la macchina (7) sull'alimentatore carta (A) in modo che i perni (5) sul lato destro e sinistro anteriore dell'alimentatore carta (A) siano allineati con i fori (6) presenti sulla base della macchina.

6. Fissare la macchina (7) sull'alimentatore carta (A) con i 2 perni (B).

7. Allineare i fori (8) del cassetto inferiore (4-1) per la macchina con perni (9) della guida cassetto (4-2). Inserire il cassetto carta (4-1).

8. Spingere il cassetto carta inferiore (4) fino in fondo.

---

5. 供纸工作台 (A) 的左右前面的各插销 (5) 分别对准机器 主机底面的孔 (6) 后，将机器主机 (7) 放在供纸工作台 (A) 上。

6. 用 2 个固定插销 (B) 将机器主机 (7) 固定在供纸工作台 (A) 上。

7. 将机器下部供纸盒 (4-1) 的孔 (8) 和供纸盒导轨 (4-2) 的插销 (9) 对齐。 放置纸盒 (4-1)。

8. 完全推入下部供纸盒 (4)。

---

5. 급지대 (A) 의 전면 좌측과 전면 우측에 있는 각 핀 (5) 이 본체의 바닥면에 있는 구멍 (6) 에 맞도록 본체 (7) 를 급지대 (A) 위에 놓습니다 .

6. 핀 (B) 2 개로 본체 (7) 를 급지대 (A) 에 고정합니다 .

7. 본체의 하단 용지 카세트 (4-1) 의 구멍 (8) 과 카세트 슬라이더 (4-2) 의 핀 (9) 을 맞춥니다 . 용지 카세트 (4-1) 를 배치합니다 .

8. 하단 용지 카세트 (4) 를 완전히 밀어 넣습니다 .

---

5. ペーパーフィーダー(A) の左右前方の各ピン (5) と機械本体のベースの穴 (6) が合うように、ペーパーフィーダー(A) に機械本体 (7) を載せる。

6. ピン (B)2 本で機械本体 (7) をペーパーフィーダー(A) に固定する。

7. 機械本体の下段カセット (4-1) の穴 (8) とカセットスライダー(4-2) のピン (9) を合わせる。カセット (4-1) を置く。

8. 下段カセット (4) を奥まで押し込む。

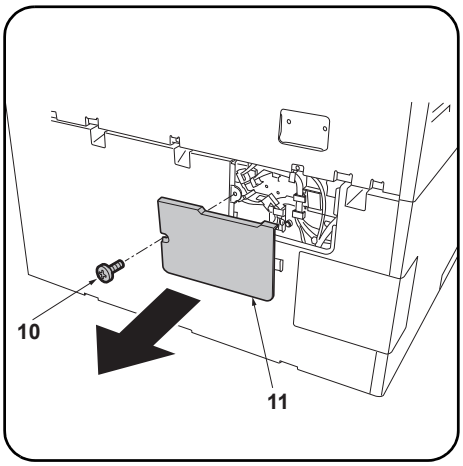

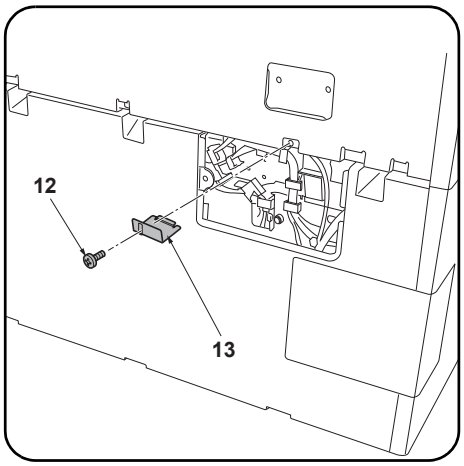

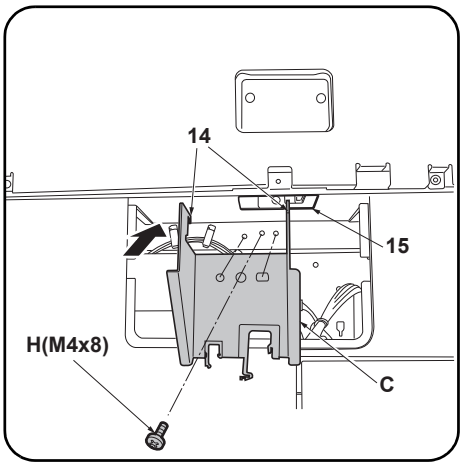

9. Remove the screw (10) in the rear of the paper feeder and remove the cover (11).

10. Remove the screw (12) to remove the metal plate (13).

11. Fit the hook (14) on the mounting plate (C) into the opening (15) and then align the 2 positioning projections.

12. Secure the mounting plate (C) with the S Tite screw M4 × 8 (H).

---

9. Déposer la vis (10) à l'arrière du chargeur de papier et déposer le couvercle (11).

10. Déposer la vis (12) pour enlever la plaque métallique (13).

11. Insérer le crochet (14) du p5ateau de montage (C) dans l'ouverture (15) et aligner les 2 saillies de positionnement.

12. Fixer le plateau de montage (C) avec la vis S Tite M4 × 8 (H).

---

9. Quite el tornillo (10) del lado trasero del depósito de papel y quite la cubierta (11).

10. Quite el tornillo (12) para desmontar la placa de metal (13).

11. Coloque el gancho (14) de la placa de montaje (C) en la abertura (15) y, después, alinee los 2 resaltos de posición.

12. Asegure la placa de montaje (C) con el tornillo S Tite M4 x 8 (H).

---

9. Die Schraube (10) an der Rückseite des Papiereinzugs entfernen und die Abdeckung (11) abnehmen.

10. Die Schraube (12) herausdrehen, um die Metallplatte (13) abzunehmen.

11. Den Haken (14) auf der Montageplatte (C) in die Öffnung (15) einpassen und dann die 2 Positionierungsnasen ausrichten.

12. Die Montageplatte (C) mit der S-Tite-Schraube M4 x 8 verwenden (H) befestigen.

---

9. Rimuovere la vite (10) nel retro dell'unità di alimentazione della carta e quindi rimuovere il coperchio (11).

10. Rimuovere la vite (12), per rimuovere la piastra di metallo (13).

11. Inserire il gancio (14) sulla piastra di montaggio (C) nell'apertura (15) e quindi allineare le 2 sporgenze di posizionamento.

12. Fissare la piastra di montaggio (C) con la vite S Tite M4×8 (H).

---

9. 拆除供纸工作台后部的 1 颗螺丝 (10)，拆下盖板 (11) 。

10. 拆除 1 颗螺丝 (12)，拆下金属件 (13)。

11. 将安装板 (C) 的挂钩 (14) 挂在开口部 (15) 上，并与定位用的 2 处突出部对齐。

12. 使用 1 颗紧固型 S 螺丝 M4×8 (H) 来固定安装板 (C)。

---

9. 급지대 후면의 뒤쪽 나사 (10) 1 개를 제거하고 커버 (11) 를 떼어 냅니다 .

10. 나사 (12) 1 개를 제거하고 쇠 (13) 를 제거합니다 .

11. 부착판 (C) 의 후크 (14) 를 개구부 (15) 에 걸고 위치고정 돌기 2 곳을 맞춥니다 .

12. 나사 M4×8 S 타이트 (H) 1 개로 부착판 (C) 을 고정합니다 .

---

9. ペーパーフィーダー後側のビス (10)1 本を外し、カバー(11) を取り外す。

10. ビス (12)1 本を外し、金具 (13) を取り外す。

11. 取付板 (C) のフック (14) を開口部 (15) に引っ掛けてから、位置決めの突起 2 箇所を合わせる。

12. ビス M4×8 S タイト (H)1 本で取付板 (C) を固定する。

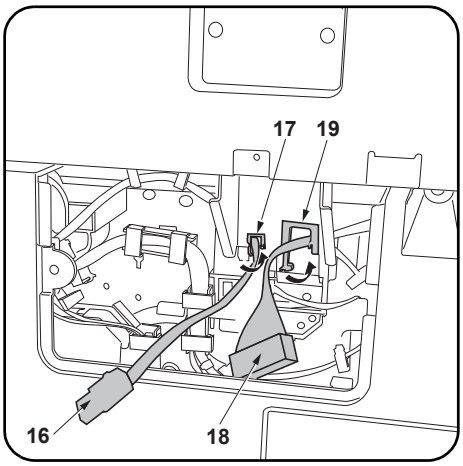

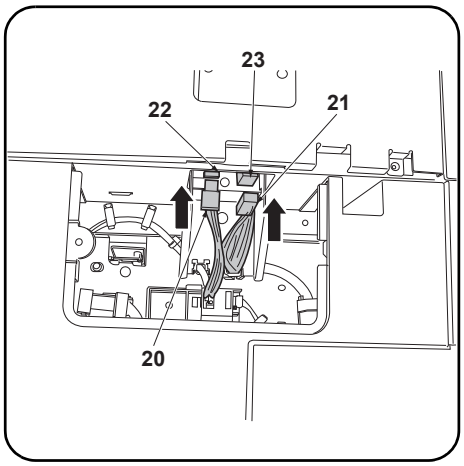

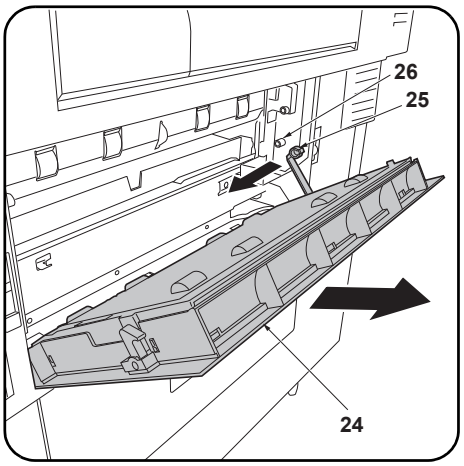

13. Pass the power cord (16) through the edging (small) (17) and the signal cable (18) through the edging (large) (19) and then close the edging

14. Connect the power cord (20) and the signal cable (21) to connectors (22) (23) respectively on the machine.

15. Replace the cover (11) using the screw (10) removed in step 9.

16. Open the lower right cover (24) on the machine.
Remove the strap (25) from the shaft (26) and remove lower right cover (24).

---

13. Faire passer le cordon d'alimentation (16) dans le (petit) passage (17) et le câble du signal (18) dans le (grand) passage (19) puis fermer le passage.

14. Raccorder respectivement le cordon d'alimentation (20) et le câble de signal (21) aux connecteurs (22) (23) de la machine.

15. Reposer le couvercle (11) à l'aide de la vis (10) déposée à l'étape 9.

16. Ouvrir le capot inférieur droit (24) de la machine.
Déposer la courroie (25) de l'arbre (26) et déposer le couvercle inférieur droit (24).

---

13. Pase el cable de alimentación (16) a través de la pestaña (pequeña) (17) y el cable de señales (18) a través de la pestaña (grande) (19) y, después, cierre la pestaña.

14. Conecte el cable de alimentación (20) y el cable de señal (21) a los conectores (22) (23) respectivamente de la máquina.

15. Vuelva a colocar la cubierta (11) usando el tornillo (10) quitado en el paso 9.

16. Abra la cubierta derecha inferior (24) de la máquina.
Quite la correa (25) del eje (26) y quite la cubierta frontal inferior (24).

---

13. Das Netzkabel (16) durch den Kantenschutz (klein) (17) und das Signalkabel (18) durch den Kantenschutz (groß) (19) führen und dann den Kantenschutz schließen.

14. Schließen Sie das Netzkabel (20) und das Signalkabel (21) an den entsprechenden Steckverbindern (22) (23) des Geräts an.

15. Die Abdeckung (11) mittels der in Schritt 9 entfernten Schraube (10) wieder anbringen.

16. Öffnen Sie die untere rechte Abdeckung (24) des Geräts.
Den Riemen (25) von der Welle (26) abnehmen und dann die untere rechte Abdeckung (24) abnehmen.

---

13. Passare il cavo di alimentazione (16) attraverso il bordo (piccolo) (17) e il cavo del segnale (18) attraverso il bordo (grande) (19), e quindi chiudere il bordo.

14. Collegare il cavo di alimentazione (20) e il cavo del segnale (21) ai connettori della macchina (22) e (23), rispettivamente.

15. Ricollocare il coperchio (11) utilizzando la vite (10) rimossa nel passo 9.

16. Aprire il pannello destro inferiore (24) sulla macchina.
Rimuovere la cinghietta (25) dall'asta (26) e quindi rimuovere il pannello destro inferiore (24).

---

13. 将 AC 电线 (16) 从束线孔 （小）(17)，信号线 (18) 从束线孔 （大）(19) 中分别穿过，关闭束线孔 。

14. 将 AC 电线 (20) 以及信号线 (21) 分别与主机的接插件 (22)、(23) 连接。

15. 使用在步骤 9 中拆除的 1 颗螺丝 (10) 按原样安装盖板 (11)。

16. 打开机器主机的右下部盖板 (24)。
将带子 (25) 从轴 (26) 上拆除，拆下右下部盖板 (24)。

---

13. AC 전선 (16) 을 에징 (소) (17) 에 , 신호선 (18) 을 에징 (대) (19) 에 각각 지나가게 하고 에징을 닫습니다 .

14. 전원 코드 (20) 및 신호 케이블 (21) 을 본체 커넥터 (22), (23) 에 각각 연결합니다 .

15. 순서 9 에서 제거한 나사 (10) 1 개로 커버 (11) 를 원래대로 부착합니다 .

16. 본체의 오른쪽 하단 커버 (24) 를 엽니다 .
스트라프 (25) 를 축 (26) 에서 떼어내 오른쪽 아래 커버 (24) 를 제거합니다 .

---

13. AC 電線 (16) をエッジング(小)(17) に、信号線 (18) をエッジング(大)(19) にそれぞれ通し、エッジングを閉じる。

14. AC 電線 (20) および信号線 (21) を本体のコネクター(22)、(23) にそれぞれ接続する。

15. 手順 9 で取り外したビス (10)1 本でカバー (11) を元通りに取り付ける。

16. 機械本体の右下カバー(24) を開く。
ストラップ (25) を軸 (26) から外し、右下カバー(24) を取り外す。

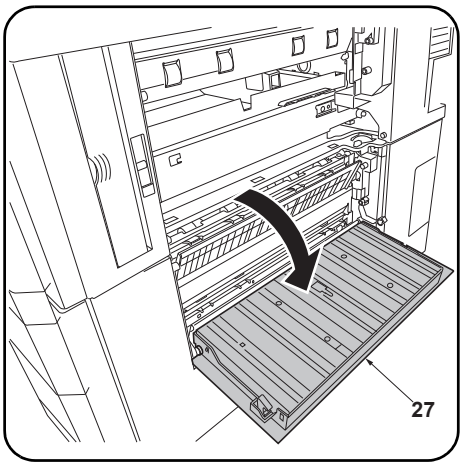

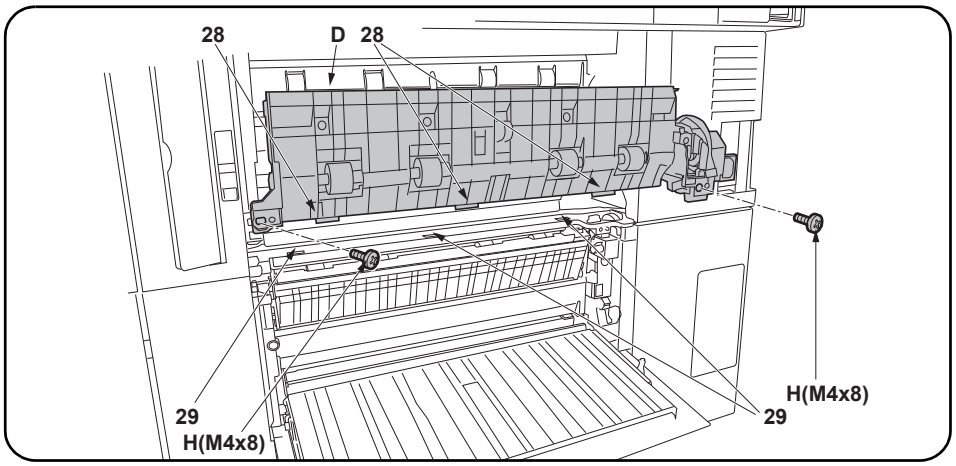

17. Open the paper feeder right cover (27).

18. Fit the 3 hooks (28) on the intermediate paper conveying unit (D) into the 3 holes (29) in the guide.

19. Secure the intermediate paper conveying unit (D) with the 2 S Tite screw M4 × 8 (H).

NOTICE

Be sure to use S Tite screw M4 × 8.

Using longer screws, such as S Tite screws M4 × 20, may damage wires.

---

17. Ouvrir le couvercle droit du chargeur de papier (27).

18. Insérer les 3 crochets (28) de l'unité de transport du papier intermédiaire (D) dans les 3 trous (29) du guide.

19. Fixer l'unite de transport du papier intermediaire (D) a l'aide des 2 Vis S Tite M4 × 8 (H).

REMARQUE

S'assurer d'utiliser la vis S Tite M4 × 8.

L'utilisation de vis plus longues, comme les vis S Tite M4 × 20, peut endommager les fils.

---

17. Abra la cubierta derecha del depósito de papel (27).

18. Coloque los 3 ganchos (28) de la unidad de transporte de papel intermedia (D) en los 3 orificios (29) de la guía.

19. Asegure la unidad de transporte de papel intermedia (D) con los 2 Tornillo S Tite M4 × 8 (H).

AVISO

Asegúrese de usar tornillos S Tite M4 x 8.

El uso de tornillos más largos, como tornillos S Tite M4 x 20, puede dañar los cables.

---

17. Die rechte Abdeckung (27) des Papiereinzugs öffnen.

18. Die 3 Haken (28) an der eingesetzten Papierfördereinheit (D) in die 3 Öffnungen (29) in der Führung einpassen.

19. Die eingesetzte Papierfordereinheit (D) mit den 2 S-Tite-Schraube M4 × 8 (H) sichern.

ANMERKUNG

Stellen Sie sicher, dass Sie die S-Tite-Schraube M4 x 8 verwenden.

Die Verwendung von längeren Schrauben als den S-Tite-Schrauben M4 x 20 kann Kabel beschädigen.

---

17. Aprire il pannello destro (27) dell'unità di alimentazione della carta.

18. Inserire i 3 ganci (28) sull'unità intermediale di trasporto carta (D) nei 3 fori (29) nella guida.

19. Fissare l'unita intermediale di trasporto carta (D) con le 2 Vite S Tite M4 × 8 (H).

AVVISO

Utilizzare solo la vite S Tite M4 × 8.

Se si utilizzano viti più lunghe, come le viti S Tite M4 × 20, si possono danneggiare i fili.

---

17. 打开供纸工作台的右部盖板 (27)。

18. 将中间搬运单元 (D) 的 3 个挂钩 (28) 嵌入导向板的 3 个孔 (29) 中。

19. 使用 2 颗紧固型 S 螺丝 M4×8(H) 来固定中间搬运单元 (D)。

注意

必须使用紧固型 S 螺丝 M4×8。

如使用长螺丝 (紧固型 S 螺丝 M4×20)，可能会使电线受到损伤。

---

17. 급지대 오른쪽 커버 (27) 를 엽니다 .

18. 중간반송유니트 (D) 의 후크 (28) 3 개를 가이드 구멍 (29) 3 곳에 꽂습니다 .

19. 나사 M4×8 S 타이트 (H) 2 개로 중간반송유니트 (D) 를 고정합니다 .

주의

반드시 나사 M4×8 S 타이트를 사용하십시오 .

더 긴 나사 (예 : 나사 M4×20 S 타이트) 를 사용할 경우 와이어가 손상될 수 있습니다 .

---

17. ペーパーフィーダーの右カバー(27) を開く。

18. 中間搬送ユニット (D) のフック (28)3 個をガイドの穴 (29)3 カ所にはめ込む。

19. ビス M4×8 S タイト (H)2 本で中間搬送ユニット (D) を固定する。

注意

必ずビス M4×8 S タイトを使用すること。

長いビス (M4×20 S タイト) を使用すると電線を傷付けることがあります。

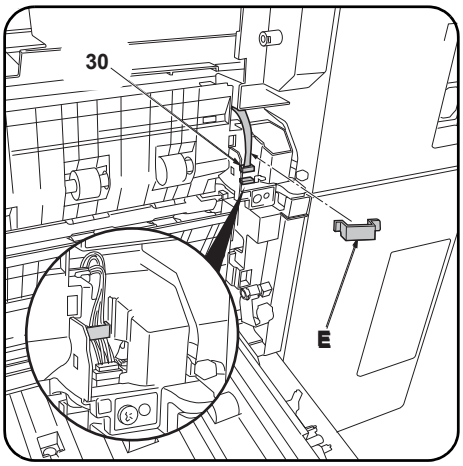

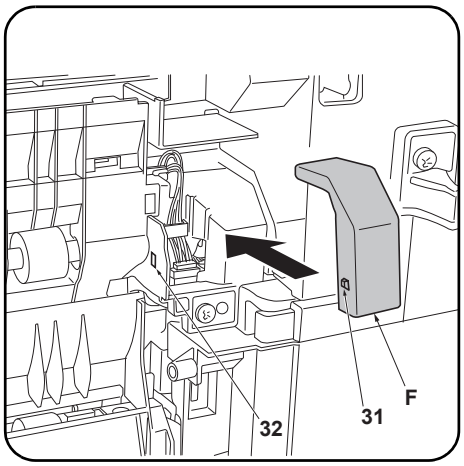

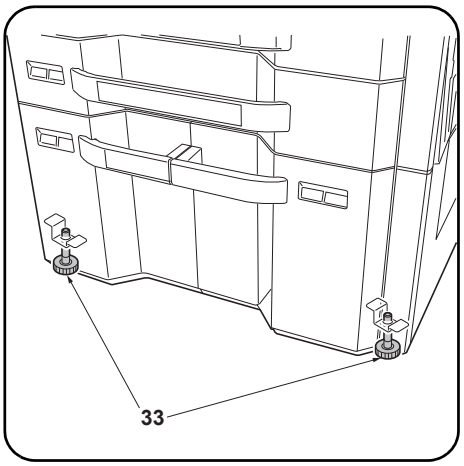

20. Connect the intermediate paper conveying unit connector (30).
21. Attach the clamp (E) and secure the connector wire.

22. Insert the projection (31) on the wire cover (F) into the hole (32) in the paper feeder and install the wire cover (F).
23. Close the paper feeder right cover (27) and replace the lower right cover (24) on the machine.

24. Turn the adjusters on each corner (33) until they reach the floor and then secure the paper feeder.

---

20. Raccorder le connecteur (30) de l'unité de transport du papier intermédiaire.
21. Monter le collier (E) et fixer le câble du connecteur.

22. Insérer la saillie (31) du couvercle du câble (F) dans le trou (32) du chargeur de papier et reposer le couvercle du câble (F).
23. Fermer le couvercle droit du chargeur de papier (27) et reposer le capot inférieur droit (24) sur la machine.

24. Faire tourner les dispositifs de réglage de chacun des coins (33) jusqu'à ce qu'ils touchent le sol et fixer ensuite le chargeur de papier.

---

20. Conecte el conector de la unidad de transporte de papel intermedia (30).
21. Fije el sujetador (E) y asegure el cable del conector.

22. Inserte el resalto (31) de la cubierta para el cable (F) en el orificio (32) del depósito de papel e instale la cubierta para el cable (F).
23. Cierre la cubierta derecha del depósito de papel (27) y vuelva a colocar la cubierta derecha inferior (24) en la máquina.

24. Gire los reguladores en cada esquina (33) hasta que lleguen al piso y, a continuación, asegure el depósito de papel.

---

20. Den Steckverbinder (30) der eingesetzten Papierfördereinheit anschließen.
21. Die Klemme (E) anbringen und das Kabel des Steckverbinders sichern.

22. Die Nase (31) der Kabelabdeckung (F) in die Öffnung (32) des Papiereinzugs einsetzen und die Kabelabdeckung (F) anbringen.
23. Schließen Sie die rechte Abdeckung (27) des Papiereinzugs und setzen Sie die untere rechte Abdeckung (24) wieder im Gerät ein.

24. Die Einsteller an jeder Ecke (33) drehen, bis sie den Boden berühren, und dann den Papiereinzug sichern.

---

20. Collegare il connettore (30) dell'unità intermediale di trasporto carta.
21. Applicare il morsetto (E) e fissare il cavo del connettore.

22. Inserire la sporgenza (31) del coperchio cavi (F) nel foro (32) nell'unità di alimentazione della carta ed installare il coperchio cavi (F).
23. Chiudere il pannello destro (27) dell'alimentatore carta e rimontare il pannello destro inferiore (24) sulla macchina.

24. Ruotare i regolatori (33) presenti su ciascun angolo finché vengano a contatto con il pavimento, e quindi fissare l'unità di alimentazione della carta.

---

20. 连接中间搬运单元的接插件 (30)。
21. 安装束线夹 (E)，以固定接插件电线。

22. 将电线盖板 (F) 的突出部 (31) 插入供纸工作台的孔 (32) 中，安装电线盖板 (F)。
23. 关闭供纸工作台的右部盖板 (27)，按原样安装机器主机的右下部盖板 (24)。

24. 转动四角上的调节器 (33) 直至与地面接触，然后再固定供纸工作台。

---

20. 중간반송유니트의 커넥터 (30) 를 접속합니다 .
21. 클램프 (E) 를 부착 , 커넥터 전선을 고정합니다 .

22. 전선커버 (F) 의 돌기 (31) 를 급지대의 구멍 (32) 에 넣고 전선커버 (F) 를 부착합니다 .
23. 급지대 오른쪽 커버 (27) 를 닫고 본체의 오른쪽 하단 커버 (24) 를 다시 부착합니다 .

24. 네 곳의 어져스터 (33) 를 맨 밑에 닿을 위치까지 돌려 급지대를 고정합니다 .

---

20. 中間搬送ユニットのコネクター(30) を接続する。
21. クランプ (E) を取り付け、コネクター電線を固定する。

22. 電線カバー(F) の突起 (31) をペーパーフィーダーの穴 (32) に入れて、電線カバー (F) を取り付ける。
23. ペーパーフィーダーの右カバー(27) を閉じ、機械本体の右下カバー(24) を元通りに取り付ける。

24. 四隅のアジャスター(33) を床に接触する位置まで回し、ペーパーフィーダーを固定する。

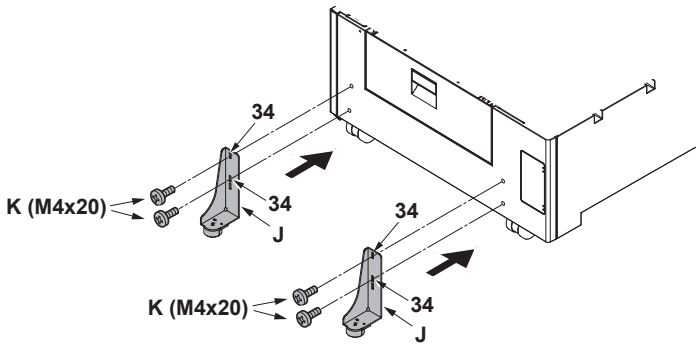

25. Select holes (34) and install each stopper (J) with 2 S Tite screws M4 × 20 (K) so that the stoppers will be grounded on the floor.

---

25. Sélectionner les trous (34) et installer chaque butée (J) avec 2 vis S Tite M4 × 20 (K) de sorte que les butées reposent sur le sol.

---

25. Seleccione los orificios (34) e instale cada tope (J) con los 2 tornillos S Tite M4 × 20 (K) de manera que los topes se conecten a tierra en el suelo.

---

25. Wählen Sie die Öffnungen (34) und befestigen Sie jeden Anschlag (J) mit den 2 S-Tite-Schrauben M4 × 20 (K) so an, dass die Anschläge am Boden aufsitzen.

---

25. Selezionare i fori (34) ed installare ogni fermo (J) con le 2 viti S Tite M4 × 20 (K) in modo che i fermi siano posti a terra sul pavimento.

---

25. 在孔（34）处各用 2 颗 M4×20 紧固型 S 螺丝（K）安装限位器（J），使之和地板接触。

---

25. 전도방지쇠 (J) 가 바닥면에 접지될 수 있도록 구멍 (34) 을 선택해 나사 M4×20 S 타이트 (K) 각 2 개로 설치합니다 .

---

25. 転倒防止金具 (J) が床面に接地するように、穴(34)を選択してビス M4×20 S タイト (K) 各 2 本で取り付ける。

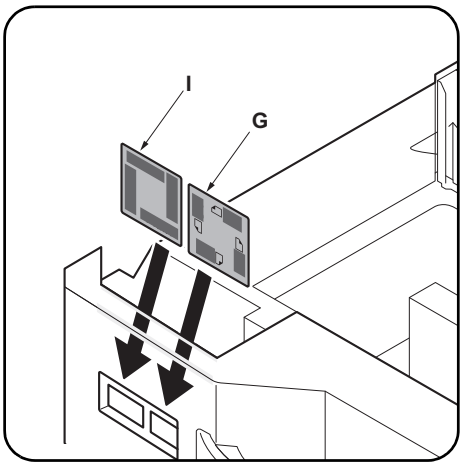

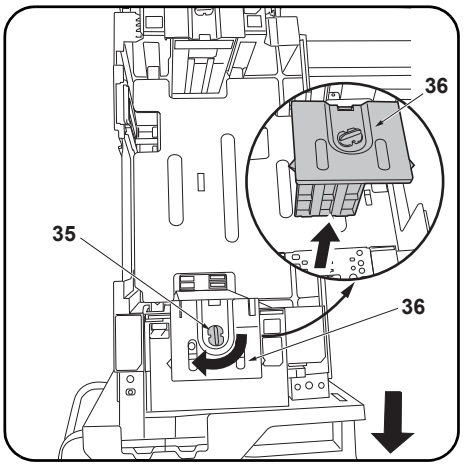

Setting the paper size plate and media type plate
Insert the paper size plate (G) and media type plate (I) into the each slots respectively.

Changing paper size (metric specifications only)
At shipment, Letter is set for inch models and A4 is set for metric models. Use the procedure below to change the size to B5.

1. Pull out the cassette of the paper feeder.
2. Turn the front lock lever (35) 90° and remove the front deck cursor (36).

Disposition des plaquettes du format de papier et du type de support
Introduire la plaquette du format de papier (G) et la plaquette du type de support (I) dans leur logement respectif.

Modification du format du papier (pour spécifications métriques seulement)
À expédition, les modèles à mesure en pouces sont réglés sur le format Letter et les modèles à mesure métrique sur le format A4. Pour passer au format B5, procéder de la manière suivante.

1. Tirer le magasin du chargeur de papier vers soi.
2. Faire tourner le levier de verrouillage avant (35) de 90º et déposer le curseur de platine avant (36).

Ajuste de la placa de tamaño de papel y la placa de tipo de medio
Inserte la placa de tamaño de papel (G) y la placa de tipo de medio (I) en cada uno de las ranuras, respectivamente.

Cómo cambiar el tamaño de papel (sólo para las especificaciones métricas)
En el momento de salida de fábrica, se configura Carta para los modelos en pulgadas y A4 para los modelos en sistema métrico. Siga este procedimiento para cambiar el tamaño a B5.

1. Abra el casete del depósito de papel.
2. Gire la palanca de bloqueo frontal (35) 90º y quite el cursor frontal de la plataforma (36).

Einsetzen der Papierformatkarte und der Medientypkarte
Setzen Sie die Papierformatkarte (G) und die Medientypkarte (I) in die jeweiligen Führungen.

Ändern des Papierformats (nur metrische Spezifikationen)
Beim Werksversand ist bei Modellen mit Zollmaß das Format Letter voreingestellt und bei Modellen mit metrischem Maß das Format A4.
Das Format kann wie folgend auf B5 umgeschaltet werden.

1. Ziehen Sie die Papierlade aus dem Papiereinzug.
2. Den vorderen Verriegelungshebel (35) um 90° drehen und den vorderen Konsole-Cursor (36) abnehmen.

Impostazione della piastra di formato carta e della piastra del tipo di supporto
Inserire la piastra del formato carta (G) e la piastra del tipo di supporto (I) nei rispettivi alloggiamenti.

Cambio del formato della carta (solo per le specifiche metriche)
Al momento della spedizione, Letter è impostato per le specifiche in pollici e A4 è impostato per le specifiche metriche. Usare la procedura riportata sotto per cambiare il formato a B5.

1. Estrarre il cassetto dell'unità di alimentatore della carta.
2. Ruotare la leva frontale di blocco (35) di 90° e rimuovere il cursore frontale del deck (36).

纸张尺寸标识片和纸张种类标识片的安装
将纸张尺寸标识片（G）和纸张种类标识片（I）分别插入到图示的插槽中。

纸张尺寸更改（仅限公制规格）
产品出厂时，英制规格设定为 Letter、公制规格设定为 A4。要将尺寸更改为 B5 时，请按以下步骤进行操作。

1. 拉出供纸工作台的供纸盒。
2. 将前部锁定杆（35）旋转 90°，拆下堆纸板前部游标（36）。

용지크기 플레이트와 용지종류 플레이트의 세트
용지크기 플레이트 (G) 와 용지종류 플레이트 (I) 를 각표시 슬롯에 각각 삽입한다 .

용지크기 변경 (센치 사양만)
출하시 , 인치사양은 Letter, 센치사양은 A4 로 설정되어 있습니다 . 크기를 B5 로 변경하는 경우에는 다음 순서를 진행해 주십시오 .

1. 급지대 카세트를 빼 냅니다 .
2. 잠금레버 앞 (35) 을 90° 회전시켜 데크커서 앞 (36) 을 제거합니다 .

用紙サイズプレートと用紙種類プレートのセット
用紙サイズプレート (G) と用紙種類プレート (I) を各表示スロットにそれぞれ挿入する。

用紙サイズ変更(センチ仕様のみ)
出荷時、インチ仕様は Letter、センチ仕様は A4 に設定されています。サイズを B5 に変更する場合は次の手順をおこなってください。

1. ペーパーフィーダーのカセットを引き出す。
2. ロックレバー前 (35) を 90° 回転させ、デッキカーソル前(36)を取り外す。

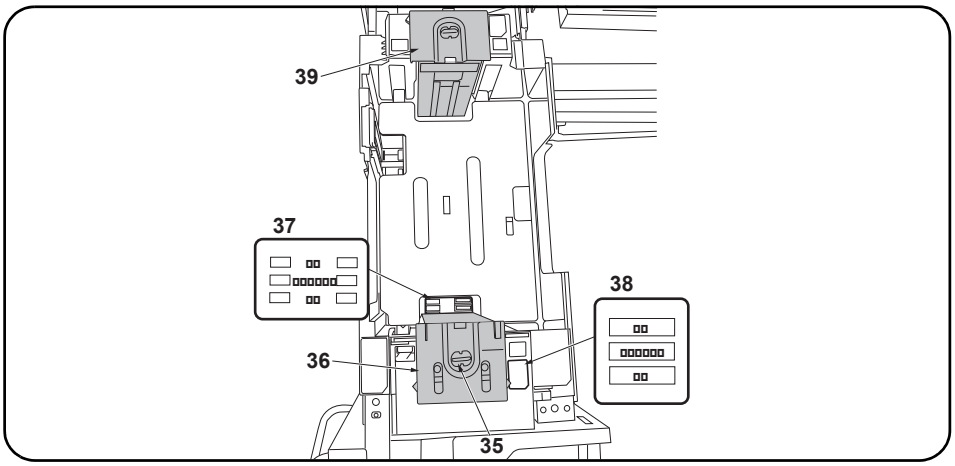

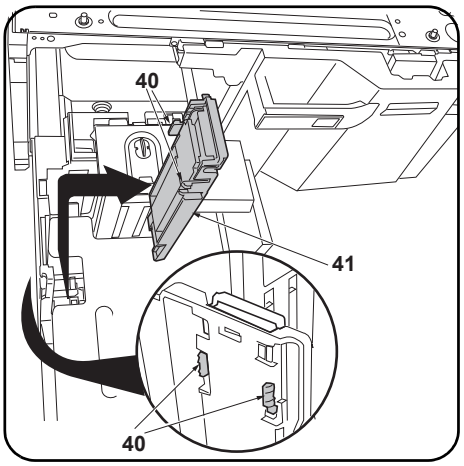

3. Move the front deck cursor (36) so that it is aligned with the size indicators on the top (38) and bottom (37) of the cassette.
4. Turn the front lock lever (35) 90° to lock it.
5. Move the rear deck cursor (39) in the same way.

6. Release the hook (40) and remove the deck trailing edge cursor (41).

---

3. Déplacer le curseur de platine avant (36) de sorte qu'il soit aligné avec les indicateurs de format en haut (38) et en bas (37) du tiroir.
4. Faire tourner le levier de verrouillage avant (35) de 90º pour le verrouiller.
5. Déplacer le curseur de platine arrière (39) en procédant de la même manière.

6. Libérer le crochet (40) et déposer le curseur du bord arrière de la platine (41).

---

3. Mueva el cursor frontal de la plataforma (36) para que quede alineado con las indicadores de tamaño de la parte superior (38) e inferior (37) del cajón.
4. Gire la palanca de bloqueo frontal (35) 90º para bloquearla.
5. Mueva el cursor trasero de la plataforma (39) de la misma forma.

6. Libere el gancho (40) y quite el cursor del borde inferior de la plataforma (41).

---

3. Den vorderen Konsole-Cursor (36) so verschieben, dass er mit den Formatanzeigen oben (38) und unten (37) an der Kassette fluchtet.
4. Den vorderen Verriegelungshebel (35) zum Verriegeln um 90° drehen.
5. Den hinteren Konsole-Cursor (39) auf gleiche Weise verschieben.

6. Den Haken (40) lösen und den Hinterkante-Cursor (41) der Konsole abnehmen.

---

3. Spostare il cursore frontale del deck (36) in modo che esso risulti allineato con gli indicatori di formato sulla parte superiore (38) e inferiore (37) del cassetto.
4. Ruotare la leva frontale di blocco (35) di 90°, per bloccarla.
5. Spostare il cursore posteriore del deck (39) allo stesso modo.

6. Rilasciare il gancio (40) e rimuovere il cursore del bordo di uscita del deck (41).

---

3. 移动堆纸板前部游标 (36)，使供纸盒下部的尺寸标记 (37) 与供纸盒上部的尺寸标记 (38) 对齐。
4. 将前部锁定杆 (35) 旋转 90° 以固定。
5. 按同样方式移动后部堆纸板后部游标 (39)。

6. 解除挂钩 （40），拆下堆纸板后部游标 (41)。

---

3. 카세트 밑의 크기표시 (37) 와 카세트 위의 크기 표시 (38) 에 맞춰 데크커서 앞 (36) 을 이동시킵니다 .
4. 잠금레버 앞 (35) 을 90° 회전시켜 고정합니다 .
5. 똑같이 데크커서 뒤 (39) 를 이동시킵니다 .

6. 후크 (40) 를 해제하고 데크 뒷단커서 (41) 를 제거합니다 .

---

3. カセット下のサイズ表示 (37) とカセット上のサイズ表示 (38) に合わせてデッキカーソル前 (36) を移動させる。
4. ロックレバー前 (35) を 90° 回転させ固定する。
5. 同様にデッキカーソル後 (39) を移動させる。

6. フック (40) を解除し、デッキ後端カーソル (41) を取り外す。

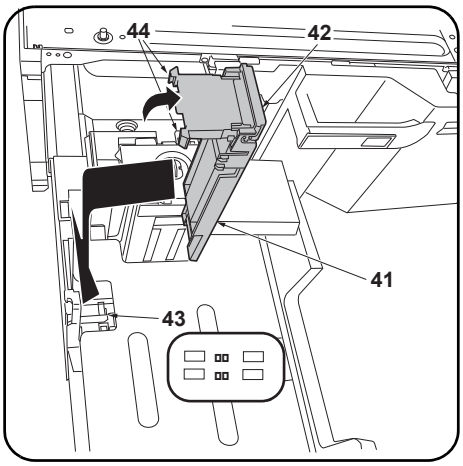

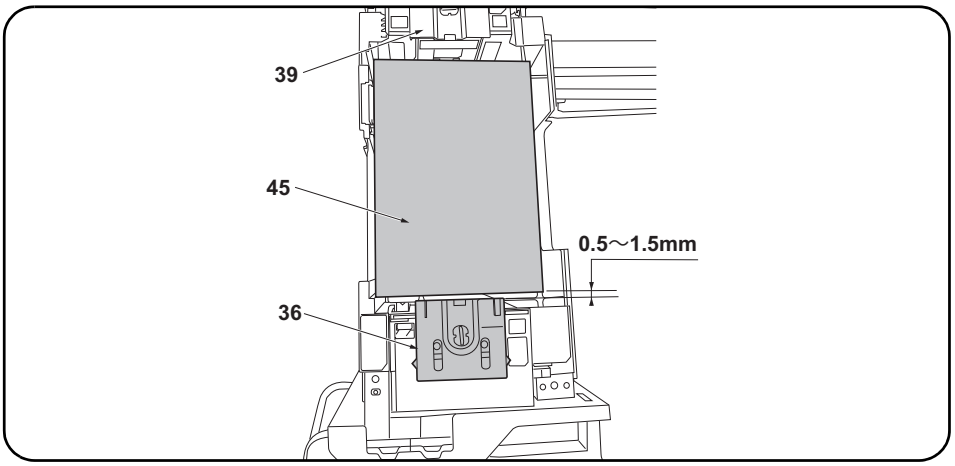

7. Lift up the sub-cursor (42).
8. Align with the size indicator (43), engage the hook (44) and install the deck trailing edge cursor (41).

Adjusting the cursor width

1. Load paper in the cassettes.
2. If the gap between the front deck cursor (36) and the paper (45) is outside the 0.5 to 1.5 mm range when the paper (45) is touching up against the rear deck cursor (39), perform the following adjustment.
* A cursor width that is too small can hinder paper feeding, while a cursor width that is too large can lead to problems such as skewed paper feed.

---

7. Lever le curseur secondaire (42).
8. Aligner avec l'indicateur de format (43), engager le crochet (44) et reposer le curseur du bord arrière de la platine (41).

Réglage de la largeur du curseur

1. Charger les tiroirs en papier.
2. Si l'écartement entre le curseur de platine avant (36) et le papier (45) est hors des limites de 0,5 à 1,5 mm quand le papier (45) touche le curseur de platine arrière (39), procéder au réglage suivant.
* Une largeur trop faible du curseur risque d'empêcher l'entraînement du papier et une largeur trop grande risque d'entraîner des problèmes du type entraînement du papier de biais.

---

7. Levante el cursor secundario (42).
8. Alinee con el indicador de tamaño (43), enganche el gancho (44) e instale el cursor del borde inferior de la plataforma. (41).

Cómo ajustar la anchura del cursor

1. Cargue papel en los cajones.
2. Si la separación entre el cursor frontal de la plataforma (36) y el papel (45) está fuera del rango de 0,5 a 1,5 mm cuando el papel (45) toca el cursor trasero de la plataforma (39), haga el siguiente ajuste.
* Una anchura del cursor demasiado pequeña puede impedir la alimentación de papel; una anchura del cursor demasiado grande puede provocar problemas con la alimentación torcida de papel.

---

7. Den Unter-Cursor (42) anheben.
8. Auf die Formatanzeige (43) ausrichten, den Haken (44) einsetzen und den Hinterkante-Cursor (41) der Konsole anbringen.

Einstellen der Cursor-Breite

1. Papier in die Papierladen einlegen.
2. Falls der Abstand zwischen dem vorderen Konsole-Cursor (36) und dem Papier (45) außerhalb des Bereichs 0,5 bis 1,5 mm liegt, wenn das Papier (45) am hinteren Konsole-Cursor (39) anliegt, ist folgende Einstellung vorzunehmen.
* Eine zu kleine Cursor-Breite kann den Papiereinzug behindern, wogegen eine zu große Cursor-Breite verkanteten Papiereinzug und ähnliche Probleme verursachen kann.

---

7. Sollevare il cursore secondario (42).
8. Allineare con l'indicatore formato (43), fissare il gancio (44) e installare il cursore del bordo di uscita del deck (41).

Regolazione della larghezza del cursore

1. Caricare carta nei cassetti.
2. Se lo spazio tra il cursore frontale del deck (36) e la carta (45) è fuori della gamma da 0,5 a 1,5 mm quando la carta (45) tocca il cursore postertiore del deck (39), eseguire la regolazione seguente.
* Una larghezza dei cursori troppo piccola può ostacolare l'alimentazione della carta, mentre unalarghezza dei cursori troppo grande può essere causa di problemi, come ad esempio l'alimentazione obbliqua della carta.

---

7. 抬起副游标 (42)。
8. 对齐尺寸标记 (43)，将挂钩 (44) 嵌入以安装堆纸板后部游标 (41)。

游标宽度的调节

1. 在供纸盒中装入纸张。
2. 在堆纸板后部游标 (39) 与纸张 (45) 接触的状态下，如果堆纸板前部游标 (36) 与纸张 (45) 的间隙超出了 0.5 ～ 1.5㎜ 的范围，须进行以下调节。
※ 如果游标宽度过小，可能造成不供纸，游标宽度过大，则可能发生歪斜进纸等情况。

---

7. 서브커서 (42) 를 세웁니다 .
8. 크기표시 (43) 에 맞춰 후크 (44) 를 판벽데크 후단커서 (41) 를 부착합니다 .

커서 폭 조정

1. 카세트에 용지를 장착합니다 .
2. 데크커서 뒤 (39) 에 용지 (45) 가 접하고 있는 상태에서 데크커서 앞 (36) 과 용지 (45) 의 틈이 0.5 ~ 1.5mm 의 범위외의 경우에는 이하의 조정을 합니다 .
※ 커서 폭이 작으면 무급지 , 커서 폭이 크면 경사급지 등이 발생할 가능성이 있습니다 .

---

7. サブカーソル (42) を起こす。
8. サイズ表示 (43) に合わせて、フック (44) をはめデッキ後端カーソル (41) を取り付ける。

カーソル幅の調整

1. カセットに用紙をセットする。
2. デッキカーソル後 (39) に用紙 (45) が接している状態で、デッキカーソル前 (36) と用紙 (45) の隙間が 0.5 ～ 1.5㎜ の範囲外の場合は、以下の調整をおこなう。
※ カーソル幅が小さいと無給紙、カーソル幅が大きいと斜め給紙などが発生する可能性がある。

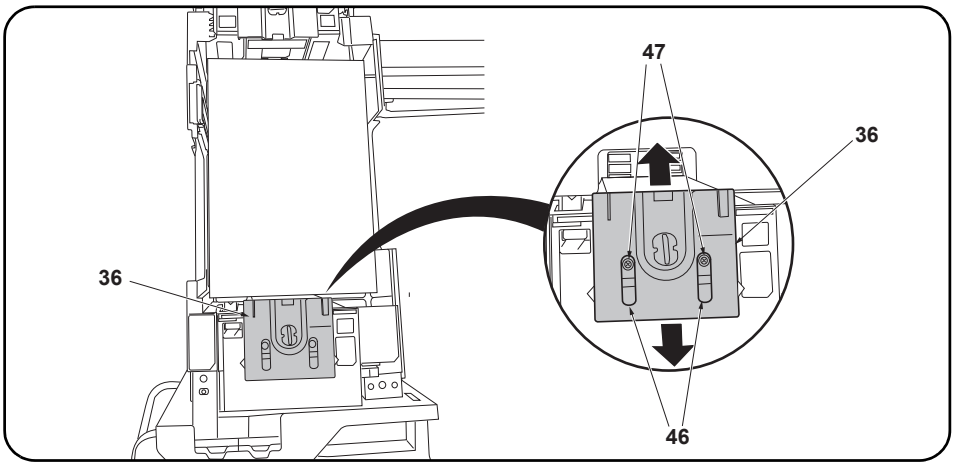

3. Insert a Philips-head screwdriver into the 2 long slots (46) in the front deck cursor (36) and loosen the 2 adjusting screws (47). Then move the front deck cursor (36).

4. Retighten the 2 adjusting screws (47).
5. Check that the gap between the front deck cursor (36) and the paper is between 0.5 and 1.5 mm.

---

3. Insérer un tournevis cruciforme dans les 2 longues fentes (46) du curseur de platine avant (36) et desserrer les 2 vis de réglage (47). Déplacer ensuite le curseur de platine avant (36).

4. Resserrer les 2 vis de réglage (47).
5. Vérifier que l'écartement entre le curseur de platine avant (36) et le papier est entre 0,5 et 1,5 mm.

---

3. Inserte un destornillador de cabeza Philips en las dos ranuras largas (46) en el cursor frontal de la plataforma (36) y afloje los 2 tornillos de ajuste (47). Después, mueva el cursor frontal de la plataforma (36).

4. Vuelva a apretar los 2 tornillos de ajuste (47).
5. Verifique que la separación entre el cursor frontal de la plataforma (36) y el papel sea de entre 0,5 y 1,5 mm.

---

3. Einen Kreuzschlitzschraubendreher in die 2 langen Öffnungen (46) im vorderen Konsole-Cursor (36) stecken und die 2 Einstellschrauben (47) lösen. Danach den vorderen Konsole-Cursor (36) verschieben.

4. Die 2 Einstellschrauben (47) wieder anziehen.
5. Vergewissern Sie sich, dass der Abstand zwischen dem vorderen Konsole-Cursor (36) und dem Papier im Bereich 0,5 bis 1,5 mm liegt.

---

3. Inserire un cacciavite con testa a croce tipo Philips nelle 2 fessure lunghe (46) nel cursore frontale del deck (36) e allentare le 2 viti di regolazione (47). Quindi spostare il cursore frontale del deck (36).

4. Ristringere le 2 viti di regolazione (47).
5. Controllare che lo spazio tra il cursore frontale del deck (36) e la carta sia compreso nella gamma tra 0,5 e 1,5 mm.

---

3. 将十字螺丝刀从堆纸板前部游标 (36) 的 2 处长孔 (46) 处插入，拧松 2 颗调节螺丝 (47)，移动堆纸板前部游标 (36)。

4. 拧紧 2 颗调节螺丝 (47)。
5. 确认堆纸板前部游标 (36) 与纸张的间隙在 0.5 ～ 1.5㎜ 的范围内。

---

3. 데크커서 앞 (36) 2 곳의 긴 구멍 (46) 에서 플러스 드라이버를 넣어 조정나사 (47) 2 개를 느슨하게 하고 데크커서 앞 (46) 을 이동시킵니다 .

4. 조정나사 (47) 2 개를 조입니다 .
5. 데크커서 앞 (36) 과 용지의 틈이 0.5 ~ 1.5 mm 범위내가 되어 있는 것을 확인합니다 .

---

3. デッキカーソル前 (36) の 2 箇所の長穴 (46) からプラスドライバー挿入し、調整ビス (47)2 本を緩め、デッキカーソル前 (36) を移動させる。

4. 調整ビス (47)2 本を締め付ける。
5. デッキカーソル前 (36) と用紙の隙間が 0.5 ～ 1.5㎜ の範囲内になっていることを確認する

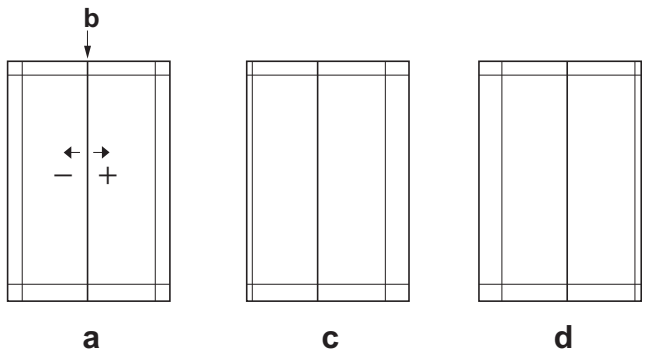

Adjusting the center line

The reference value for the center line is ±0.5 mm or less at position (b) in the correct image (a). If the center line position is outside this range, perform the following adjustment.

1. Set maintenance mode U034, select LSU Out Left and Cassette3 or Cassette4.
2. Adjust the values.
   Test pattern (c): Increase the setting value. Test pattern (d): Decrease the setting value.
3. Press the Start key to confirm the setting value.

Réglage de l'axe

La valeur de référence pour l'axe est de ±0,5 mm ou moins à la position (b) d'une image correcte (a). Si la position de l'axe est hors de cette plage, effectuez le réglage suivant.

1. Passer en mode maintenance U034, sélectionner LSU Out Left et Cassette3 ou Cassette4.
2. Régler les valeurs.
   Mire d' essai (c): Augmentez la valeur de réglage. Mire d' essai (d): Diminuez la valeur de réglage.
3. Appuyer sur la touche de Start pour confirmer la valeur de réglage.

Ajuste de la línea central

El valor de referencia de la línea central es de ±0,5 mm o menor, en la posición (b) de la imagen correcta (a). Si la posición de la línea central estuviera fuera de este rango, haga el siguiente ajuste.

1. Entre al modo de mantenimiento U034, seleccione LSU Out Left y Cassette3 o Cassette4.
2. Ajuste los valores.
   Patrón de prueba (c): Aumente el valor de configuración. Patrón de prueba (d): Reduzca el valor de configuración.
3. Pulse la tecla de Start para confirmar el valor de configuración.

Einstellen der Mittenlinie

Der Bezugswert für die Mittenlinie ist ±0,5 mm oder weniger an Position (b) des korrekten Bilds (a). Falls die Mittenlinie außerhalb dieses Bereichs liegt, ist folgende Einstellung vorzunehmen.

1. Schalten Sie in den Wartungsmodus U034, wählen Sie LSU Out Left und Cassette3 oder Cassette4.
2. Die Werte einstellen.
   Testmuster (c): Den Einstellwert erhöhen. Testmuster (d): Den Einstellwert verringern.
3. Den Einstellwert durch Drücken der Start-Taste bestätigen.

Regolazione della linea centrale

Il valore di riferimento per la linea centrale è ±0,5 mm o inferiore alla posizione (b) nell'immagine corretta (a). Se la posizione della linea centrale è all'infuori di questa gamma, effettuare la regolazione seguente.

1. Impostare la modalità manutenzione U034, selezionare LSU Out Left e Cassette3 o Cassette4.
2. Regolare i valori.
   Modello di prova (c): Aumentare il valore dell'impostazione. Modello di prova (d): Diminuire il valore dell'impostazione.
3. Premere il tasto di Start per confermare il valore dell'impostazione.

中心线调节

中心线的基准值在矫正图像 (a) 的 (b) 位置为 ±0.5mm 以内。超出该范围时，须进行以下调节。

1. 设置维护模式 U034，选择 LSU Out Left、Cassette3 或 Cassette4。
2. 调整设定值。
   测试图案 (c)：调高设定值。 测试图案 (d)：调低设定值。
3. 按 Start 键，以确定设定值。

센터라인 조정

센터라인은 적정화상 (a) 의 (b) 위치에서 기준치는 ±0.5mm 이내 . 여기에서 벗어나는 것은 이하의 조정을 합니다 .

1. 메인터넌스 모드 U034 를 세트하고 LSU Out Left, Cassette3 또는 Cassette4 를 선택합니다 .
2. 설정치를 조정합니다 .
   테트스 패턴 (c) :설정치를 높입니다 . 테스트 패턴 (d) :설정치를 내립니다 .
3. 시작키를 누르고 설정치를 확인합니다 .

センターライン調整

センターラインは、適正画像 (a) の (b) の位置で基準値は ±0.5mm 以内。これから外れるときは以下の調整をおこなう。

1. メンテナンスモード U034 をセットし、LSU Out Left、Cassette3 または Cassette4 を選択する。
2. 設定値を調整する。
   テストパターン (c) :設定値を上げる。 テストパターン (d) :設定値を下げる。
3. スタートキーを押し、設定値を確定する。

303NF5673001

2013. 1
303NF56730-01

INSTALLATION GUIDE FOR SIDE DECK

INSTALLATION GUIDE

GUIDE D’INSTALLATION

GUÍA DE INSTALACION

INSTALLATIONSANLEITUNG

GUIDA ALL’INSTALLAZIONE

安装手册

설치안내서

設置手順書

PF-770

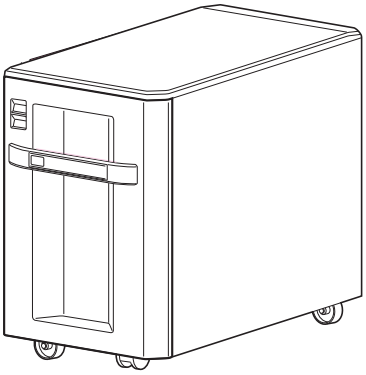

English

References to medium-speed MFPs in this document denote 30/30, 35/35, 45/45 and 55/50 ppm color machines, and 35, 45 and 55 ppm monochrome machines.
References to high-speed MFPs in this document denote 65/65 and 75/70 ppm color machines, and 65 and 80 ppm monochrome machines.

Français

Dans le présent document, les références aux MFP à vitesse moyenne renvoient aux machines couleurs 30/30, 35/35, 45/45 et 55/50 ppm et aux machines monochromes 35, 45 et 55 ppm.
Dans le présent document, les références aux MFP à grande vitesse renvoient aux machines couleurs 65/65 et 75/70 ppm et aux machines monochromes 65 et 80 ppm.

Español

Las referencias a las MFP de velocidad media de este documento corresponden a las máquinas a color de 30/30, 35/35, 45/45 y 55/50 ppm y a las máquinas monocromáticas de 35, 45 y 55 ppm.
Las referencias a las MFP de alta velocidad de este documento corresponden a las máquinas a color de 65/65 y 75/70 ppm y a las máquinas monocromáticas de 65 y 80 ppm.

Deutsch

Angaben für MFP der mittleren Leistungsklasse in dieser Anleitung gelten für die 30/30, 35/35, 45/45 und 55/50 ppm Vollfarbenkopierer sowie für die 35, 45 und 55 ppm Monochrommaschinen.
Angaben für MFP der Hochleistungsklasse in dieser Anleitung gelten für die 65/65 und 75/70 ppm Vollfarbenkopierer sowie für die 65 und 80 ppm Monochrommaschinen.

Italiano

I riferimenti per le MFP a velocità media riportati in questo documento indicano le macchine a colori 30/30, 35/35, 45/45 e 55/50 ppm, e le macchine monocromatiche 35, 45 e 55 ppm.
I riferimenti per le MFP a velocità alta riportati in questo documento indicano le macchine a colori 65/65 e 75/70 ppm, e le macchine monocromatiche 65 e 80 ppm.

简体中文

本文中的中速 MFP 代表彩色 30/30 页机型、35/35 页机型、45/45 页机型、55/50 页机型、黑白 35 页机型、45 页机型、55 页机型。
本文中的高速 MFP 代表彩色 65/65 页机型、75/70 页机型、黑白 65 页机型、80 页机型。

한국어

본문 중 중속 MFP 는 컬러 30/30 매기 , 35/35 매기 , 45/45 매기 , 55/50 매기 , 흑백 35 매기 , 45 매기 , 55 매기를 나타냅니다 .
본문 중 고속 MFP 는 컬러 65/65 매기 , 75/70 매기 , 흑백 65 매기 , 80 매기를 나타냅니다 .

日本語

本文中の中速 MFP はカラー機の 30/30 枚機、35/35 枚機、45/45 枚機、55/50 枚機、モノクロ機の 35 枚機、45 枚機、55 枚機を表す。
本文中の高速 MFP はカラー機の 65/65 枚機、75/70 枚機、モノクロ機の 65 枚機、80 枚機を表す。

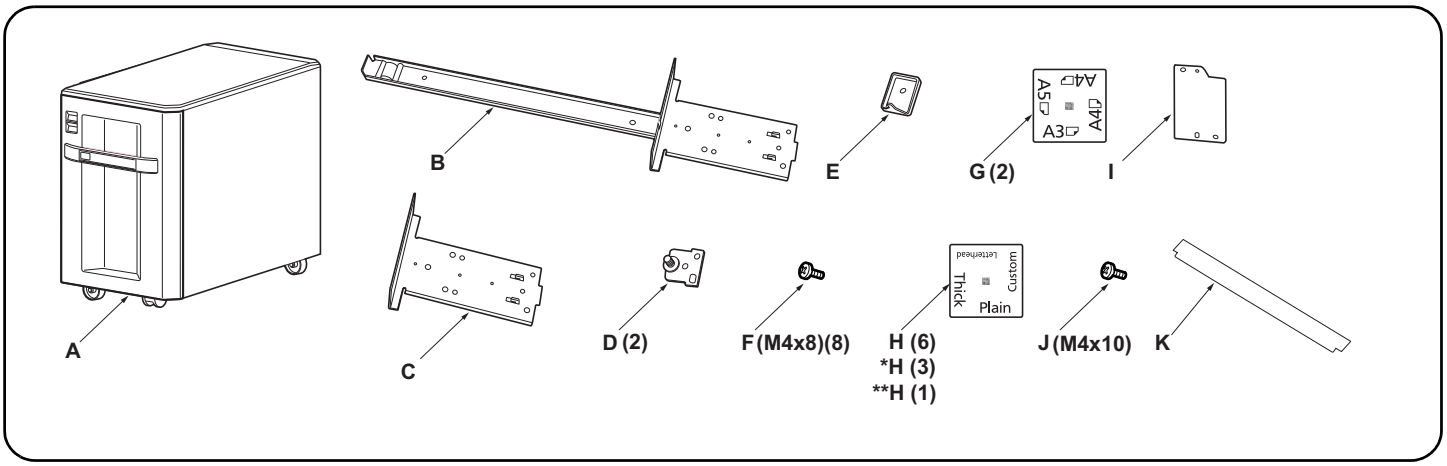

Supplied parts

A. Side feeder 1
B. Large base slider 1
C. Small base slider 1
D. Lock pin 2
E. Switch press plate 1
F. M4 × 8 screw 8
G. Paper size plate 2
H. Media type plate(except for 120V model) .. 6
***H.** Media type plate(120V model only) 3
I. Cover plate 1
J. M4 × 10 tapping screw 1
K. Film 1

Be sure to remove any tape and/or cushioning material from supplied parts.

Pièces fournies

A. Plateau d'alimentation latéral 1
B. Grande règle de base 1
C. Petite règle de base 1
D. Broche de verrouillage 2
E. Plaque de pression de l'interrupteur 1
F. Vis M4 × 8 8
G. Plaquette du format de papier 2
H. Plaquette du type de support 6
I. Capot 1
J. Vis de connexion M4 × 10 1
K. Film 1

Veillez à retirer les morceaux de bande adhésive et/ou les matériaux de rembourrage des pièces fournies.

Partes suministradas

A. Alimentador lateral 1
B. Deslizador de base grande 1
C. Deslizador de base pequeño 1
D. Clavija de bloqueo 2
E. Placa de presión del interruptor 1
F. Tornillo M4 × 8 8
G. Placa de tamaño de papel 2
H. Placa de tipo de medio 6
I. Tapa 1
J. Tornillo de roscado M4 × 10 1
K. Película 1

Asegúrese de despegar todas las cintas y/o material amortiguador de las partes suministradas.

Gelieferte Teile

A. Seitlicher Einzug 1
B. Großer Basis-Schieber 1
C. Kleiner Basis-Schieber 1
D. Arretierstift 2
E. Schalterdruckplatte 1
F. M4 × 8 Schraube 8
G. Papierformatkarte 2
H. Medientypkarte 6
I. Abdeckplatte 1
J. M4 × 10 Schneidschraube 1
K. Film 1

Entfernen Sie Klebeband und/oder Dämpfungsmaterial vollständig von den mitgelieferten Teilen.

Parti di fornitura

A. Unità di alimentazione laterale 1
B. Scivolo di base grande 1
C. Scivolo di base piccolo 1
D. Perno di bloccaggio 2
E. Piastra spingi interruttore 1
F. Vite M4 × 8 8
G. Piastra formato carta 2
H. Piastra tipo carta 6
I. Coperchio 1
J. Vite autofilettante M4 × 10 1
K. Pellicola 1

Accertarsi di rimuovere tutti i nastri adesivi e/o il materiale di imbottitura dalle parti fornite.

附属品

A. 侧供纸盒 1
B. 底座滑板（大）..... 1
C. 底座滑板（小）..... 1
D. 锁定插销 2
E. 开关挡板 1
F. M4×8 螺丝 8
G. 纸张尺寸标示 2
**H. 纸张种类标示 1
I. 盖板 1
J. M4×10 自攻螺丝 1
K. 胶片 1

如果附属品上带有固定胶带，缓冲材料时务必揭下。

동봉품

A. 사이드피더 1
B. 베이스 슬라이더 대 1
C. 베이스 슬라이더 소 1
D. 잠금 핀 2
E. 스위치 판 1
F. 나사 M4×8 8
G. 용지크기 플레이트 2
**H. 용지종류 플레이트 1
I. 커버 플레이트 1
J. 탑핑 나사 M4×10 1
K. 필름 1

동봉품에 고정 테이프 , 완충재가 붙어 있는 경우에는 반드시 제거할 것 .

同梱品

A. サイドフィーダー 1
B. ベーススライダー大 1
C. ベーススライダー小 1
D. ロックピン 2
E. スイッチ当たり板 1
F. ビス M4×8 8
G. 用紙サイズプレート 2
**H. 用紙種類プレート 1
I. カバープレート 1
J. タッピングビス M4×10 1
K. フィルム 1

同梱品に固定テープ、緩衝材がついている場合は、必ず取り外すこと。

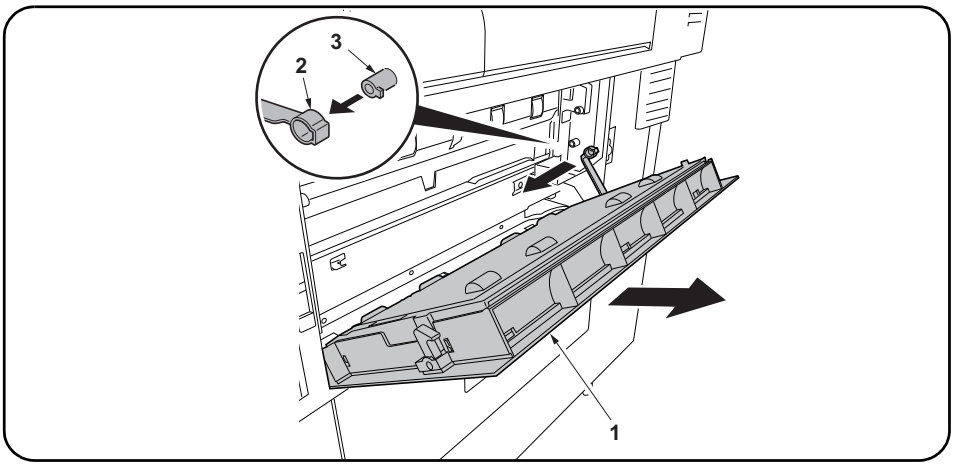

Procedure
Be sure to turn the MFP main power switch off and disconnect the MFP power plug from the wall outlet before starting to install the side feeder.

Installation on medium-speed MFPs
If installing on a high-speed MFP, proceed to step 10.
1. Open the lower right cover (1) on the MFP.
Remove the strap (2) from the shaft (3) and remove lower right cover (1).

Procédure
Veiller à bien mettre l'interrupteur principal du MFP hors tension et à débrancher la fiche d'alimentation du MFP de la prise murale avant de commencer l'installation du plateau d'alimentation latéral.

Montage sur des MFP à vitesse moyenne
Si le montage est fait sur un MFP à grande vitesse, passer à l'étape 10.
1. Ouvrir le couvercle inférieur droit (1) du MFP.
Déposer la courroie (2) de l'arbre (3) et déposer le couvercle inférieur droit (1).

Procedimiento
Asegúrese de apagar el interruptor principal del MFP y de desconectar el enchufe del MFP del receptáculo de pared antes de empezar a instalar el alimentador lateral.

Instalación en las MFP de velocidad media
Si se instala en una MFP de alta velocidad, vaya al paso 10.
1. Abra la cubierta frontal inferior (1) del MFP.
Quite la correa (2) del eje (3) y quite la cubierta frontal inferior (1).

Verfahren
Schalten Sie unbedingt den Hauptschalter des MFP aus, und ziehen Sie den Netzstecker des MFP von der Netzsteckdose ab, bevor Sie mit der Installation des seitlichen Einzugs beginnen.

Installation an MFP der mittleren Leistungsklasse
Gehen Sie zur Installation an einem MFP der Hochleistungsklasse weiter zu Schritt 10.
1. Die untere rechte Abdeckung (1) am MFP öffnen.
Den Riemen (2) von der Welle (3) abnehmen und dann die untere rechte Abdeckung (1) abnehmen.

Procedura
Prima di iniziare la procedura di installazione dell'unità di alimentazione laterale, assicurarsi di spegnere l'interruttore principale di alimentazione dell'MFP, e di scollegare la spina del cavo di alimentazione dalla presa elettrica a muro.

Installazione sulle MFP a velocità media
Se si installa su una MFP a velocità alta, procedere al passo 10.
1. Aprire il coperchio destro inferiore (1) sull'MFP.
Rimuovere la cinghietta (2) dall'asta (3) e quindi rimuovere il coperchio destro inferiore (1).

安装步骤
安装侧供纸盒时，必须先关闭 MFP 主机上的主电源开关，并拔出电源插头后方可进行工作。

安装于中速 MFP 上时
安装于高速 MFP 上时，进至步骤 10。
1. 打开 MFP 主机的右下部盖板 (1)。
将带子 (2) 从轴 (3) 上拆除，拆下右下部盖板 (1)。

설치순서
사이드피더를 설치할 때에는 반드시 MFP 본체의 주전원 스위치를 OFF 로 하고 전원 프러그를 뺀 후 작업을 할 것 .

중속 MFP 에 설치하는 경우
고속 MFP 에 설치하는 경우에는 순서 10 로 진행합니다 .
1. MFP 본체의 오른쪽 아래 커버 (1) 를 엽니다 .
스트라프 (2) 를 축 (3) 에서 떼어내 오른쪽 아래 커버 (1) 를 제거합니다 .

取付手順
サイドフィーダーを設置するときは、必ず MFP 本体の主電源スイッチを OFF にし、電源プラグを抜いてから作業すること。

中速 MFP に設置の場合
高速 MFP に設置の場合は手順 10 に進む。
1. MFP 本体の右下カバー(1) を開く。
ストラップ (2) を軸 (3) から外し、右下カバー(1) を取り外す。

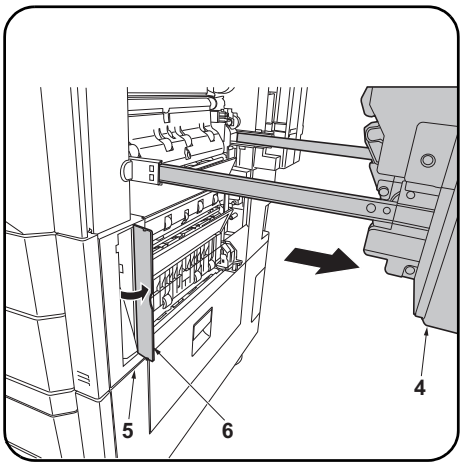

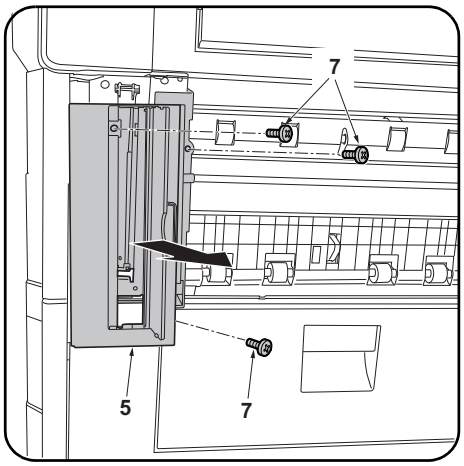

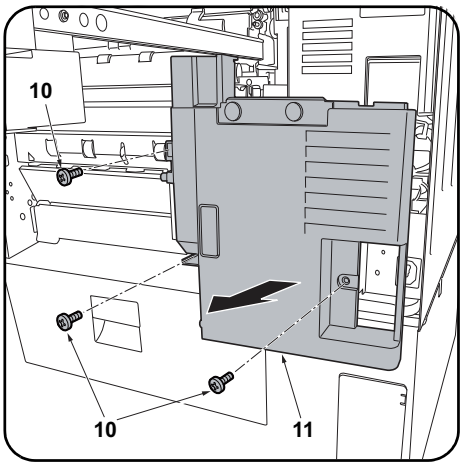

2. Open the MFP paper conveying cover (4).
3. Open the panel (6) on the MFP front right cover (5).

4. Remove 3 screws (7) and remove the front right cover (5).

5. Remove 3 screws (10). Remove the lower right rear cover (11).

---

2. Ouvrir le capot du transport du papier du MFP (4).
3. Ouvrir le panneau (6) sur le capot avant droit du MFP (5).

4. Déposer les 3 vis (7) et déposer le capot avant droit (5).

5. Déposer les 3 vis (10). Déposer le capot arrière droit inférieur (11).

---

2. Abra la cubierta de transporte del papel del MFP (4).
3. Abra el panel (6) en la cubierta delantera derecha (5).

4. Quite los 3 tornillos (7) y quite la cubierta delantera derecha (5).

5. Quite los 3 tornillos (10). Quite la cubierta trasera inferior derecha (11).

---

2. Öffnen Sie die Papierförderabdeckung (4) des MFP.
3. Öffnen Sie die Platte (6) der vorderen rechten Abdeckung (5) des MFP.

4. Entfernen Sie 3 Schrauben (7) und nehmen Sie die vordere rechte Abdeckung (5) ab.

5. Entfernen Sie 3 Schrauben (10). Nehmen Sie die untere rechte hintere Abdeckung (11) ab.

---

2. Aprire il coperchio (4) dell'unità di trasporto carta dell'MFP.
3. Aprire il pannello (6) sul coperchio destro anteriore (5) dell'MFP.

4. Rimuovere le 3 viti (7), e quindi rimuovere il coperchio destro posteriore (5).

5. Rimuovere le 3 viti (10). Rimuovere il coperchio posteriore inferiore destro (11).

---

2. 打开 MFP 主机的供纸盖板 (4)。
3. 打开 MFP 主机的右前部盖板 (5) 的盖子 (6)。

4. 拆除 3 颗螺丝 (7)，拆下右前部盖板 (5)。

5. 拆除 3 颗螺丝 (10)。 拆下右下后部盖板 (11)。

---

2. MFP 본체의 반송커버 (4) 를 엽니다 .
3. MFP 본체의 우측 전면커버 (5) 의 뚜껑 (6) 을 엽니다 .

4. 나사 (7) 3 개를 제거하고 우측 전면커버 (5) 를 떼어 냅니다 .

5. 나사 (10) 3 개를 제거합니다 . 우측 하단 뒷커버 (11) 를 제거합니다 .

---

2. MFP 本体の搬送カバー(4) を開く。
3. MFP 本体の右前カバー(5) のふた (6) を開く。

4. ビス (7)3 本を外し、右前カバー(5) を取り外す。

5. ビス (10)3 本を外す。右下後カバー(11) を取り外す。

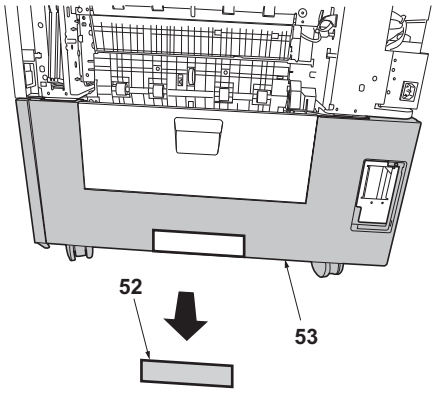

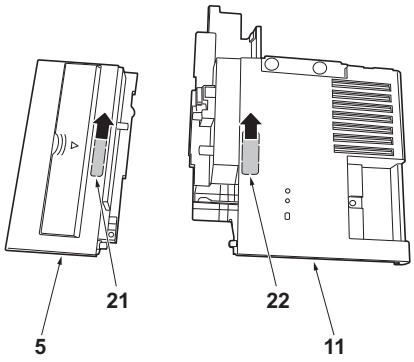

6. Remove the breakaway cover (52) from the paper feeder lower right cover (53).

7. Remove the breakaway cover (21) from the front right cover (5) and the breakaway cover (22) from the lower right rear cover (11).

---

6. Retirez le capot détachable (52) du capot inférieur droit du chargeur de papier (53).

7. Déposer le couvercle amovible (21) du capot avant droit (5) et le couvercle amovible (22) du capot arrière inférieur droit (11).

---

6. Quite la cubierta de separación (52) de la cubierta inferior derecha del depósito de papel (53).

7. Quite la cubierta divisoria (21) de la cubierta delantera derecha (5) y la cubierta divisoria (22) de la cubierta trasera inferior derecha (11).

---

6. Nehmen Sie die Ablösungsabdeckung (52) von der untere rechte Abdeckung (53) des Papiereinzugs ab.

7. Nehmen Sie die Ablösungsabdeckung (21) von der vorderen rechten Abdeckung (5) ab und die Ablösungsabdeckung (22) von der unteren rechten hinteren Abdeckung (11).

---

6. Rimuovere il coperchio di distacco (52) dal coperchio destro inferiore (53) dell'unità di alimentazione carta.

7. Rimuovere il coperchio di distacco (21) dal coperchio destro anteriore (5), e il coperchio di distacco (22) dal coperchio posteriore inferiore destro (11).

---

6. 去除供纸盒的右下部盖板（53）上的可去除部（52）。

7. 切除右前部盖板（5）的切割盖板（21）和右下后部盖板（11）的切割盖板（22）。

---

6. 용지 급지대의 우측 하단커버 (53) 의 분할커버부 (52) 를 떼어 냅니다 .

7. 우측 전면커버 (5) 의 분할커버 (21) 와 오른쪽 하단 뒷커버 (11) 의 분할커버 (22) 를 떼어 냅니다 .

---

6. ペーパーフィーダーの右下カバー（53）の割りカバー部（52）を切り取る。

7. 右前カバー(5) の割りカバー(21) と右下後カバー(11) の割りカバー(22) を切り取る。

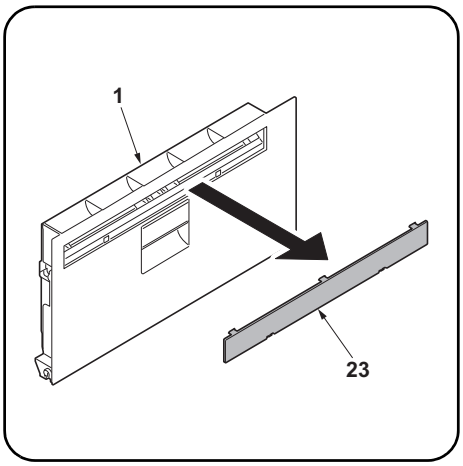

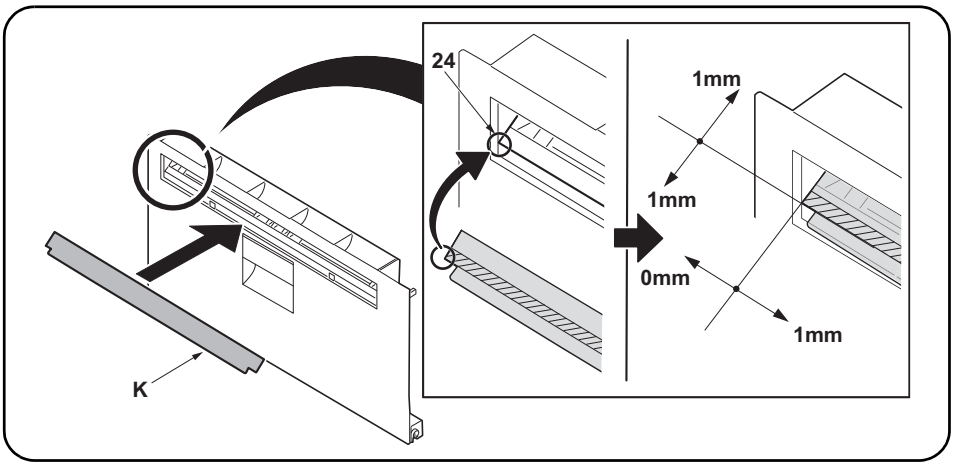

8. Remove the panel (23) from the MFP lower right cover (1) with a flat blade screwdriver.

9. After using alcohol to clean place adhering the film, adhere the film (K) in the position (24) indicated in the illustration.
Proceed to step 21

---

8. Déposer le panneau (23) du capot inférieur droit du MFP (1) en procédant à l'aide d'un tournevis à lame.

9. Coller le film (K) sur l'emplacement (24) indiqué dans l'illustration, après avoir soigneusement nettoyé cet emplacement à l'alcool.
Passer à l'étape 21.

---

8. Extraiga el panel (23) de la cubierta derecha inferior del MFP (1) con un destornillador de pala plana.

9. Después de utilizar alcohol para limpiar la zona donde se va a pegar la película, pegue la película (K) en el lugar (24) que se indica en la ilustración.
Vaya al paso 21.

---

8. Nehmen Sie mit einem flachen Schraubendreher die Platte (23) von der unteren rechten Abdeckung (1) des MFP ab.

9. Zum Anbringen des Films (K) die Stelle zuvor mit Alkohol reinigen und den Film (K) dann in der in der Abbildung angegebenen Position (24) anbringen.
Gehen Sie weiter zu Schritt 21.

---

8. Rimuovere il pannello (23) dal coperchio destro inferiore (1) dell'MFP con un cacciavite a testa piana.

9. Dopo aver utilizzato alcol per pulire la piastra che aderisce alla pellicola, far aderire la pellicola (K) nella posizione (24) indicata nell'illustrazione.
Procedere al passo 21.

---

8. 使用一字螺丝刀将 MFP 主机的右下部盖板 (1) 的盖子 (23) 拆下。

9. 使用酒精对薄膜粘贴位置进行清洁后，按插图位置 (24) 粘贴薄膜（K）。
进至步骤 21。

---

8. MFP 본체의 우측 뒷커버 (1) 의 뚜껑 (23) 을 마이너스 드라이버로 제거합니다 .

9. 필름 부착위치를 알코올 청소 후 , 일러스트의 위치 (24) 에 맞춰 필름 (K) 을 부착합니다 .
순서 21 로 진행합니다 .

---

8. MFP 本体の右下カバー(1) のふた (23) をマイナスドライバーで取り外す。

9. フィルム貼り付け位置をアルコール清掃後、イラストの位置 (24) にあわせて、フィルム(K)を貼り付ける。
手順 21 に進む。

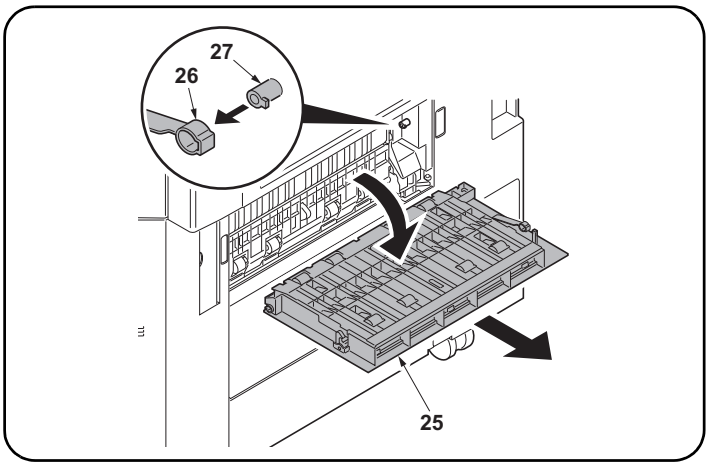

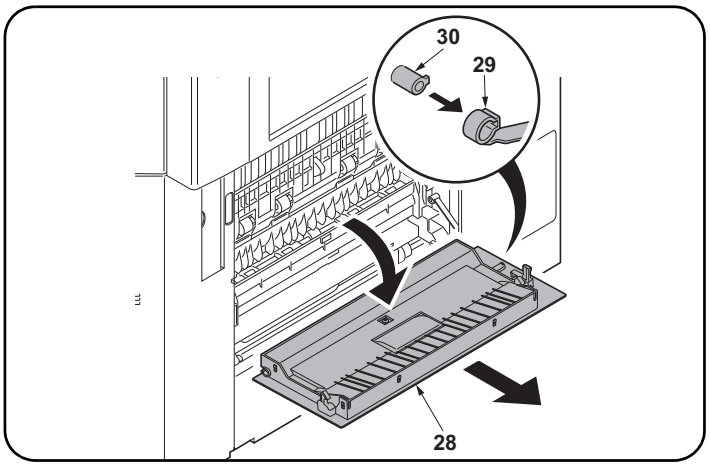

Installation on high-speed MFPs

10. Open the right cover 1 (25) on the MFP.
Remove the strap (26) from the shaft (27) and remove right cover 1 (25).

11. Open the right cover 2 (28) on the MFP.
Remove the strap (29) from the right cover shaft (30) and remove the right cover 2 (28).

Montage sur des MFP à grande vitesse

10. Ouvrir le capot droit 1 (25) du MFP.
Déposer la courroie (26) de l'arbre (27) et déposer le capot droit 1 (25).

11. Ouvrir le capot droit 2 (28) du MFP.
Déposer la courroie (29) de l'axe du capot droit (30) et déposer le capot droit 2 (28).

Instalación en las MFP de alta velocidad

10. Abra la cubierta derecha 1 (25) del MFP.
Quite la correa (26) del eje (27) y quite la cubierta derecha 1 (25).

11. Abra la cubierta derecha 2 (28) del MFP.
Quite la correa (29) del eje de la cubierta derecha (30) y quite la cubierta derecha 2 (28).

Installation an MFP der Hochleistungsklasse

10. Die rechte Abdeckung 1 (25) am MFP öffnen.
Den Riemen (26) von der Welle (27) abnehmen und dann die rechte Abdeckung 1 (25) abnehmen.

11. Die rechte Abdeckung 2 (28) am MFP öffnen.
Nehmen Sie den Riemen (29) von der Welle (30) der rechten Abdeckung und dann die rechte Abdeckung 2 (28) ab.

Installazione sulle MFP a velocità alta

10. Aprire il coperchio destro 1 (25) sull'MFP.
Rimuovere la cinghietta (26) dall'asta (27) e quindi rimuovere il coperchio destro 1 (25).

11. Aprire il coperchio destro 2 (28) sull'MFP.
Rimuovere la cinghietta (29) dall'asta (30) del coperchio destro e quindi rimuovere il coperchio destro 2 (28).

安装于高速 MFP 上时

10. 打开 MFP 主机的右部盖板 1(25)。
将带子 (26) 从轴 (27) 上拆除，拆下右部盖板 1(25)。

11. 打开 MFP 主机的右部盖板 2(28)。
从右盖板的轴 (30) 上拆除挂绳 (29)，拆下右盖板 2(28)。

고속 MFP 에 설치하는 경우

10. MFP 본체의 우측커버 1 (25) 를 엽니다 .
스트라프 (26) 를 축 (27) 에서 떼어내 우측커버 1 (25) 를 제거합니다 .

11. MFP 본체의 우측커버 2 (28) 를 엽니다 .
스트랩 (29) 을 우측커버의 축 (30) 에서 떼어내고 우측커버 2 (28) 를 제거합니다 .

高速 MFP に設置の場合

10. MFP 本体の右カバー1(25) を開く。
ストラップ (26) を軸 (27) から外し、右カバー1(25) を取り外す。

11. MFP 本体の右カバー2(28) を開く。
ストラップ (29) を右カバーの軸 (30) から外し、右カバー2(28) を取り外す。

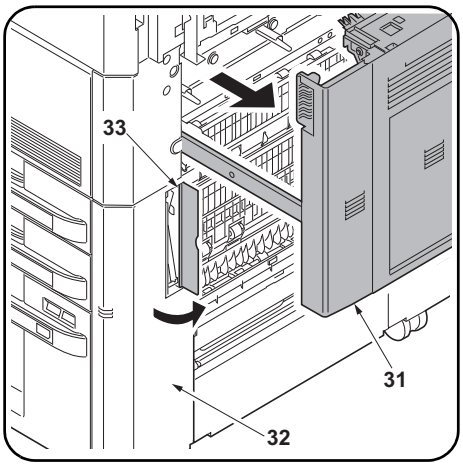

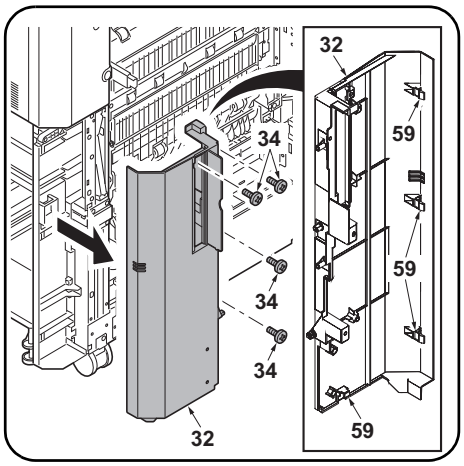

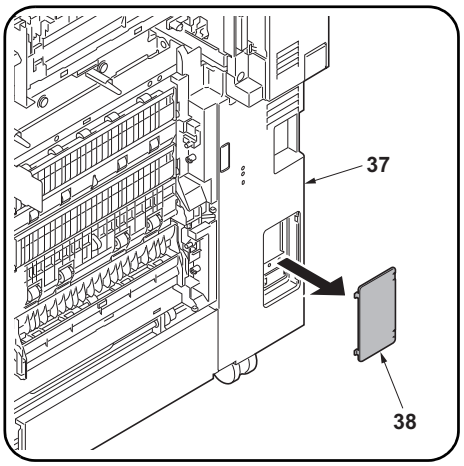

12. Open the MFP paper conveying cover (31).
13. Open the panel (33) on the MFP front right cover (32).

14. Remove the 4 screws (34) and release the 4 hooks (59). Then remove the front right cover (32).

15. Remove the panel (38) from the lower right rear cover (37) with a flat blade screwdriver.

---

12. Ouvrir le capot du transport du papier du MFP (31).
13. Ouvrir le panneau (33) sur le capot avant droit du MFP (32).

14. Retirer les 4 vis (34) et libérer les 4 crochets (59). Retirer ensuite le capot avant droit (32).

15. Déposer le panneau (38) du capot arrière inférieur droit (37) en procédant à l'aide d'un tournevis à lame.

---

12. Abra la cubierta de transporte del papel del MFP (31).
13. Abra el panel (33) en la cubierta delantera derecha (32).

14. Quite los 4 tornillos (34) y libere los 4 ganchos (59). Después, quite la cubierta frontal derecha (32).

15. Extraiga el panel (38) de la cubierta trasera inferior derecha (37) con un destornillador de pala plana.

---

12. Öffnen Sie die Papierförderabdeckung (31) des MFP.
13. Öffnen Sie die Platte (33) der vorderen rechten Abdeckung (32) des MFP.

14. Entfernen Sie die 4 Schrauben (34) und lösen Sie die 4 Haken (59). Danach nehmen Sie die rechte vordere Abdeckung (32) ab.

15. Nehmen Sie mit einem flachen Schraubendreher die Platte (38) von der unteren rechten hinteren Abdeckung (37) ab.

---

12. Aprire il coperchio (31) dell'unità di trasporto carta dell'MFP.
13. Aprire il pannello (33) sul coperchio destro anteriore (32) dell'MFP.

14. Rimuovere le 4 viti (34) e rilasciare i 4 ganci (59). Rimuovere quindi il coperchio anteriore destro (32).

15. Rimuovere il pannello (38) dal coperchio posteriore inferiore destro (37) con un cacciavite a testa piana.

---

12. 打开 MFP 主机的供纸盖板 (31)。
13. 打开 MFP 主机的右前部盖板 (32) 的盖子 (33)。

14. 卸下 4 颗螺丝（34）并松开 4 个卡扣（59）。然后卸下右前盖板（32）。

15. 用一字螺丝刀等取下右下盖板（37）的盖子（38）。

---

12. MFP 본체의 반송커버 (31) 를 엽니다 .
13. MFP 본체의 우측 전면커버 (32) 의 뚜껑 (33) 을 엽니다 .

14. 나사 (34) 4 개를 제거하고 후크 (59) 4 개를 풉니다 . 그런 다음 우측 전면 커버 (32) 를 제거합니다 .

15. 우측 아래뒷면 커버 (37) 의 뚜껑 (38) 을 마이너스 드라이버 등으로 풉니다 .

---

12. MFP 本体の搬送カバー(31) を開く。
13. MFP 本体の右前カバー(32) のふた (33) を開く。

14. ビス (34)4 本およびフック (59)4 箇所を外し､右前カバー(32) を取り外す。

15. 右下後カバー(37) のふた (38) をマイナスドライバーなどで取る。

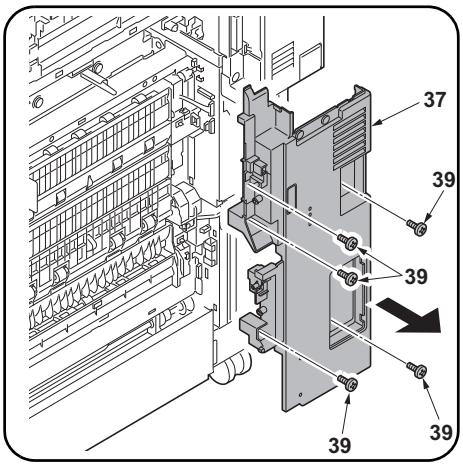

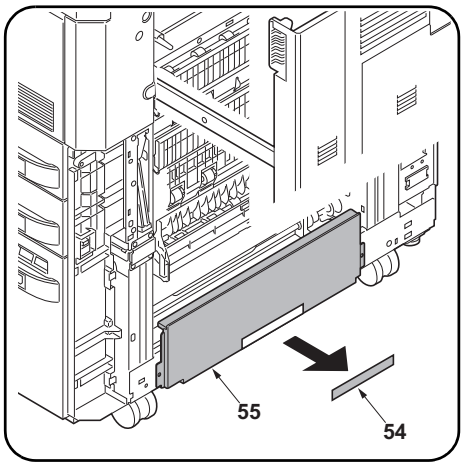

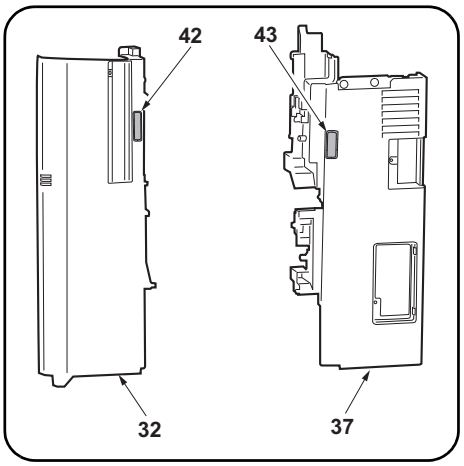

16. Remove 5 screws (39).Remove the lower right rear cover (37).

17. Remove the breakaway cover (54) from the lower right cover (55) .

18. Remove the breakaway cover (42) from the front right cover (32) and the breakaway cover (43) from the lower right rear cover (37).

---

16. Déposer les 5 vis (39). Déposer le capot arrière inférieur droit (37).

17. Retirez le capot détachable (54) du capot inférieur droit (55).

18. Déposer le couvercle amovible (42) du capot avant droit (32) et le couvercle amovible (43) du capot arrière inférieur droit (37).

---

16. Quite los 5 tornillos (39). Quite la cubierta trasera inferior derecha (37).

17. Quite la cubierta de separación (54) de la cubierta inferior derecha (55).

18. Quite la cubierta divisoria (42) de la cubierta delantera derecha (32) y la cubierta divisoria (43) de la cubierta trasera inferior derecha (37).

---

16. Entfernen Sie 5 Schrauben (39). Nehmen Sie die untere rechte hintere Abdeckung (37) ab.

17. Nehmen Sie die Ablösungsabdeckung (54) von untere rechte Abdeckung (55) ab.

18. Nehmen Sie die Ablösungsabdeckung (42) von der vorderen rechten Abdeckung (32) ab und die Ablösungsabdeckung (43) von der unteren rechten hinteren Abdeckung (37).

---

16. Rimuovere le 5 viti (39). Rimuovere il coperchio posteriore inferiore destro (37).

17. Rimuovere il coperchio di distacco (54) dal coperchio destro inferiore (55) .

18. Rimuovere il coperchio di distacco (42) dal coperchio destro anteriore (32), e il coperchio di distacco (43) dal coperchio posteriore inferiore destro (37).

---

16. 拆除 5 颗螺丝（39）。拆下右下后部盖板（37）。

17. 去除右下部盖板（55）上的可去除部（54）。

18. 切除右前部盖板（32）的切割盖板（42）和右下后部盖板（37）的切割盖板（43）。

---

16. 나사 (39) 5 개를 제거합니다 . 우측 하단 뒷커버 (37) 를 제거합니다 .

17. 우측 하단커버 (55) 의 분할커버부 (54) 를 떼어 냅니다 .

18. 우측 전면커버 (32) 의 분할커버 (42) 와 오른쪽 하단 뒷커버 (37) 의 분할커버 (43) 를 떼어 냅니다 .

---

16. ビス（39）5 本を外す。 右下後カバー（37）を取り外す。

17. 右下カバー（55）の割りカバー部（54）を切り取る。

18. 右前カバー（32）の割りカバー（42）と右下後カバー（37）の割りカバー（43）を切り取る。

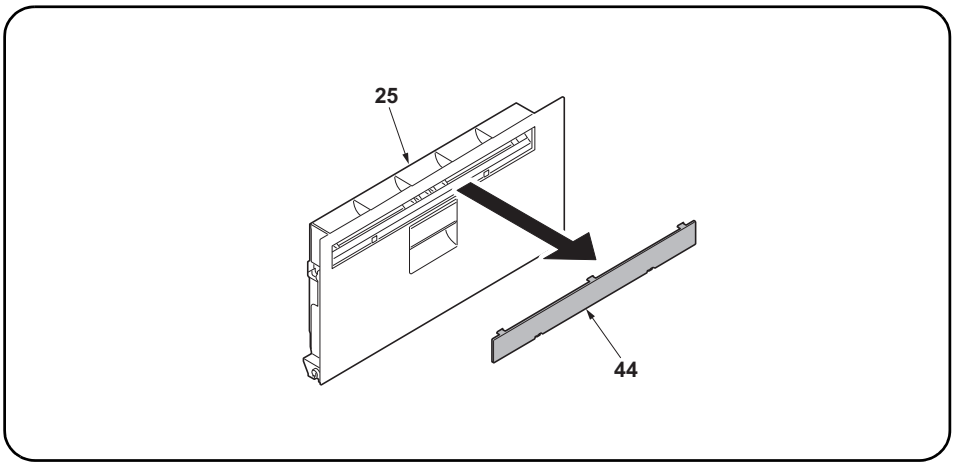

19. Remove the panel (44) from the MFP right cover 1 (25) with a flat blade screwdriver.

---

19. Déposer le panneau (44) du capot droit 1 du MFP (25) en procédant à l'aide d'un tournevis à lame.

---

19. Extraiga el panel (44) de la cubierta derecha 1 del MFP (25) con un destornillador de pala plana.

---

19. Nehmen Sie mit einem flachen Schraubendreher die Platte (44) von der rechten Abdeckung 1 (25) des MFP ab.

---

19. Rimuovere il pannello (44) dal coperchio destro 1 (25) dell'MFP con un cacciavite a testa piana.

---

19. 使用一字螺丝刀将 MFP 主机的右部盖板 1(25) 的盖子 (44) 拆下。

---

19. MFP 본체의 우측커버 1 (25) 의 뚜껑 (44) 을마이너스 드라이버로 제거합니다 .

---

19. MFP 本体の右カバー1(25) のふた (44) をマイナスドライバーで取り外す。

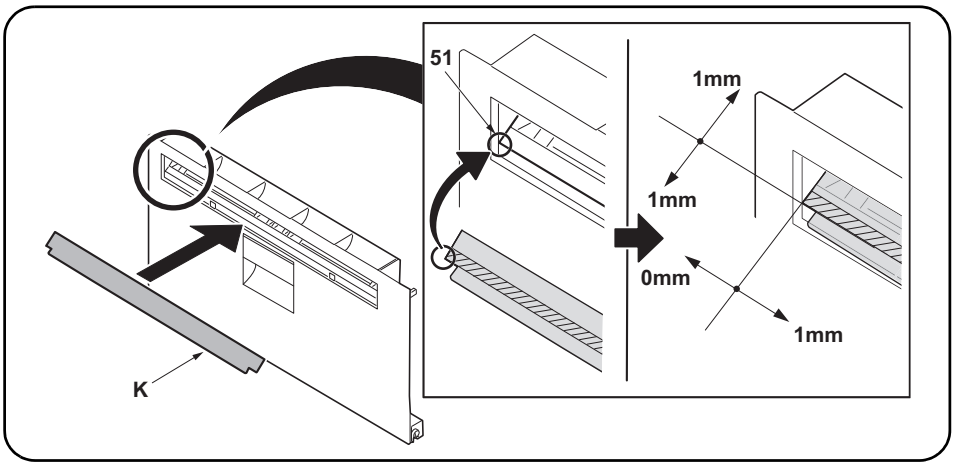

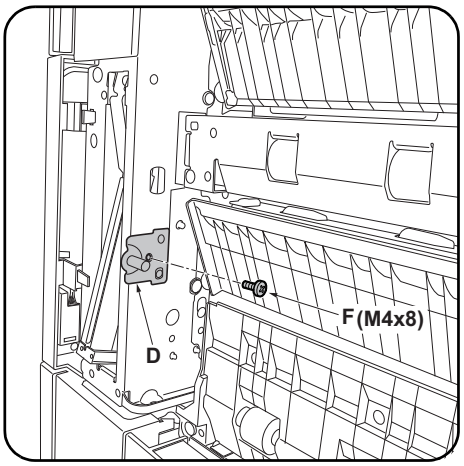

20. After using alcohol to clean place adhering the film, adhere the film (K) in the position (51) indicated in the illustration.

21. Install a lock pin (D) on the front right of the MFP using an M4 × 8 screw (F).

---

20. Coller le film (K) sur l'emplacement (51) indiqué dans l'illustration, après avoir soigneusement nettoyé cet emplacement à l'alcool.

21. Monter une broche de verrouillage (D) à droite et à l'avant du MFP en procédant à l'aide d'une vis M4 × 8 (F).

---

20. Después de utilizar alcohol para limpiar la zona donde se va a pegar la película, pegue la película (K) en el lugar (51) que se indica en la ilustración.

21. Instale una clavija de bloqueo (D) en la parte derecha frontal del MFP usando un tornillo M4 × 8 (F).

---

20. Zum Anbringen des Films (K) die Stelle zuvor mit Alkohol reinigen und den Film (K) dann in der in der Abbildung angegebenen Position (51) anbringen.

21. Bringen Sie mit einer M4 × 8 Schraube (F) den Arretierungsstift (D) vorne rechts am MFP an.

---

20. Dopo aver utilizzato alcol per pulire la piastra che aderisce alla pellicola, far aderire la pellicola (K) nella posizione (51) indicata nell'illustrazione.

21. Installare un perno di bloccaggio (D) sulla parte anteriore destra dell'MFP utilizzando una vite M4 × 8 (F).

---

20. 使用酒精对薄膜粘贴位置进行清洁后，按插图位置（51）粘贴薄膜（K）。

21. 使用 1 颗 M4×8 螺丝（F）将锁定插销（D）安装到 MFP 主机的右前侧。

---

20. 필름 부착위치를 알코올 청소 후 , 일러스트의 위치 (51) 에 맞춰 필름 (K) 을 부착합니다 .

21. 나사 M4×8(F) 1 개로 잠금 핀 (D) 을 MFP 본체 우측 전면쪽에 설치합니다 .

---

20. フィルム貼り付け位置をアルコール清掃後、イラストの位置(51)にあわせて、フィルム(K)を貼り付ける。

21. ビス M4×8(F)1 本で、ロックピン（D）を MFP 本体右前側に取り付ける。

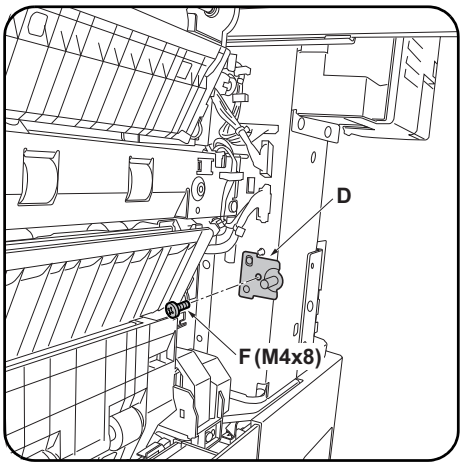

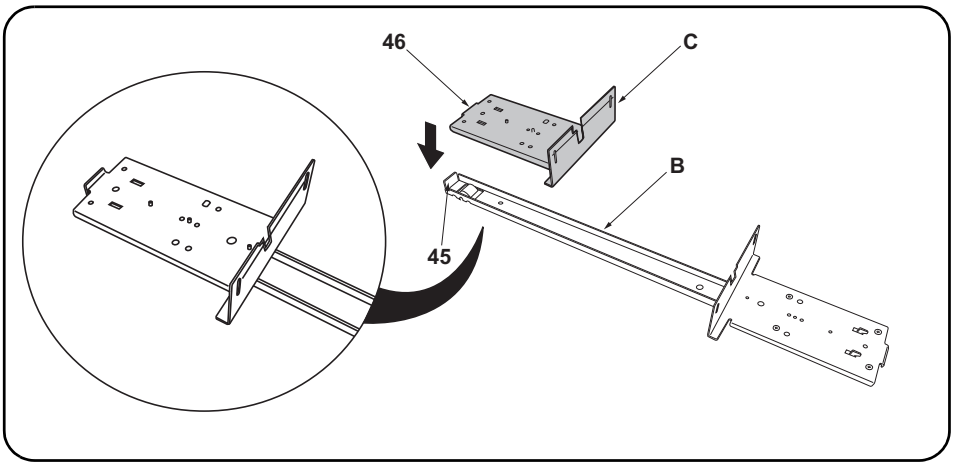

22. Install a lock pin (D) on the rear right of the MFP using an M4 × 8 screw (F) in the same way.

23. Place the small base slider (C) on the large base slider (B). Place so that the bend (46) on the small base slider (C) abuts inside the rest (45) at the end of the large base slider (B).

---

22. Monter une broche de verrouillage (D) à droite et à l'arrière du MFP en procédant de la même manière à l'aide d'une vis M4 × 8 (F).

23. Placer la petite règle de base (C) sur la grande règle de base (B). Disposer la petite règle de base (C) de sorte que son extrémité repliée (46) s'encastre dans la butée (45) à l'extrémité de la grande règle de base (B).

---

22. Instale una clavija de bloqueo (D) en la parte derecha frontal del MFP usando un tornillo M4 × 8 (F).

23. Coloque el deslizador de base pequeño (C) sobre el deslizador de base grande (B). Haga que la dobladura (46) del deslizador de base pequeño (C) quede en el interior del apoyo (45) del extremo del deslizador de base grande (B).

---

22. Bringen Sie auf gleiche Weise mit einer M4 × 8 Schraube (F) den Arretierungsstift (D) hinten rechts am MFP an.

23. Setzen Sie den kleinen Basis-Schieber (C) auf den großen Basis-Schieber (B). Setzen Sie ihn so auf, dass die Biegung (46) am kleinen Basis-Schieber (C) innerhalb der Auflage (45) am Ende des großen Basis-Schiebers (B) anliegt.

---

22. Installare un perno di bloccaggio (D) sulla parte posteriore destra dell'MFP utilizzando una vite M4 × 8 (F) alla stessa maniera.

23. Posizionare lo scivolo di base piccolo (C) sullo scivolo di base grande (B). Posizionare in modo che la piegatura (46) sullo scivolo di base piccolo (C) si attesti all'interno del sostegno (45) all'estremità dello scivolo di base grande (B).

---

22. 按相同方法，使用 1 颗 M4×8 螺丝 (F) 将锁定插销 (D) 安装到 MFP 主机的右后侧。

23. 将底座滑板（小）(C) 放在底座滑板（大）(B)。此时底座滑板（小）(C) 的弯曲部 (46) 应处于底座滑板（大）(B) 的前端折弯部 (45) 的内侧。

---

22. 같은 방식으로 나사 M4×8(F) 1 개로 잠금 핀 (D) 을 MFP 본체 우측 뒤쪽에 설치합니다 .

23. 베이스 슬라이더 대 (B) 의 위에 베이스 슬라이더 소 (C) 를 얹습니다 . 그 때 , 베이스 슬라이더 소 (C) 의 곡선부 (46) 가 베이스 슬라이더 대 (B) 의 맨 앞쪽의 꺾이고 구부러진 부분 (45) 의 안쪽으로 오도록 세트합니다 .

---

22. 同様にビス M4×8(F) 1 本で、ロックピン (D) を MFP 本体右後側に取り付ける。

23. ベーススライダー大 (B) の上にベーススライダー小 (C) を乗せる。その際、ベーススライダー小 (C) の曲げ (46) がベーススライダー大 (B) の先端折り曲げ部 (45) の内側にくるようにセットする。

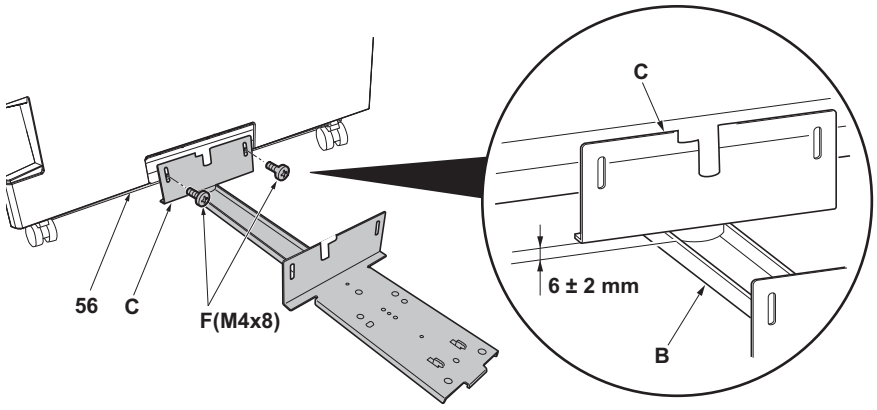

24. Insert the small base slider (C) under the paper feeder. Install to the base (56) using 2 M4 × 8 screws (F) so that the gap between the small base slider (C) and the large base slider (B) is 6 ± 2 mm.
* For PF-730, install to the screw holes marked “R”.

---

24. Insérer la petite règle de base (C) sous le bureau papier. Fixer à la base (56) à l'aide de 2 vis M4 × 8 (F) de sorte que le battement entre la petite règle de base (C) et la grande règle de base (B) soit de 6 ± 2 mm.
* Pour le PF-730, fixer aux trous de vis marqués "R".

---

24. Inserte el deslizador de base pequeño (C) debajo del alimentador de papel. Instálelo en la base (56) usando 2 tornillos M4 × 8 (F) de manera tal que el huelgo entre el deslizador de base pequeño (C) y el deslizador de base grande (B) sea de 6 ± 2 mm.
* En el caso de PF-730, instale en los orificios para tornillo “R”.

---

24. Stecken Sie den kleinen Basis-Schieber (C) unter den Papiereinzug. Befestigen Sie ihn mit 2 M4 × 8 Schrauben (F) so an der Basis (56), dass der Abstand zwischen dem kleinen Basis-Schieber (C) und dem großen Basis-Schieber (B) 6 ± 2 mm beträgt.
* Bei Modell PF-730 an den mit "R" markierten Schraublöchern befestigen.

---

24. Inserire lo scivolo di base piccolo (C) sotto l'unità di alimentazione carta. Installare alla base (56) utilizzando 2 viti M4 × 8 (F) in modo che lo spazio tra lo scivolo di base piccolo (C) e lo scivolo di base grande (B) sia di 6 ± 2 mm.
* Per PF-730, installare ai fori per viti segnalati con “R”.

---

24. 将底座滑板（小）(C) 装入供纸盒的下方。使用 2 颗 M4×8(F) 螺丝将底座滑板（小）(C) 安装到底板 (56) 上，确保底座滑板（小）(C) 与底座滑板（大）(B) 之间的间隙为 6±2mm。
※PF-730 时，安装到带有 R 刻印的螺纹孔上。

---

24. 베이스 슬라이더 소 (C) 를 용지 급지대 밑에 넣습니다 . 베이스 슬라이더 소 (C) 와 베이스 슬라이더 대 (B) 의 틈이 6±2mm 가 되도록 나사 M4×8(F) 2 개로 바닥판 (56) 에 장착합니다 .
※PF-730 은 R 의 각인이 있는 나사구멍에 장착합니다 .

---

24. ベーススライダー小 (C) をペーパーフィーダーの下に入れる。ベーススライダー小 (C) とベーススライダー大 (B) の隙間が、6±2mm になるようにビス M4×8(F)2 本で底板 (56) に取り付ける。
※PF-730 は R の刻印のあるビス穴に取り付ける。

Installation on medium-speed MFPs
If installing on a high-speed MFP, proceed to step 28.
25. Reinstall the lower right rear cover (11).
26. Reinstall the front right cover (5).
27. Reinstall the lower right cover (1).
Proceed to step 32.

Installation on high-speed MFPs
28. Reinstall the lower right rear cover (37).
29. Reinstall the front right cover (32).
30. Reinstall the right cover 2 (28).
31. Reinstall the right cover 1 (25).

Montage sur des MFP à vitesse moyenne
Si le montage est fait sur un MFP à grande vitesse, passer à l'étape 28.
25. Reposer le capot arrière inférieur droit (11).
26. Reposer le capot avant droit (5).
27. Reposer le capot inférieur droit (1).
Passer à l'étape 32.

Montage sur des MFP à grande vitesse
28. Reposer le capot arrière inférieur droit (37).
29. Reposer le capot avant droit (32).
30. Reposer le capot droit 2 (28).
31. Reposer le capot droit 1 (25).

Instalación en las MFP de velocidad media
Si se instala en una MFP de alta velocidad, vaya al paso 28.
25. Reinstale la cubierta trasera inferior derecha (11).
26. Reinstale la cubierta delantera derecha (5).
27. Reinstale la cubierta derecha inferior (1).
Vaya al paso 32.

Instalación en las MFP de alta velocidad
28. Reinstale la cubierta trasera inferior derecha (37).
29. IReinstale la cubierta delantera derecha (32).
30. Reinstale la cubierta derecha 2 (28).
31. Reinstale la cubierta derecha 1 (25).

Installation an MFP der mittleren Leistungsklasse
Gehen Sie zur Installation an einem MFP der Hochleistungsklasse weiter zu Schritt 28.
25. Bringen Sie die untere rechte hintere Abdeckung (11) wieder an.
26. Bringen Sie die vordere rechte Abdeckung (5) wieder an.
27. Bringen Sie die untere rechte Abdeckung (1) wieder an.
Gehen Sie weiter zu Schritt 32.

Installation an MFP der Hochleistungsklasse
28. Bringen Sie die untere rechte hintere Abdeckung (37) wieder an.
29. Bringen Sie die vordere rechte Abdeckung (32) wieder an.
30. Bringen Sie die rechte Abdeckung 2 (28) wieder an.
31. Bringen Sie die rechte Abdeckung 1 (25) wieder an.

Installazione sulle MFP a velocità media
Se si installa su una MFP a velocità alta, procedere al passo 28.
25. Reinstallare il coperchio posteriore inferiore destro (11).
26. Reinstallare il coperchio destro anteriore (5).
27. Reinstallare il coperchio destro inferiore (1).
Procedere al passo 32.

Installazione sulle MFP a velocità alta
28. Reinstallare il coperchio posteriore inferiore destro (37).
29. Reinstallare il coperchio destro anteriore (32).
30. Reinstallare il coperchio destro 2 (28).
31. Reinstallare il coperchio destro 1 (25).

安装于中速 MFP 上时
安装于高速 MFP 上时，进至步骤 28。

25. 按原样安装右下后部盖板 (11)。
26. 按原样安装右前部盖板 (5)。
27. 按原样安装右下部盖板 (1)。
进至步骤 32。

安装于高速 MFP 上时
28. 按原样安装右下后部盖板 (37)。
29. 按原样安装右前部盖板 (32)。
30. 按原样安装右部盖板 2(28)。
31. 按原样安装右部盖板 1(25)。

중속 MFP 에 설치하는 경우
고속 MFP 에 설치하는 경우에는 순서 28 로 진행합니다 .
25. 우측하단 뒷커버 (11) 를 원래대로 장착합니다 .
26. 우측 전면커버 (5) 를 원래대로 장착합니다 .
27. 우측 하단커버 (1) 를 원래대로 장착합니다 .
순서 32 로 진행합니다 .

고속 MFP 에 설치하는 경우
28. 우측하단 뒷커버 (37) 를 원래대로 장착합니다 .
29. 우측 전면커버 (32) 를 원래대로 장착합니다 .
30. 우측커버 2 (28) 를 원래대로 장착합니다 .
31. 우측커버 1 (25) 를 원래대로 장착합니다 .

中速 MFP に設置の場合
高速 MFP に設置の場合は手順 28 に進む。
25. 右下後カバー(11) を元通り取り付ける。
26. 右前カバー(5) を元通り取り付ける。
27. 右下カバー(1) を元通り取り付ける。
手順 32 に進む。

高速 MFP に設置の場合
28. 右下後カバー(37) を元通り取り付ける。
29. 右前カバー(32) を元通り取り付ける。
30. 右カバー2 (28) を元通り取り付ける。
31. 右カバー1 (25) を元通り取り付ける。

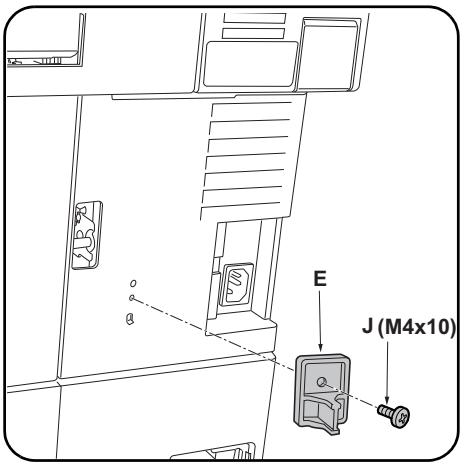

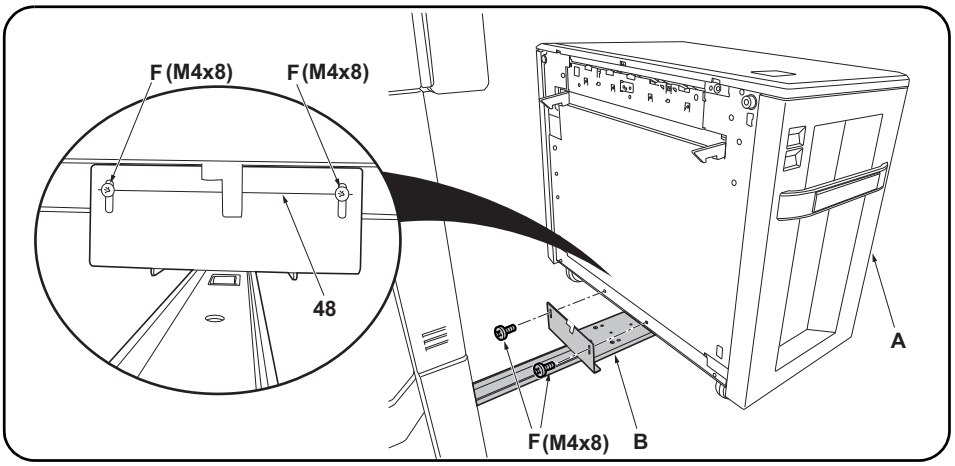

32. Install the switch press plate (E) using the M4 × 10 tapping screw (J).

33. Install the side feeder (A) to the large base slider (B) using 2 M4 × 8 screws (F). Install so that the center of the M4 × 8 screws (F) comes over the horizontal line (48) of the mounting plate on the large base slider (B).

---

32. Fixer la plaque de pression du contacteur (E) à l'aide d'une vis de connexion M4 × 10 (J).

33. Fixer le dispositif du plateau d'alimentation latéral (A) à la grande règle de base (B) à l'aide de 2 vis M4 × 8 (F). Procéder de sorte que l'axe des vis M4 × 8 (F) recouvre la ligne horizontale (48) du plateau de montage sur la grande règle de base (B).

---

32. Instale la placa de presión del interruptor (E) usando el tornillo de roscado M4 × 10 (J).

33. Instale el alimentador lateral (A) en el deslizador de base grande (B) usando 2 tornillos M4 × 8 (F). Instale de manera que el centro de los tornillos M4 × 8 (F) queden sobre la línea horizontal (48) de la placa de montaje del deslizador de base (B) grande.

---

32. Befestigen Sie mit der M4 × 10 Schneidschraube (J) die Schalterdruckplatte (E).

33. Befestigen Sie den seitlichen Einzug (A) mit 2 M4 × 8 Schrauben (F) am großen Basis-Schieber (B). Befestigen Sie ihn so, dass die Mitte der M4 × 8 Schrauben (F) über der Waagrechtlinie (48) der Montageplatte am großen Basis-Schieber (B) liegt.

---

32. Installare la piastra spingi interruttore (E) utilizzando la vite autofilettante M4 × 10 (J).

33. Installare l'unità di alimentazione laterale (A) allo scivolo di base grande (B) utilizzando 2 viti M4 × 8 (F). Installare in modo che il centro delle viti M4 × 8 (F) sia sulla linea orizzontale (48) della piastra di montaggio sullo scivolo di base grande (B).

---

32. 使用 1 颗 M4×10 自攻螺丝 (J) 安装开关挡板 (E)。

33. 使用 2 颗 M4×8 螺丝 (F) 将侧供纸盒 (A) 安装到底座滑板（大）(B) 上。此时，应确保 M4×8 螺丝 (F) 的中心处于底座滑板（大）(B) 的安装板的平行线 (48) 上。

---

32. 탑핑나사 M4×10(J) 1 개로 스위치 판 (E) 을 장착합니다 .

33. 나사 M4×8(F) 2 개로 베이스 슬라이더 대 (B) 에 사이드 피더 (A) 를 장착합니다 . 그 때 , 베이스 슬라이더 대 (B) 의 설치판의 평행선 (48) 에 나사 M4×8(F) 의 센터가 오도록 장착합니다 .

---

32. タッピングビス M4×10(J)1 本でスイッチ当たり板 (E) を取り付ける。

33. ビス M4×8(F)2 本でベーススライダー大 (B) にサイドフィーダー(A) を取り付ける。その際、ベーススライダー大 (B) の取付板の平行線 (48) にビス M4×8(F) のセンターがくるように取り付ける。

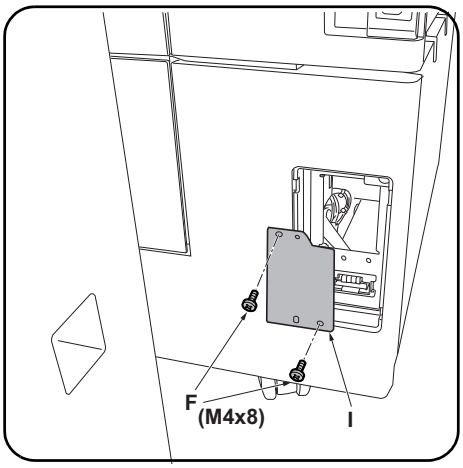

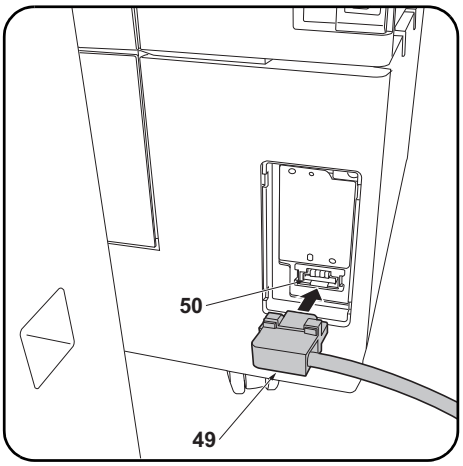

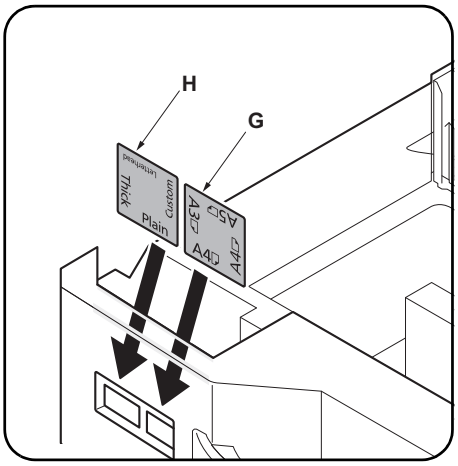

34. Install the cover plate (I) using 2 M4 × 8 screws (F).

35. Plug the signal cable (49) for the side feeder into the paper feeder connector (50).
36. Push the side feeder to connect it to the MFP.

Setting the paper size plate and media type plate
Insert the paper size plate (G) and media type plate (H) into the each slots respectively

---

34. Fixer le capot (I) à l'aide de 2 vis M4 × 8 (F).

35. Enficher le câble de signal (49) du dispositif du plateau d'alimentation latéral dans le connecteur (50) du bureau papier.
36. Pousser le dispositif du plateau d'alimentation latéral pour le raccorder au MFP.

Disposition des plaquettes du format de papier et du type de support
Introduire la plaquette du format de papier (G) et la plaquette du type de support (H) dans leur logement respectif.

---

34. Instale la tapa (I) usando los 2 tornillos M4 × 8 (F).

35. Conecte el cable de señal (49) del alimentador lateral en el conector del alimentador de papel (50).
36. Empuje el alimentador lateral para conectarlo al MFP.

Ajuste de la placa de tamaño de papel y la placa de tipo de medio
Inserte la placa de tamaño de papel (G) y la placa de tipo de medio (H) en cada uno de las ranuras, respectivamente.

---

34. Bringen Sie die Abdeckungsplatte (I) mit 2 M4 × 8 Schrauben (F) an.

35. Schließen Sie das Signalkabel (49) für den seitlichen Einzug am Papiereinzug-Steckverbinder (50) an.
36. Drücken Sie auf den seitlichen Einzug, um ihn mit dem MFP zu verbinden.

Einsetzen der Papierformatkarte und der Medientypkarte
Setzen Sie die Papierformatkarte (G) und die Medientypkarte (H) in die jeweiligen Führungen.

---

34. Installare il coperchio (I) utilizzando 2 viti M4 × 8 (F).

35. Collegare il cavo del segnale (49) per l'unità di alimentazione laterale nel connettore dell'unità di alimentazione carta (50).
36. Spingere l'unità di alimentazione laterale per collegarla all'MFP.

Impostazione della piastra di formato carta e della piastra del tipo di supporto
Inserire la piastra del formato carta (G) e la piastra del tipo di supporto (H) nei rispettivi alloggiamenti.

---

34. 使用 2 颗 M4×8 螺丝 (F) 安装盖板 (I)。

35. 将侧供纸盒的信号线 (49) 连接到供纸盒的接口 (50) 上。
36. 按住侧供纸盒，将其与 MFP 主机连接。

纸张尺寸标示和纸张种类标示的安装
将纸张尺寸标示 (G) 和纸张种类标示 (H) 分别插入到图示的插槽中。

---

34. 나사 M4×8(F) 2 개로 커버 플레이트 (I) 를 장착합니다 .

35. 사이드 피더의 신호선 (49) 을 용지 급지대의 커넥터 (50) 에 접속합니다 .
36. 사이드 피더를 밀어 MFP 본체에 접속합니다 .

용지크기 플레이트와 용지종류 플레이트의 세트
용지크기 플레이트 (G) 와 용지종류 플레이트 (H) 를 각표시 슬롯에 각각 삽입한다 .

---

34. ビス M4×8(F)2 本でカバープレート (I) を取り付ける。

35. サイドフィーダーの信号線 (49) をペーパーフィーダーのコネクター(50) に接続する。
36. サイドフィーダーを押し、MFP 本体に接続する。

用紙サイズプレートと用紙種類プレートのセット
用紙サイズプレート (G) と用紙種類プレート (H) を各表示スロットにそれぞれ挿入する。

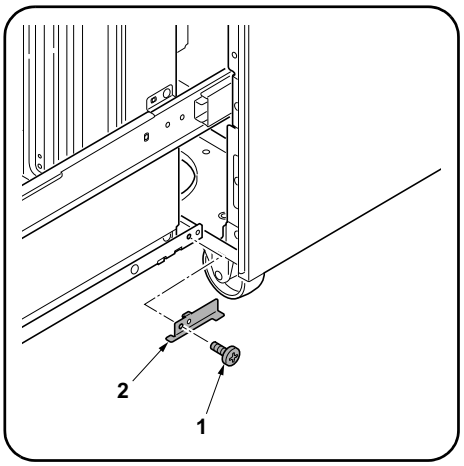

Changing paper size (metric specifications only)
At shipment, Letter is set for inch models and A4 is set for metric models. Use the procedure below to change the size to B5.

1. Pull out the side feeder cassette.
2. Remove a screw (1) and remove the stopper (2).

Modification du format du papier (pour spécifications métriques seulement)
À expédition, les modèles à mesure en pouces sont réglés sur le format Letter et les modèles à mesure métrique sur le format A4. Pour passer au format B5, procéder de la manière suivante.

1. Sortir le tiroir du dispositif du plateau d'alimentation latéral.
2. Déposer la vis (1) et la butée (2).

Cómo cambiar el tamaño de papel (sólo para las especificaciones métricas)
En el momento de salida de fábrica, se configura Carta para los modelos en pulgadas y A4 para los modelos en sistema métrico. Siga este procedimiento para cambiar el tamaño a B5.

1. Extraiga el cajón del alimentador lateral.
2. Quite el tornillo (1) y quite el tope (2).

Ändern des Papierformats (nur metrische Spezifikationen)
Beim Werksversand ist bei Modellen mit Zollmaß das Format Letter voreingestellt und bei Modellen mit metrischem Maß das Format A4.
Das Format kann wie folgend auf B5 umgeschaltet werden.

1. Ziehen Sie die Papierlade des seitlichen Einzugs heraus.
2. Entfernen Sie eine Schraube (1) und nehmen Sie den Anschlag (2) heraus.

Cambio del formato della carta (solo per le specifiche metriche)
Al momento della spedizione, Letter è impostato per le specifiche in pollici e A4 è impostato per le specifiche metriche. Usare la procedura riportata sotto per cambiare il formato a B5.

1. Estrarre il cassetto dell'unità di alimentazione laterale.
2. Rimuovere la vite (1) e quindi rimuovere il fermo (2).

纸张尺寸更改（仅限公制规格）
产品出厂时，英制规格设定为 Letter、公制规格设定为 A4。要将尺寸更改为 B5 时，请按以下步骤进行操作。

1. 拉出侧供纸盒的纸盒。
2. 拆除 1 颗螺丝 (1)，拆下挡块 (2)。

용지크기 변경 (센치 사양만)
출하시 , 인치사양은 Letter, 센치사양은 A4 로 설정되어 있습니다 . 크기를 B5 로 변경하는 경우에는 다음 순서를 진행해 주십시오 .

1. 사이드 피더의 카세트를 빼 냅니다 .
2. 나사 (1) 1 개를 제거하고 스토퍼 (2) 를 떼어 냅니다 .

[用紙サイズ変更(センチ仕様のみ)]
出荷時、インチ仕様は Letter、センチ仕様は A4 に設定されています。サイズを B5 に変更する場合は次の手順をおこなってください。

1. サイドフィーダーのカセットを引き出す。
2. ビス (1)1 本を外し、ストッパー (2) を取り外す。

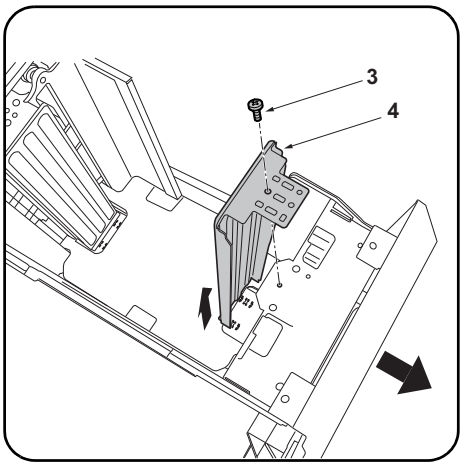

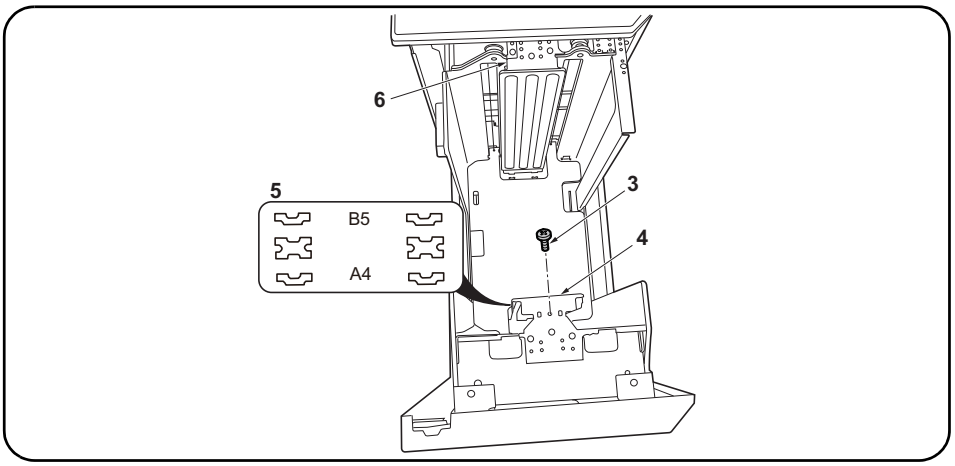

3. Remove a screw (3) and remove the front deck cursor (4).

4. Move the front deck cursor (4) to match the size marking (5) (the outermost is A4, the innermost is B5) at the bottom of the cassette.
5. Fix the front deck cursor (4) using the screw (3).
6. Move the rear deck cursor (6) in the same way.

---

3. Déposer la vis (3) et le curseur de platine avant (4).

4. Déplacer le curseur de platine avant (4) en fonction du repère de format papier (5) (le repère le plus à l'extérieur est celui du format A4, celui le plus à l'intérieur, celui du format B5) se trouvant au fond de le tiroir.
5. Fixer le curseur de platine avant (4) à l'aide de la vis (3).
6. Déplacer le curseur de platine arrière (6) en procédant de la même manière.

---

3. Quite el tornillo (3) y quite el cursor frontal de la plataforma (4).

4. Mueva el cursor frontal de la plataforma (4) para que corresponda con la marca de tamaño (5) (la más externa es A4, la más interna es B5) en la parte inferior del cajón.
5. Fije el cursor frontal de la plataforma (4) usando el tornillo (3).
6. Mueva el cursor trasero de la plataforma (6) de la misma forma.

---

3. Entfernen Sie eine Schraube (3) und nehmen Sie den vorderen Konsole-Cursor (4) heraus.

4. Versetzen Sie den vorderen Konsole-Cursor (4), um die Formatmarkierung (5) am Boden der Papierlade anzupassen (die äußerste ist A4, die innerste ist B5).
5. Befestigen Sie den vorderen Konsole-Cursor (4) mit der Schraube (3).
6. Versetzen Sie den hinteren Konsole-Cursor (6) auf gleiche Weise.

---

3. Rimuovere la vite (3) e quindi rimuovere il cursore frontale del deck (4).

4. Spostare il cursore frontale del deck (4) per farlo corrispondere al segno del formato (5) (il più esterno è A4, il più interno è B5) alla parte inferiore del cassetto.
5. Fissare il cursore frontale del deck (4) utilizzando la vite (3).
6. Spostare il cursore posteriore del deck (6) alla stessa maniera.

---

3. 拆除 1 颗螺丝 (3)，拆下前部纸张长度调节片 (4)。

4. 根据纸盒下部的刻印 (5) （最外侧为 A4、最内侧为 B5）移动前部纸张长度调节片 (4)。
5. 使用 1 颗螺丝 (3) 固定前部纸张长度调节片 (4)。
6. 按相同方法移动后部纸张长度调节片 (6)。

---

3. 나사 (3) 1 개를 제거하고 데크커서앞 (4) 을 제거합니다 .

4. 카세트 아래의 사이즈각인 (5) (가장 바깥쪽이 A4, 가장 안쪽이 B5) 에 맞춰 데크커서앞 (4) 을 이동시킵니다 .
5. 나사 (3) 1 개로 데크커서앞 (4) 을 고정합니다 .
6. 같은 방식으로 데크커서뒤 (6) 를 이동시킵니다 .

---

3. ビス (3)1 本を外し、デッキカーソル前 (4) を取り外す。

4. カセット下のサイズ刻印 (5) （一番外側が A4、一番内側が B5）に合わせてデッキカーソル前 (4) を移動させる。
5. ビス (3)1 本で、デッキカーソル前 (4) を固定する。
6. 同様にデッキカーソル後 (6) を移動させる。

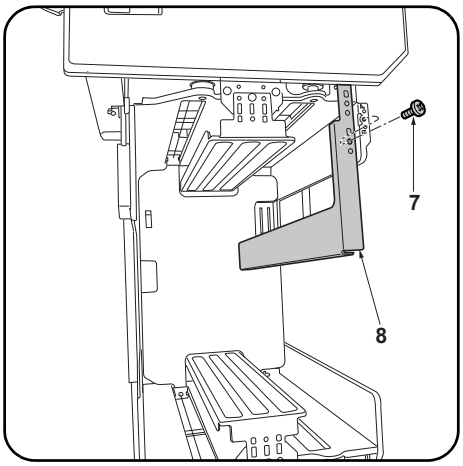

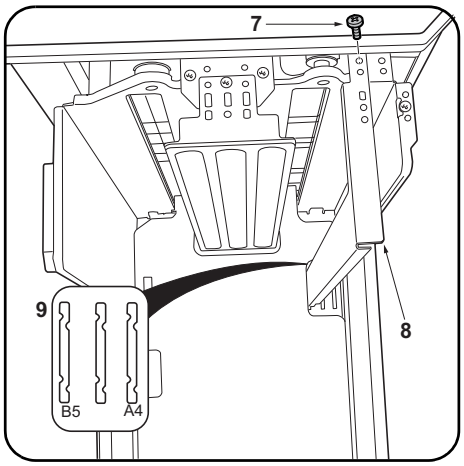

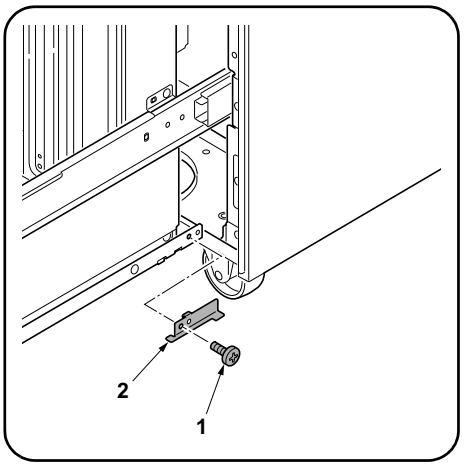

7. Remove a screw (7) and remove the deck trailing edge cursor (8).

8. Move the deck trailing edge cursor (8) to match the size marking (9) at the bottom of the cassette.
9. Fix the deck trailing edge cursor (8) with the screw (7).

10. Reinstall the stopper (2) using the screw (1).
11. Run maintenance mode U208 and set the paper size.

---

7. Déposer la vis (7) et déposer le curseur du bord arrière de la platine (8).

8. Déplacer le curseur du bord arrière de la platine (8) en fonction du repère de format papier (9) se trouvant au fond de le tiroir.
9. Fixer le curseur du bord arrière de la platine (8) à l'aide de la vis (7).

10. Reposer la butée (2) à l'aide de la vis (1).
11. Exécuter le mode maintenance U208 et définir le format du papier.

---

7. Quite el tornillo (7) y quite el cursor del borde inferior de la plataforma (8).

8. Mueva el cursor del borde inferior de la plataforma (8) para que corresponda con la marca de tamaño (9) en la parte inferior del cajón.
9. Fije el cursor del borde inferior de la plataforma (8) con el tornillo (7).

10. Reinstale el tope (2) usando el tornillo (1).
11. Active el modo de mantenimiento U208 y ajuste el tamaño de papel.

---

7. Entfernen Sie eine Schraube (7) und nehmen Sie den Hinterkante-Cursor (8) heraus.

8. Versetzen Sie den Hinterkante-Cursor (8), um die Formatmarkierung (9) am Boden der Papierlade anzupassen.
9. Befestigen Sie den Hinterkante-Cursor (8) mit der Schraube (7).

10. Bringen Sie den Anschlag (2) wieder mit der Schraube (1) an.
11. Führen Sie den Wartungsmodus U208 aus und stellen Sie das Papierformat ein.

---

7. Rimuovere la vite (7) e quindi rimuovere il cursore del bordo finale del deck (8).

8. Spostare il cursore del bordo finale del deck (8) per farlo corrispondere al segno di formato (9) alla parte inferiore del cassetto.
9. Fissare il cursore del bordo finale del deck (8) con la vite (7).

10. Reinstallare il fermo (2) utilizzando la vite (1).
11. Eseguire la modalita manutenzione U208 e impostare il formato carta.

---

7. 拆除 1 颗螺丝 (7)，拆下后端纸张长度调节片 (8)。

8. 根据纸盒下部的刻印 (9) 移动后端纸张长度调节片 (8)。
9. 使用 1 颗螺丝 (7) 固定后端纸张长度调节片 (8)。

10. 使用 1 颗螺丝 (1)，按原样安装挡块 (2)。
11. 执行维修模式 U208，进行纸张尺寸的设定。

---

7. 나사 (7) 1 개를 제거하고 데크뒤커서 (8) 를 제거합니다 .

8. 카세트 아래의 사이즈각인 (9) 에 맞춰서 데크뒤커서 (8) 를 이동시킵니다 .
9. 나사 (7) 1 개로 데크뒤커서 (8) 를 고정합니다 .

10. 나사 (1) 1 개로 스토퍼 (2) 를 원래대로 장착합니다 .
11. 메인터넌스 모드 U208 을 실행해 용지크기 설정을 합니다 .

---

7. ビス (7)1 本を外し、デッキ後端カーソル (8) を取り外す。

8. カセット下のサイズ刻印 (9) に合わせて、デッキ後端カーソル (8) を移動させる。
9. ビス (7)1 本で、デッキ後端カーソル (8) を固定する。

10. ビス (1)1 本で、ストッパー(2) を元通り取り付ける。
11. メンテナンスモード U208 を実行し、用紙サイズの設定をおこなう。

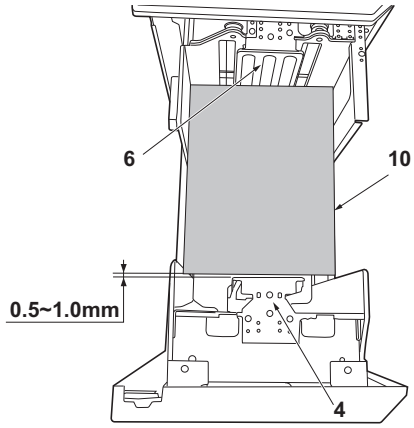

Adjusting the cursor width

1. Load paper in the cassettes.
2. If the gap between the front deck cursor (4) and the paper (10) is outside the 0.5 to 1.0 mm range when the paper (10) is touching up against the rear deck cursor (6), perform the following adjustment.
   * A cursor width that is too small can hinder paper feeding, while a cursor width that is too large can lead to problems such as skewed paper feed.

Réglage de la largeur du curseur

1. Charger les tiroirs en papier.
2. Si l'écartement entre le curseur de platine avant (4) et le papier (10) est hors des limites de 0,5 à 1,0 mm quand le papier (10) touche le curseur de platine arrière (6), procéder au réglage suivant.
   * Une largeur trop faible du curseur risque d'empêcher l'entraînement du papier et une largeur trop grande risque d'entraîner des problèmes du type entraînement du papier de biais.

Cómo ajustar la anchura del cursor

1. Cargue papel en los cajones.
2. Si la separación entre el cursor frontal de la plataforma (4) y el papel (10) está fuera del rango de 0,5 a 1,0 mm cuando el papel (10) toca el cursor trasero de la plataforma (6), haga el siguiente ajuste.
   * Una anchura del cursor demasiado pequeña puede impedir la alimentación de papel; una anchura del cursor demasiado grande puede provocar problemas con la alimentación torcida de papel.

Einstellen der Cursor-Breite

1. Papier in die Papierladen einlegen.
2. Falls der Abstand zwischen dem vorderen Konsole-Cursor (4) und dem Papier (10) außerhalb des Bereichs 0,5 bis 1,0 mm liegt, wenn das Papier (10) am hinteren Konsole-Cursor (6) anliegt, ist folgende Einstellung vorzunehmen.
   * Eine zu kleine Cursor-Breite kann den Papiereinzug behindern, wogegen eine zu große Cursor-Breite verkanteten Papiereinzug und ähnliche Probleme verursachen kann.

Regolazione della larghezza del cursore

1. Caricare carta nei cassetti.
2. Se lo spazio tra il cursore frontale del deck (4) e la carta (10) è fuori della gamma da 0,5 a 1,0 mm quando la carta (10) tocca il cursore postertiore del deck (6), eseguire la regolazione seguente.
   * Una larghezza dei cursori troppo piccola può ostacolare l'alimentazione della carta, mentre unalarghezza dei cursori troppo grande può essere causa di problemi, come ad esempio l'alimentazione obbliqua della carta.

游标宽度的调节

1. 在供纸盒中装入纸张。
2. 在堆纸板后部游标（6）与纸张（10）接触的状态下，如果堆纸板前部游标（4）与纸张（10）的间隙超出了 0.5 ～ 1.0㎜ 的范围，须进行以下调节。
   ※ 如果游标宽度过小，可能造成不供纸，游标宽度过大，则可能发生歪斜进纸等情况。

커서 폭 조정

1. 카세트에 용지를 장착합니다 .
2. 데크커서 뒤 (6) 에 용지 (10) 가 접하고 있는 상태에서 데크커서 앞 (4) 과 용지 (10) 의 틈이 0.5 ～ 1.0mm 의 범위외의 경우에는 이하의 조정을 합니다 .
   ※ 커서 폭이 작으면 무급지 , 커서 폭이 크면 경사급지 등이 발생할 가능성이 있습니다 .

［カーソル幅の調整］

1. カセットに用紙をセットする。
2. デッキカーソル後（6）に用紙（10）が接している状態で、デッキカーソル前（4）と用紙（10）の隙間が 0.5 ～ 1.0㎜ の範囲外の場合は、以下の調整をおこなう。
   ※ カーソル幅が小さいと無給紙、カーソル幅が大きいと斜め給紙などが発生する可能性がある。

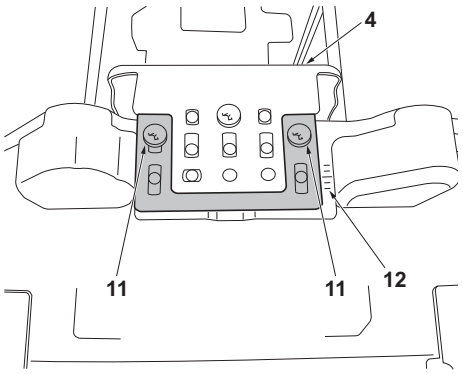

3. Loosen 2 adjusting screws (11) on the front deck cursor (4) and move the cursor (4) while checking with the scale (12).
4. Retighten the 2 adjusting screws (11).
5. Check that the gap between the front deck cursor (4) and the paper is between 0.5 and 1.0 mm.

---

3. Desserrer les 2 vis de réglage (11) sur le curseur de platine avant (4) et déposer le curseur (4) tout en vérifiant à l'aide de l'échelle (12).
4. Resserrer les 2 vis de réglage (11).
5. Vérifier que l'écartement entre le curseur de platine avant (4) et le papier est entre 0,5 et 1,0 mm.

---

3. Afloje 2 tornillos de ajuste (11) en el cursor frontal de la plataforma (4) y mueva el cursor (4) mientras verifica con la escala (12).
4. Vuelva a apretar los 2 tornillos de ajuste (11).
5. Verifique que la separación entre el cursor frontal de la plataforma (4) y el papel sea de entre 0,5 y 1,0 mm.

---

3. Lösen Sie 2 Einstellschrauben (11) am vorderen Konsole-Cursor (4) und versetzen Sie den Cursor (4) unter Beobachtung der Skale (12).
4. Die 2 Einstellschrauben (11) wieder anziehen.
5. Vergewissern Sie sich, dass der Abstand zwischen dem vorderen Konsole-Cursor (4) und dem Papier im Bereich 0,5 bis 1,0 mm liegt.

---

3. Allentare le 2 viti di regolazione (11) sul cursore frontale del deck (4), e quindi rimuovere il cursore (4) controllando la scala (12).
4. Ristringere le 2 viti di regolazione (11).
5. Controllare che lo spazio tra il cursore frontale del deck (4) e la carta sia compreso nella gamma tra 0,5 e 1,0 mm.

---

3. 拧松前部纸张长度调节片 (4) 的 2 颗调节螺丝 (11)，边确认刻度 (12) 边移动前部纸张长度调节片 (4)。
4. 拧紧 2 颗调节螺丝 (11)。
5. 确认堆纸板前部游标 (4) 与纸张的间隙在 0.5 ～ 1.0㎜ 的范围内。

---

3. 데크커서앞 (4) 의 조정나사 (11) 2 개를 풀어 눈금 (12) 을 확인하면서 데크커서앞 (4) 을 이동시킵니다 .
4. 조정나사 (11) 2 개를 조입니다 .
5. 데크커서 앞 (4) 과 용지의 틈이 0.5 ～ 1.0 mm 범위내가 되어 있는 것을 확인합니다 .

---

3. デッキカーソル前 (4) の調整ビス (11)2 本を緩め、目盛り (12) を確認しながらデッキカーソル前 (4) を移動させる。
4. 調整ビス (11)2 本を締め付ける。
5. デッキカーソル前 (4) と用紙の隙間が 0.5 ～ 1.0㎜ の範囲内になっていることを確認する。

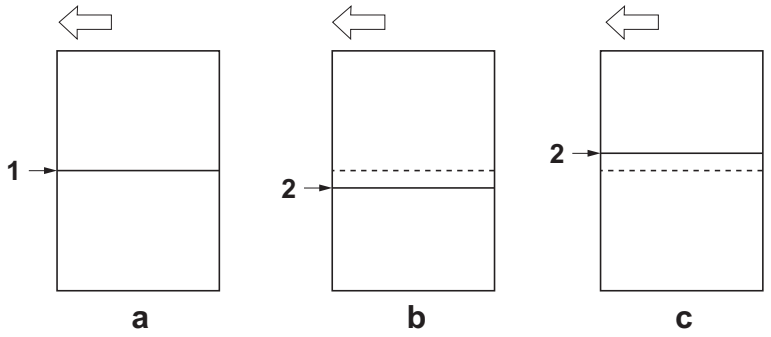

Adjusting the center line
Check the deviation between the center (1) of a correct image (a) and the center (2) of a test pattern.
<Reference value> Wthin ± 2.0 mm

1. Set the maintenance mode U034. Select LSU Out Left and Cassette5.
2. Adjust the values.
   Test pattern (b): Increase the setting value.
   Test pattern (c): Decrease the setting value.
3. Press the Start key to confirm the setting value.

Réglage de l'axe
Vérifier la déviation entre l'axe (1) d'une image correcte (a) et l'axe (2) d'une forme d'essai.
<Valeur de référence> ±2,0 mm max.

1. Passer au mode maintenance U034. Sélectionner LSU Out Left et Cassette5.
2. Régler les valeurs.
   Mire d' essai (b): Augmentez la valeur de réglage.
   Mire d' essai (c): Diminuez la valeur de réglage.
3. Appuyer sur la touche de Start pour confirmer la valeur de réglage.

Ajuste de la línea central
Compruebe la desviación entre el centro (1) de una imagen correcta (a) y el centro (2) de un patrón de prueba.
<Valor de referencia> Dentro de ± 2,0 mm

1. Entre en el modo de mantenimiento U034. Seleccione LSU Out Left y Cassette5.
2. Ajuste los valores.
   Patrón de prueba (b): Aumente el valor de configuración.
   Patrón de prueba (c): Reduzca el valor de configuración.
3. Pulse la tecla de Start para confirmar el valor de configuración.

Einstellen der Mittenlinie
Überprüfen Sie die Abweichung zwischen der Mitte (1) eines korrekten Bilds (a) und der Mitte (2) eines Prüfmusters.
<Bezugswert> Innerhalb ± 2,0 mm

1. Stellen Sie den Wartungsmodus U034 ein. Wählen Sie LSU Out Left und Cassette5.
2. Die Werte einstellen.
   Testmuster (b): Den Einstellwert erhöhen.
   Testmuster (c): Den Einstellwert verringern.
3. Den Einstellwert durch Drücken der Start-Taste bestätigen.

Regolazione della linea centrale
Controllare la deviazione tra il centro (1) di un'immagine corretta (a) e il centro (2) di un modello di prova.
<Valore di riferimento> Entro ± 2,0 mm

1. Impostare la modalità manutenzione U034. Selezionare LSU Out Left e Cassette5.
2. Regolare i valori.
   Modello di prova (b): Aumentare il valore dell'impostazione.
   Modello di prova (c): Diminuire il valore dell'impostazione.
3. Premere il tasto di Start per confermare il valore dell'impostazione.

中心线调节
确认标准图像 (a) 的中心位置 (1) 与测试图案的中心位置 (2) 的偏移。
< 标准值 >±2.0mm 以内

1. 设置维修模式 U034，选择 LSU Out Left、Cassette5。
2. 调整设定值。
   测试图案 (b)：调高设定值。
   测试图案 (c)：调低设定值。
3. 按 Start 键，以确定设定值。

센터라인 조정
적정화상 (a) 의 센터 (1) 와 테스트패턴의 센터 (2) 의 차이를 확인합니다 .
< 기준치 > ±2.0mm 이내

1. 메인터넌스 모드 U034 을 세트하고 LSU Out Left, Cassette5 를 선택합니다 .
2. 설정치를 조정합니다 .
   테트스 패턴 (b) :설정치를 높입니다 .
   테스트 패턴 (c) :설정치를 내립니다 .
3. 시작키를 누르고 설정치를 확인합니다 .

センターライン調整
適正画像 (a) のセンター(1) とテストパターンのセンター(2) のずれを確認する。ずれが基準値外の場合は調整をおこなう。
＜基準値＞ ±2.0mm 以内。

1. メンテナンスモード U034 をセットし、LSU Out Left、Cassette5 を選択する。
2. 設定値を調整する。
   テストパターン (b) :設定値を上げる。
   テストパターン (c) :設定値を下げる。
3. スタートキーを押し、設定値を確定する。

303NG5671202

2013. 4
303NG56712-02

INSTALLATION GUIDE FOR SIDE MULTI TRAY

INSTALLATION GUIDE

GUIDE D’INSTALLATION

GUÍA DE INSTALACION

INSTALLATIONSANLEITUNG

GUIDA ALL’INSTALLAZIONE

安装手册

설치안내서

設置手順書

PF-780

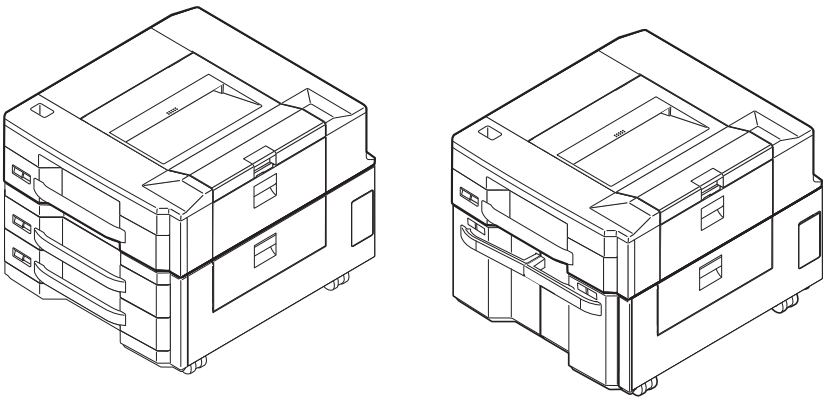

English

References to medium-speed MFPs in this document denote 45/45 and 55/50 ppm color machines.
References to high-speed MFPs in this document denote 65/65 and 75/70 ppm color machines, and 65 and 80 ppm monochrome machines.

Français

Dans le présent document, les références aux MFP à vitesse moyenne renvoient aux machines couleurs 45/45 et 55/50 ppm.
Dans le présent document, les références aux MFP à grande vitesse renvoient aux machines couleurs 65/65 et 75/70 ppm et aux machines monochromes 65 et 80 ppm.

Español

Las referencias a las MFP de velocidad media de este documento corresponden a las máquinas a color de 45/45 y 55/50 ppm.
Las referencias a las MFP de alta velocidad de este documento corresponden a las máquinas a color de 65/65 y 75/70 ppm y a las máquinas monocromáticas de 65 y 80 ppm.

Deutsch

Angaben für MFP der mittleren Leistungsklasse in dieser Anleitung gelten für die 45/45 und 55/50 ppm Vollfarbenkopierer.
Angaben für MFP der Hochleistungsklasse in dieser Anleitung gelten für die 65/65 und 75/70 ppm Vollfarbenkopierer sowie für die 65 und 80 ppm Monochrommaschinen.

Italiano

I riferimenti per le MFP a velocità media riportati in questo documento indicano le macchine a colori 45/45 e 55/50 ppm.
I riferimenti per le MFP a velocità alta riportati in questo documento indicano le macchine a colori 65/65 e 75/70 ppm, e le macchine monocromatiche 65 e 80 ppm.

简体中文

本文中的中速 MFP 代表彩色 45/45 页机型、55/50 页机型。
本文中的高速 MFP 代表彩色 65/65 页机型、75/70 页机型、黑白 65 页机型、80 页机型。

한국어

본문 중 중속 MFP 는 컬러 45/45 매기 , 55/50 매기 .
본문 중 고속 MFP 는 컬러 65/65 매기 , 75/70 매기 , 흑백 65 매기 , 80 매기를 나타냅니다 .

日本語

本文中の中速 MFP はカラー機の 45/45 枚機、55/50 枚機を表す。
本文中の高速 MFP はカラー機の 65/65 枚機、75/70 枚機、モノクロ機の 65 枚機、80 枚機を表す。

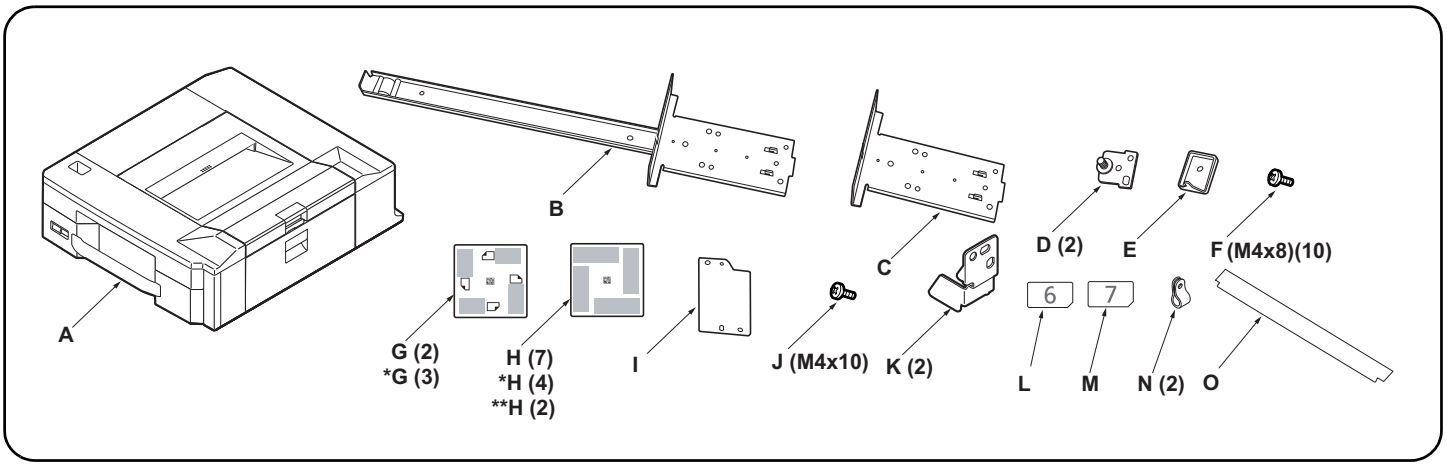

Supplied parts

A. Side multi-tray 1
B. Large base slider 1
C. Small base slider 1
D. Lock pin 2
E. Switch press plate 1
F. M4 × 8 screw 10
G. Paper size plate 2
H. Media type plate(except for 120V model) .. 7
***H.** Media type plate(120V model only) 4
I. Cover plate 1
J. M4 × 10 tapping screw 1
K. Stopper 2
L. Cassette Number Label 6 1
M. Cassette Number Label 7 1
N. Clamp 2
O. Film 1

Be sure to remove any tape and/or cushioning material from supplied parts.

Pièces fournies

A. Bac multiples usages latéral 1
B. Grande règle de base 1
C. Petite règle de base 1
D. Broche de verrouillage 2
E. Plaque de pression de l'interrupteur 1
F. Vis M4 × 8 10
G. Plaquette du format de papier 2
H. Plaquette du type de support 7
I. Capot 1
J. Vis de connexion M4 × 10 1
K. Butée 2
L. Étiquette de numéro de cassette 6 1
M. Étiquette de numéro de cassette 7 1
N. Collier 2
O. Film 1

Veillez à retirer les morceaux de bande adhésive et/ou les matériaux de rembourrage des pièces fournies.

Partes suministradas

A. Multi-bandeja lateral 1
B. Deslizador de base grande 1
C. Deslizador de base pequeño 1
D. Clavija de bloqueo 2
E. Placa de presión del interruptor 1
F. Tornillo M4 × 8 10
G. Placa de tamaño de papel 2
H. Placa de tipo de medio 7
I. Tapa 1
J. Tornillo de roscado M4 × 10 1
K. Tope 2
L. Etiqueta de casete con el número 6 1
M. Etiqueta de casete con el número 7 1
N. Abrazadera 2
O. Película 1

Asegúrese de despegar todas las cintas y/o material amortiguador de las partes suministradas.

Gelieferte Teile

A. Seitliches Mehrzweck-Papierfach 1
B. Großer Basis-Schieber 1
C. Kleiner Basis-Schieber 1
D. Arretierstift 2
E. Schalterdruckplatte 1
F. M4 × 8 Schraube 10
G. Papierformatkarte 2
H. Medientypkarte 7
I. Abdeckplatte 1
J. M4 × 10 Schneidschraube 1
K. Anschlag 2
L. Aufkleber Kassettennummer 6 1
M. Aufkleber Kassettennummer 7 1
N. Schelle 2
O. Film 1

Entfernen Sie Klebeband und/oder Dämpfungsmaterial vollständig von den mitgelieferten Teilen.

Parti di fornitura

A. Vassoio multiplo laterale 1
B. Scivolo di base grande 1
C. Scivolo di base piccolo 1
D. Perno di bloccaggio 2
E. Piastra spingi interruttore 1
F. Vite M4 × 8 10
G. Piastra formato carta 2
H. Piastra tipo carta 7
I. Coperchio 1
J. Vite autofilettante M4 × 10 1
K. Fermo 2
L. Etichetta numero cassetta 6 1
M. Etichetta numero cassetta 7 1
N. Fascetta 2
O. Pellicola 1

Accertarsi di rimuovere tutti i nastri adesivi e/o il materiale di imbottitura dalle parti fornite.

附属品

A. 侧手送纸盘 1
B. 底座滑板（大）..... 1
C. 底座滑板（小）..... 1
D. 锁定插销 2
E. 开关挡板 1
F. M4×8 螺丝 10
*G. 纸张尺寸标示 3
**H. 纸张种类标示 2
I. 盖板 1
J. M4×10 自攻螺丝 1
K. 挡块 2
L. 纸盒编号标签 6 1
M. 纸盒编号标签 7 1
N. 束线夹 2
O. 胶片 1

如果附属品上带有固定胶带，缓冲材料时务必揭下。

동봉품

A. 사이드 멀티 트레이 1
B. 베이스 슬라이더 대 1
C. 베이스 슬라이더 소 1
D. 잠금 핀 2
E. 스위치 판 1
F. 나사 M4×8 10
G. 용지크기 플레이트 2
**H. 용지종류 플레이트 2
I. 커버 플레이트 1
J. 탑핑 나사 M4×10 1
K. 스토퍼 2
L. 카세트 넘버 라벨 6 1
M. 카세트 넘버 라벨 7 1
N. 클램프 2
O. 필름 1

동봉품에 고정 테이프，완충재가 붙어 있는 경우에는 반드시 제거할 것 .

PF-780 同梱品

A. サイドマルチトレイ 1
B. ベーススライダー大 1
C. ベーススライダー小 1
D. ロックピン 2
E. スイッチ当たり板 1
F. ビス M4×8 10
G. 用紙サイズプレート 2
**H. 用紙種類プレート 2
I. カバープレート 1
J. タッピングビス M4×10 1
K. ストッパー 2
L. カセットナンバーラベル 6 1
M. カセットナンバーラベル 7 1
N. クランプ 2
O. フィルム 1

同梱品に固定テープ、緩衝材がついている場合は、必ず取り外すこと。

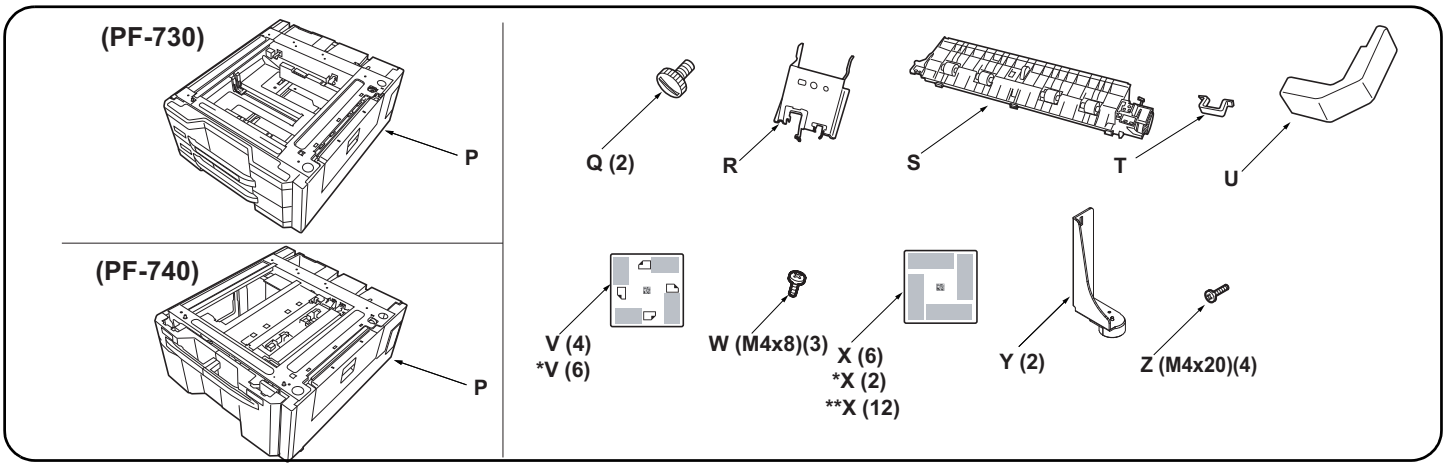

PF-730/740 Supplied parts

P. Paper feeder 1
Q. Pin 2
R. Retainer 1
S. Intermediate paper conveying unit 1
T. Clamp 1
U. Wire cover 1
V. Paper size plate 4
W. S Tite screw M4 × 8 3
X. Media type plate(120V model only) 6
***X.** Media type plate (PF-730:110V model only) 2
****X.** Media type plate (except for above models) 12
Y. Stopper 2
Z. S Tite screws M4 × 20 4

Be sure to remove any tape and/or cushioning material from supplied parts.

Do not use the following parts when installing PF-780: (R), (Y), (Z) and one (W).

PF-730/740 Pièces fournies

P. Bureau papier 1
Q. Broche 2
R. Élément de retenue 1
S. Unité de transport du papier intermédiaire 1
T. Collier 1
U. Couvercle de câble 1
V. Plaquette du format de papier 4
W. Vis S Tite M4 × 8 3
****X.** Plaquette du type de support 12
Y. Butée 2
Z. Vis S Tite M4 × 20 4

Veillez à retirer les morceaux de bande adhésive et/ou les matériaux de rembourrage des pièces fournies

Ne pas utiliser les pièces suivantes pour l'installation de la PF-780 : (R), (Y), (Z) et un (W).

PF-730/740 Partes suministradas

P. Alimentador de papel 1
Q. Clavija 2
R. Retén 1
S. Unidad de transporte de papel intermedia. 1
T. Sujetador 1
U. Cubierta para el cable 1
V. Placa de tamaño de papel 4
W. Tornillo S Tite M4 × 8 3
****X.** Placa de tipo de medio 12
Y. Tope 2
Z. Tornillos S Tite M4 × 20 4

Asegúrese de despegar todas las cintas y/o material amortiguador de las partes suministradas.

No utilice las piezas siguientes cuando instale la PF-780: (R), (Y), (Z) y una (W).

PF-730/740 Gelieferte Teile

P. Papiereinzug 1
Q. Stift 2
R. Halterung 1
S. Eingesetzte Papierfördereinheit 1
T. Klemme 1
U. Kabelabdeckung 1
V. Papierformatkarte 4
W. S-Tite-Schraube M4 × 8 3
****X.** Medientypkarte 12
Y. Anschlag 2
Z. S-Tite-Schrauben M4 × 20 4

Entfernen Sie Klebeband und/oder Dämpfungsmaterial vollständig von den mitgelieferten Teilen.

Die folgenden Teile bei der Installation von PF-780 nicht verwenden: (R), (Y), (Z) und ein (W).

PF-730/740 Parti di fornitura

P. Unità di alimentazione della carta 1
Q. Perno 2
R. Fermo 1
S. Unità intermediale di trasporto carta 1
T. Morsetto 1
U. Coperchio cavi 1
V. Piastra formato carta 4
W. Vite S Tite M4 × 8 3
****X.** Piastra tipo carta 12
Y. Fermo 2
Z. Vite S Tite M4 × 20 4

Accertarsi di rimuovere tutti i nastri adesivi e/o il materiale di imbottitura dalle parti fornite.

Non utilizzare le seguenti parti quando si installa PF-780: (R), (Y), (Z) e uno (W).

PF-730/740 附属品

P. 供纸工作台 1
Q. 固定插销 2
R. 安装板 1
S. 中间搬运单元 1
T. 夹钳 1
U. 电线盖板 1
*V. 纸张尺寸标示 (PF-730) 6
V. 纸张尺寸标示 (PF-740) 4
W. 紧固型 S 螺丝 M4×8 3
*X. 纸张种类标示 2
Y. 限位器 2
Z. 紧固型 S 螺丝 M4 × 20 4

如果附属品上带有固定胶带，缓冲材料时务必揭下。
设置 PF-780 时，不使用以下部件：(R) (Y) (Z) 和 1 颗 (W)

PF-730/740 동봉품

P. 급지대 1
Q. 핀 2
R. 부착판 1
S. 중간반송유니트 1
T. 크램프 1
U. 전선커버 1
V. 용지크기 플레이트 4
W. 나사 M4×8S 타이트 3
*X. 용지종류 플레이트 2
Y. 전도방지쇠 2
Z. 나사 M4×20 S 타이트 4

동봉품에 고정 테이프 , 완충재가 붙어 있는 경우에는 반드시 제거할 것 .

PF-780 을 설치할 경우에는 하기 부품은 사용하지 않음 : (R) (Y) (Z) 과 (W) 1 개

PF-730/740 同梱品

P. ペーパーフィーダー 1
Q. ピン 2
R. 取付板 1
S. 中間搬送ユニット 1
T. クランプ 1
U. 電線カバー 1
V. 用紙サイズプレート 4
W. ビス M4×8S タイト 3
*X. 用紙種類プレート 2
Y. 転倒防止金具 2
Z. ビス M4×20 S タイト 4

同梱品に固定テープ、緩衝材が付いている場合は必ず取り外すこと。

PF-780 を設置する場合は、下記のパーツは使用しない:(R)(Y)(Z) と(W)1 本

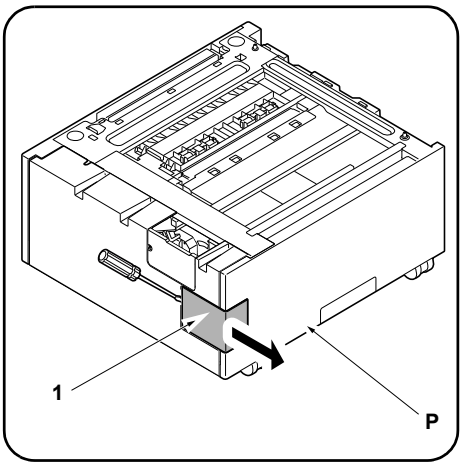

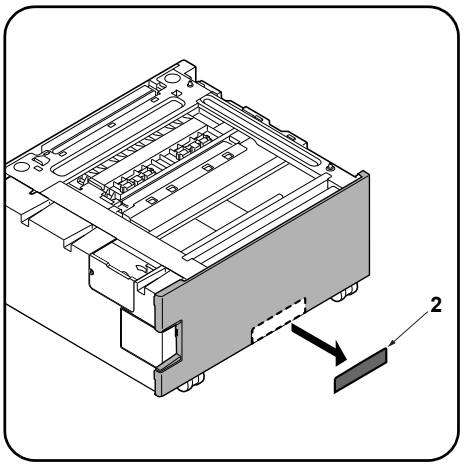

Procedure
Be sure to turn the machine main power switch off and disconnect the machine power plug from the wall outlet before starting to install the side feeder.

[Side feeder assembly]
1. Remove the cover (1) of the paper feeder (P).
   (Do not use cover (1).)
2. Cut the ribs with a nipper, and then remove the breakaway cover (2).

Procédure
Veiller à bien mettre la machine hors tension et à débrancher la fiche d'alimentation de la prise murale avant de commencer l'installation du chargeur latéral.

[Ensemble plateau d'alimentation latéral]
1. Déposer le capot (1) du bureau papier (P).
   (Ne pas utiliser le capot (1).)
2. Couper les nervures avec une pince, puis déposer le couvercle amovible (2)

Procedimiento
Asegúrese de apagar el interruptor principal de la máquina y de desconectar el enchufe de la máquina del receptáculo de pared antes de empezar a instalar el depósito lateral.

[Ensamblaje del alimentador lateral]
1. Quite la cubierta (1) del alimentador de papel (P).
   (No utilice la cubierta (1).)
2. Recorte las nervaduras con unos alicates de corte y, a continuación, retire la cubierta divisoria (2).

Verfahren
Schalten Sie unbedingt den Hauptschalter des Geräts aus und ziehen Sie den Netzstecker des Geräts von der Netzsteckdose ab, bevor Sie mit der Installation des Papiereinzugs beginnen.

[Seitlicher Einzug]
1. Die Abdeckung (1) des Papiereinzugs (P) abnehmen.
   (Die Abdeckung (1) nicht verwenden.)
2. Die Rippen mit einer Zange schneiden und dann die Ablösungsabdeckung (2) entfernen.

Procedura
Prima di installare l'alimentatore laterale, spegnere la macchina e scollegare la spina dalla presa di corrente a muro.

[Assemblaggio unità di alimentazione laterale]
1. Rimuovere il coperchio (1) dall'unità di alimentazione della carta (P).
   (Non usare il coperchio (1).)
2. Tagliare le pieghe con una pinzetta e poi rimuovere il coperchio di distacco (2).

安装步骤
安装侧供纸盒时，必须先关闭 机器 主机上的主电源开关，并拔出电源插头后方可进行工作。

[侧供纸盒的装配]
1. 拆下供纸工作台（P）的盖板（1）。
   （不使用盖板（1）。）
2. 使用剪钳切断肋板，切除切割盖板（2）。

설치순서
사이드 피더 설치를 시작하기 전에 본체의 주 전원 스위치를 끄고 본체 전원 플러그를 벽 콘센트에서 빼도록 합니다 .

[사이드 피더 조립]
1. 용지 급지대 (P) 의 커버 (1) 을 제거합니다 .
   (커버 (1) 은 사용하지 않습니다 .)
2. 니퍼로 리브를 자르고 분할커버 (2) 를 떼어 냅니다 .

取付手順
サイドフィーダーを設置するときは、必ず機械本体の主電源スイッチを OFF にし、電源プラグを抜いてから作業すること。

[サイドフィーダーの組み立て]
1. ペーパーフィーダー(P)のカバー(1) を取り外す。
   (カバー(1)は使用しません。)
2. ニッパーでリブを切り、割りカバー(2)を切り取る。

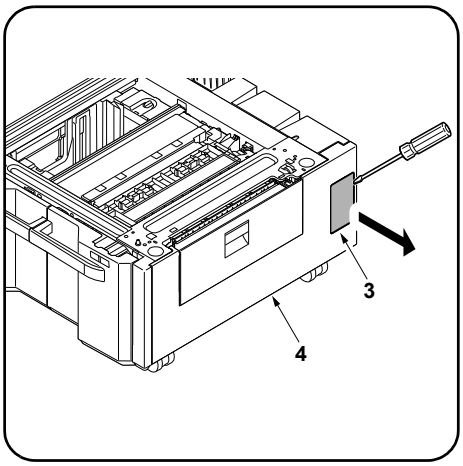

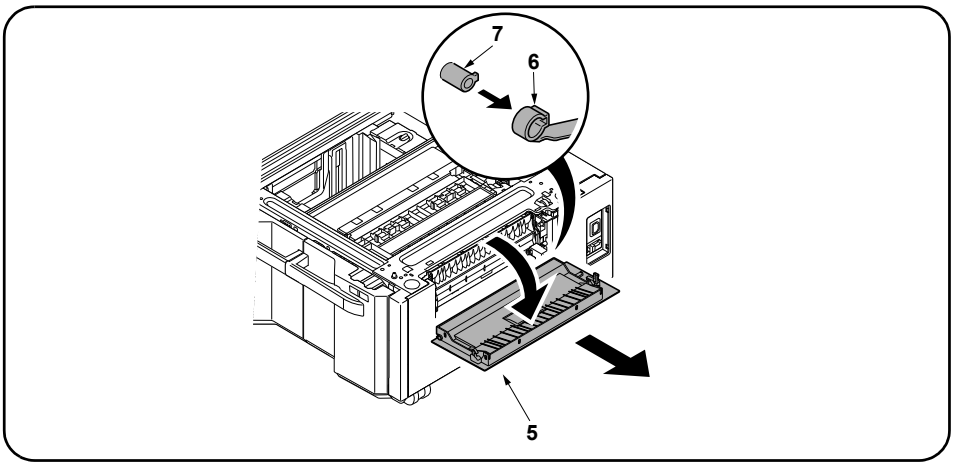

3. Remove the panel (3) from the lower right cover (4) on the paper feeder using a flat blade screwdriver.

4. Open the paper feeder right cover (5).
Remove the strap (6) from the right cover shaft (7) and remove the right cover (5).

---

3. Déposer le panneau (3) du capot inférieur droit (4) du bureau papier en procédant à l'aide d'un tournevis à lame.

4. Ouvrir le couvercle droit du bureau papier (5).
Déposer la courroie (6) de l'axe du capot droit (7) et déposer le capot droit (5).

---

3. Quite el panel (3) de la cubierta derecha inferior (4) del alimentador de papel con un destornillador de pala plana.

4. Abra la cubierta derecha del alimentador de papel (5).
Quite la correa (6) del eje de la cubierta derecha (7) y quite la cubierta derecha (5).

---

3. Nehmen Sie mit einem flachen Schraubendreher die Platte (3) von der unteren rechten Abdeckung (4) des Papiereinzugs ab.

4. Die rechte Abdeckung (5) des Papiereinzugs öffnen.
Nehmen Sie den Riemen (6) von der Welle (7) der rechten Abdeckung und dann die rechte Abdeckung (5) ab.

---

3. Rimuovere il pannello (3) dal coperchio destro inferiore (4) sull'unità di alimentazione carta utilizzando un cacciavite a testa piana.

4. Aprire il coperchio destro (5) dell'unità di alimentazione della carta.
Rimuovere la cinghietta (6) dall'asta (7) del coperchio destro e quindi rimuovere il coperchio destro (5).

---

3. 使用一字螺丝刀等将供纸盒的右下部盖板 (4) 的盖子 (3) 拆下。

4. 打开供纸盒的右部盖板 (5)。
从右盖板的轴 (7) 上拆除挂绳 (6)，拆下右盖板 (5)。

---

3. 용지 급지대의 우측 하단커버 (4) 의 뚜껑 (3) 을 마이너스 드라이버 등으로 떼어 냅니다 .

4. 급지대 우측커버 (5) 를 엽니다 .
스트랩 (6) 을 우측커버의 축 (7) 에서 떼어내고 우측커버 (5) 를 제거합니다 .

---

3. ペーパーフィーダーの右下カバー(4) のふた (3) をマイナスドライバーなどで取る。

4. ペーパーフィーダーの右カバー(5) を開く。
ストラップ (6) を右カバーの軸 (7) から外し、右カバー(5) を取り外す。

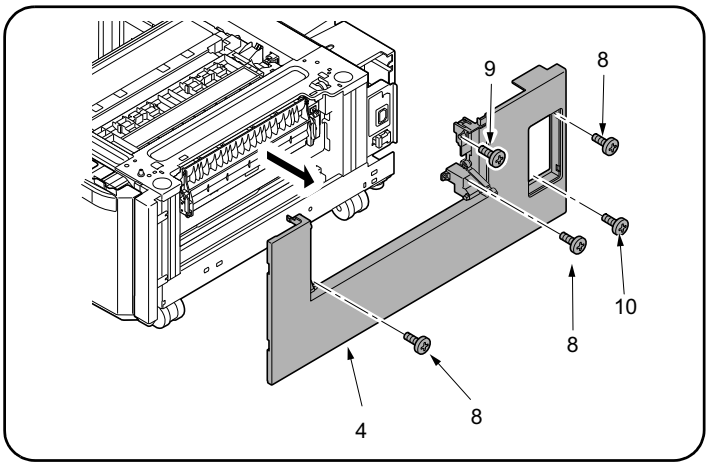

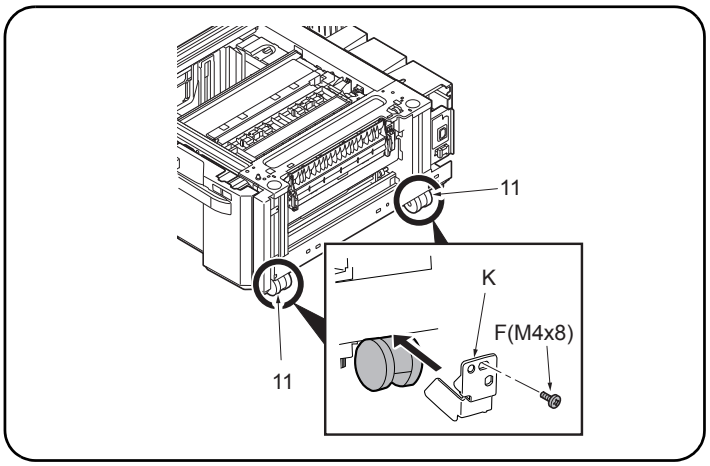

For PF-730

5. Remove 3 screws (8) and a screw (9) and remove the paper feeder lower right cover (4).

For PF-740

5. Remove 3 screws (8) and a screw (10) and remove the paper feeder lower right cover (4).

6. Align the 2 paper feeder casters (11) in the direction shown in the illustration, and fasten each of them to stopper (K) using an M4 × 8 screw (F).

7. Reinstall the paper feeder lower right cover (4).

8. Reinstall the paper feeder right cover (5).

Pour PF-730

5. Déposer les 3 vis (8) et la vis (9) puis déposer le capot inférieur droit du bureau papier (4).

Pour PF-740

5. Déposer les 3 vis (8) et la vis (10) puis déposer le capot inférieur droit du bureau papier (4).

6. Aligner les 2 roulettes (11) du bureau papier selon la direction indiquée sur l'illustration, et les fixer sur la butée (K) à l'aide d'une vis M4 × 8 (F).

7. Reposer le capot inférieur droit du bureau papier (4).

8. Reposer le capot droit du bureau papier (5).

Para PF-730

5. Quite los 3 tornillos (8) y el tornillo (9) y quite la cubierta derecha inferior del alimentador de papel (4).

Para PF-740

5. Quite los 3 tornillos (8) y el tornillo (10) y quite la cubierta derecha inferior del alimentador de papel (4).

6. Alinee las 2 ruedas del alimentador de papel (11) en el sentido que se indica en la ilustración, y apriételas hasta llegar al tope (K) con un tornillo M4 × 8 (F).

7. Reinstale la cubierta derecha inferior del alimentador de papel (4).

8. Reinstale la cubierta derecha del alimentador de papel (5).

Für PF-730

5. Entfernen Sie 3 Schrauben (8) und eine Schraube (9) und nehmen Sie die untere rechte Abdeckung (4) des Papiereinzugs ab.

Für PF-740

5. Entfernen Sie 3 Schrauben (8) und eine Schraube (10) und nehmen Sie die untere rechte Abdeckung (4) des Papiereinzugs ab.

6. Die 2 Laufrollen des Papiereinzugs (11) in der in der Abbildung angezeigten Richtung ausrichten und jede von ihnen mithilfe einer M4 × 8 Schraube (F) am Anschlag (K) befestigen.

7. Bringen Sie die untere rechte Abdeckung (4) des Papiereinzugs wieder an.

8. Bringen Sie die rechte Abdeckung (5) des Papiereinzugs wieder an.

Per PF-730

5. Rimuovere le 3 viti (8) e una vite (9), e quindi rimuovere il coperchio destro inferiore (4) dell'unità di alimentazione carta.

Per PF-740

5. Rimuovere le 3 viti (8) e una vite (10), e quindi rimuovere il coperchio destro inferiore (4) dell'unità di alimentazione carta.

6. Allineare le ruote orientabili dell'unità di alimentazione della carta (11) nella direzione mostrata nell'illustrazione e stringere ognuno al fermo (K) con una vite M4 × 8 (F).

7. Reinstallare il coperchio destro inferiore dell'unità di alimentazione carta (4).

8. Reinstallare il coperchio destro (5) dell'unità di alimentazione carta.

PF-730 时

5. 拆除 3 颗螺丝 (8) 和 1 颗螺丝 (9)，拆下供纸盒的右下部盖板 (4)。

PF-740 时

5. 拆除 3 颗螺丝 (8) 和 1 颗螺丝 (10)，拆下供纸盒的右下部盖板 (4)。

6. 将供纸工作台的 2 个脚轮（11）与图示方向对齐，各使用 1 颗 M4×8 螺丝（F）来安装挡块（K）。

7. 按原样安装供纸盒的右下部盖板 (4)。

8. 按原样安装供纸盒的右盖板 (5)。

PF-730 의 경우

5. 나사 (8) 3 개와 나사 (9) 1 개를 제거하고 , 용지 급지대의 우측 하단커버 (4) 를 제거합니다 .

PF-740 의 경우

5. 나사 (8) 3 개와 나사 (10) 1 개를 제거하고 , 용지 급지대의 우측 하단커버 (4) 를 제거합니다 .

6. 용지 급지대의 캐스터 (11) 2 개를 일러스트의 방향에 맞춰 각각 스토퍼 (K) 를 나사 M4×8 (F) 1 개로 장착합니다 .

7. 용지 급지대의 우측 하단커버 (4) 를 원래대로 장착합니다 .

8. 용지 급지대의 우측커버 (5) 를 원래대로 장착합니다 .

PF-730 の場合

ビス (8)3 本とビス (9)1 本を外して、ペーパーフィーダーの右下カバー (4) を取り外す。

PF-740 の場合

5. ビス (8)3 本とビス (10)1 本を外して、ペーパーフィーダーの右下カバー(4) を取り外す。

6. ペーパーフィーダーのキャスター(11)2 個をイラストの方向に合わせ、それぞれストッパー(K)をビス M4×8(F)1 本で取り付ける。

7. ペーパーフィーダーの右下カバー(4) を元通り取り付ける。

8. ペーパーフィーダーの右カバー(5) を元通り取り付ける。

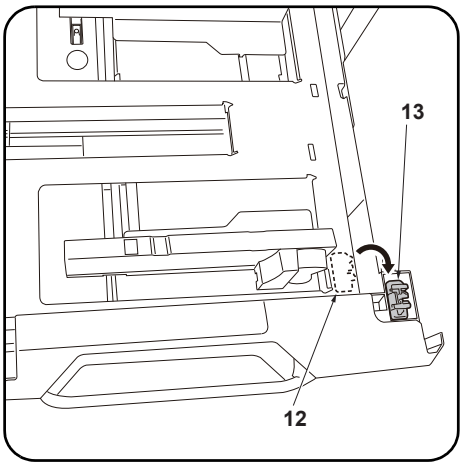

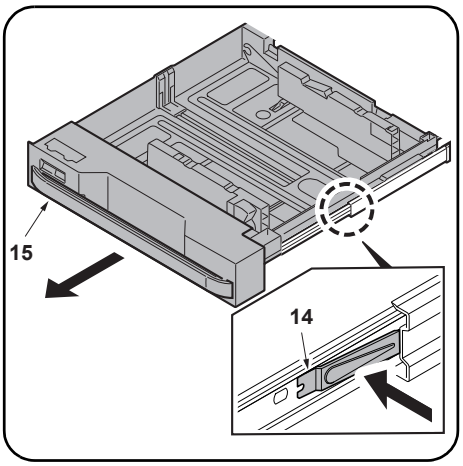

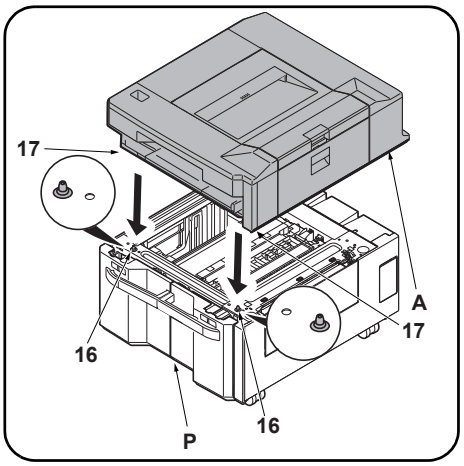

9. Pull out the cassette of the side multi-tray, remove a lift plate stopper (12) and attach it in the storage location (13).

10. Press the release lever(14) and remove the cassette (15) of the side multi-tray (A).

11. Place the side multi-tray on the paper feeder (P) so that each pin (16) on the right and left sides of the front of the paper feeder (P) matches with the holes(17) in the base of the side multi-tray (A).

---

9. Tirer la cassette du bac multiples usages latéral vers l'extérieur, retirer la butée de plaque d'élévation (12) et la fixer à l'emplacement de rangement (13).

10. Appuyez sur le levier de libération (14) et retirez le magasin (15) du bac multiples usages latéral (A).

11. Placer le bac multiples usages latéral sur le bureau papier (P) de sorte à aligner chacune des broches (16) situées sur les côtés droit et gauche du devant du bureau papier (P) avec les orifices(17) de la base du bac multiples usages latéral (A).

---

9. Saque el casete de la multi-bandeja lateral, quite el tope de placa de elevación (12) y póngalo en el espacio reservado para guardarlo (13).

10. Presione sobre la palanca de liberación (14) y quite el depósito (15) del bypass lateral (A).

11. Coloque la multi-bandeja lateral sobre el alimentador de papel (P) de tal manera que los pasadores (16) que se encuentran a izquierda y derecha en la parte delantera del alimentador de papel (P) coincidan con los agujeros(17) que hay en la base de la multi-bandeja lateral (A).

---

9. Die Kassette aus dem seitlichen Mehrzweck-Papierfach herausziehen, den Hebeplattenanschlag (12) entfernen und an der Speicherposition (13) anbringen.

10. Drücken Sie den Freigabehebel (14) und entfernen Sie die Kassette (15) des seitlichen Mehrfacheinzugs (A).

11. Das seitliche Mehrzweck-Papierfach auf dem Papiereinzug (P) so platzieren, dass jeder Stift (16) auf der linken und rechten Vorderseite des Papiereinzugs (P) mit den Öffnungen(17) am Boden des seitlichen Mehrzweck-Papierfachs (A) übereinstimmt.

---

9. Estrarre il cassetto del vassoio multiplo laterale, rimuovere il fermo della piastra di sollevamento (12) e collegarlo nella posizione di stoccaggio (13).

10. Premere la leva di rilascio (14) e rimuovere il cassetto (15) del vassoio multiplo laterale (A).

11. Porre il vassoio multiplo laterale sull'unità di alimentazione della carta (P) in modo che ogni punta (16) a destra e sinistra davanti all'unità di alimentazione della carta (P) corrisponda i fori(17) nella base del vassoio multiplo laterale (A).

---

9. 拉出侧手送纸盘的纸盒，拆除 1 个升降板挡块 (12) 并将其安装到保存场所 (13)。

10. 压住解除杆 (14)，取出侧手送纸盘 (A) 的纸盒 (15)。

11. 将供纸工作台 (P) 左右前方的各插销 (16) 与侧手送纸盘 (A) 的底座的孔 (17) 对齐，将侧手送纸盘 (A) 放在供纸工作台 (P) 上。

---

9. 사이드 멀티 트레이 카세트를 빼 내고 리프트판 스토퍼 (12) 1 개를 빼 내어 보관장소 (13) 에 장착합니다 .

10. 해제 레버 (14) 를 누르고 사이드 멀티 트레이 (A) 의 카세트 (15) 를 제거합니다 .

11. 용지 급지대 (P) 의 좌우전방의 각 핀 (16) 과 사이드 멀티 트레이 (A) 의 베이스 구멍 (17) 이 맞도록 용지 급지대 (P) 에 사이드 멀티 트레이 (A) 를 얹습니다 .

---

9. サイドマルチトレイのカセットを引き出し、リフト板ストッパー(12)1 個を外して保管場所 (13) に取り付ける。

10. 解除レバー(14) を押して、サイドマルチトレイ (A) のカセット (15) を取り外す。

11. ペーパーフィーダー(P) の左右前方の各ピン (16) とサイドマルチトレイ (A) のベースの穴 (17) が合うように、ペーパーフィーダー(P) にサイドマルチトレイ (A) を載せる。

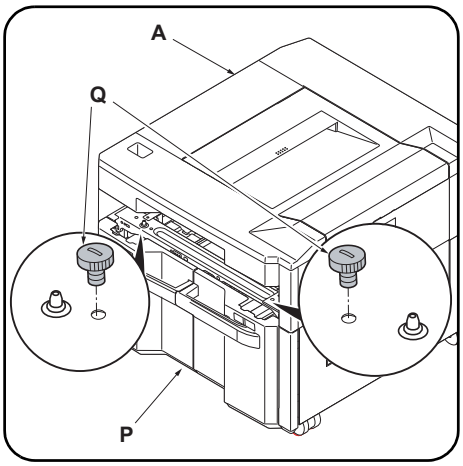

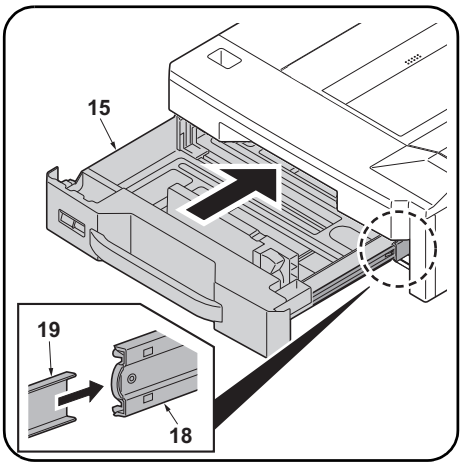

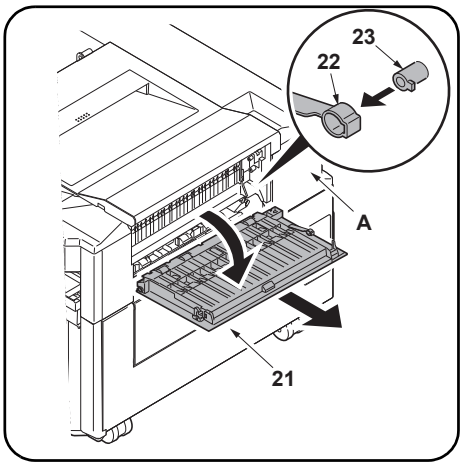

12. Attach side multi-tray (A) to paper feeder (P) using 2 pins (Q).

13. Insert the cassette (15) into the side multi-tray.
Align the cassette slider (19) with the cassette slider (18) and insert the cassette.
14. Push the cassette (15) in fully.

15. Open the right cover (21) of the side multi-tray (A).
16. Remove the strap (22) from the right cover shaft (23) and remove the right cover (21).

---

12. Fixer le bac multiples usages latéral (A) au bureau papier (P) à l'aide de 2 broches (Q).

13. Insérez le magasin (15) dans le bac multiples usages latéral.
Aligner la règle de cassette (19) sur la règle de cassette (18) et insérer la cassette.
14. Renfoncer complètement la cassette (15) .

15. Ouvrir le capot de droite (21) du bac multiples usages latéral (A).
16. Déposer la courroie (22) de l'axe du capot droit (23) et déposer le capot droit (21).

---

12. Sujete la multi-bandeja lateral (A) al alimentador de papel (P) utilizando 2 pasadores (Q).

13. Inserte el depósito (15) en el bypass lateral.
Alinee el deslizador del depósito (19) con el deslizador del depósito (18) e inserte el depósito.
14. Introduzca el depósito (15) hasta el fondo.

15. Abra la cubierta derecha (21) de la multi-bandeja lateral (A).
16. Quite la correa (22) del eje de la cubierta derecha (23) y quite la cubierta derecha(21).

---

12. Das seitliche Mehrzweck-Papierfach (A) mithilfe der 2 Stifte (Q) am Papiereinzug (P) befestigen.

13. Setzen Sie die Kassette (15) in den seitlichen Mehrfacheinzug ein.
Richten Sie die Teleskopschiene (19) an der Teleskopschiene (18) aus und setzen Sie die Kassette hinein.
14. Schieben Sie die Kassette (15) vollständig ins Gerät.

15. Die rechte Abdeckung (21) des seitlichen Mehrzweck-Papierfachs (A) öffnen.
16. Nehmen Sie den Riemen (22) von der Welle (23) der rechten Abdeckung und dann die rechte Abdeckung (21) ab.

---

12. Collegare il vassoio multiplo laterale (A) all'unità di alimentazione della carta (P) utilizzando 2 puntine (Q).

13. Inserire il cassetto (15) nel vassoio multiplo laterale.
Allineare lo scivolo del cassetto (19) con lo scivolo del cassetto (18) e inserire il cassetto.
14. Spingere il cassetto (15) fino in fondo.

15. Aprire il pannello destro (21) del vassoio multiplo laterale (A).
16. Rimuovere la cinghietta (22) dall'asta (23) del coperchio destro e quindi rimuovere il coperchio destro (21).

---

12. 使用 2 枚插销 (Q) 将侧手送纸盘 (A) 固定在供纸工作台 (P) 上。

13. 把纸盒 (15) 插入侧手送纸盘。
对齐纸盒宽度调节板（19）和纸盒宽度调节板（18），然后插入纸盒。
14. 完全推入纸盒 (15)。

15. 打开侧手送纸盘 (A) 的右部盖板（21）。
16. 从右盖板的轴 (23) 上拆除挂绳 (22)，拆下右盖板 (21)

---

12. 핀 (Q) 2 개로 사이드 멀티 트레이 (A) 를 용지 급지대 (P) 에 고정합니다 .

13. 카세트 (15) 를사이드 멀티 트레이에 장착합니다 .
카세트 슬라이더 (19) 를 카세트 슬라이더 (18) 에 맞게 삽입합니다 .
14. 카세트 (15) 를 완전히 밀어 넣습니다 .

15. 사이드 멀티 트레이 (A) 의 우측커버 (21) 를 엽니다 .
16. 스트랩 (22) 을 우측커버의 축 (23) 에서 떼어내고 우측커버 (21) 를 제거합니다 .

---

12. ピン (Q)2 本でサイドマルチトレイ (A) をペーパーフィーダー(P) に固定する。

13. カセット (15) をサイドマルチトレイに挿入する。
カセットスライダー(19) をカセットスライダー(18) に合せて挿入する。
14. カセット (15) を奥まで押し込む。

15. サイドマルチトレイ (A) の右カバー(21)を開く。
16. ストラップ (22) を右カバーの軸 (23) から外し､右カバー(21) を取り外す。

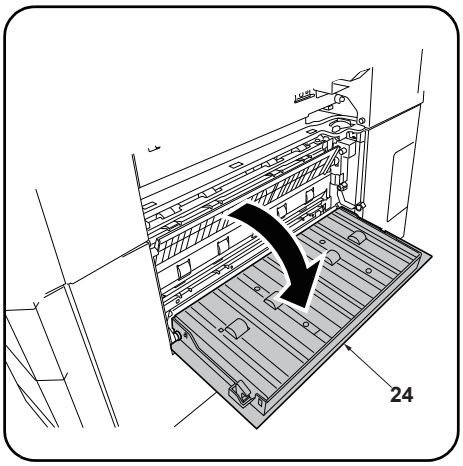

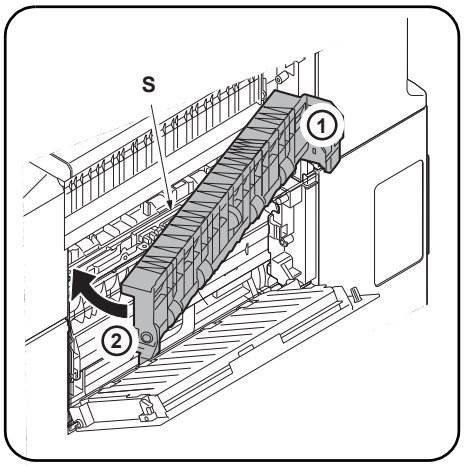

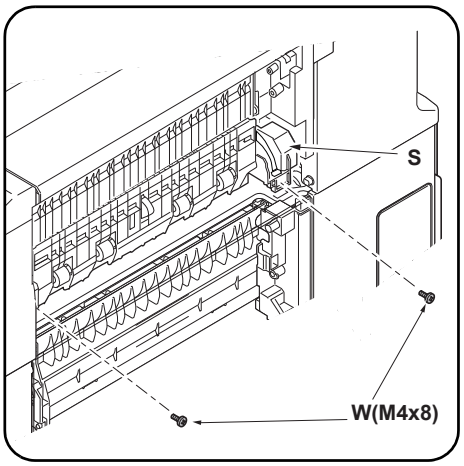

17. Open the paper feeder right cover (24).

18. Insert the intermediate paper conveying unit (S) in order of 1 to 2 on the illustration.

19. Secure the intermediate paper conveying unit (S) with the 2 S Tite screw M4 × 8 (W).

---

17. Ouvrir le couvercle droit du bureau papier (24).

18. Insérer l'unité de transport du papier intermédiaire (S) en suivant l'ordre 1 à 2 indiqué sur l'illustration.

19. Fixer l'unite de transport du papier intermediaire (S) a l'aide des 2 Vis S Tite M4 × 8 (W).

---

17. Abra la cubierta derecha del alimentador de papel (24).

18. Inserte la unidad de transporte de papel intermedia (S) siguiendo el orden de 1 a 2 de la ilustración.

19. Asegure la unidad de transporte de papel intermedia (S) con los 2 Tornillo S Tite M4 × 8 (W)

---

17. Die rechte Abdeckung (24) des Papiereinzugs öffnen.

18. Die eingesetzte Papierfördereinheit (S) in der in der Abbildung gezeigten Reihenfolge 1 bis 2 einbauen.

19. Die eingesetzte Papierfordereinheit (S) mit den 2 S-Tite-Schraube M4 × 8 (W) sichern.

---

17. Aprire il pannello destro (24) dell'unità di alimentazione della carta.

18. Inserire l'unità intermediale di trasporto carta (S) da 1 a 2 sull'illustrazione.

19. Fissare l'unita intermediale di trasporto carta (S) con le 2 Vite S Tite M4 × 8 (W).

---

17. 打开供纸盒的右部盖板 (24)。

18. 将中间搬运单元(S)按如图所示先插入①，再插到②。

19. 使用 2 颗紧固型 S 螺丝 M4 ×8(W) 来固定中间搬运单元 (S)。

---

17. 급지대 우측커버 (24) 를 엽니다 .

18. 중간반송 유니트 (S) 를 일러스트 와 같이 ①, ②의 순으로 삽입합니다 .

19. 나사 M4×8S 타이트 (W) 2 개로 중간반송유니트 (S) 를 고정합니다 .

---

17. ペーパーフィーダーの右カバー(24)を開く。

18. 中間搬送ユニット(S)をイラストのように①から②の順で挿入する。

19. ビス M4×8S タイト (W)2 本で中間搬送ユニット (S) を固定する。

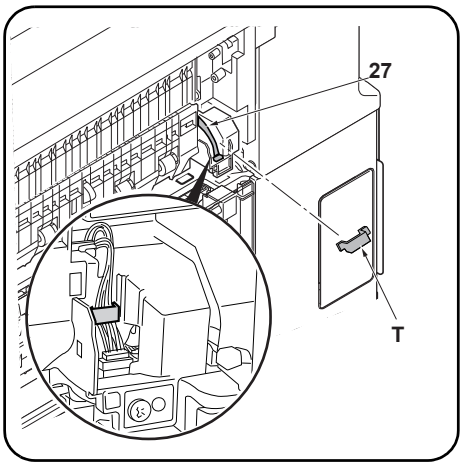

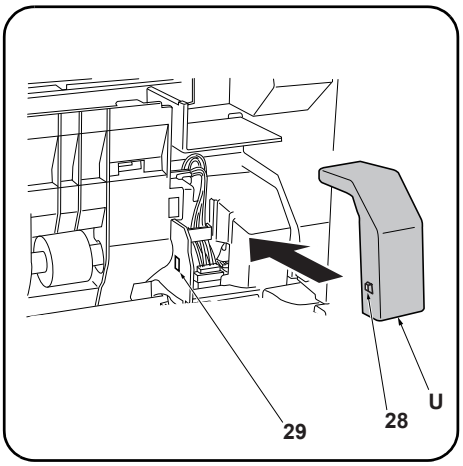

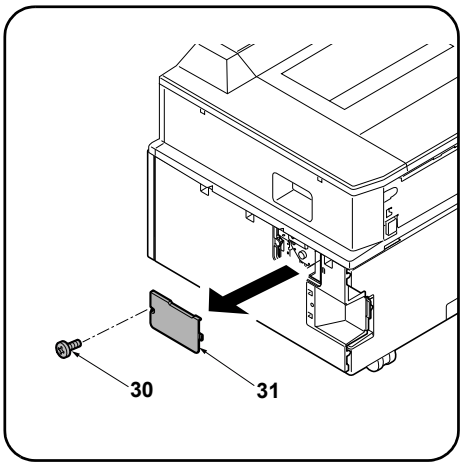

20. Connect the intermediate paper conveying unit connector (27).
21. Attach the clamp (T) and secure the connector wire.

22. Insert the projection (28) of the wire cover (U) into the hole (29) in the intermediate paper conveying unit, and attach the wire cover (U).
23. Replace the right cover (21) of the side multi-tray (A).
24. Close the right cover of the paper feeder (24).

25. Remove the screw (30) in the rear of the paper feeder and remove the cover (31).

---

20. Raccorder le connecteur (27) de l'unité de transport du papier intermédiaire.
21. Monter le collier (T) et fixer le câble du connecteur.

22. Insérer la saillie (28) du couvercle de câble (U) dans l'orifice (29) de l'unité de transport du papier intermédiaire, et fixer le couvercle de câble (U).
23. Remettre le capot de droite (21) du bac multiples usages latéral (A) en place.
24. Fermer le capot de droite du bureau papier (24).

25. Déposer la vis (30) à l'arrière du bureau papier et déposer le couvercle (31).

---

20. Conecte el conector de la unidad de transporte de papel intermedia (27).
21. Fije el sujetador (T) y asegure el cable del conector.

22. Introduzca el resalto (28) de la cubierta para el cable (U) por el agujero (29) de la unidad de transporte de papel intermedia y sujete la cubierta para el cable (U).
23. Sustituya la cubierta derecha (21) de la multibandeja lateral (A).
24. Cierre la cubierta derecha del alimentador de papel (24).

25. Quite el tornillo (30) del lado trasero del alimentador de papel y quite la cubierta (31).

---

20. Den Steckverbinder (27) der eingesetzten Papierfördereinheit anschließen.
21. Die Klemme (T) anbringen und das Kabel des Steckverbinders sichern.

22. Die Nase (28) der Kabelabdeckung (U) in die Öffnung (29) in der eingesetzten Papierfördereinheit einsetzen und die Kabelabdeckung (U) befestigen.
23. Die rechte Abdeckung (21) des seitlichen Mehrzweck-Papierfachs (A) wieder anbringen.
24. Die rechte Abdeckung des Papiereinzugs (24) schließen.

25. Die Schraube (30) an der Rückseite des Papiereinzugs entfernen und die Abdeckung (31) abnehmen.

---

20. Collegare il connettore (27) dell'unità intermediale di trasporto carta.
21. Applicare il morsetto (T) e fissare il cavo del connettore.

22. Inserire la proiezione (28) del coperchio cavi (U) nel foro (29) dell'unità intermediale di trasporto carta e collegare il coperchio cavi (U).
23. Sostituire il pannello destro (21) del vassoio multiplo laterale (A).
24. Chiudere il pannello destro dell'unità di alimentazione della carta (24).

25. Rimuovere la vite (30) nel retro dell'unità di alimentazione della carta e quindi rimuovere il coperchio (31).

---

20. 连接中间搬运单元的接插件 (27)。
21. 安装夹钳 (T)，以固定接插件电线。

22. 将电线盖板 (U) 的突起 (28) 插入中间搬运单元的孔 (29) 中，安装电线盖板 (U)。
23. 按原样安装侧手送纸盘 (A) 的右部盖板 (21)。
24. 关闭供纸工作台的右部盖板 (24)。

25. 拆除供纸盒后部的 1 颗螺丝 (30)，拆下盖板 (31) 。

---

20. 중간반송유니트의 커넥터 (27) 를 접속합니다 .
21. 클램프 (T) 를 부착 , 커넥터 전선을 고정합니다 .

22. 전선커버 (U) 의 돌기 (28) 를 중간반송 유니트의 구멍 (29) 에 넣고 전선커버 (U) 를 장착합니다 .
23. 사이드 멀티 트레이 (A) 의 우측커버 (21) 를 원래대로 장착합니다 .
24. 용지 급지대의 우측커버 (24) 를 닫습니다 .

25. 급지대 후면의 뒤쪽 나사 (30) 1 개를 제거하고 커버 (31) 를 떼어 냅니다 .

---

20. 中間搬送ユニットのコネクター(27) を接続する。
21. クランプ (T) を取り付け、コネクター電線を固定する。

22. 電線カバー(U) の突起 (28) を中間搬送ユニットの穴 (29) に入れて、電線カバー(U) を取り付ける。
23. サイドマルチトレイ (A) の右カバー(21)を元通りに取り付ける。
24. ペーパーフィーダーの右カバー(24)を閉じる。

25. ペーパーフィーダー後側のビス (30)1 本を外し、カバー(31) を取り外す。

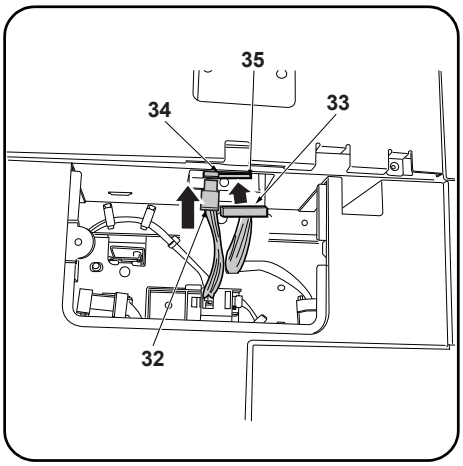

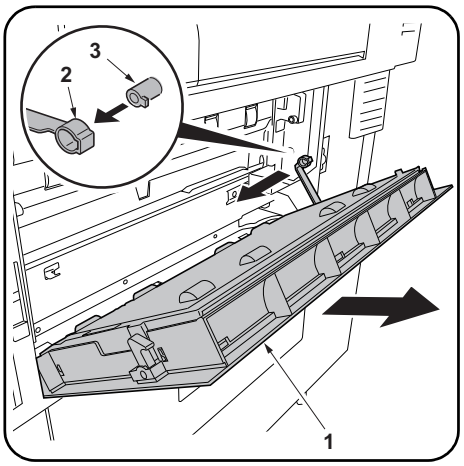

26. Connect the power cord (32) and the signal cable (33) to connectors (34) (35) respectively on the Side multi-tray.

27. Replace the cover (31) using the screw (30) removed in step 26.

[Connecting the side feeder to the machine]
Installation with medium-speed MFPs and printers
If installing on a high-speed MFP, proceed to step 13.
1. Open the lower right cover (1) on the machine.Remove the strap (2) from the shaft (3) and remove lower right cover (1).

---

26. Raccorder respectivement le cordon d'alimentation (32) et le câble à signal (33) aux connecteurs (34) (35) du Bac multiples usages latéral.

27. Reposer le couvercle (31) à l'aide de la vis (30) déposée à l'étape 26.

[Connexion du chargeur latéral à la machine]
Installation avec les imprimantes multifonctions et les imprimantes à vitesse moyenne
Si le montage est fait sur un MFP à grande vitesse, passer à l'étape 13.
1. Ouvrir le capot inférieur droit (1) de la machine. Déposer la courroie (2) de l'arbre (3) et déposer le couvercle inférieur droit (1).

---

26. Conecte el cable de alimentación (32) y el cable de señales (33) a los conectores (34) (35) del Multi-bandeja lateral, respectivamente.

27. Vuelva a colocar la cubierta (31) usando el tornillo (30) quitado en el paso 26.

[Conexión del depósito lateral a la máquina]
Instalación con unidades MFP e impresoras de velocidad media
Si se instala en una MFP de alta velocidad, vaya al paso 13.
1. Abra la cubierta derecha inferior (1) de la máquina. Quite la correa (2) del eje (3) y quite la cubierta frontal inferior (1).

---

26. Das Netzkabel (32) und das Signalkabel (33) an den entsprechenden Steckverbindern (34) (35) des Seitliches Mehrzweck-Papierfach anschließen.

27. Die Abdeckung (31) mittels der in Schritt 26 entfernten Schraube (30) wieder anbringen.

[Anschluss des seitlichen Einzugs am Gerät.]
Installation an mittelschnellen MFPs und Druckern
Gehen Sie zur Installation an einem MFP der Hochleistungsklasse weiter zu Schritt 13.
1. Öffnen Sie die untere rechte Abdeckung (1) des Geräts.
Den Riemen (2) von der Welle (3) abnehmen und dann die untere rechte Abdeckung (1) abnehmen.

---

26. Collegare il cavo di alimentazione (32) e il cavo del segnale (33) rispettivamente ai connettori (34) e (35) sull'vassoio multiplo laterale.

27. Ricollocare il coperchio (31) utilizzando la vite (30) rimossa nel passo 26.

[Collegare l'alimentatore laterale alla macchina.]
Installazione con MFP e stampanti di media velocità
Se si installa su una MFP a velocità alta, procedere al passo 13.
1. Aprire il coperchio destro inferiore (1) sulla macchina.
Rimuovere la cinghietta (2) dall'asta (3) e quindi rimuovere il coperchio destro inferiore (1).

---

26. 将 AC 电线 (32) 以及信号线 (33) 分别与侧手送纸盘的接插件 (34)、(35) 连接。

27. 使用在步骤 26 中拆除的 1 颗螺丝 (30) 按原样安装盖板 (31)。

[侧供纸盒与机器主机的连接]
当安装到中速 MFP 和打印机上时
安装于高速 MFP 上时，进至步骤 13。
1. 打开机器主机的右下部盖板 (1)。
将带子 (2) 从轴 (3) 上拆除，拆下右下部盖板 (1)。

---

26. AC 전선 (32) 및 신호선 (33) 을 사이드 멀티 트레이제 커넥터 (34), (35) 에 각각 접속합니다 .

27. 순서 26 에서 제거한 나사 (30) 1 개로 커버 (31) 를 원래대로 부착합니다 .

[사이드 피더와 본체 연결]
중속 MFP 또는 프린터에 설치하는 경우
고속 MFP 에 설치하는 경우에는 순서 13 로 진행합니다 .
1. 본체의 오른쪽 하단 커버 (1) 를 엽니다 .
스트라프 (2) 를 축 (3) 에서 떼어내 오른쪽 아래 커버 (1) 를 제거합니다 .

---

26. AC 電線 (32) および信号線 (33) をサイドマルチトレイのコネクター(34)、(35) にそれぞれ接続する。

27. 手順 25 で取り外したビス (30)1 本でカバー (31) を元通りに取り付ける。

[サイドフィーダーと機械本体の接続]
中速 MFP またはプリンターに設置の場合
高速 MFP に設置の場合は手順 13 に進む。
1. 機械本体の右下カバー(1) を開く。
ストラップ (2) を軸 (3) から外し、右下カバー(1) を取り外す。

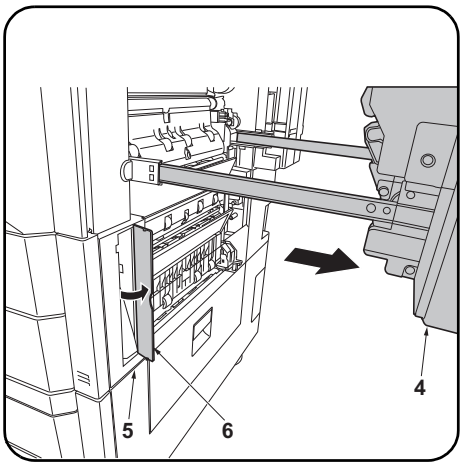

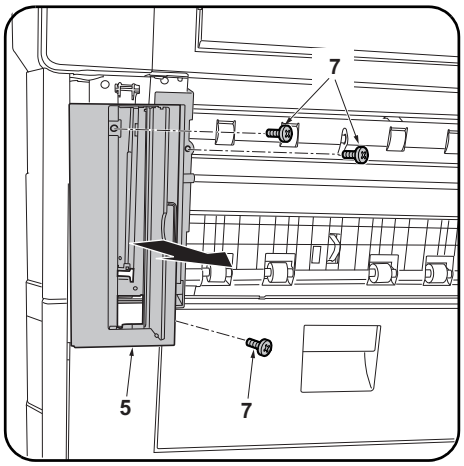

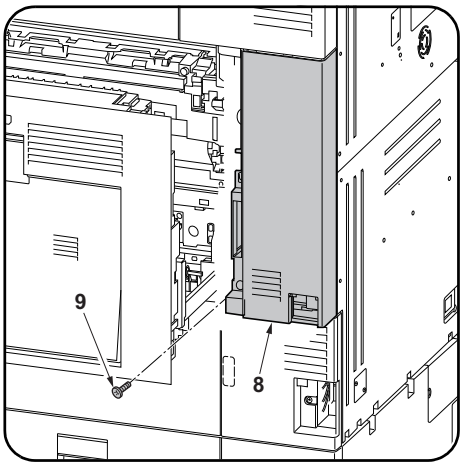

2. Open the machine paper conveying cover (4).
3. Open the panel (6) on the machine front right cover (5).

4. Remove 3 screws (7) and remove the front right cover (5).

5. Remove a screw (9) from the middle right rear cover (8).

---

2. Ouvrir le capot du transport du papier de la machine (4).
3. Ouvrir le panneau (6) sur le capot avant droit de la machine (5).

4. Déposer les 3 vis (7) et déposer le capot avant droit (5).

5. Déposer la vis (9) du capot arrière droit médian (8).

---

2. Abra la cubierta de transporte del papel de la máquina (4).
3. Abra el panel (6) en la cubierta delantera derecha (5) de la máquina.

4. Quite los 3 tornillos (7) y quite la cubierta delantera derecha (5).

5. Quite el tornillo (9) de la cubierta trasera central (8).

---

2. Öffnen Sie die Papiertransportabdeckung (4) des Geräts.
3. Öffnen Sie die Platte (6) der vorderen rechten Abdeckung (5) des Geräts.

4. Entfernen Sie 3 Schrauben (7) und nehmen Sie die vordere rechte Abdeckung (5) ab.

5. Entfernen Sie eine Schraube (9) von der mittleren rechten hinteren Abdeckung (8).

---

2. Aprire il coperchio (4) dell'unità di trasporto carta della macchina.
3. Aprire il pannello (6) sul coperchio destro anteriore (5) della macchina.

4. Rimuovere le 3 viti (7), e quindi rimuovere il coperchio destro posteriore (5).

5. Rimuovere la vite (9) dal coperchio posteriore centrale destro (8).

---

2. 打开机器主机的传输盖板 (4)。
3. 打开机器主机的右前部盖板 (5) 的盖子 (6)。

4. 拆除 3 颗螺丝 (7)，拆下右前部盖板 (5)。

5. 拆除右中后部盖板 (8) 的 1 颗螺丝 (9)。

---

2. 본체의 반송 커버 (4) 를 엽니다 .
3. 본체 오른쪽 전면 커버 (5) 의 패널 (6) 을 엽니다 .

4. 나사 (7) 3 개를 제거하고 우측 전면커버 (5) 를 떼어 냅니다 .

5. 우측 중간 뒷커버 (8) 의 나사 (9) 1 개를 제거합니다 .

---

2. 機械本体の搬送カバー(4) を開く。
3. 機械本体の右前カバー(5) のふた (6) を開く。

4. ビス (7)3 本を外し、右前カバー(5) を取り外す。

5. 右中後カバー(8) のビス (9)1 本を外す。

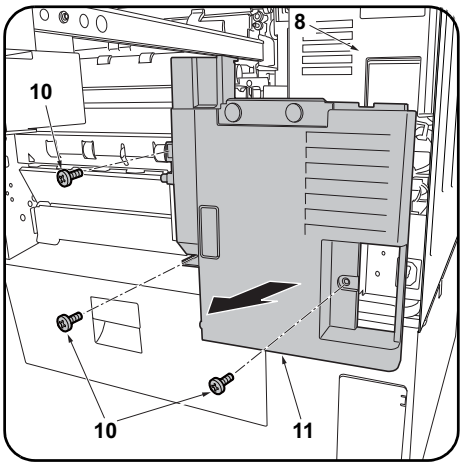

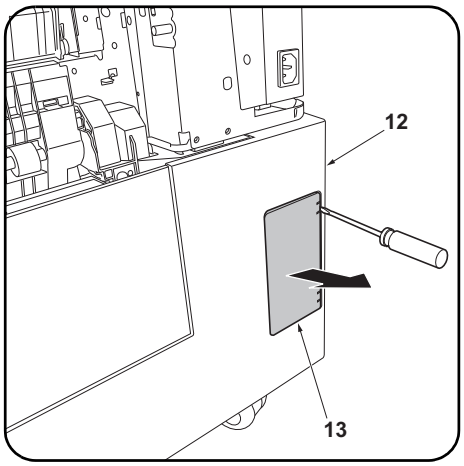

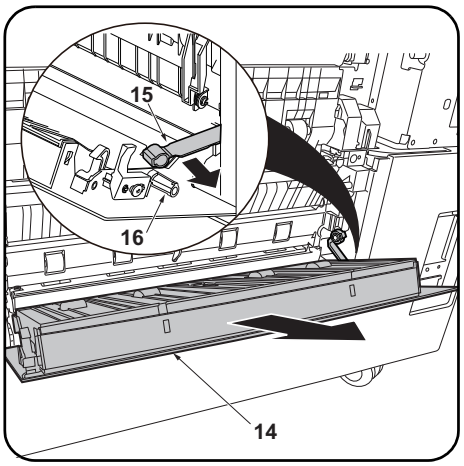

6. Remove 3 screws (10), then lift the bottom of the middle right rear cover (8) and remove the lower right rear cover (11).

7. Remove the panel (13) from the lower right cover (12) on the paper feeder using a flat blade screwdriver.

8. Open the paper feeder right cover (14). Remove the strap (15) from the right cover shaft (16) and remove the right cover (14).

---

6. Déposer les 3 vis (10) puis lever le bas du capot arrière droit médian (8) pour déposer le capot arrière droit inférieur (11).

7. Déposer le panneau (13) du capot inférieur droit (12) du bureau papier en procédant à l'aide d'un tournevis à lame.

8. Ouvrir le couvercle droit du bureau papier (14).
Déposer la courroie (15) de l'axe du capot droit (16) et déposer le capot droit (14).

---

6. Quite los 3 tornillos (10), luego levante la parte inferior de la cubierta trasera central derecha (8) y quite la cubierta trasera inferior derecha (11).

7. Quite el panel (13) de la cubierta derecha inferior (12) del alimentador de papel con un destornillador de pala plana.

8. Abra la cubierta derecha del alimentador de papel (14).
Quite la correa (15) del eje de la cubierta derecha (16) y quite la cubierta derecha (14).

---

6. Entfernen Sie 3 Schrauben (10), heben Sie die mittlere rechte hintere Abdeckung (8) von unten her an und nehmen Sie die untere rechte hintere Abdeckung (11) ab.

7. Nehmen Sie mit einem flachen Schraubendreher die Platte (13) von der unteren rechten Abdeckung (12) des Papiereinzugs ab.

8. Die rechte Abdeckung (14) des Papiereinzugs öffnen.
Nehmen Sie den Riemen (15) von der Welle (16) der rechten Abdeckung und dann die rechte Abdeckung (14) ab.

---

6. Rimuovere le 3 viti (10), quindi sollevare la parte in basso del coperchio posteriore centrale destro (8) e rimuovere il coperchio posteriore inferiore destro (11).

7. Rimuovere il pannello (13) dal coperchio destro inferiore (12) sull'unità di alimentazione carta utilizzando un cacciavite a testa piana.

8. Aprire il coperchio destro (14) dell'unità di alimentazione della carta.
Rimuovere la cinghietta (15) dall'asta (16) del coperchio destro e quindi rimuovere il coperchio destro (14).

---

6. 拆除 3 颗螺丝 (10)，抬起右中后部盖板 (8) 的下部，拆下右下后部盖板 (11)。

7. 使用一字螺丝刀等将供纸盒的右下部盖板 (12) 的盖子 (13) 拆下。

8. 打开供纸盒的右部盖板 (14)。
从右盖板的轴 (16) 上拆除挂绳 (15)，拆下右盖板 (14)。

---

6. 나사 (10) 3 개를 제거하고 우측 하단 뒷커버 (8) 의 하측을 올리고 우측 중간 뒷커버 (11) 를 제거합니다 .

7. 용지 급지대의 우측 하단커버 (12) 의 뚜껑 (13) 을 마이너스 드라이버 등으로 떼어 냅니다 .

8. 급지대 우측커버 (14) 를 엽니다 .
스트랩 (15) 을 우측커버의 축 (16) 에서 떼어 내고 우측커버 (14) 를 제거합니다 .

---

6. ビス (10)3 本を外し、右中後カバー(8) の下側を持ち上げて、右下後カバー(11) を取り外す。

7. ペーパーフィーダーの右下カバー(12) のふた (13) をマイナスドライバーなどで取る。

8. ペーパーフィーダーの右カバー(14) を開く。
ストラップ (15) を右カバーの軸 (16) から外し、右カバー(14) を取り外す。

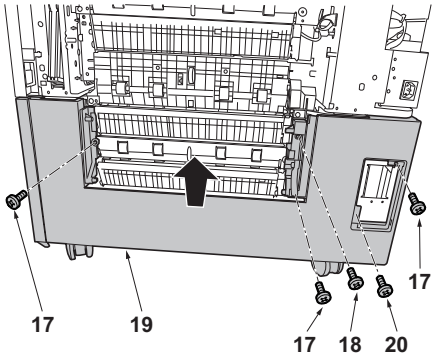

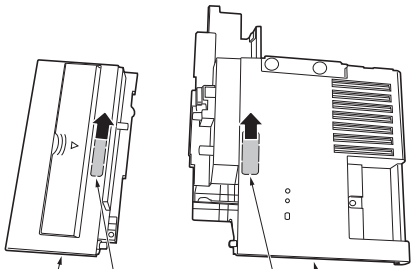

For PF-730

9. Remove 3 screws (17) and a screw (18) and remove the paper feeder lower right cover (19).

For PF-740

9. Remove 3 screws (17) and a screw (20) and remove the paper feeder lower right cover (19).

10. Remove the breakaway cover (21) from the front right cover (5) and the breakaway cover (22) from the lower right rear cover (11).

Pour PF-730

9. Déposer les 3 vis (17) et la vis (18) puis déposer le capot inférieur droit du bureau papier (19).

Pour PF-740

9. Déposer les 3 vis (17) et la vis (20) puis déposer le capot inférieur droit du bureau papier (19).

10. Déposer le couvercle amovible (21) du capot avant droit (5) et le couvercle amovible (22) du capot arrière inférieur droit (11).

Para PF-730

9. Quite los 3 tornillos (17) y el tornillo (18) y quite la cubierta derecha inferior del alimentador de papel (19).

Para PF-740

9. Quite los 3 tornillos (17) y el tornillo (20) y quite la cubierta derecha inferior del alimentador de papel (19).

10. Quite la cubierta divisoria (21) de la cubierta delantera derecha (5) y la cubierta divisoria (22) de la cubierta trasera inferior derecha (11).

Für PF-730

9. Entfernen Sie 3 Schrauben (17) und eine Schraube (18) und nehmen Sie die untere rechte Abdeckung (19) des Papiereinzugs ab.

Für PF-740

9. Entfernen Sie 3 Schrauben (17) und eine Schraube (20) und nehmen Sie die untere rechte Abdeckung (19) des Papiereinzugs ab.

10. Nehmen Sie die Ablösungsabdeckung (21) von der vorderen rechten Abdeckung (5) ab und die Ablösungsabdeckung (22) von der unteren rechten hinteren Abdeckung (11).

Per PF-730

9. Rimuovere le 3 viti (17) e una vite (18), e quindi rimuovere il coperchio destro inferiore (19) dell'unità di alimentazione carta.

Per PF-740

9. Rimuovere le 3 viti (17) e una vite (20), e quindi rimuovere il coperchio destro inferiore (19) dell'unità di alimentazione carta.

10. Rimuovere il coperchio di distacco (21) dal coperchio destro anteriore (5), e il coperchio di distacco (22) dal coperchio posteriore inferiore destro (11).

PF-730 时

9. 拆除 3 颗螺丝（17）和 1 颗螺丝（18），拆下供纸盒的右下部盖板（19）。

PF-740 时

9. 拆除 3 颗螺丝（17）和 1 颗螺丝（20），拆下供纸盒的右下部盖板（19）。

10. 切除右前部盖板（5）的切割盖板（21）和右下后部盖板（11）的切割盖板（22）。

PF-730 의 경우

9. 나사 (17) 3 개와 나사 (18) 1 개를 제거하고 , 용지 급지대의 우측 하단커버 (19) 를 제거합니다 .

PF-740 의 경우

9. 나사 (17) 3 개와 나사 (20) 1 개를 제거하고 , 용지 급지대의 우측 하단커버 (19) 를 제거합니다 .

10. 우측 전면커버 (5) 의 분할커버 (21) 와 오른쪽 하단 뒷커버 (11) 의 분할커버 (22) 를 떼어 냅니다 .

PF-730 の場合

9. ビス（17）3 本とビス（18）1 本を外して、ペーパーフィーダーの右下カバー（19）を取り外す。

PF-740 の場合

9. ビス（17）3 本とビス（20）1 本を外して、ペーパーフィーダーの右下カバー（19）を取り外す。

10. 右前カバー（5）の割りカバー（21）と右下後カバー（11）の割りカバー（22）を切り取る。

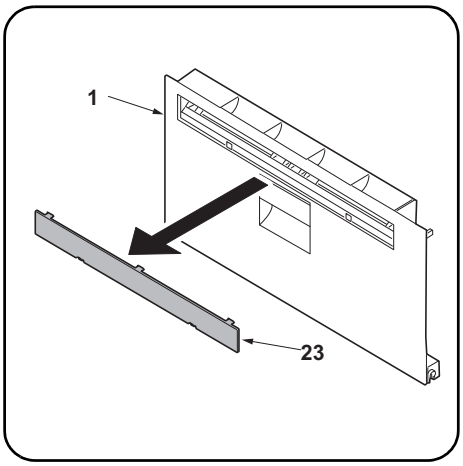

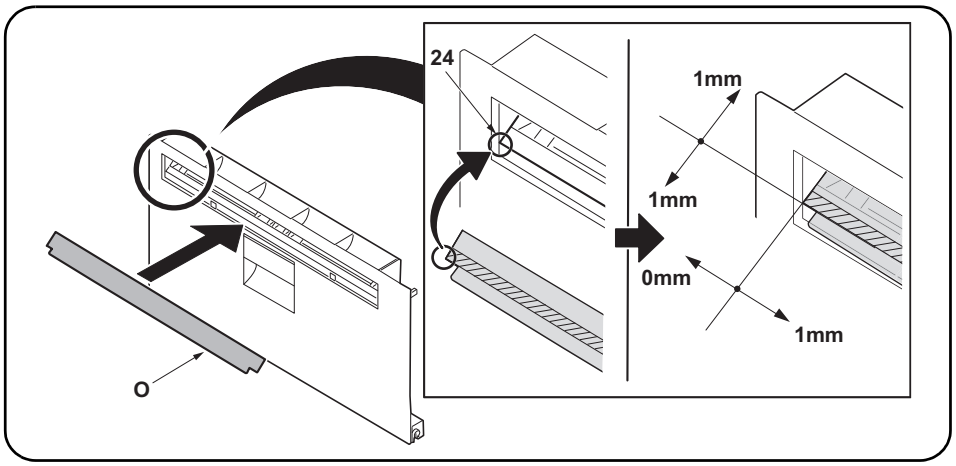

11. Remove the panel (23) from the machine lower right cover (1) with a flat blade screwdriver.

12. After using alcohol to clean place adhering the film, adhere the film (O) in the position (24) indicated in the illustration.
Proceed to step 25.

---

11. Retirer le panneau (23) du capot inférieur droit de la machine (1) à l'aide d'un tournevis à lame plate.

12. Coller le film (O) sur l'emplacement (24) indiqué dans l'illustration, après avoir soigneusement nettoyé cet emplacement à l'alcool.
Passer à l'étape 25.

---

11. Extraiga el panel (23) de la cubierta derecha inferior de la máquina (1) con un destornillador de pala plana.

12. Después de utilizar alcohol para limpiar la zona donde se va a pegar la película, pegue la película (O) en el lugar (24) que se indica en la ilustración.
Vaya al paso 25.

---

11. Nehmen Sie mit einem flachen Schraubendreher die Platte (23) von der unteren rechten Abdeckung (1) des Geräts ab.

12. Zum Anbringen des Films (O) die Stelle zuvor mit Alkohol reinigen und den Film (O) dann in der in der Abbildung angegebenen Position (24) anbringen.
Gehen Sie weiter zu Schritt 25.

---

11. Rimuovere il pannello (23) dal coperchio destro inferiore (1) della macchina con un cacciavite a testa piatta.

12. Dopo aver utilizzato alcol per pulire la piastra che aderisce alla pellicola, far aderire la pellicola (O) nella posizione (24) indicata nell'illustrazione.
Procedere al passo 25.

---

11. 使用一字螺丝刀将机器主机的右下部盖板 (1) 的盖子 (23) 拆下。

12. 使用酒精对薄膜粘贴位置进行清洁后，按插图位置 (24) 粘贴薄膜（0）。
进至步骤 25。

---

11. 일자 드라이버를 사용하여 본체 오른쪽 하단 커버 (1) 에서 패널 (23) 을 제거합니다 .

12. 필름 부착위치를 알코올 청소 후 , 일러스트의 위치 (24) 에 맞춰 필름 (O) 을 부착합니다 .
순서 25 로 진행합니다 .

---

11. 機械本体の右下カバー(1) のふた (23) をマイナスドライバーで取り外す。

12. フィルム貼り付け位置をアルコール清掃後、イラストの位置 (24) にあわせて、フィルム(0)を貼り付ける。
手順 25 に進む。

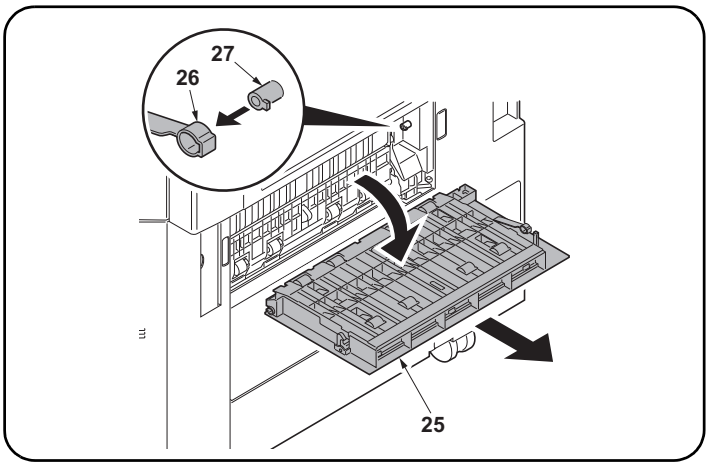

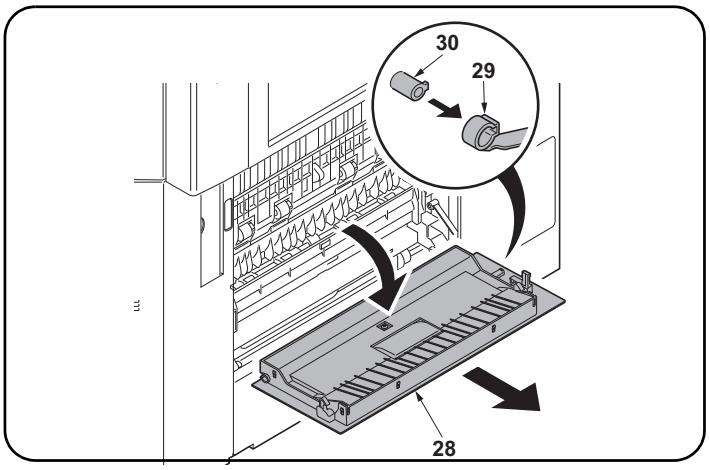

Installation on high-speed MFPs

13. Open the right cover 1 (25) on the machine.
Remove the strap (26) from the shaft (27) and remove right cover 1 (25).

14. Open the right cover 2 (28) on the machine.
Remove the strap (29) from the right cover shaft (30) and remove the right cover 2 (28).

Montage sur des MFP à grande vitesse

13. Ouvrir le capot droit 1 (25) de la machine.
Déposer la courroie (26) de l'arbre (27) et déposer le capot droit 1 (25).

14. Ouvrir le capot droit 2 (28) de la machine.
Déposer la courroie (29) de l'axe du capot droit (30) et déposer le capot droit 2 (28).

Instalación en las MFP de alta velocidad

13. Abra la cubierta derecha 1 (25) de la máquina.
Quite la correa (26) del eje (27) y quite la cubierta derecha 1 (25).

14. Abra la cubierta derecha 2 (28) de la máquina.
Quite la correa (29) del eje de la cubierta derecha (30) y quite la cubierta derecha 2 (28).

Installation an MFP der Hochleistungsklasse

13. Öffnen Sie die rechte Abdeckung 1 (25) des Geräts.
Den Riemen (26) von der Welle (27) abnehmen und dann die rechte Abdeckung 1 (25) abnehmen.

14. Öffnen Sie die rechte Abdeckung 2 (28) des Geräts.
Nehmen Sie den Riemen (29) von der Welle (30) der rechten Abdeckung und dann die rechte Abdeckung 2 (28) ab.

Installazione sulle MFP a velocità alta

13. Aprire il coperchio destro 1 (25) sulla macchina.
Rimuovere la cinghietta (26) dall'asta (27) e quindi rimuovere il coperchio destro 1 (25).

14. Aprire il coperchio destro 2 (28) sulla macchina.
Rimuovere la cinghietta (29) dall'asta (30) del coperchio destro e quindi rimuovere il coperchio destro 2 (28).

安装于高速 MFP 上时

13. 打开机器主机的右部盖板 1(25)。
将带子 (26) 从轴 (27) 上拆除，拆下右部盖板 1(25)。

14. 打开机器主机的右部盖板 2(28)。
从右盖板的轴 (30) 上拆除挂绳 (29)，拆下右盖板 2(28)。

고속 MFP 에 설치하는 경우

13. 본체의 오른쪽 커버 1(25) 을 엽니다 .
스트라프 (26) 를 축 (27) 에서 떼어내 우측커버 1 (25) 를 제거합니다 .

14. 본체의 오른쪽 커버 2(28) 을 엽니다 .
스트랩 (29) 을 우측커버의 축 (30) 에서 떼어내고 우측커버 2 (28) 를 제거합니다 .

高速 MFP に設置の場合

13. 機械本体の右カバー1(25) を開く。
ストラップ (26) を軸 (27) から外し、右カバー1(25) を取り外す。

14. 機械本体の右カバー2(28) を開く。
ストラップ (29) を右カバーの軸 (30) から外し、右カバー2(28) を取り外す。

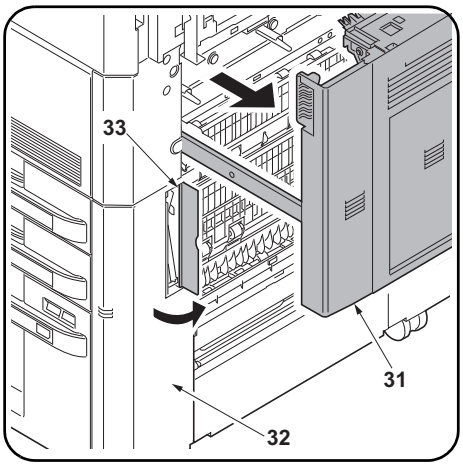

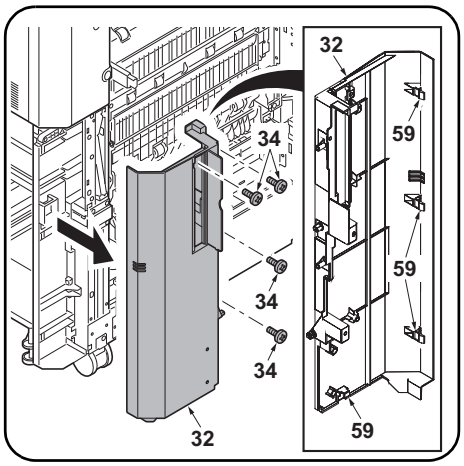

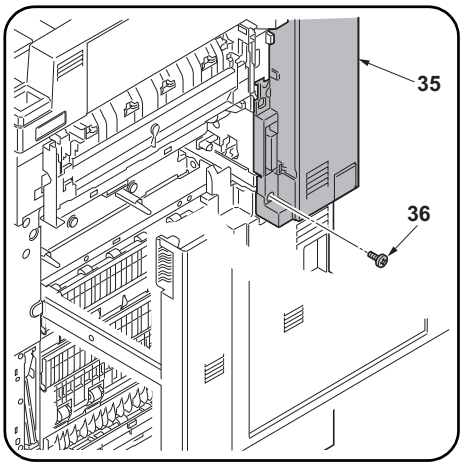

15. Open the machine paper conveying cover (31).
16. Open the panel (33) on the machine front right cover (32).

17. Remove the 4 screws (34) and release the 4 hooks (59). Then remove the front right cover (32).

18. Remove a screw (36) from the middle right rear cover (35).

---

15. Ouvrir le capot du transport du papier de la machine (31).
16. Ouvrir le panneau (33) sur le capot avant droit de la machine (32).

17. Retirer les 4 vis (34) et libérer les 4 crochets (59). Retirer ensuite le capot avant droit (32).

18. Déposer la vis (36) du capot arrière droit médian (35).

---

15. Abra la cubierta de transporte del papel de la máquina (31).
16. Abra el panel (33) en la cubierta delantera derecha (32) de la máquina.

17. Quite los 4 tornillos (34) y libere los 4 ganchos (59). Después, quite la cubierta frontal derecha (32).

18. Quite el tornillo (36) de la cubierta trasera central (35).

---

15. Öffnen Sie die Abdeckung des Papiertransports (31) des Geräts.
16. Öffnen Sie die Platte (33) der vorderen rechten Abdeckung (32) des Geräts.

17. Entfernen Sie die 4 Schrauben (34) und lösen Sie die 4 Haken (59). Danach nehmen Sie die rechte vordere Abdeckung (32) ab.

18. Entfernen Sie eine Schraube (36) von der mittleren rechten hinteren Abdeckung (35).

---

15. Aprire il coperchio (31) dell'unità di trasporto carta della macchina.
16. Aprire il pannello (33) sul coperchio destro anteriore (32) della macchina.

17. Rimuovere le 4 viti (34) e rilasciare i 4 ganci (59). Rimuovere quindi il coperchio anteriore destro (32).

18. Rimuovere la vite (36) dal coperchio posteriore centrale destro (35).

---

15. 打开机器主机的传输盖板 (31)。
16. 打开机器主机的右前部盖板 (32) 的盖子 (33)。

17. 卸下 4 颗螺丝 (34) 并松开 4 个卡扣 (59)。然后卸下右前盖板 (32)。

18. 拆除右中后部盖板 (35) 的 1 颗螺丝 (36)。

---

15. 본체의 반송 커버 (31) 를 엽니다 .
16. 본체 오른쪽 전면 커버 (32) 의 패널 (33) 을 엽니다 .

17. 나사 (34) 4 개를 제거하고 후크 (59) 4 개를 풉니다 . 그런 다음 우측 전면 커버 (32) 를 제거합니다 .

18. 우측 중간 뒷커버 (35) 의 나사 (36) 1 개를 제거합니다 .

---

15. 機械本体の搬送カバー(31) を開く。
16. 機械本体の右前カバー(32) のふた (33) を開く。

17. ビス (34)4 本およびフック (59)4 箇所を外し、右前カバー(32) を取り外す。

18. 右中後カバー(35) のビス (36)1 本を外す。

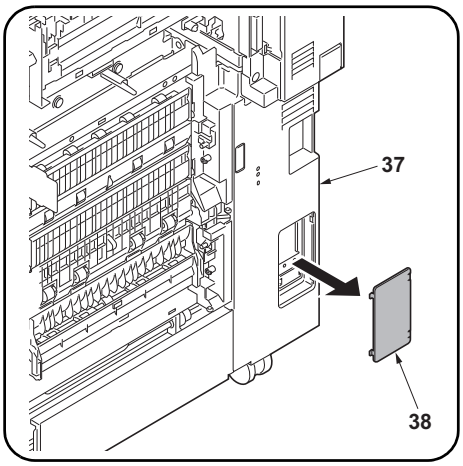

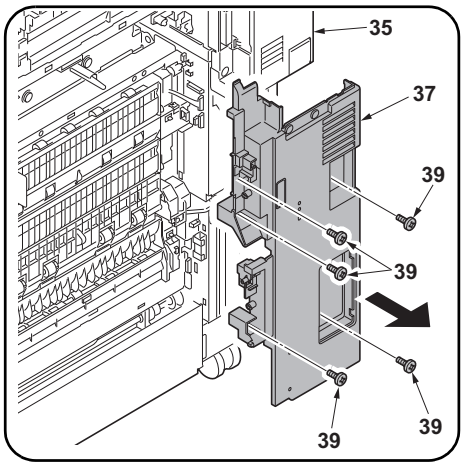

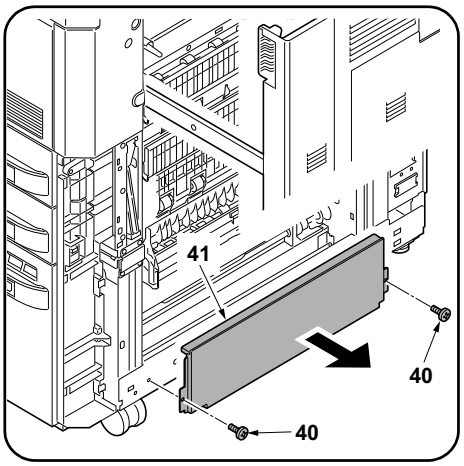

19. Remove the panel (38) from the lower right rear cover (37) with a flat blade screwdriver.

20. Remove 5 screws (39), then lift the bottom of the middle right rear cover (35) and remove the lower right rear cover (37).

21. Remove 2 screws (40) and remove the lower right cover (41).

---

19. Déposer le panneau (38) du capot arrière inférieur droit (37) en procédant à l'aide d'un tournevis à lame.

20. Déposer les 5 vis (39) puis lever le bas du capot arrière droit médian (35) pour déposer le capot arrière droit inférieur (37).

21. Déposer les 2 vis (40) et déposer le capot inférieur droit (41).

---

19. Extraiga el panel (38) de la cubierta trasera inferior derecha (37) con un destornillador de pala plana.

20. Quite los 5 tornillos (39), luego levante la parte inferior de la cubierta trasera central derecha (35) y quite la cubierta trasera inferior derecha (37).

21. Quite los 2 tornillos (40) y quite la cubierta derecha inferior (41).

---

19. Nehmen Sie mit einem flachen Schraubendreher die Platte (38) von der unteren rechten hinteren Abdeckung (37) ab.

20. Entfernen Sie 5 Schrauben (39), heben Sie die mittlere rechte hintere Abdeckung (35) von unten her an und nehmen Sie die untere rechte hintere Abdeckung (37) ab.

21. Entfernen Sie 2 Schrauben (40) und nehmen Sie die untere rechte Abdeckung (41) ab.

---

19. Rimuovere il pannello (38) dal coperchio posteriore inferiore destro (37) con un cacciavite a testa piana.

20. Rimuovere le 5 viti (39), quindi sollevare la parte in basso del coperchio posteriore centrale destro (35) e rimuovere il coperchio posteriore inferiore destro (37).

21. Rimuovere le 2 viti (40), e quindi rimuovere il coperchio destro inferiore (41).

---

19. 用一字螺丝刀等取下右下盖板（37）的盖子（38）。

20. 拆除 5 颗螺丝（39），抬起右中后部盖板（35）的下部，拆下右下后部盖板（37）。

21. 拆除 2 颗螺丝（40），拆下右下部盖板（41）。

---

19. 우측 아래뒷면 커버 (37) 의 뚜껑 (38) 을 마이너스 드라이버 등으로 뜁니다 .

20. 나사 (39) 5 개를 제거하고 우측 하단 뒷커버 (35) 의 하측을 올리고 우측 중간 뒷커버 (37) 를 제거합니다 .

21. 나사 (40) 2 개를 제거하고 우측 하단커버 (41) 를 떼어 냅니다 .

---

19. 右下後カバー(37) のふた (38) をマイナスドライバーなどで取る。

20. ビス (39)5 本を外し、右中後カバー(35) の下側を持ち上げて、右下後カバー(37) を取り外す。

21. ビス (40)2 本を外して、右下カバー(41) を取り外す。

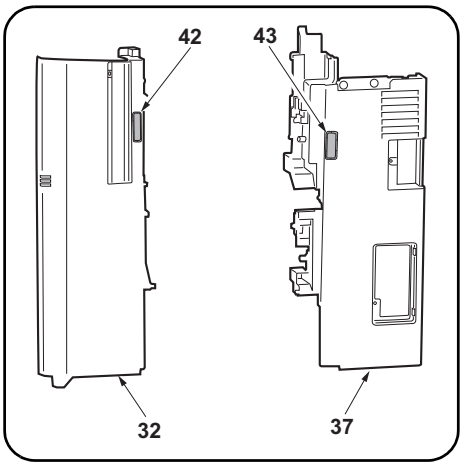

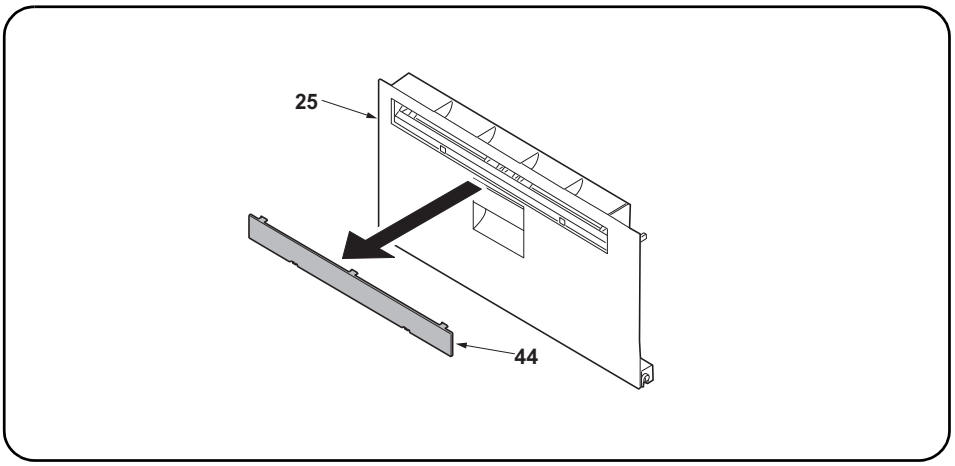

22. Remove the breakaway cover (42) from the front right cover (32) and the breakaway cover (43) from the lower right rear cover (37).

23. Remove the panel (44) from the machine right cover 1 (25) with a flat blade screwdriver.

---

22. Déposer le couvercle amovible (42) du capot avant droit (32) et le couvercle amovible (43) du capot arrière inférieur droit (37).

23. Retirer le panneau (44) du capot droit 1 de la machine (25) à l'aide d'un tournevis à lame plate.

---

22. Quite la cubierta divisoria (42) de la cubierta delantera derecha (32) y la cubierta divisoria (43) de la cubierta trasera inferior derecha (37).

23. Extraiga el panel (44) de la cubierta derecha 1 de la máquina (25) con un destornillador de pala plana.

---

22. Nehmen Sie die Ablösungsabdeckung (42) von der vorderen rechten Abdeckung (32) ab und die Ablösungsabdeckung (43) von der unteren rechten hinteren Abdeckung (37).

23. Nehmen Sie mit einem flachen Schraubendreher die Platte (44) von der rechten Abdeckung 1 (25) des Geräts ab.

---

22. Rimuovere il coperchio di distacco (42) dal coperchio destro anteriore (32), e il coperchio di distacco (43) dal coperchio posteriore inferiore destro (37).

23. Rimuovere il pannello (44) dal coperchio destro 1 (25) della macchina con un cacciavite a testa piatta.

---

22. 切除右前部盖板 (32) 的切割盖板 (42) 和右下后部盖板 (37) 的切割盖板 (43)。

23. 使用一字螺丝刀将机器主机的右部盖板 1 (25) 的盖子 (44) 拆下。

---

22. 우측 전면커버 (32) 의 분할커버 (42) 와 오른쪽 하단 뒷커버 (37) 의 분할커버 (43) 를 떼어 냅니다 .

23. 일자 드라이버를 사용하여 본체 오른쪽 커버 1(25) 에서 패널 (44) 을 제거합니다 .

---

22. 右前カバー(32) の割りカバー(42) と右下後カバー(37) の割りカバー(43) を切り取る。

23. 機械本体の右カバー1(25) のふた (44) をマイナスドライバーで取り外す。

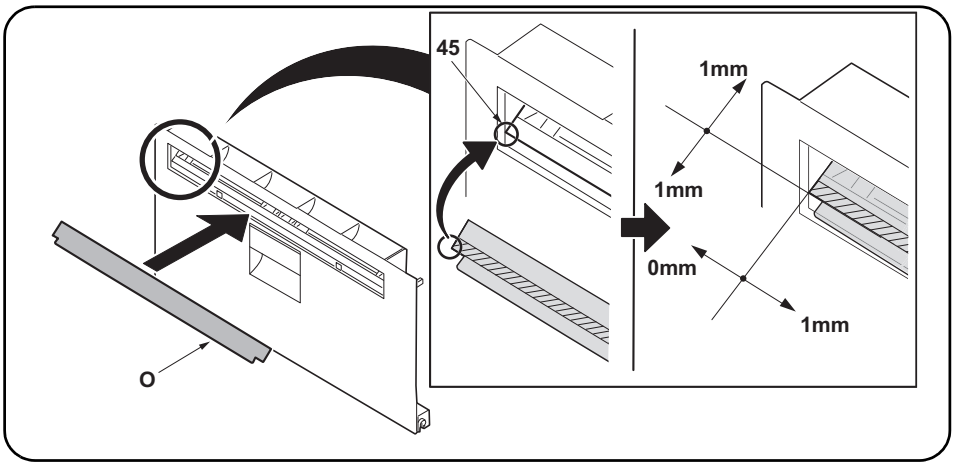

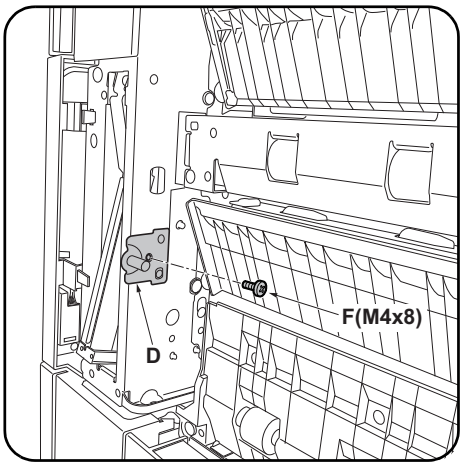

24. After using alcohol to clean place adhering the film, adhere the film (O) in the position (45) indicated in the illustration.

25. Install a lock pin (D) on the front right of the machine using an M4 × 8 screw (F).

---

24. Coller le film (O) sur l'emplacement (45) indiqué dans l'illustration, après avoir soigneusement nettoyé cet emplacement à l'alcool.

25. Monter une broche de verrouillage (D) sur l'avant droit de la machine à l'aide d'une vis M4 × 8 (F).

---

24. Después de utilizar alcohol para limpiar la zona donde se va a pegar la película, pegue la película (O) en el lugar (45) que se indica en la ilustración.

25. Instale una clavija de bloqueo (D) en la parte derecha frontal de la máquina usando un tornillo M4 × 8 (F).

---

24. Zum Anbringen des Films (O) die Stelle zuvor mit Alkohol reinigen und den Film (O) dann in der in der Abbildung angegebenen Position (45) anbringen.

25. Bringen Sie mit einer M4 × 8 Schraube (F) den Arretierungsstift (D) vorne rechts am Gerät an.

---

24. Dopo aver utilizzato alcol per pulire la piastra che aderisce alla pellicola, far aderire la pellicola (O) nella posizione (45) indicata nell'illustrazione.

25. Installare un perno di blocco (D) sul lato destro anteriore della macchina utilizzando una vite M4 × 8 (F).

---

24. 使用酒精对薄膜粘贴位置进行清洁后，按插图位置（45）粘贴薄膜（O）。

25. 使用 1 颗 M4×8 螺丝（F）将锁定插销（D）安装到机器主机的右前侧。

---

24. 필름 부착위치를 알코올 청소 후 , 일러스트의 위치 (45) 에 맞춰 필름 (O) 을 부착합니다 .

25. M4 × 8 나사 (F) 를 사용하여 잠금 핀 (D) 을 본체의 오른쪽 전면에 설치합니다 .

---

24. フィルム貼り付け位置をアルコール清掃後、イラストの位置(45)にあわせて、フィルム(O)を貼り付ける。

25. ビス M4×8(F)1 本で、ロックピン（D）を機械本体右前側に取り付ける。

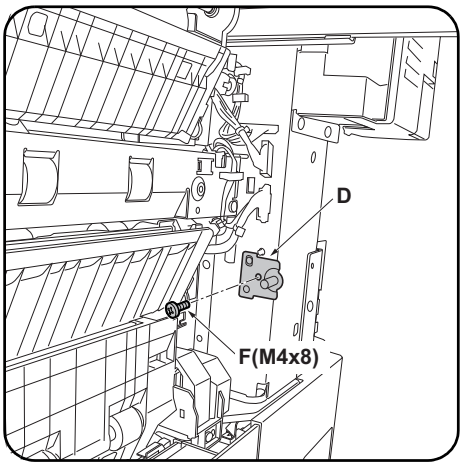

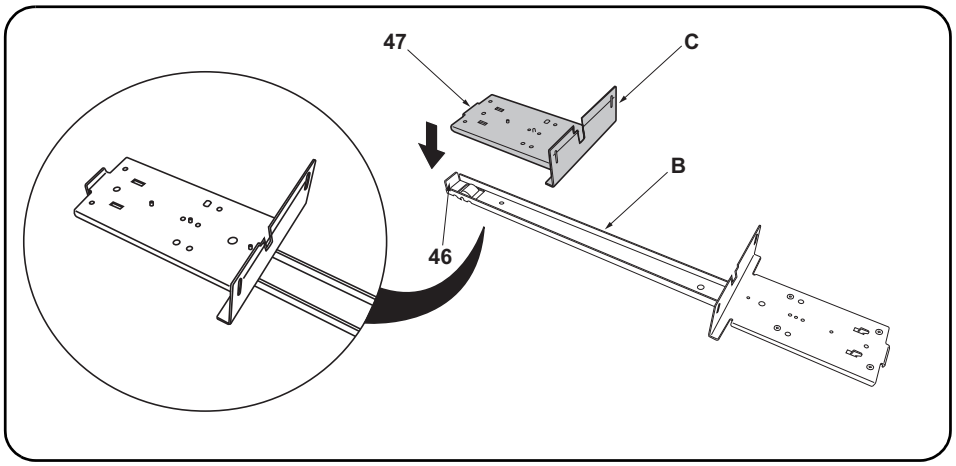

26. Install a lock pin (D) on the rear right of the machine using an M4 × 8 screw (F) in the same way.

27. Place the small base slider (C) on the large base slider (B). Place so that the bend (47) on the small base slider (C) abuts inside the rest (46) at the end of the large base slider (B).

---

26. Monter une broche de verrouillage (D) sur l'arrière droit de la machine de la même manière à l'aide d'une vis M4 × 8 (F).

27. Placer la petite règle de base (C) sur la grande règle de base (B). Disposer la petite règle de base (C) de sorte que son extrémité repliée (47) s'encastre dans la butée (46) à l'extrémité de la grande règle de base (B).

---

26. Instale una clavija de bloqueo (D) en la parte derecha posterior de la máquina usando un tornillo M4 × 8 (F).

27. Coloque el deslizador de base pequeño (C) sobre el deslizador de base grande (B). Haga que la dobladura (47) del deslizador de base pequeño (C) quede en el interior del apoyo (46) del extremo del deslizador de base grande (B).

---

26. Bringen Sie auf gleiche Weise mit einer M4 × 8 Schraube (F) den Arretierungsstift (D) hinten rechts am Gerät an..

27. Setzen Sie den kleinen Basis-Schieber (C) auf den großen Basis-Schieber (B). Setzen Sie ihn so auf, dass die Biegung (47) am kleinen Basis-Schieber (C) innerhalb der Auflage (46) am Ende des großen Basis-Schiebers (B) anliegt.

---

26. Analogamente, installare un perno di blocco (D) sul lato destro posteriore della macchina utilizzando una vite M4 × 8 (F).

27. Posizionare lo scivolo di base piccolo (C) sullo scivolo di base grande (B). Posizionare in modo che la piegatura (47) sullo scivolo di base piccolo (C) si attesti all'interno del sostegno (46) all'estremità dello scivolo di base grande (B).

---

26. 按相同方法，使用 1 颗 M4×8 螺丝 (F) 将锁定插销 (D) 安装到机器主机的右后侧。

27. 将底座滑板（小）(C) 放在底座滑板（大）(B)。此时底座滑板（小）(C) 的弯曲部 (47) 应处于底座滑板（大）(B) 的前端折弯部 (46) 的内侧。

---

26. 같은 방식으로 M4 × 8 나사 (F) 를 사용하여 잠금 핀 (D) 을 본체의 오른쪽 뒷면에 설치합니다 .

27. 베이스 슬라이더 대 (B) 의 위에 베이스 슬라이더 소 (C) 를 얹습니다 . 그 때 , 베이스 슬라이더 소 (C) 의 곡선부 (47) 가 베이스 슬라이더 대 (B) 의 맨 앞쪽의 꺾이고 구부러진 부분 (46) 의 안쪽으로 오도록 세트합니다 .

---

26. 同様にビス M4×8(F) 1 本で、ロックピン (D) を機械本体右後側に取り付ける。

27. ベーススライダー大 (B) の上にベーススライダー小 (C) を乗せる。その際、ベーススライダー小 (C) の曲げ (47) がベーススライダー大 (B) の先端折り曲げ部 (46) の内側にくるようにセットする。

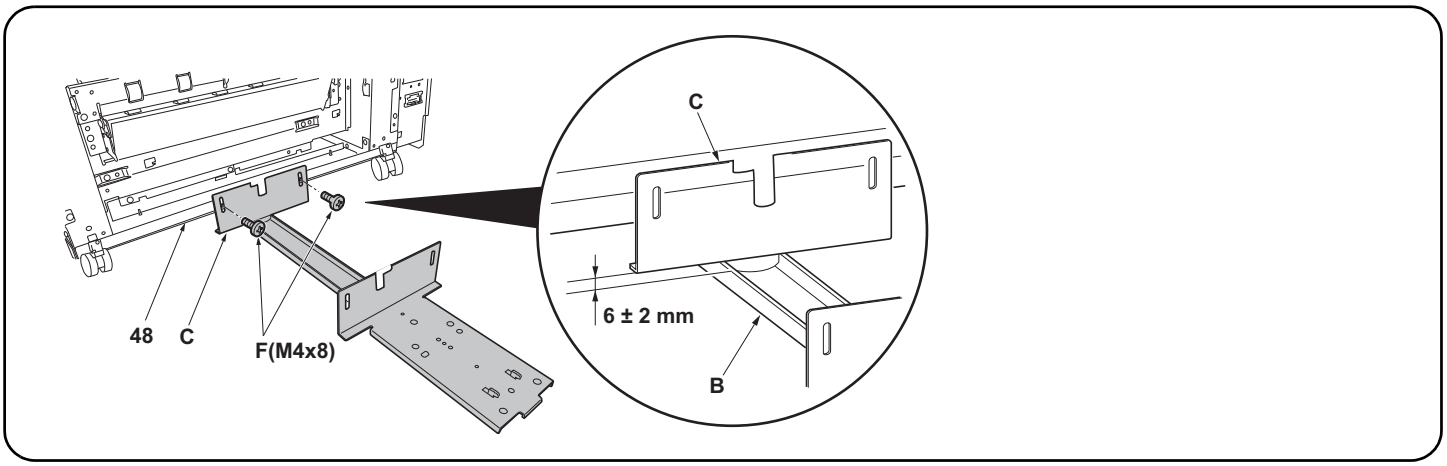

28. Insert the small base slider (C) under the machine. Install to the base (48) using 2 M4 × 8 screws (F) so that the gap between the small base slider (C) and the large base slider (B) is 6 ± 2 mm.
* For PF-730, install to the screw holes marked “R”.

---

28. Insérer la petite règle de base (C) sous l'appareil. Fixer à la base (48) à l'aide de 2 vis M4 × 8 (F) de sorte que l'interstice entre la petite règle de base (C) et la grande règle de base (B) soit de 6 ± 2 mm.
* Pour le PF-730, fixer aux trous de vis marqués "R".

---

28. Introduzca el deslizador de base pequeño (C) por debajo de la máquina. Instálelo en la base (48) usando 2 tornillos M4 × 8 (F) de modo que el espacio entre el deslizador de base pequeño (C) y el deslizador de base grande (B) sea de 6 ± 2 mm.
* En el caso de PF-730, instale en los orificios para tornillo “R”.

---

28. Setzen Sie die Führungsschiene (C) unter das Gerät. Befestigen Sie sie mit zwei M4 × 8 Schrauben (F) so an der Basis (48), dass der Abstand zwischen der kleinen Führungsschiene (C) und der großen Führungsschiene (B) 6 ± 2 mm beträgt.
* Bei Modell PF-730 an den mit "R" markierten Schraublöchern befestigen.

---

28. Inserire lo scivolo di base piccolo (C) sotto la macchina. Installare sulla base (48) utilizzando 2 viti M4 × 8 (F) in modo che lo spazio tra lo scivolo di base piccolo (C) e lo scivolo di base grande (B) sia di 6 ± 2 mm.
* Per PF-730, installare ai fori per viti segnalati con “R”.

---

28. 将底座滑板（小）(C) 插入机器主机侧的供纸工作台的下方。使用 2 颗 M4×8(F) 螺丝将底座滑板（小）(C) 安装到底板 (48) 上，确保底座滑板（小）(C) 与底座滑板（大）(B) 之间的间隙为 6±2mm。
※PF-730 时，安装到带有 R 刻印的螺纹孔上。

---

28. 소형 베이스 슬라이더 (C) 를 본체 하단에 삽입합니다 . 소형 베이스 슬라이더 (C) 와 대형 베이스 슬라이더 (B) 사이의 틈이 6 ± 2 mm 가 되도록 M4 × 8 나사 (F) 2 개를 사용하여 바닥판 (48) 에 장착합니다 .
※PF-730 은 R 의 각인이 있는 나사구멍에 장착합니다 .

---

28. ベーススライダー小 (C) を機械本体側のペーパーフィーダーの下に入れる。ベーススライダー小 (C) とベーススライダー大 (B) の隙間が、6±2mm になるようにビス M4×8(F)2 本で底板 (48) に取り付ける。
※PF-730 は R の刻印のあるビス穴に取り付ける。

Installation with medium-speed MFPs and printers
If installing on a high-speed MFP, proceed to step 35.
29. Reinstall the paper feeder lower right cover (19).
30. Reinstall the paper feeder right cover (14).
31. Reinstall the lower right rear cover (11).
32. Mount a screw (9) in the middle right rear cover (8).
33. Reinstall the front right cover (5).
34. Reinstall the lower right cover (1).
Proceed to step 41.

Installation avec les imprimantes multifonctions et les imprimantes à vitesse moyenne
Si le montage est fait sur un MFP à grande vitesse, passer à l'étape 35.
29. Reposer le capot inférieur droit du bureau papier (19).
30. Reposer le capot droit du bureau papier (14).
31. Reposer le capot arrière inférieur droit (11).
32. Fixer la vis (9) sur le capot arrière médian droit (8).
33. Reposer le capot avant droit (5).
34. Reposer le capot inférieur droit (1).
Passer à l'étape 41.

Instalación con unidades MFP e impresoras de velocidad media
Si se instala en una MFP de alta velocidad, vaya al paso 35.
29. Reinstale la cubierta derecha inferior del alimentador de papel (19).
30. Reinstale la cubierta derecha del alimentador de papel (14).
31. Reinstale la cubierta trasera inferior derecha (11).
32. Instale el tornillo (9) en la cubierta trasera central derecha (8).
33. Reinstale la cubierta delantera derecha (5).
34. Reinstale la cubierta derecha inferior (1).
Vaya al paso 41.

Installation an mittelschnellen MFPs und Druckern
Gehen Sie zur Installation an einem MFP der Hochleistungsklasse weiter zu Schritt 35.
29. Bringen Sie die untere rechte Abdeckung (19) des Papiereinzugs wieder an.
30. Bringen Sie die rechte Abdeckung (14) des Papiereinzugs wieder an.
31. Bringen Sie die untere rechte hintere Abdeckung (11) wieder an.
32. Befestigen Sie eine Schraube (9) an der mittleren rechten hinteren Abdeckung (8).
33. Bringen Sie die vordere rechte Abdeckung (5) wieder an.
34. Bringen Sie die untere rechte Abdeckung (1) wieder an.
Gehen Sie weiter zu Schritt 41.

Installazione con MFP e stampanti di media velocità
Se si installa su una MFP a velocità alta, procedere al passo 35.
29. Reinstallare il coperchio destro inferiore dell'unità di alimentazione carta (19).
30. Reinstallare il coperchio destro (14) dell'unità di alimentazione carta.
31. Reinstallare il coperchio posteriore inferiore destro (11).
32. Montare la vite (9) nel coperchio posteriore centrale destro (8).
33. Reinstallare il coperchio destro anteriore (5).
34. Reinstallare il coperchio destro inferiore (1).
Procedere al passo 41.

当安装到中速 MFP 和打印机上时
安装于高速 MFP 上时，进至步骤 35。
29. 按原样安装供纸盒的右下部盖板 (19)。
30. 按原样安装供纸盒的右盖板 (14)。
31. 按原样安装右下后部盖板 (11)。
32. 安装右中后部盖板 (8) 的 1 颗螺丝 (9)。
33. 按原样安装右前部盖板 (5)。
34. 按原样安装右下部盖板 (1)。
进至步骤 41。

중속 MFP 또는 프린터에 설치하는 경우
고속 MFP 에 설치하는 경우에는 순서 35 로 진행합니다 .
29. 용지 급지대의 우측 하단커버 (19) 를 원래대로 장착합니다 .
30. 용지 급지대의 우측커버 (14) 를 원래대로 장착합니다 .
31. 우측하단 뒷커버 (11) 를 원래대로 장착합니다 .
32. 우측 중간 뒷커버 (8) 의 나사 (9) 1 개를 장착합니다 .
33. 우측 전면커버 (5) 를 원래대로 장착합니다 .
34. 우측 하단커버 (1) 를 원래대로 장착합니다 .
순서 41 로 진행합니다 .

中速 MFP またはプリンターに設置の場合
高速 MFP に設置の場合は手順 35 に進む。
29. ペーパーフィーダーの右下カバー(19) を元通り取り付ける。
30. ペーパーフィーダーの右カバー(14) を元通り取り付ける。
31. 右下後カバー(11) を元通り取り付ける。
32. 右中後カバー(8) のビス (9)1 本を取り付ける。
33. 右前カバー(5) を元通り取り付ける。
34. 右下カバー(1) を元通り取り付ける。
手順 41 に進む。

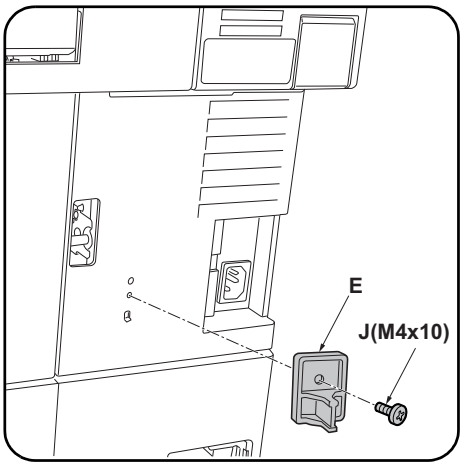

Installation on high-speed MFPs

35. Reinstall the lower right cover (41).
36. Reinstall the lower right rear cover (37).
37. Mount a screw (36) in the middle right rear cover (35).
38. Reinstall the front right cover (32).
39. Reinstall the right cover 2 (28).
40. Reinstall the right cover 1 (25).
41. Install the switch press plate (E) using the M4 × 10 tapping screw (J).

Montage sur des MFP à grande vitesse

35. Reposer le capot inférieur droit (41).
36. Reposer le capot arrière inférieur droit (37).
37. Fixer la vis (36) sur le capot arrière médian droit (35).
38. Reposer le capot avant droit (32).
39. Reposer le capot droit 2 (28).
40. Reposer le capot droit 1 (25).
41. Fixer la plaque de pression du contacteur (E) à l'aide d'une vis de connexion M4 × 10 (J).

Instalación en las MFP de alta velocidad

35. Reinstale la cubierta derecha inferior (41).
36. Reinstale la cubierta trasera inferior derecha (37).
37. Instale el tornillo (36) en la cubierta trasera central derecha (35).
38. Reinstale la cubierta delantera derecha (32).
39. Reinstale la cubierta derecha 2 (28).
40. Reinstale la cubierta derecha 1 (25).
41. Instale la placa de presión del interruptor (E) usando el tornillo de roscado M4 × 10 (J).

Installation an MFP der Hochleistungsklasse

35. Bringen Sie die untere rechte Abdeckung (41) wieder an.
36. Bringen Sie die untere rechte hintere Abdeckung (37) wieder an.
37. Befestigen Sie eine Schraube (36) an der mittleren rechten hinteren Abdeckung (35).
38. Bringen Sie die vordere rechte Abdeckung (32) wieder an.
39. Bringen Sie die rechte Abdeckung 2 (28) wieder an.
40. Bringen Sie die rechte Abdeckung 1 (25) wieder an.
41. Befestigen Sie mit der M4 × 10 Schneidschraube (J) die Schalterdruckplatte (E).

Installazione sulle MFP a velocità alta

35. Reinstallare il coperchio destro inferiore (41).
36. Reinstallare il coperchio posteriore inferiore destro (37).
37. Montare la vite (36) nel coperchio posteriore centrale destro (35).
38. Reinstallare il coperchio destro anteriore (32).
39. Reinstallare il coperchio destro 2 (28).
40. Reinstallare il coperchio destro 1 (25).
41. Installare la piastra spingi interruttore (E) utilizzando la vite autofilettante M4 × 10 (J).

安装于高速 MFP 上时

35. 按原样安装右下部盖板 (41)。
36. 按原样安装右下后部盖板 (37)。
37. 安装右中后部盖板 (35) 的 1 颗螺丝 (36)。
38. 按原样安装右前部盖板 (32)。
39. 按原样安装右部盖板 2(28)。
40. 按原样安装右部盖板 1(25)。
41. 使用 1 颗 M4×10 自攻螺丝 (J) 安装开关挡板 (E)。

고속 MFP 에 설치하는 경우

35. 우측 하단커버 (41) 를 원래대로 장착합니다 .
36. 우측하단 뒷커버 (37) 를 원래대로 장착합니다 .
37. 우측 중간 뒷커버 (35) 의 나사 (36) 1 개를 장착합니다 .
38. 우측 전면커버 (32) 를 원래대로 장착합니다 .
39. 우측커버 2 (28) 를 원래대로 장착합니다 .
40. 우측커버 1 (25) 를 원래대로 장착합니다 .
41. 탑핑나사 M4×10(J) 1 개로 스위치 판 (E) 을 장착합니다 .

高速 MFP に設置の場合

35. 右下カバー(41) を元通り取り付ける。
36. 右下後カバー(37) を元通り取り付ける。
37. 右中後カバー(35) のビス (36)1 本を取り付ける。
38. 右前カバー(32) を元通り取り付ける。
39. 右カバー2 (28) を元通り取り付ける。
40. 右カバー1 (25) を元通り取り付ける。
41. タッピングビス M4×10(J)1 本でスイッチ当たり板 (E) を取り付ける。

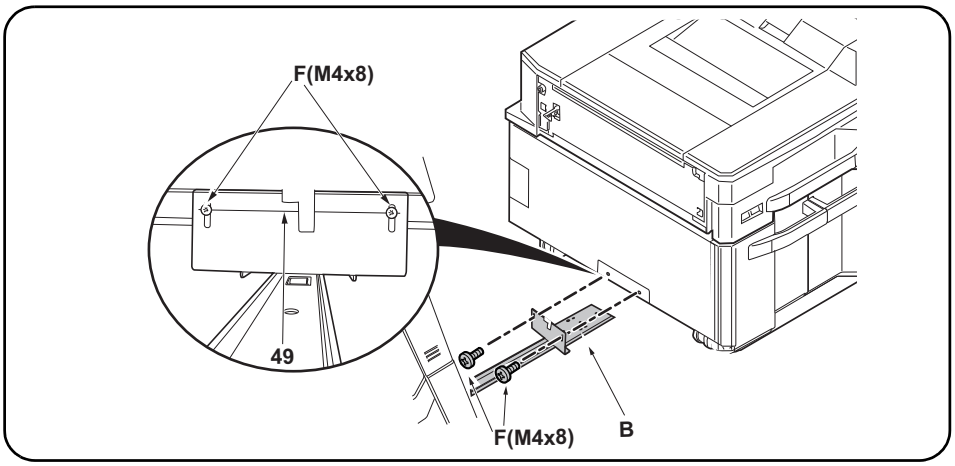

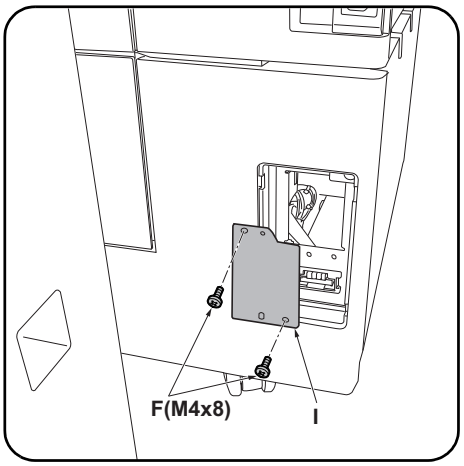

42. Attach the side feeder to the large base slider (B) using 2 M4 × 8 screws (F).Install so that the center of the M4 × 8 screws (F) comes over the horizontal line (49) of the mounting plate on the large base slider (B).

43. Install the cover plate (I) using 2 M4 × 8 screws (F).

---

42. Fixer le plateau d'alimentation latéral à la grande règle de base (B) à l'aide de 2 vis M4 × 8 (F). Procéder de sorte que l'axe des vis M4 × 8 (F) recouvre la ligne horizontale (49) du plateau de montage sur la grande règle de base (B).

43. Fixer le capot (I) à l'aide de 2 vis M4 × 8 (F).

---

42. Sujete el alimentador lateral al deslizador de base grande (B) con 2 tornillos M4 × 8 (F). Instale de manera que el centro de los tornillos M4 × 8 (F) queden sobre la línea horizontal (49) de la placa de montaje del deslizador de base (B) grande.

43. Instale la tapa (I) usando los 2 tornillos M4 × 8 (F).

---

42. Den seitlichen Einzug am großen Basis-Schieber (B) mithilfe der 2 Schrauben 2 M4 × 8 (F) befestigen. Befestigen Sie ihn so, dass die Mitte der M4 × 8 Schrauben (F) über der Waagrechtlinie (49) der Montageplatte am großen Basis-Schieber (B) liegt.

43. Bringen Sie die Abdeckungsplatte (I) mit 2 M4 × 8 Schrauben (F) an.

---

42. Collegare l'unità di alimentazione laterale allo scivolo di base grande (B) usando 2 viti M4 × 8 (F). Installare in modo che il centro delle viti M4 × 8 (F) sia sulla linea orizzontale (49) della piastra di montaggio sullo scivolo di base grande (B).

43. Installare il coperchio (I) utilizzando 2 viti M4 × 8 (F).

---

42. 使用 2 颗 M4×8 螺丝 (F) 将侧供纸盒安装到底座滑板（大）(B) 上。此时，应确保 M4×8 螺丝 (F) 的中心处于底座滑板（大）(B) 的安装板的平行线 (49) 上。

43. 使用 2 颗 M4×8 螺丝 (F) 安装盖板 (I)。

---

42. 나사 M4×8(F) 2 개로 베이스 슬라이더 대 (B) 에 사이드 피더를 장착합니다 . 그 때 , 베이스 슬라이더 대 (B) 의 설치판의 평행선 (49) 에 나사 M4×8(F) 의 센터가 오도록 장착합니다 .

43. 나사 M4×8(F) 2 개로 커버 플레이트 (I) 를 장착합니다 .

---

42. ビス M4×8(F)2 本でベーススライダー大 (B) にサイドフィーダーを取り付ける。その際、ベーススライダー大 (B) の取付板の平行線 (49) にビス M4×8(F) のセンターがくるように取り付ける。

43. ビス M4×8(F)2 本でカバープレート (I) を取り付ける。

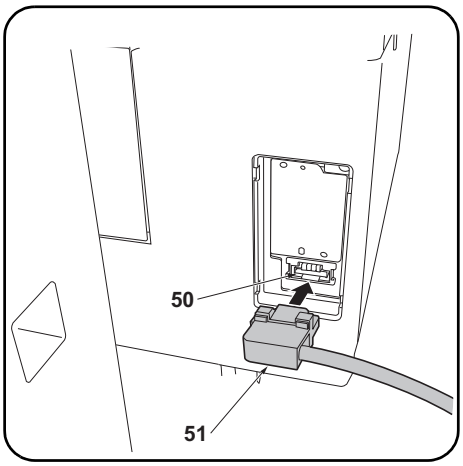

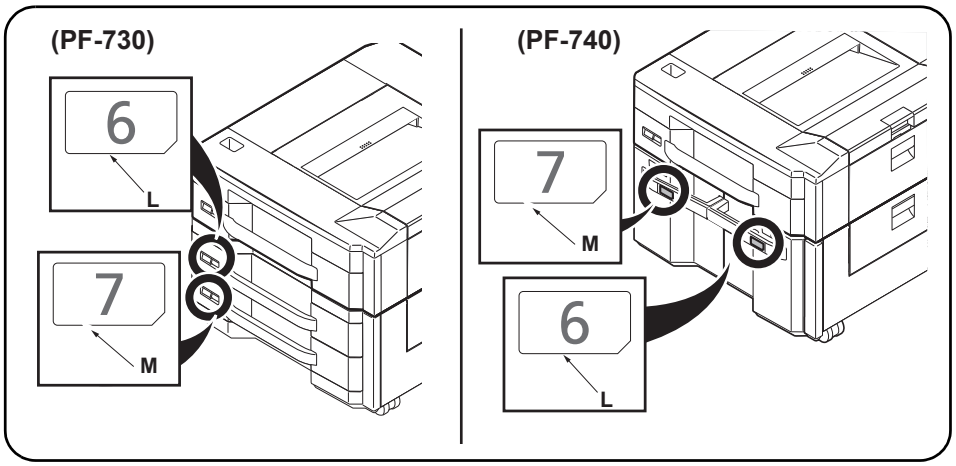

44. Connect the signal cable (51) of the side feeder to the connector (50) of the machine.
45. Push the side feeder to connect it to the machine.

46. After using alcohol to clean place adhering the cassette number label 6 (L) and the cassette number label 7 (M), adhere them in the positions indicated in the illustration.

---

44. Connecter le câble de signal (51) du chargeur latéral au connecteur (50) de la machine.
45. Pousser le chargeur latéral pour le raccorder à la machine.

46. Coller l'étiquette de numéro de cassette 6 (L) et l'étiquette de numéro de cassette 7 (M) sur les emplacements indiqués dans l'illustration, après avoir soigneusement nettoyé ces derniers à l'alcool.

---

44. .Conecte el cable de señal (51) del depósito lateral al conector (50) de la máquina.
45. Empuje el depósito lateral para conectarlo a la máquina.

46. Después de utilizar alcohol para limpiar la zona donde se va a pegar la etiqueta de casete con el número 6 (L) y la etiqueta de casete con el número 7 (M), péguelas en los lugares que se indican en la ilustración.

---

44. Das Signalkabel (51) des seitlichen Einzugs an den Stecker (50) des Geräts anschließen.
45. Drücken Sie auf den seitlichen Einzug, um ihn mit dem Geräts zu verbinden.

46. Zum Anbringen der Aufkleber Kassettennummer 6 (L) und Kassettennummer 7 (M) die Stellen zuvor mit Alkohol reinigen und die Aufkleber dann an den in der Abbildung angegebenen Positionen anbringen.

---

44. Collegare il cavo del segnale (51) dell'alimentatore laterale al connettore (50) della macchina.
45. Schieben Sie den seitlichen Einzug, um ihn mit dem Gerät zu verbinden.

46. Dopo aver utilizzato alcol per pulire la piastra che aderisce all'etichetta numero cassetta 6 (L) e l'etichetta numero cassetta 7 (M), farli aderire nelle posizioni indicate nell'illustrazione.

---

44. 将侧供纸盒的信号线（51）与机器主机的接插件（50）相连。
45. 按住侧供纸盒，将其与机器主机连接。

46. 使用酒精清洁要粘贴纸盒编号标签 6（L）、纸盒编号标签 7（M）的位置后，按图示位置粘贴。

---

44. 사이드 피더의 신호 케이블 (51) 을 본체 커넥터 (50) 에 연결합니다 .
45. 사이드 피더가 본체에 연결되도록 사이드 피더를 밀어 넣습니다 .

46. 카세트 넘버라벨 6 (L) , 카세트 넘버라벨 7 (M) 의 부착위치를 알코올 청소 후 , 일러스트의 위치에 부착합니다 .

---

44. サイドフィーダーの信号線（51）を機械本体のコネクター(50) に接続する。
45. サイドフィーダーを押し、機械本体に接続する。

46. カセットナンバーラベル 6(L)、カセットナンバーラベル 7(M)をアルコール清掃後、イラストの位置に貼り付ける。

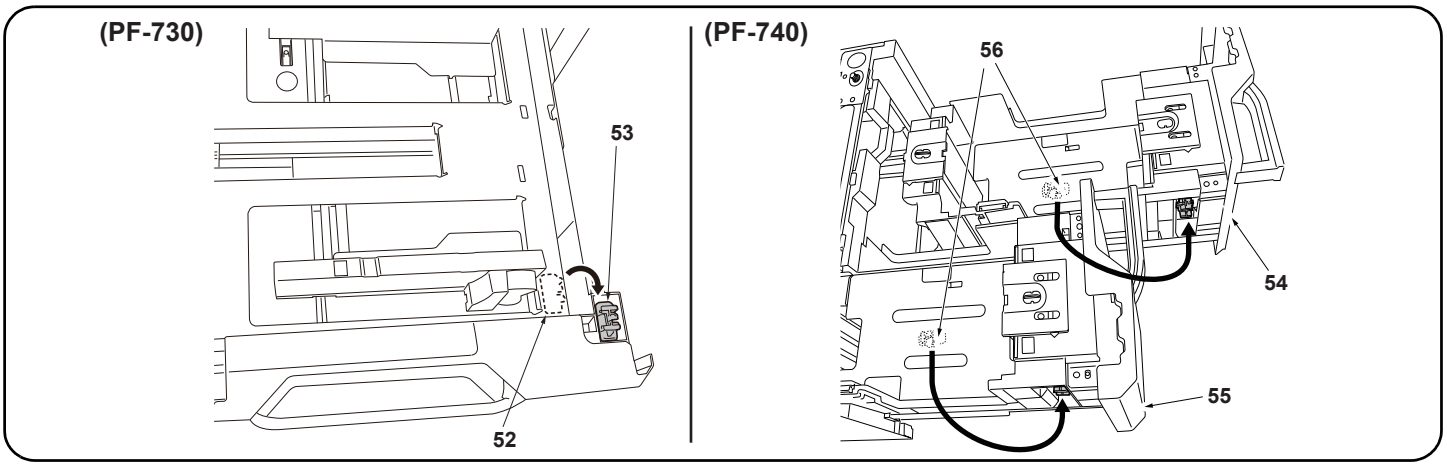

For PF-730

47. Pull each cassette out and then remove the lift plate stopper (52) from each cassette and attach it to the storage location (53).

For PF-740

47. Pull out the right cassette (54) and left cassette (55), remove each of the lift plate stoppers (56) and attach them in the storage location.

48. Gently close each cassette.

Pour PF-730

47. Tirer chaque tiroir vers l'extérieur puis retirer la butée de plaque d'élévation (52) de chaque tiroir et la fixer à l'emplacement de rangement (53).

Pour PF-740

47. Sortir le tiroir droit (54) et le tiroir gauche (55), déposer toutes les butées du plateau de levage (56) et les ranger soigneusement.

48. Refermer progressivement chaque tiroir.

Para PF-730

47. Abra la bandeja y quite el tope de la placa de elevación (52) de cada bandeja y colóquela en su lugar de depósito (53).

Para PF-740

47. Extraiga el cajón derecho (54) y el cajón izquierdo (55), quite cada uno de los topes de placa de elevación (56) y fíjelos en el lugar de almacenamiento.

48. Cierre suavemente cada bandeja.

Für PF-730

47. Die einzelnen Kassetten herausziehen, dann den Hebeplattenanschlag (52) von jeder Kassette entfernen und an der Speicherposition (53) anbringen.

Für PF-740

47. Die rechte Papierlade (54) und die linke Papierlade (55) herausziehen, jeden der Hebeplattenanschläge (56) entfernen und in der vorgesehenen Position verstauen.

48. Alle Kassetten sachte schließen.

Per PF-730

47. Estrarre ciascun cassetto e poi rimuovere il fermo della piastra di sollevamento (52) da ciascun cassetto e fissarlo nella posizione di immagazzinaggio (53).

Per PF-740

47. Estrarre il cassetto destro (54) e il cassetto sinistro (55), rimuovere ciascuno dei fermi (56) della piastra di sollevamento ed applicarli nella posizione di conservazione.

48. Chiudere delicatamente ciascun cassetto.

PF-730 时

47. 拉出各供纸盒，拆下各 1 个升降板挡块 (52)，并安装在保管场所 (53) 上。

PF-740 时

47. 拉出右侧供纸盒 (54) 以及左侧供纸盒 (55)，拆下各 1 个升降板挡块 (56)，并安装在保管场所上。

48. 轻轻地推入各供纸盒。

PF-730 의 경우

47. 각 카세트를 빼고 리프트판 스토퍼 (52) 각 1 개를 빼내 보관장소 (53) 에 부착합니다 .

PF-740 의 경우

47. 카세트 오른쪽 (54) 및 카세트 왼쪽 (55) 을 꺼내어 리프트판 스토퍼 (56) 각 1 개를 제거하고 보관장소에 부착합니다

48. 각 카세트를 조용히 밀어 넣습니다 .

PF-730 の場合

47. 各カセットを引き出し、リフト板ストッパー(52) 各 1 個を外して保管場所 (53) に取り付ける。

PF-740 の場合

47. カセット右 (54) およびカセット左 (55) を引き出し、リフト板ストッパー(56) 各 1 個を取り外し、保管場所に取り付ける。

48. 各カセットを静かに押し込む。

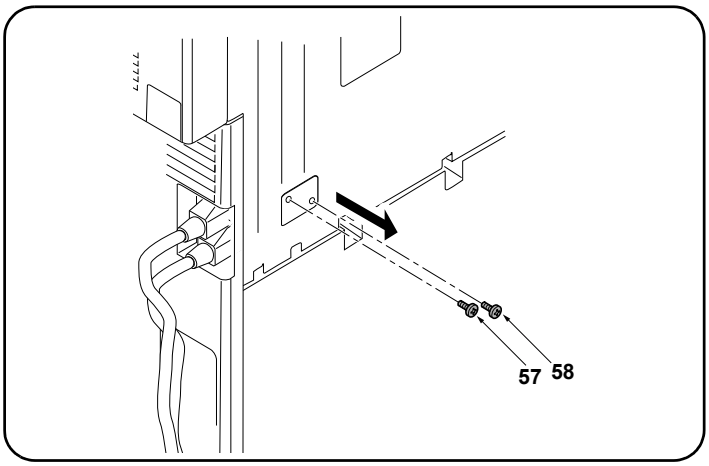

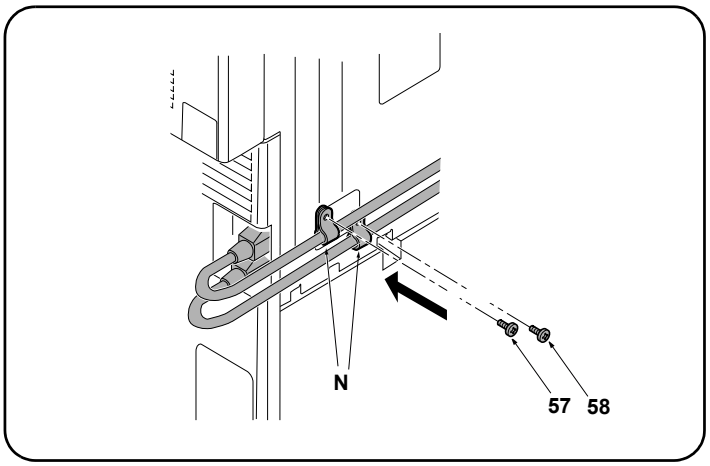

When there is 1 power cable
49. Remove a screw (58).
When there are 2 power cables
49. Remove 2 screws (57) and (58).

When there is 1 power cable
50. Pass the power cable through the clamp (N) and fasten it using a screw (58) removed in step 49.
When there are 2 power cables
50. Pass the power cable through clamp (N) and fasten it using 2 screws (57) (58) removed in step 49.

En cas d'utilisation de 1 seul cordon d'alimentation
49. Retirer la vis (58).
En cas d'utilisation de 2 cordons d'alimentation
49. Retirer les 2 vis (57) et (58).

En cas d'utilisation de 1 seul cordon d'alimentation
50. Faire passer le cordon d'alimentation au travers de collier (N) et le fixer à l'aide de la vis (58) déposée à l'étape 49.
En cas d'utilisation de 2 cordons d'alimentation
50. Faire passer les cordons d'alimentation au travers des colliers (N) et les fixer à l'aide des 2 vis (57) et (58) déposées à l'étape 49.

Si hay 1 cable eléctrico
49. Quite un tornillo (58).
Si hay 2 cables eléctricos
49. Quite 2 tornillos (57) y (58).

Si hay 1 cable eléctrico
50. Pase el cable eléctrico por el sujetador (N) y apriételo con el tornillo (58) que quitó en el paso 49.
Si hay 2 cables eléctricos
50. Pase el cable eléctrico por el sujetador (N) y apriételo con los 2 tornillos (57) y (58) que quitó en el paso 49.

Wenn 1 Netzkabel vorhanden ist
49. Die Schraube (58) entfernen.
Wenn 2 Netzkabel vorhanden sind
49. Die 2 Schrauben (57) und (58) entfernen.

Wenn 1 Netzkabel vorhanden ist
50. Das Netzkabel durch die Klemme (N) führen und es mit der in Schritt 49 entfernten Schraube (58) befestigen.
Wenn 2 Netzkabel vorhanden sind
50. Das Netzkabel durch die Klemme (N) führen und es mit den in Schritt 49 entfernten 2 Schrauben (57) (58) befestigen.

Quando esiste 1 cavo di alimentazione
49. Rimuovere una vite (58).
Quando esistono 2 cavi di alimentazione
49. Rimuovere 2 viti (57) e (58).

Quando esiste 1 cavo di alimentazione
50. Passare il cavo di alimentazione attraverso il morsetto (N) e stringerlo usando una vite (58) rimossa nel passo 49.
Quando esistono 2 cavi di alimentazione
50. Passare il cavo di alimentazione attraverso il morsetto (N) e stringerlo usando 2 viti (57) (58) rimosse nel passo 49.

---

1 根电源线时
49. 拆除 1 颗螺丝（58）。
2 根电源线时
49. 拆除 2 颗螺丝（57）（58）。

1 根电源线时
50. 将电源线穿过束线夹（N），使用在步骤 49 中拆除的 1 颗螺丝（58）固定电源线。
2 根电源线时
50. 将电源线穿过束线夹（N），使用在步骤 49 中拆除的 2 颗螺丝（57）(58) 固定电源线。

전선 코드가 1 개인 경우
49. 나사 (58) 1 개를 제거합니다 .
전선 코드가 2 개인 경우
49. 나사 (57) (58) 2 개를 제거합니다 .

전선 코드가 1 개인 경우
50. 전선 코드를 클램프 (N) 에 통과시키고 순서 49 에서 제거한 나사 (58) 1 개로 고정합니다 .
전선 코드가 2 개인 경우
50. 전선 코드를 클램프 (N) 에 통과시키고 순서 49 에서 제거한 나사 (57) (58) 2 개로 고정합니다 .

電源コードが 1 本の場合
49. ビス(58)1 本を外す。
電源コードが 2 本の場合
49. ビス(57)(58)2 本を外す。

電源コードが 1 本の場合
50. 電源コードをクランプ(N)に通し、手順 49 で外したビス(58)1 本で固定する。
電源コードが 2 本の場合
50. 電源コードをクランプ(N)に通し、手順 49 で外したビス(57)(58)2 本で固定する。

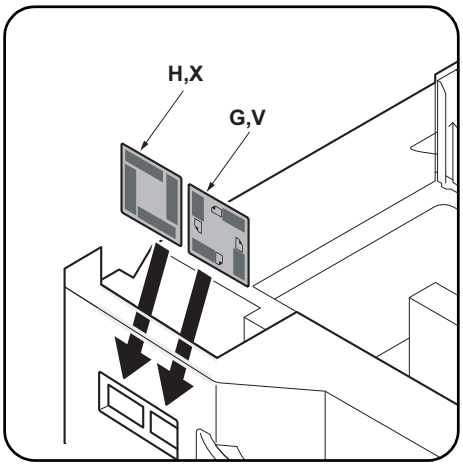

Setting the paper size plate and media type plate
Insert the paper size plate (G,V) and media type plate (H,X) into the each slots respectively.

Skewed paper feed adjustment (PF-730 only)
1. Connect the machine power plug to the wall outlet and turn the machine main power switch on.
2. Load paper into the cassette and make a test copy to check the image.
3. If the image is skewed (skewed paper feed), make the adjustments described below.
   <Reference value> Left-right difference of 1.5 mm or less

Disposition des plaquettes du format de papier et du type de support
Introduire la plaquette du format de papier (G,V) et la plaquette du type de support (H,X) dans leur logement respectif.

Réglage de l'entraînement du papier en biais (PF-730 uniquement)
1. Insérer la fiche d'alimentation de la machine dans la prise murale et mettre la machine sous tension.
2. Mettre du papier dans le tiroir et effectuer une copie d'essai pour vérifier l'image.
3. Si l'image est en biais (entraînement du papier en biais), régler en procédant comme décrit ci-dessous.
   <Valeur de référence> Différence de droite à gauche de 1,5 mm ou moins.
4. Sortir le tiroir (1) du bureau papier et desserrer les 4 vis (2).

Ajuste de la placa de tamaño de papel y la placa de tipo de medio
Inserte la placa de tamaño de papel (G,V) y la placa de tipo de medio (H,X) en cada uno de las ranuras, respectivamente.

Ajuste de alimentación de papel torcida (PF-730 solamente)
1. Conecte el enchufe de la máquina en el receptáculo de pared y encienda el interruptor principal de la máquina.
2. Introduzca papel en el cajón y haga una copia de prueba para verificar la imagen.
3. Si la imagen está torcida (alimentación del papel torcida) haga los ajustes que se describen a continuación.

Einsetzen der Papierformatkarte und der Medientypkarte
Setzen Sie die Papierformatkarte (G,V) und die Medientypkarte (H,X) in die jeweiligen Führungen.

Einstellung bei verkantetem Papiereinzug (nur PF-730)
1. Stecken Sie den Netzstecker des Geräts in die Wandsteckdose und schalten Sie das Gerät am Hauptschalter ein.
2. Legen Sie Papier in die Papierlade ein und machen Sie eine Testkopie, um das Bild zu prüfen.
3. Nehmen Sie nachstehende Einstellungen vor, falls das Bild verkantet ist (verkanteter Papiereinzug).
   <Bezugswert> Links-rechts-Differenz maximal 1,5 mm.

Impostazione della piastra di formato carta e della piastra del tipo di supporto
Inserire la piastra del formato carta (G,V) e la piastra del tipo di supporto (H,X) nei rispettivi alloggiamenti.

Regolazione alimentazione obliqua carta (solo PF-730)
1. Collegare la spina della macchina alla presa di corrente a muro e accendere l'interruttore di alimentazione della macchina.
2. Caricare carta nel cassetto ed eseguire una copia di prova per controllare l'immagine.
3. Se l'immagine risulta obliqua (alimentazione obliqua della carta), eseguire le regolazioni descritte sotto.
   <Valore di riferimento> Differenza tra destra e sinistra di 1,5 mm o inferiore

---

纸张尺寸标示和纸张种类标示的安装
将纸张尺寸标示 (G,V) 和纸张种类标示 (H,X) 分别插入到图示的插槽中。

歪斜进纸调节（仅限 PF-730）
1. 将机器主机上的电源插头插入电源插座中，打开主电源开关。
2. 在纸盒中放入纸张。进行测试复印以确认图像。
3. 图像倾斜（歪斜进纸）时进行以下调节。
   ＜基准值＞左右差 1.5㎜ 以下

용지크기 플레이트와 용지종류 플레이트의 세트
용지크기 플레이트 (G,V) 와 용지종류 플레이트 (H,X) 를 각표시 슬롯에 각각 삽입한다 .

경사급지 조정 (PF-730 만)
1. 본체 전원 플러그를 벽 콘센트에 연결하고 본체의 주 전원 스위치를 켭니다 .
2. 카세트에 용지를 장착합니다 . 시험복사를 하고 화상을 확인합니다 .
3. 화상이 기울어져 있는 (경사급지) 경우에는 다음 조정을 합니다 .
   ＜기준치＞ 좌우차 1.5mm 이하

用紙サイズプレートと用紙種類プレートのセット
用紙サイズプレート (G,V) と用紙種類プレート (H,X) を各表示スロットにそれぞれ挿入する。

斜め給紙調整 (PF-730 のみ)
1. 機械本体の電源プラグをコンセントに差し込み、主電源スイッチを ON にする。
2. カセットに用紙をセットする。テストコピーをおこない、画像を確認する。
3. 画像が傾いている(斜め給紙)場合は次の調整をおこなう。
   ＜基準値＞左右差 1.5㎜ 以下

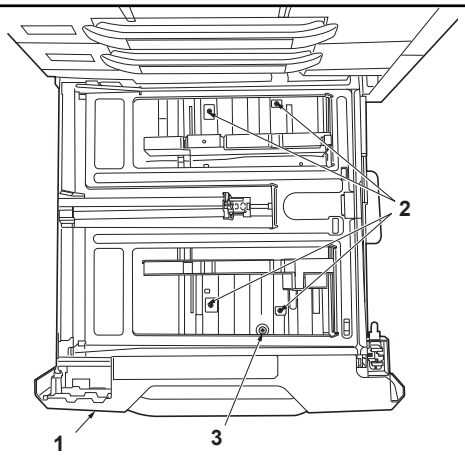

4. Pull out the cassette (1) in the paper feeder and loosen the 4 screws (2).
5. Turn the adjusting screw (3) to adjust the cursor skew.
6. Retighten the 4 screws (2).
7. Make another test copy to check the image.

---

5. Faire tourner la vis de réglage (3) pour régler la déviation du curseur.
6. Resserrer les 4 vis (2).
7. Faire une autre copie d'essai pour vérifier l'image.

<Valor de referencia> diferencia izquierda-derecha de 1,5 mm o menor.

4. Extraiga el cajón (1) del alimentador de papel y afloje los 4 tornillos (2).
5. Gire el tornillo de ajuste (3) para ajustar la desviación del cursor.
6. Vuelva a apretar los 4 tornillos (2).
7. Haga otra copia de prueba para verificar la imagen.

---

4. Ziehen Sie die Papierlade (1) aus dem Papiereinzug und lösen Sie die 4 Schrauben (2).
5. Drehen Sie die Einstellschraube (3), um die Cursor-Verkantung zu korrigieren.
6. Ziehen Sie die 4 Schrauben (2) wieder an
7. Erstellen Sie zur Überprüfung des Bilds noch einmal eine Testkopie.

---

4. Estrarre il cassetto (1) dell'unità di alimentazione della carta e quindi allentare le 4 viti (2).
5. Ruotare la vite di regolazione (3) per regolare l'inclinazione del cursore.
6. Ristringere le 4 viti (2).
7. Eseguire un'altra copia di prova per controllare l'immagine.

---

4. 拉出供纸盒（1），拧松 4 颗螺丝（2）。
5. 旋转调节螺丝（3），以调节游标的倾斜。
6. 拧紧 4 颗螺丝（2）。
7. 再次进行测试复印，确认图像。

---

4. 급지 카세트 (1) 를 빼 내어 나사 (2) 4 개를 느슨하게 합니다 .
5. 조정나사 (3) 을 돌려 커서 경사조정을 합니다 .
6. 나사 (2) 4 개를 조입니다 .
7. 다시 시험복사를 하고 화상을 확인합니다 .

---

4. ペーパーフィーダーのカセット (1) を引出し、ビス (2)4 本を緩める。
5. 調整ネジ (3) を回し、カーソルの傾き調整をおこなう。
6. ビス (2)4 本を締め付ける。
7. 再度、テストコピーをおこない、画像を確認する。

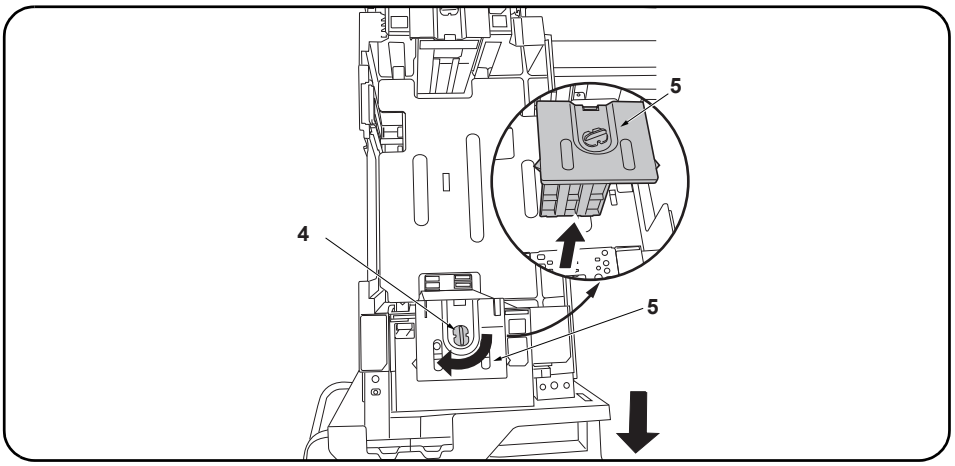

Changing paper size (PF-740, metric specifications only)
At shipment, Letter is set for inch models and A4 is set for metric models. Use the procedure below to change the size to B5.

1. Pull out the cassette of the paper feeder.
2. Turn the front lock lever (4) 90° and remove the front deck cursor (5).

Modification du format du papier (PF-740, pour spécifications métriques seulement)
À expédition, les modèles à mesure en pouces sont réglés sur le format Letter et les modèles à mesure métrique sur le format A4. Pour passer au format B5, procéder de la manière suivante.

1. Tirer le magasin du bureau papier vers soi.
2. Faire tourner le levier de verrouillage avant (4) de 90º et déposer le curseur de platine avant (5).

Cómo cambiar el tamaño de papel (PF-740, sólo para las especificaciones métricas)
En el momento de salida de fábrica, se configura Carta para los modelos en pulgadas y A4 para los modelos en sistema métrico. Siga este procedimiento para cambiar el tamaño a B5.

1. Abra el casete del alimentador de papel.
2. Gire la palanca de bloqueo frontal (4) 90º y quite el cursor frontal de la plataforma (5).

Ändern des Papierformats (PF-740, nur metrische Spezifikationen)
Beim Werksversand ist bei Modellen mit Zollmaß das Format Letter voreingestellt und bei Modellen mit metrischem Maß das Format A4.
Das Format kann wie folgend auf B5 umgeschaltet werden.

1. Ziehen Sie die Papierlade aus dem Papiereinzug.
2. Den vorderen Verriegelungshebel (4) um 90° drehen und den vorderen Konsole-Cursor (5) abnehmen.

Cambio del formato della carta (PF-740, solo per le specifiche metriche)
Al momento della spedizione, Letter è impostato per le specifiche in pollici e A4 è impostato per le specifiche metriche. Usare la procedura riportata sotto per cambiare il formato a B5.

1. Estrarre il cassetto dell'unità di alimentatore della carta.
2. Ruotare la leva frontale di blocco (4) di 90° e rimuovere il cursore frontale del deck (5).

纸张尺寸更改（PF-740，仅限公制规格）
产品出厂时，英制规格设定为 Letter、公制规格设定为 A4。要将尺寸更改为 B5 时，请按以下步骤进行操作。

1. 拉出供纸工作台的供纸盒。
2. 将前部锁定杆 (4) 旋转 90°，拆下堆纸板前部游标（5）。

용지크기 변경 (PF-740, 센치 사양만)
출하시 , 인치사양은 Letter, 센치사양은 A4 로 설정되어 있습니다 . 크기를 B5 로 변경하는 경우에는 다음 순서를 진행해 주십시오 .

1. 급지대 카세트를 빼 냅니다 .
2. 잠금레버 앞 (4) 을 90° 회전시켜 데크커서 앞 (5) 을 제거합니다 .

用紙サイズ変更(PF-740，センチ仕様のみ)
出荷時、インチ仕様は Letter、センチ仕様は A4 に設定されています。サイズを B5 に変更する場合は次の手順をおこなってください。

1. ペーパーフィーダーのカセットを引き出す。
2. ロックレバー前 (4) を 90° 回転させ、デッキカーソル前(5)を取り外す。

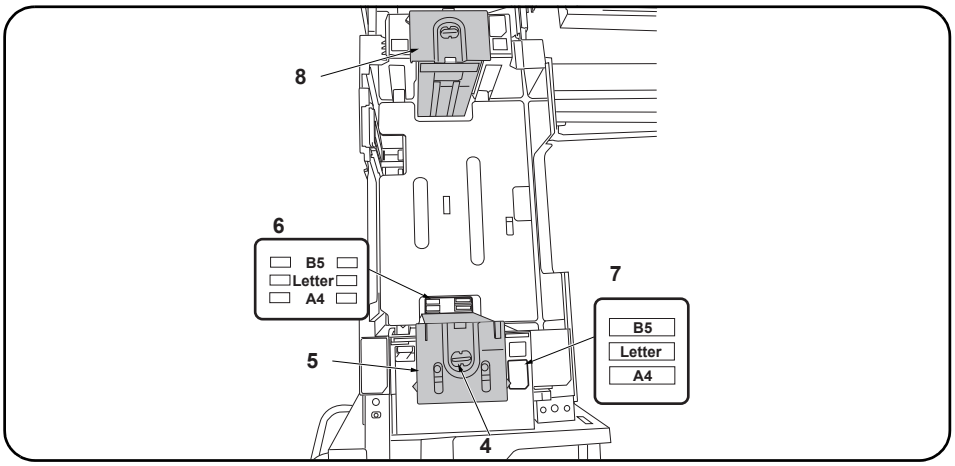

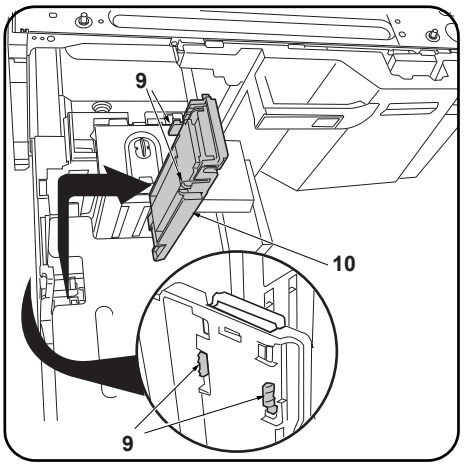

3. Move the front deck cursor (5) so that it is aligned with the size indicators on the top (7) and bottom (6) of the cassette.
4. Turn the front lock lever (4) 90° to lock it.
5. Move the rear deck cursor (8) in the same way.

6. Release the hook (9) and remove the deck trailing edge cursor (10).

---

3. Déplacer le curseur de platine avant (5) de sorte qu'il soit aligné avec les indicateurs de format en haut (7) et en bas (6) du tiroir.
4. Faire tourner le levier de verrouillage avant (4) de 90º pour le verrouiller.
5. Déplacer le curseur de platine arrière (8) en procédant de la même manière.

6. Libérer le crochet (9) et déposer le curseur du bord arrière de la platine (10).

---

3. Mueva el cursor frontal de la plataforma (5) para que quede alineado con las indicadores de tamaño de la parte superior (7) e inferior (6) del cajón.
4. Gire la palanca de bloqueo frontal (4) 90º para bloquearla.
5. Mueva el cursor trasero de la plataforma (8) de la misma forma.

6. Libere el gancho (9) y quite el cursor del borde inferior de la plataforma (10).

---

3. Den vorderen Konsole-Cursor (5) so verschieben, dass er mit den Formatanzeigen oben (7) und unten (6) an der Kassette fluchtet.
4. Den vorderen Verriegelungshebel (4) zum Verriegeln um 90° drehen.
5. Den hinteren Konsole-Cursor (8) auf gleiche Weise verschieben.

6. Den Haken (9) lösen und den Hinterkante-Cursor (10) der Konsole abnehmen.

---

3. Spostare il cursore frontale del deck (5) in modo che esso risulti allineato con gli indicatori di formato sulla parte superiore (7) e inferiore (6) del cassetto.
4. Ruotare la leva frontale di blocco (4) di 90°, per bloccarla.
5. Spostare il cursore posteriore del deck (8) allo stesso modo.

6. Rilasciare il gancio (9) e rimuovere il cursore del bordo di uscita del deck (10).

---

3. 移动堆纸板前部游标 (5)，使供纸盒下部的尺寸标记 (6) 与供纸盒上部的尺寸标记 (7) 对齐。
4. 将前部锁定杆 (4) 旋转 90° 以固定。
5. 按同样方式移动后部堆纸板后部游标 (8)。

6. 解除卡扣 (9)，拆下堆纸板后部游标 (10)。

---

3. 카세트 밑의 크기표시 (6) 와 카세트 위의 크기 표시 (7) 에 맞춰 데크커서 앞 (5) 을 이동시킵니다 .
4. 잠금레버 앞 (4) 을 90° 회전시켜 고정합니다 .
5. 똑같이 데크커서 뒤 (8) 를 이동시킵니다 .

6. 후크 (9) 를 해제하고 데크 뒷단커서 (10) 를 제거합니다 .

---

3. カセット下のサイズ表示 (6) とカセット上のサイズ表示 (7) に合わせてデッキカーソル前 (5) を移動させる。
4. ロックレバー前 (4) を 90° 回転させ固定する。
5. 同様にデッキカーソル後 (8) を移動させる。

6. フック (9) を解除し、デッキ後端カーソル (10) を取り外す。

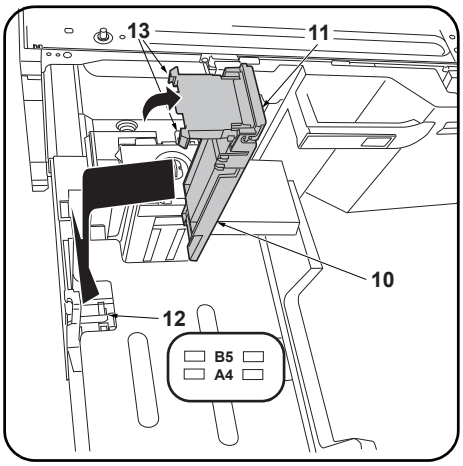

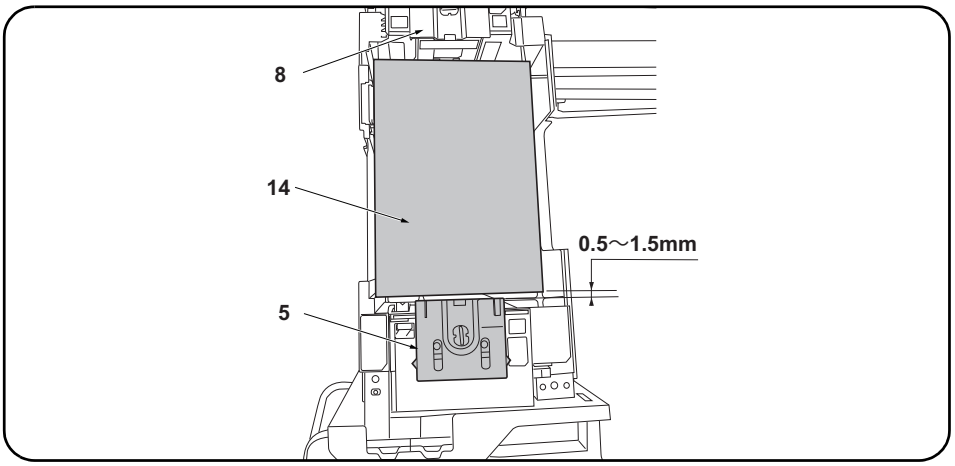

7. Lift up the sub-cursor (11).
8. Align with the size indicator (12), engage the hook (13) and install the deck trailing edge cursor (10).

Adjusting the cursor width (PF-740 only)

1. Load paper in the cassettes.
2. If the gap between the front deck cursor (5) and the paper (14) is outside the 0.5 to 1.5 mm range when the paper (14) is touching up against the rear deck cursor (8), perform the following adjustment.
* A cursor width that is too small can hinder paper feeding, while a cursor width that is too large can lead to problems such as skewed paper feed.

---

7. Lever le curseur secondaire (11).
8. Aligner avec l'indicateur de format (12), engager le crochet (13) et reposer le curseur du bord arrière de la platine (10).

Réglage de la largeur du curseur (PF-740 uniquement)

1. Charger les tiroirs en papier.
2. Si l'écartement entre le curseur de platine avant (5) et le papier (14) est hors des limites de 0,5 à 1,5 mm quand le papier (14) touche le curseur de platine arrière (8), procéder au réglage suivant.
* Une largeur trop faible du curseur risque d'empêcher l'entraînement du papier et une largeur trop grande risque d'entraîner des problèmes du type entraînement du papier de biais.

---

7. Levante el cursor secundario (11).
8. Alinee con el indicador de tamaño (12), enganche el gancho (13) e instale el cursor del borde inferior de la plataforma. (10).

Cómo ajustar la anchura del cursor (PF-740 solamente)

1. Cargue papel en los cajones.
2. Si la separación entre el cursor frontal de la plataforma (5) y el papel (14) está fuera del rango de 0,5 a 1,5 mm cuando el papel (14) toca el cursor trasero de la plataforma (8), haga el siguiente ajuste.
* Una anchura del cursor demasiado pequeña puede impedir la alimentación de papel; una anchura del cursor demasiado grande puede provocar problemas con la alimentación torcida de papel.

---

7. Den Unter-Cursor (11) anheben.
8. Auf die Formatanzeige (12) ausrichten, den Haken (13) einsetzen und den Hinterkante-Cursor (10) der Konsole anbringen.

Einstellen der Cursor-Breite (nur PF-740)

1. Papier in die Papierladen einlegen.
2. Falls der Abstand zwischen dem vorderen Konsole-Cursor (5) und dem Papier (14) außerhalb des Bereichs 0,5 bis 1,5 mm liegt, wenn das Papier (14) am hinteren Konsole-Cursor (8) anliegt, ist folgende Einstellung vorzunehmen.
* Eine zu kleine Cursor-Breite kann den Papiereinzug behindern, wogegen eine zu große Cursor-Breite verkanteten Papiereinzug und ähnliche Probleme verursachen kann.

---

7. Sollevare il cursore secondario (11).
8. Allineare con l'indicatore formato (12), fissare il gancio (13) e installare il cursore del bordo di uscita del deck (10).

Regolazione della larghezza del cursore (solo PF-740)

1. Caricare carta nei cassetti.
2. Se lo spazio tra il cursore frontale del deck (5) e la carta (14) è fuori della gamma da 0,5 a 1,5 mm quando la carta (14) tocca il cursore postertiore del deck (8), eseguire la regolazione seguente.
* Una larghezza dei cursori troppo piccola può ostacolare l'alimentazione della carta, mentre unalarghezza dei cursori troppo grande può essere causa di problemi, come ad esempio l'alimentazione obbliqua della carta.

---

7. 抬起副游标 (11)。
8. 对齐尺寸标记 (12)，将卡扣 (13) 嵌入以安装堆纸板后部游标 (10)。

游标宽度的调节 （仅限 PF-740）

1. 在供纸盒中装入纸张。
2. 在堆纸板后部游标 (8) 与纸张 (14) 接触的状态下，如果堆纸板前部游标 (5) 与纸张 (14) 的间隙超出了 0.5 ～ 1.5㎜ 的范围，须进行以下调节。
※ 如果游标宽度过小，可能造成不供纸，游标宽度过大，则可能发生歪斜进纸等情况。

---

7. 서브커서 (11) 를 세웁니다 .
8. 크기표시 (12) 에 맞춰 후크 (13) 를 판벽데크 후단커서 (10) 를 부착합니다 .

커서 폭 조정 (PF-740 만)

1. 카세트에 용지를 장착합니다 .
2. 데크커서 뒤 (8) 에 용지 (14) 가 접하고 있는 상태에서 데크커서 앞 (5) 과 용지 (14) 의 틈이 0.5 ~ 1.5mm 의 범위외의 경우에는 이하의 조정을 합니다 .
※ 커서 폭이 작으면 무급지 , 커서 폭이 크면 경사급지 등이 발생할 가능성이 있습니다 .

---

7. サブカーソル (11) を起こす。
8. サイズ表示 (12) に合わせて、フック (13) をはめデッキ後端カーソル (10) を取り付ける。

カーソル幅の調整 (PF-740 のみ)

1. カセットに用紙をセットする。
2. デッキカーソル後 (8) に用紙 (14) が接している状態で、デッキカーソル前 (5) と用紙 (14) の隙間が 0.5 ～ 1.5㎜ の範囲外の場合は、以下の調整をおこなう。
※ カーソル幅が小さいと無給紙、カーソル幅が大きいと斜め給紙などが発生する可能性がある。

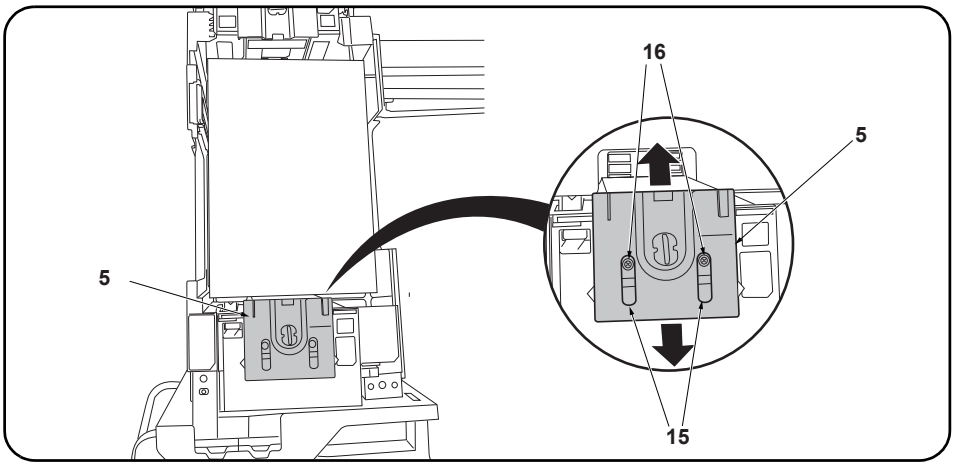

3. Insert a Philips-head screwdriver into the 2 long slots (15) in the front deck cursor (5) and loosen the 2 adjusting screws (16). Then move the front deck cursor (5).

4. Retighten the 2 adjusting screws (16).
5. Check that the gap between the front deck cursor (5) and the paper is between 0.5 and 1.5 mm.

---

3. Insérer un tournevis cruciforme dans les 2 longues fentes (15) du curseur de platine avant (5) et desserrer les 2 vis de réglage (16). Déplacer ensuite le curseur de platine avant (5).

4. Resserrer les 2 vis de réglage (16).
5. Vérifier que l'écartement entre le curseur de platine avant (5) et le papier est entre 0,5 et 1,5 mm.

---

3. Inserte un destornillador de cabeza Philips en las dos ranuras largas (15) en el cursor frontal de la plataforma (5) y afloje los 2 tornillos de ajuste (16). Después, mueva el cursor frontal de la plataforma (5).

4. Vuelva a apretar los 2 tornillos de ajuste (16).
5. Verifique que la separación entre el cursor frontal de la plataforma (5) y el papel sea de entre 0,5 y 1,5 mm.

---

3. Einen Kreuzschlitzschraubendreher in die 2 langen Öffnungen (15) im vorderen Konsole-Cursor (5) stecken und die 2 Einstellschrauben (16) lösen. Danach den vorderen Konsole-Cursor (5) verschieben.

4. Die 2 Einstellschrauben (16) wieder anziehen.
5. Vergewissern Sie sich, dass der Abstand zwischen dem vorderen Konsole-Cursor (5) und dem Papier im Bereich 0,5 bis 1,5 mm liegt.

---

3. Inserire un cacciavite con testa a croce tipo Philips nelle 2 fessure lunghe (15) nel cursore frontale del deck (5) e allentare le 2 viti di regolazione (16). Quindi spostare il cursore frontale del deck (5).

4. Ristringere le 2 viti di regolazione (16).
5. Controllare che lo spazio tra il cursore frontale del deck (5) e la carta sia compreso nella gamma tra 0,5 e 1,5 mm.

---

3. 将十字螺丝刀从堆纸板前部游标 (5) 的 2 处长孔 (15) 处插入，拧松 2 颗调节螺丝 (16)，移动堆纸板前部游标 (5)。

4. 拧紧 2 颗调节螺丝 (16)。
5. 确认堆纸板前部游标 (5) 与纸张的间隙在 0.5 ～ 1.5㎜ 的范围内。

---

3. 데크커서 앞 (5) 2 곳의 긴 구멍 (15) 에서 플러스 드라이버를 넣어 조정나사 (16) 2 개를 느슨하게 하고 데크커서 앞 (5) 을 이동시킵니다 .

4. 조정나사 (16) 2 개를 조입니다 .
5. 데크커서 앞 (5) 과 용지의 틈이 0.5 ~ 1.5 mm 범위내가 되어 있는 것을 확인합니다 .

---

3. デッキカーソル前 (5) の 2 箇所の長穴 (15) からプラスドライバー挿入し、調整ビス (16)2 本を緩め、デッキカーソル前 (5) を移動させる。

4. 調整ビス (16)2 本を締め付ける。
5. デッキカーソル前 (5) と用紙の隙間が 0.5 ～ 1.5㎜ の範囲内になっていることを確認する。

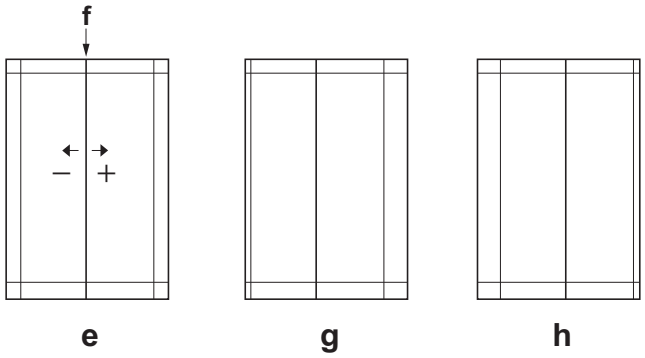

Adjusting the center line
The reference value for the center line is ±0.5 mm or less at position (f) in the correct image (e). If the center line position is outside this range, perform the following adjustment.

1. Set maintenance mode U034, select LSU Out Left and Cassette 5, Cassette 6 or Cassette 7.
2. Adjust the values.
   Test pattern (g): Increase the setting value. Test pattern (h): Decrease the setting value.
3. Press the Start key to confirm the setting value.

Réglage de l'axe
La valeur de référence pour l'axe est de ±0,5 mm ou moins à la position (f) d'une image correcte (e). Si la position de l'axe est hors de cette plage, effectuez le réglage suivant.

1. Passer au mode maintenance U034, sélectionner LSU Out Left et Cassette 5, Cassette 6 ou Cassette 7.
2. Régler les valeurs.
   Mire d' essai (g): Augmentez la valeur de réglage. Mire d' essai (h): Diminuez la valeur de réglage.
3. Appuyer sur la touche de Start pour confirmer la valeur de réglage.

Ajuste de la línea central
El valor de referencia de la línea central es de ±0,5 mm o menor, en la posición (f) de la imagen correcta (e). Si la posición de la línea central estuviera fuera de este rango, haga el siguiente ajuste.

1. Entre al modo mantenimiento U034, seleccione LSU Out Left y Cassette 5, Cassette 6 o Cassette 7.
2. Ajuste los valores.
   Patrón de prueba (g): Aumente el valor de configuración. Patrón de prueba (h): Reduzca el valor de configuración.
3. Pulse la tecla de Start para confirmar el valor de configuración.

Einstellen der Mittenlinie
Der Bezugswert für die Mittenlinie ist ±0,5 mm oder weniger an Position (f) des korrekten Bilds (e). Falls die Mittenlinie außerhalb dieses Bereichs liegt, ist folgende Einstellung vorzunehmen.

1. In den Wartungsmodus U034 schalten und LSU Out Left und Cassette 5, Cassette 6 oder Cassette 7 wählen.
2. Die Werte einstellen.
   Testmuster (g): Den Einstellwert erhöhen. Testmuster (h): Den Einstellwert verringern.
3. Den Einstellwert durch Drücken der Start-Taste bestätigen.

Regolazione della linea centrale
Il valore di riferimento per la linea centrale è ±0,5 mm o inferiore alla posizione (f) nell'immagine corretta (e). Se la posizione della linea centrale è all'infuori di questa gamma, effettuare la regolazione seguente.

1. Impostare la modalità di manutenzione U034, selezionare LSU Out Left e Cassette 5, Cassette 6 o Cassette 7.
2. Regolare i valori.
   Modello di prova (g): Aumentare il valore dell'impostazione. Modello di prova (h): Diminuire il valore dell'impostazione.
3. Premere il tasto di Start per confermare il valore dell'impostazione.

中心线调节
中心线的基准值在矫正图像 (e) 的 (f) 位置为 ±0.5mm 以内。超出该范围时，须进行以下调节。

1. 设置维护模式 U034，选择 LSU Out Left、Cassette5、Cassette6 或 Cassette7。
2. 调整设定值。
   测试图案 (g)：调高设定值。 测试图案 (h)：调低设定值。
3. 按 Start 键，以确定设定值。

센터라인 조정
센터라인은 적정화상 (e) 의 (f) 위치에서 기준치는 ±0.5mm 이내 . 여기에서 벗어나는 것은 이하의 조정을 합니다 .

1. 메인터넌스 모드 U034 을 세트하고 LSU Out Left, Cassette5, Cassette6 또는 Cassette7 을 선택합니다 .
2. 설정치를 조정합니다 .
   테트스 패턴 (g) :설정치를 높입니다 . 테스트 패턴 (h) :설정치를 내립니다 .
3. 시작키를 누르고 설정치를 확인합니다 .

センターライン調整
センターラインは、適正画像 (e) の (f) の位置で基準値は ±0.5mm 以内。これから外れるときは以下の調整をおこなう。

1. メンテナンスモード U034 をセットし、LSU Out Left、Cassette5、Cassette6 または Cassette7 を選択する。
2. 設定値を調整する。
   テストパターン (g) :設定値を上げる。 テストパターン (h) :設定値を下げる。
3. スタートキーを押し、設定値を確定する。

MEMO

MEMO

MEMO

303NL5671202

2012. 9
303NL56712-02

INSTALLATION GUIDE FOR 1000-SHEETS FINISHER

INSTALLATION GUIDE

GUIDE D’INSTALLATION

GUÍA DE INSTALACION

INSTALLATIONSANLEITUNG

GUIDA ALL’INSTALLAZIONE

安装手册

설치안내서

設置手順書

DF-770(D)

for Color MFP 30/30ppm,35/35ppm,
45/45ppm,55/50ppm
for Black & White MFP
35ppm,45ppm,55ppm

for Color Printer 45/45ppm,55/50ppm

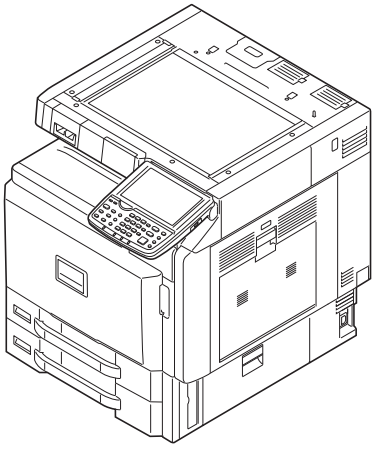

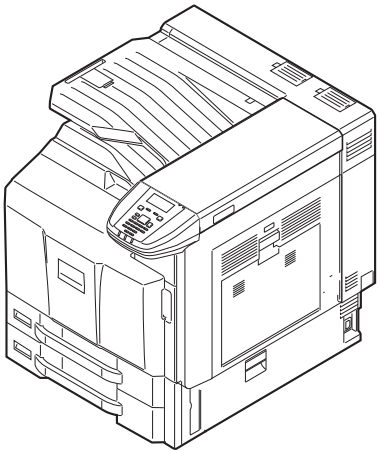

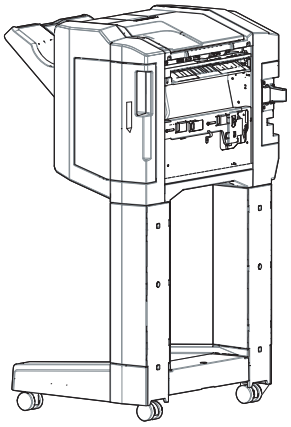

English

A different procedure is required depending on the product which is installed with this unit.Each procedure is described in the following pages.
For installation with a MFP, see Page 1 to Page 6.
For installation with a Printer, see Page 7 to Page 13.

Français

Une procédure différente est requise selon le produit qui est installé avec cette unité.Chaque procédure est décrite dans les pages suivantes.
Pour l'installation avec une imprimante multifonction, voir Page 1 à Page 6.
Pour l'installation avec une imprimante, voir Page 7 à Page 13.

Español

El procedimiento es diferente según el producto que se instale con esta unidad.En las siguientes páginas, se describe cada procedimiento.
Para la instalación con un MFP, consulte las páginas de la 1 a la 6.
Para la instalación con una impresora, consulte las páginas de la 7 a la 13.

Deutsch

Je nach verwendetem Modell ist eine andere Vorgehensweise zur Installation dieses Teils erforderlich.Die unterschiedlichen Vorgehensweisen werden auf den folgenden Seiten erläutert.
Bei Installation an einem MFP siehe Seiten 1 bis 6.
Bei Installation an einem Drucker siehe Seiten 7 bis 13.

Italiano

Si richiede una procedura diversa in funzione del prodotto su cui è installata l'unità.Le singole procedure sono descritte nelle pagine seguenti.
Per l'installazione con un MFP, vedere le pagine da 1 a 6.
Per l'installazione con una stampante, vedere le pagine da 7 a 13.

简体中文

根据安装对象，安装步骤略有不同。各个步骤记载在下面的页面。
安装到 MFP 上时，请参见 P1-P6。
安装到打印机上时，请参见 P7-P13。

한국어

이 장치에 설치되는 제품에 따라 절차가 다릅니다 . 다음 페이지에서 각 절차를 설명합니다 .
MFP 에 설치하는 경우 1 페이지 ~6 페이지를 참조하십시오 .
프린터에 설치하는 경우 7 페이지 ~13 페이지를 참조하십시오 .

日本語

装着する対象によって、取付手順は異なります。それぞれ、以下のページに記載しています。
MFP に設置する場合;1 ページ～ 6 ページ
プリンターに設置する場合;7 ページ～ 13 ページ

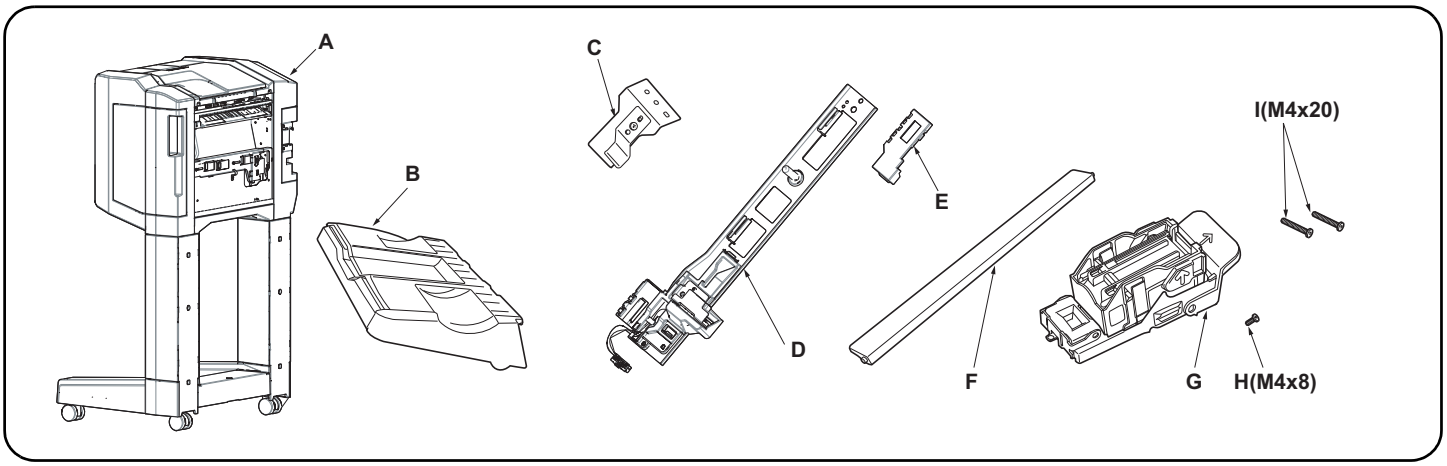

Supplied parts
A. Document finisher 1
B. Eject tray 1
C. Lower earth plate 1
D. Connecting plate 1
E. Connector cover 1
F. Eject guide 1
G. Staple cartridge 1
H. M4 × 8 screw 1
I. M4 × 20 screw 2

Be sure to remove any tape and/or cushioning materials from the parts supplied.

Pièces fournies
A. Finisseur de document 1
B. Bac d'éjection 1
C. Plaque de terre inférieure 1
D. Plaque de connexion 1
E. Cache de connecteur 1
F. Guide d'éjection 1
G. Cartouche d'agrafes 1
H. Vis M4 × 8 1
I. Vis M4 × 20 2

Veillez à retirer les morceaux de bande adhésive et/ou les matériaux de rembourrage des pièces fournies.

Partes suministradas
A. Finalizador de documentos 1
B. Bandeja de salida 1
C. Placa de conexión a tierra inferior 1
D. Placa de conexión 1
E. Cubierta del conector 1
F. Guía de salida 1
G. Cartucho de grapas 1
H. Tornillo M4 × 8 1
I. Tornillo M4 × 20 2

Asegúrese de despegar todas las cintas y/o material amortiguador de las partes suministradas.

Enthaltene Teile
A. Finisher 1
B. Auswerffach 1
C. Untere Grundplatte 1
D. Verbindungsplatte 1
E. Stecker-Abdeckung 1
F. Ausgabeführung 1
G. Heftklammer-Magazin 1
H. M4 × 8 Schraube 1
I. M4 × 20 Schraube 2

Stellen Sie sicher, dass sämtliche Klebebänder und/oder Polstermaterial von den gelieferten Teilen entfernt wurden.

Parti fornite
A. Finisher documenti 1
B. Vassoio di espulsione 1
C. Piastra di messa a terra inferiore 1
D. Piastra di connessione 1
E. Copri connettore 1
F. Guida di espulsione 1
G. Contenitore punti 1
H. Vite M4 × 8 3
I. Vite M4 × 20 2

Rimuovere tutti i nastri adesivi e/o i materiali di protezione dalle parti fornite.

附属品
A. 装订器 1
B. 排纸托盘 1
C. 下部接地板 1
D. 连接板 1
E. 接插件盖板 1
F. 排纸导向板 1
G. 装订针盒 1
H. M4×8 螺丝 1
I. M4×20 螺丝 2

如果附属品上带有固定胶带，缓冲材料时务必揭下。

동봉품
A. 도큐먼트 피니셔 1
B. 배출 트레이 1
C. 접지판 하 1
D. 연결판 1
E. 커넥터 커버 1
F. 배출 가이드 1
G. 스테이플 카트리지 1
H. 나사 M4×8 1
I. 나사 M4×20 2

동봉품에 고정 테이프 , 완충재가 붙어 있는 경우에는 반드시 제거하십시오 .

同梱品
A. ドキュメントフィニッシャー 1
B. 排出トレイ 1
C. アース板下 1
D. 連結板 1
E. コネクターカバー 1
F. 排出ガイド 1
G. ステープルカートリッジ 1
H. ビス M4×8 1
I. ビス M4×20 2

同梱品に固定テープ、緩衝材がついている場合は、必ず取り外すこと。

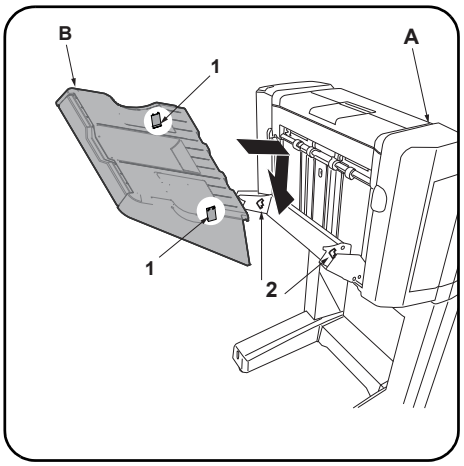

NOTICE
The Attachment Kit (AK-730 or AK-731) must be installed before the document finisher is installed.

Procedure
Before starting installation, be sure to turn the main power switch of the machine off, and unplug the power plug from the wall outlet.

1. Install eject tray (B) to document finisher (A) by inserting the 2 hooks (1) on the back of the tray in the holes (2) of the finisher lift plate.

REMARQUE
Le kit de fixation (AK-730 ou AK-731) doit être installé avant d'installer le finisseur de document.

Procédure
Avant de commencer l'installation, s'assurer de mettre la machine hors tension et de débrancher la fiche d'alimentation de la prise murale.

1. Installez le bac d'éjection (B) sur le finisseur de document (A) en insérant les 2 crochets (1) au dos du bac d'éjection (B) dans les trous (2) du dispositif de levage du finisseur.

AVISO
El Kit de conexión (AK-730 o AK-731) se debe instalar antes de instalarse el finalizador de documentos.

Procedimiento
Antes de iniciar la instalación, asegúrese de apagar el interruptor de encendido de la máquina y desenchufar el cable de alimentación de la toma de pared.

1. Instale la bandeja de salida (B) en el finalizador de documentos (A); para ello, inserte los 2 enganches (1) de la parte posterior de la bandeja en los orificios (2) de la placa de elevación del finalizador.

ANMERKUNG
Das Attachment Kit (AK-730 oder AK-731) muss installiert werden, bevor der Finisher installiert wird.

Vorgehensweise
Bevor Sie mit der Installation beginnen überzeugen Sie sich, dass der Netzschalter des Geräts ausgeschaltet und das Stromkabel aus der Steckdose gezogen ist.

1. Setzen Sie das Ausgabefach (B) in den Finisher (A), indem Sie die 2 Haken (1) auf der Rückseite des Fachs in die beiden Löcher (2) der Finisher-Lift-Platte einsetzen.

AVVISO
Installare l'unità Attachment Kit (AK-730 o AK-731) prima di collegare il finisher documenti.

Procedura
Prima di iniziare l'installazione, spegnere la macchina e scollegare la spina dalla presa di corrente.

1. Installare il vassoio di uscita (B) sul finisher documenti (A) inserendo i 2 ganci (1) sul retro del vassoio nei fori (2) della piastra di elevazione del finisher.

注意
安装装订器前，必须先安装连接组件（AK-730 或 AK-731）。

安装步骤
安装前务必关闭机器的主电源开关，并从墙壁插座拔下电源插头。

1. 将排纸托盘（B）内侧的 2 个挂钩（1）装入装订器（A）的升降板的孔（2）中。

주의
도큐먼트 피니셔를 설치하기 전에 어태치먼트 키트(AK-730 또는 AK-731)를 설치해야 합니다 .

장착순서
설치를 시작하기 전에 반드시 본체의 주 전원 스위치를 끄고 벽 콘센트에서 전원 플러그를 분리하십시오 .

1. 배출 트레이(B)의 후면 후크(1) 2 개를 문서 피니셔(A)의 리프트 플레이트 구멍(2)에 장착합니다 .

注意
ドキュメントフィニッシャーを取り付ける前に、アタッチメントキット(AK-730 または AK-731）の取り付けをおこなうこと。

取付手順
必ず機械本体の主電源スイッチを OFF にし、機械本体の電源プラグを抜いてから作業すること。

1. 排出トレイ（B）の裏側のフック（1)2 個をドキュメントフィニッシャー(A）の昇降板の穴（2）に入れて、取り付ける。

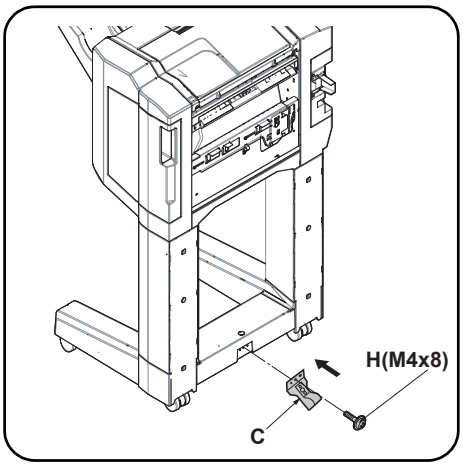

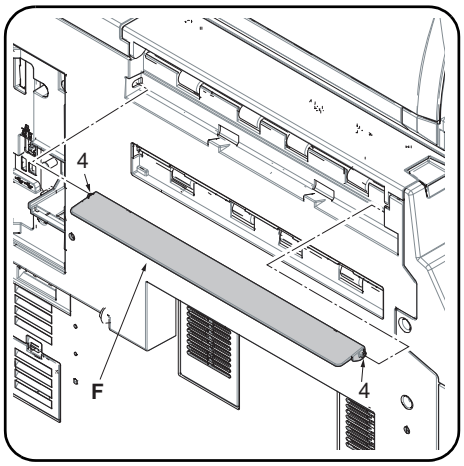

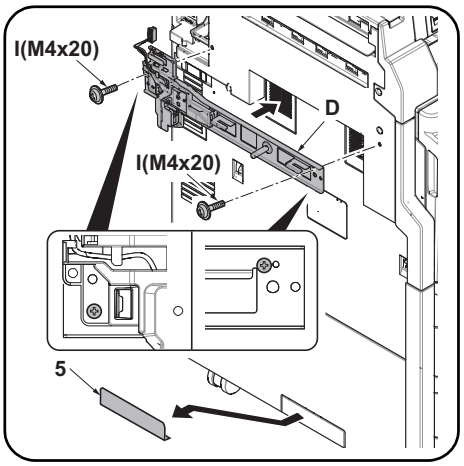

2. Secure the lower earth plate (C) with M4 × 8 screws (H).

3. Install the eject guide (F) by fitting the 2 eject guide pins (4) into the holes in the machine.

4. Attach the connecting plate (D) to the machine using 2 M4 × 20 screws (I). Attach them at the point as shown above.
5. Remove the breakaway cover (5) from the left cover.

---

2. Fixez la plaque de terre inférieure (C) avec des vis M4 × 8 (H).

3. Installer le guide d'éjection (F) en insérant les 2 ergots du guide d'éjection (4) dans les trous de la machine.

4. Fixez la plaque de connexion (D) à la machine à l'aide de 2 vis M4 × 20 (I). Raccordez-les au point indiqué ci-dessus.
5. Déposer le capot amovible (5) du capot gauche.

---

2. Fije la placa de conexión a tierra inferior (C) con tornillos M4 × 8 (H).

3. Instale la guía de salida (F) encajando los 2 clavijas de la guía de salida (4) en los orificios de la máquina.

4. Fije la placa de conexión (D) a la máquina mediante 2 tornillos M4 × 20 (I). Conéctelas en el punto que se muestra arriba.
5. Quite la cubierta divisoria (5) de la cubierta izquierda.

---

2. Befestigen Sie die untere Grundplatte (C) mit den M4 x 8 Schrauben (H).

3. Installieren Sie die Ausgabeführung (F), indem Sie die beiden Stifte (4) der Auswerfführung in die Aufnahmen des Geräts einsetzen.

4. Bringen Sie die Verbindungsplatte (D) mit 2 M4 × 20 Schrauben (I) am Gerät an. Bringen Sie diese an der in der Abbildung gezeigten Stelle an.
5. Nehmen Sie die Ablösungsabdeckung (5) von der linken Abdeckung ab.

---

2. Fissare la piastra di messa a terra inferiore (C) con le viti M4 × 8 (H).

3. Installare la guida di espulsione (F) inserendo i 2 perni (4) della guida di espulsione nei fori della macchina.

4. Applicare la piastra di connessione (D) alla macchina utilizzando le 2 viti M4 × 20 (I). Fissare nella posizione sopra indicata.
5. Rimuovere il coperchio di distacco (5) dal coperchio sinistro.

---

2. 使用 M4×8(H) 螺丝来固定下部接地板 (C)。

3. 将排纸导向板 (F) 的 2 根销钉 (4) 插入机器的孔中。

4. 使用 2 颗 M4×20(I) 螺丝将连接板 (D) 安装到机器上。按图示位置来安装。
5. 去除左侧盖板上的可去除部 (5)。

---

2. 지판 하 (C) 를 나사 M4×8(H) 로 고정합니다 .

3. 배출 가이드 (F) 의 핀 (4) 2 개를 본체의 구멍에 맞추어 끼워서 부착합니다 .

4. 나사 M4 × 20(I) 2 개를 사용하여 연결판 (D) 을 본체에 부착합니다 . 위에 표시된 위치에 부착합니다 .
5. 좌측 커버의 분할커버부 (5) 를 떼어 냅니다 .

---

2. アース板下 (C) をビス M4×8(H) で固定する。

3. 排出ガイド (F) のピン (4)2 本を機械本体の穴に差し込み取り付ける。

4. 連結板 (D) をビス M4×20(I)2 本で、機械本体に取り付ける。図の位置で取り付けること。
5. 左カバーの割りカバー部 (5) を切り取る。

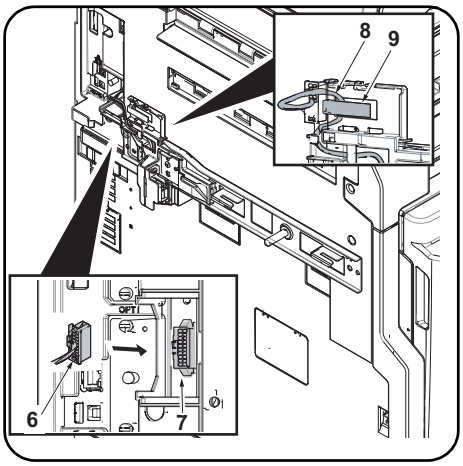

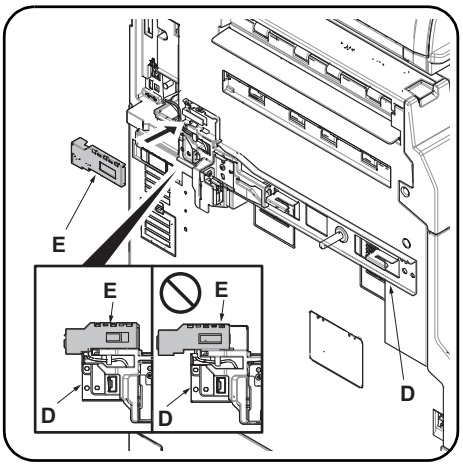

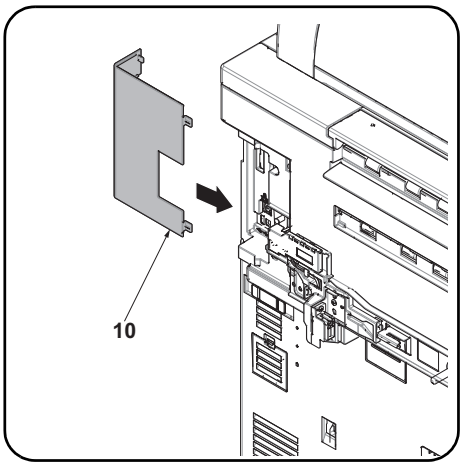

6. Connect the signal line connector (6) to the connector (7) on the machine.Hook the signal line wire (8) onto the hook (9).

7. Fit the connector cover (E) in the connecting plate (D).Take care not to get the cable pinched by objects.Attach it at the point as shown above.Check that the signal line connector is covered by the connector cover (E).

8. Attach the interface cover (10)* on the machine.
* The cover which was removed while installing the AK-730 or AK-731.

---

6. Raccorder le connecteur de ligne de signal (6) sur le connecteur (7) de la machine. Accrocher le fil de ligne de signal (8) sur le crochet (9).

7. Placer le cache de connecteur (E) dans la plaque de connexion (D). Prendre soin à ne pas pincer le câble. Raccordez-les au point indiqué ci-dessus. Vérifier que le connecteur de ligne de signal est couvert par le cache de connecteur (E).

8. Raccordez le capot d'interface (10)* à la machine.
* Le cache qui a été retiré lors de l'installation de l'AK-730 ou AK-731.

---

6. Conecte el conector de línea de señales (6) al conector (7) de la máquina. Enganche el cable de la línea de señales (8) en el enganche (9).

7. Acople la cubierta del conector (E) en la placa de conexión (D). Tenga cuidado de que el cable no quede atrapado por objetos. Conéctelas en el punto que se muestra arriba. Compruebe que el conector de la línea de señales quede cubierto por la cubierta del conector (E).

8. Conecte la cubierta de interfaz (10)* de la máquina.
* La cubierta que se quitó al instalar el kit AK-730 o AK-731.

---

6. Verbinden Sie den Stecker der Signalleitung (6) mit dem Steckverbinder im Gerät (7). Hängen Sie das Kabel der Signalleitung (8) in den Befestigungshaken (9) ein.

7. Setzen Sie die Stecker-Abdeckung (E) in die Verbindungsplatte (D) ein. Stellen Sie sicher, dass das Kabel nicht eingeklemmt wird. Bringen Sie diese an der in der Abbildung gezeigten Stelle an. Überprüfen Sie, ob der Stecker der Signalleitung von der Stecker-Abdeckung (E) abgedeckt ist.

8. Bringen Sie die Schnittstellenabdeckung (10)* am Gerät an.
* Die Abdeckung, die zur Installation des AK-730 oder AK-731 entfernt wurde

---

6. Collegare il connettore di linea del segnale (6) al connettore (7) sulla periferica. Agganciare il cavo di linea del segnale (8) al gancio (9).

7. Inserire il copri connettore (E) nella piastra di connessione (D). Fare attenzione a non impigliare il cavo. Fissare nella posizione sopra indicata. Controllare che il connettore della linea del segnale sia coperto dal copri connettore (E).

8. Fissare la copertura di interfaccia (10)* sulla macchina.
* Il coperchio che è stato rimosso per installare il kit AK-730 o AK-731

---

6. 把信号线的接插件 (6) 和机器本体的接插件 (7) 相连接。 把信号线 (8) 挂到挂钩 (9) 上。

7. 将接插件盖板 (E) 嵌入到连接板 (D)。 请注意不要夹住电线。 按图示位置来安装。 请确认信号线的接插件是否完全隐藏在接插件盖板中 (E)。

8. 将接口盖板 (10)＊安装到机器主机。
＊ 安装 AK-730 或 AK-731 时，取下的盖板

---

6. 시그널 라인 연결커넥터 (6) 를 본체의 커넥터 (7) 에 연결합니다 . 시그널 라인 와이어 (8) 를 후크 (9) 에 겁니다 .

7. 커넥터 커버 (E) 를 연결판 (D) 에 맞추어 끼웁니다 . 케이블이 커넥터 커버 (E) 에 끼이지 않도록 주의합니다 . 위에 표시된 위치에 부착합니다 . 시그널라인 커넥터가 커넥터 커버 (E) 에 덮여있는지 확인합니다 .

8. 인터페이스 커버 (10)* 를 본체에 부착합니다 .
* AK-730 또는 AK-731 설치 시 분리한 커버 .

---

6. 信号線のコネクター(6) を機械本体のコネクター(7) に接続する。信号線 (8) は、フック (9) に掛けること。

7. コネクターカバー(E) を連結板 (D) にはめ込む。電線を挟み込まない様注意すること。図の位置で取り付けること。信号線のコネクターがコネクターカバー(E) で隠れていることを確認する。

8. 機械本体にインターフェイスカバー(10)＊を取り付ける。
＊ AK-730 または AK-731 設置時に取り外したカバー

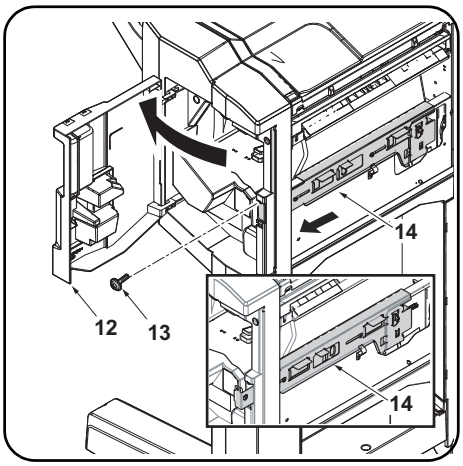

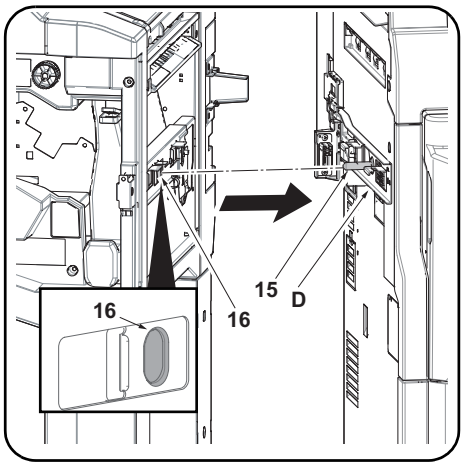

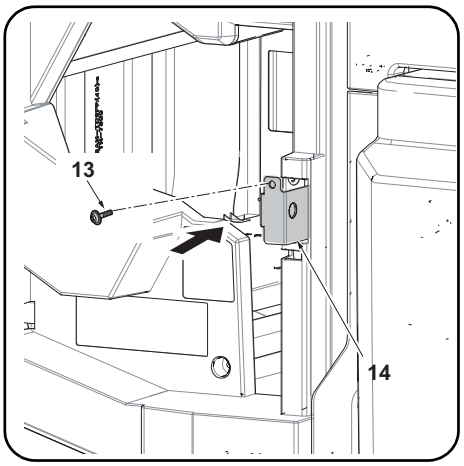

9. Open the document finisher front cover (12).Remove the screw (13).Pull the lock frame (14) frontwards.

10. Insert the pin (15) on the connecting plate (D) into the hole (16) on the document finisher. Connect the document finisher to the machine.
* If the document finisher doesn't comply with the reference of the height as described on page 14, adjust the height.

11. Slowly push the lock frame (14) fully into the machine so that the connectors at the far end are connected.
12. Secure the lock frame (14) using the screw (13) removed in step 9.

---

9. Ouvrir le capot avant du finisseur de document (12). Retirez la vis (13). Tirer le cadre de verrouillage (14) vers le bas.

10. Introduire l'ergot (15) sur la plaque de connexion (D) dans le trou (16) sur le finisseur de document. Connecter le finisseur de document sur la machine.
* Si le finisseur de document n'est pas conforme à la référence de hauteur comme décrit à la page 14, ajustez la hauteur.

11. Pousser doucement le cadre de verrouillage (14) à fond dans la machine de sorte que les connecteurs à l'extrémité soient raccordés.
12. Fixez le bâti de verrouillage (14) à l'aide de la vis (13) déposée à l'étape 9.

---

9. Abra la cubierta frontal del finalizador de documentos (12). Quite el tornillo (13). Empuje el marco de cierre (14) hacia delante.

10. Inserte la clavija (15) de la placa de conexión (D) en el orificio (16) del finalizador de documentos. Conecte el finalizador de documentos a la máquina.
* Si el finalizador de documentos no cumple con la referencia de altura como se describe en la página 14, ajuste la altura.

11. Empuje lentamente y hasta el fondo el marco del cierre (14) hacia la máquina de modo que se conecten los conectores en el extremo más lejano.
12. Asegure la carcasa de bloqueo (14) por medio del tornillo (13) quitado en el paso 9.

---

9. Öffnen Sie die vordere Abdeckung des Finishers (12). Entfernen Sie die Schraube (13). Ziehen Sie die Verriegelung (14) nach vorne.

10. Setzen Sie den Stift (15) der Verbindungsplatte (D) in die Öffnung (16) des Finishers. Verbinden Sie den Finisher mit dem Gerät.
* Falls die Höhe des Finishers nicht mit der auf Seite 14 in der Referenz beschriebenen Höhe übereinstimmt, justieren Sie die Höhe.

11. Schieben Sie die Verriegelung (14) wieder langsam ins Gerät, so dass die Verbindungen am anderen Ende des Geräts geschlossen werden.
12. Befestigen Sie den Fixierrahmen (14) mit der in Schritt 9 entfernten Schraube (13).

---

9. Aprire il coperchio frontale del finisher documenti (12). Togliere la vite (13). Tirare in avanti la frame di blocco (14).

10. Inserire il perno (15) della piastra di connessione (D) nel foro (16) del finisher documenti. Collegare il finisher documenti alla macchina.
* Se il finisher documenti non è conforme con il riferimento altezza come descritto a pagina 14, regolare l'altezza.

11. Spingere lentamente la frame di blocco (14) nella macchina in modo che i connettori all'estremità risultino collegati.
12. Fissare il telaio di bloccaggio (14) utilizzando la vite (13) rimossa nel passo 9.

---

9. 打开装订器的前盖板（12）。 取下螺丝（13）。 向身体前侧拉出固定架（14）。

10. 将连接板（D）的销钉（15）插入装订器的孔（16）中。 把装订器连接到机器本体。
※ 若不符合 P14 的【高度调整】的基准时，执行【高度调整】。

11. 慢慢的把固定架（14）完全推入机器，这样机器里侧的接插件就可以顺利连接。
12. 使用步骤 9 中取下的 1 颗螺丝（13）来固定锁框（14）。

---

9. 도큐먼트 피니셔의 상단 프론트 커버 (12) 를 엽니다 . 나사 (13) 를 제거합니다 . 잠금 프레임 (14) 을 앞으로 뺍니다 .

10. 연결판 (D) 의 핀 (15) 을 두큐먼트 피니셔의 구멍 (16) 에 삽입합니다 . 도큐먼트 피니셔를 본체에 연결합니다 .
※ 연결할 도큐먼트 피니셔가 14 페이지에 설명된 높이 기준에 부합하지 않으면 높이를 조정하십시오 .

11. 본체 뒷쪽의 커넥터가 연결되도록 잠금 프레임 (14) 을 본체 안으로 천천히 밀어 넣습니다 .
12. 스텝 9 에서 뺀 나사 (13)1 개로 잠금 프레임 (14) 을 고정합니다 .

---

9. ドキュメントフィニッシャーの前カバー（12）を開く。ビス（13）を外す。ロックフレーム（14）を手前に引く。

10. 連結板（D）のピン（15）をドキュメントフィニッシャーの穴（16）に挿入する。ドキュメントフィニッシャーを機械本体に接続する。
※P14 の「高さ調整」の基準に適合しない場合は、「高さ調整」を行う。

11. 機械奥側のコネクタが接続されるように、ロックフレーム（14）をゆっくり奥に押す。
12. 手順 9 で外したビス（13）で、ロックフレーム（14）を固定する。

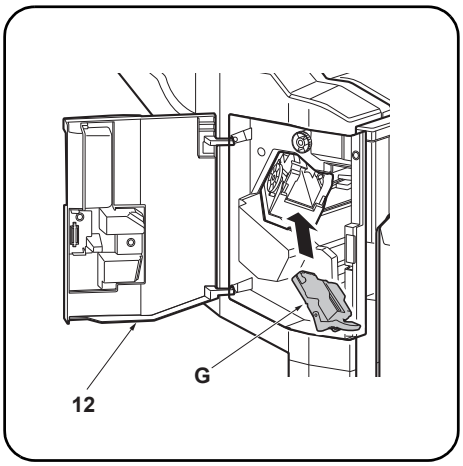

13. Install the staple cartridge (G).
14. Close the front cover (12).

Proceed to adjusting the stapling position on page 18.

---

13. Installer la cartouche d'agrafes (G).
14. Refermer le capot avant (12).

Passez à l'ajustement de la position d'agrafage page 18.

---

13. Instale el cartucho de grapas (G).
14. Cierre la cubierta frontal (12).

Proceda al ajuste de la posición de grapado en la página 18.

---

13. Installieren Sie das Heftklammer-Magazin (G).
14. Schließen Sie die vordere Abdeckung (12).

Fahren Sie mit der Justage der Heftposition auf Seite 18 fort.

---

13. Installare il contenitore punti (G).
14. Chiudere il pannello anteriore (12).

Proseguire con la regolazione della posizione di pinzatura a pagina 18.

---

13. 安装装订针盒 (G)。
14. 关闭前盖板 (12)。

跳至 P18「调节装订位置」。

---

13. 스테이플 카트리지 (G) 를 설치합니다 .
14. 상단 프론트 커버 (12) 를 닫습니다 .

18 페이지의 스테이플 위치 조정을 진행합니다 .

---

13. ステープルカートリッジ (G) を取り付ける。
14. 前カバー(12) を閉じる。

P18「ステープル位置の調整」に進む。

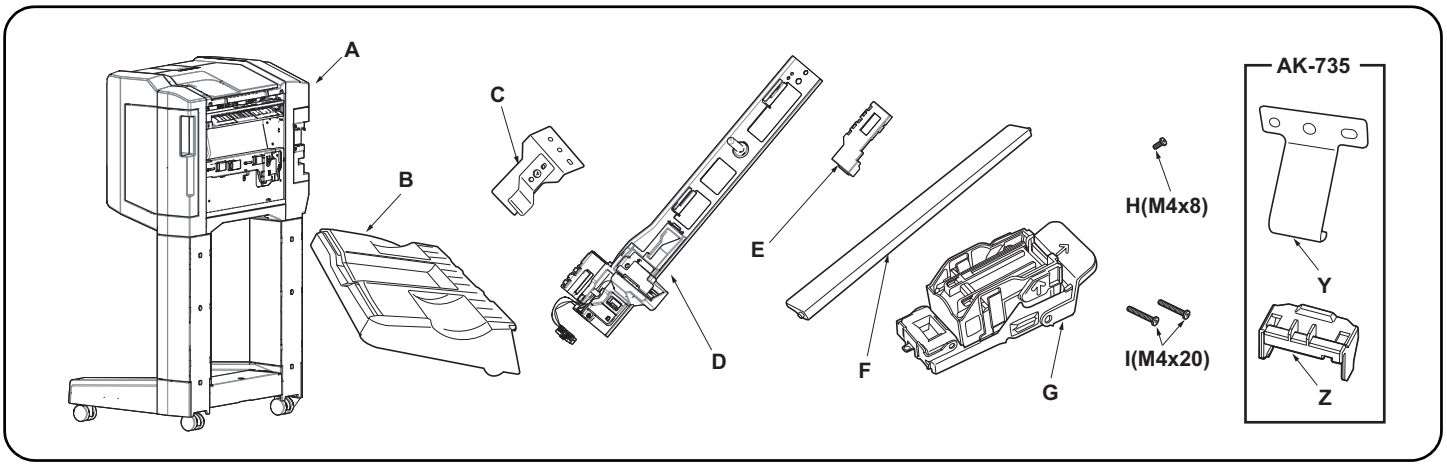

Supplied parts

A. Document finisher 1
B. Eject tray 1
C. Lower earth plate 1
D. Connecting plate 1
E. Connector cover 1
F. Eject guide 1
G. Staple cartridge 1
H. M4 × 8 screw 1
I. M4 × 20 screw 2
Y. Earth Plate 1
Z. Cover 1

(C) and (Z) are not used.

Be sure to remove any tape and/or cushioning materials from the parts supplied.

Pièces fournies

A. Finisseur de document 1
B. Bac d'éjection 1
C. Plaque de terre inférieure 1
D. Plaque de connexion 1
E. Cache de connecteur 1
F. Guide d'éjection 1
G. Cartouche d'agrafes 1
H. Vis M4 × 8 1
I. Vis M4 × 20 2
Y. Plaque de terre 1
Z. Capot 1

(C) et (Z) ne sont pas utilisés.

Veillez à retirer les morceaux de bande adhésive et/ou les matériaux de rembourrage des pièces fournies.

Partes suministradas

A. Finalizador de documentos 1
B. Bandeja de salida 1
C. Placa de conexión a tierra inferior 1
D. Placa de conexión 1
E. Cubierta del conector 1
F. Guía de salida 1
G. Cartucho de grapas 1
H. Tornillo M4 × 8 1
I. Tornillo M4 × 20 2
Y. Placa de conexión a tierra 1
Z. Cubierta 1

(C) y (Z) no se utilizan.

Asegúrese de despegar todas las cintas y/o material amortiguador de las partes suministradas.

Enthaltene Teile

A. Finisher 1
B. Auswerffach 1
C. Untere Grundplatte 1
D. Verbindungsplatte 1
E. Stecker-Abdeckung 1
F. Ausgabeführung 1
G. Heftklammer-Magazin 1
H. M4 × 8 Schraube 1
I. M4 × 20 Schraube 2
Y. Grundplatte 1
Z. Abdeckung 1

(C) und (Z) werden nicht benötigt.

Stellen Sie sicher, dass sämtliche Klebebänder und/oder Polstermaterial von den gelieferten Teilen entfernt wurden.

Parti fornite

A. Finisher documenti 1
B. Vassoio di espulsione 1
C. Piastra di messa a terra inferiore 1
D. Piastra di connessione 1
E. Copri connettore 1
F. Guida di espulsione 1
G. Contenitore punti 1
H. Vite M4 × 8 1
I. Vite M4 × 20 2
Y. Piastra di messa a terra 1
Z. Coperchio 1

(C) e (Z) non sono utilizzati.

Rimuovere tutti i nastri adesivi e/o i materiali di protezione dalle parti fornite.

附属品

A. 装订器 1
B. 排纸托盘 1
C. 下部接地板 1
D. 连接板 1
E. 接插件盖板 1
F. 排纸导向板 1
G. 装订针盒 1
H. M4×8 螺丝 1
I. M4×20 螺丝 2
Y. 接地板 1
Z. 盖板 1

不使用 (C) 和 (Z)。

如果附属品上带有固定胶带，缓冲材料时务必揭下。

동봉품

A. 도큐먼트 피니셔 1
B. 배출 트레이 1
C. 접지판 하 1
D. 연결판 1
E. 커넥터 커버 1
F. 배출 가이드 1
G. 스테이플 카트리지 1
H. 나사 M4×8 1
I. 나사 M4×20 2
Y. 접지판 1
Z. 커버 1

(C) 와 (Z) 는 사용되지 않습니다 .

동봉품에 고정 테이프 , 완충재가 붙어 있는 경우에는 반드시 제거하십시오 .

同梱品

A. ドキュメントフィニッシャー 1
B. 排出トレイ 1
C. アース板下 1
D. 連結板 1
E. コネクターカバー 1
F. 排出ガイド 1
G. ステープルカートリッジ 1
H. ビス M4×8 1
I. ビス M4×20 2
Y. アース板 1
Z. カバー 1

(C), (Z) は使用しない。

同梱品に固定テープ、緩衝材がついている場合は、必ず取り外すこと。

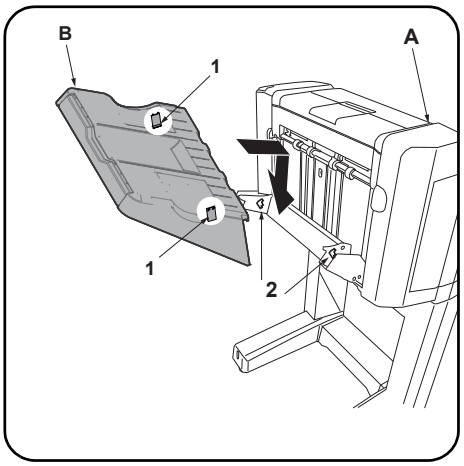

NOTICE
The Attachment Kit (AK-735) must be installed before the document finisher is installed.

Procedure
Before starting installation, be sure to turn the main power switch of the machine off, and unplug the power plug from the wall outlet.

1. Install eject tray (B) to document finisher (A) by inserting the 2 hooks (1) on the back of the tray in the holes (2) of the finisher lift plate.

REMARQUE
Le kit de fixation (AK-735) doit être installé avant d'installer le finisseur de document.

Procédure
Avant de commencer l'installation, s'assurer de mettre la machine hors tension et de débrancher la fiche d'alimentation de la prise murale.

1. Installez le bac d'éjection (B) sur le finisseur de document (A) en insérant les 2 crochets (1) au dos du bac d'éjection (B) dans les trous (2) du dispositif de levage du finisseur.

AVISO
El Kit de conexión (AK-735) se debe instalar antes de instalarse el finalizador de documentos.

Procedimiento
Antes de iniciar la instalación, asegúrese de apagar el interruptor de encendido de la máquina y desenchufar el cable de alimentación de la toma de pared.

1. Instale la bandeja de salida (B) en el finalizador de documentos (A); para ello, inserte los 2 enganches (1) de la parte posterior de la bandeja en los orificios (2) de la placa de elevación del finalizador.

ANMERKUNG
Das Attachment Kit (AK-735) muss installiert werden, bevor der Finisher installiert wird.

Verfahren
Bevor Sie mit der Installation beginnen überzeugen Sie sich, dass der Netzschalter des Geräts ausgeschaltet und das Stromkabel aus der Steckdose gezogen ist.

1. Setzen Sie das Ausgabefach (B) in den Finisher (A), indem Sie die 2 Haken (1) auf der Rückseite des Fachs in die beiden Löcher (2) der Finisher-Lift-Platte einsetzen.

AVVISO
Installare l'unità Attachment Kit (AK-735) prima di collegare il finisher documenti.

Procedura
Prima di iniziare l'installazione, spegnere la macchina e scollegare la spina dalla presa di corrente.

1. Installare il vassoio di uscita (B) sul finisher documenti (A) inserendo i 2 ganci (1) sul retro del vassoio nei fori (2) della piastra di elevazione del finisher.

注意
安装装订器之前，必须先安装连接组件（AK-735）。

安装步骤
安装前务必关闭机器的主电源开关，并从墙壁插座拔下电源插头。

1. 将排纸托盘（B）内侧的 2 个挂钩（1）装入装订器（A）的升降板的孔（2）中。

주의
도큐먼트 피니셔를 설치하기 전에 어태치먼트 키트 (AK-735) 를 설치해야 합니다 .

장착순서
설치를 시작하기 전에 반드시 본체의 주 전원 스위치를 끄고 벽 콘센트에서 전원 플러그를 분리하십시오 .

1. 배출 트레이 (B) 의 후면 후크 (1) 2 개를 문서 피니셔 (A) 의 리프트 플레이트 구멍 (2) 에 장착합니다 .

注意
ドキュメントフィニッシャーを取り付ける前に、アタッチメントキット(AK-735) の取り付けをおこなうこと。

取付手順
必ず機械本体の主電源スイッチを OFF にし、機械本体の電源プラグを抜いてから作業すること。

1. 排出トレイ（B）の裏側のフック（1）2 個をドキュメントフィニッシャー(A) の昇降板の穴（2）に入れて、取り付ける。

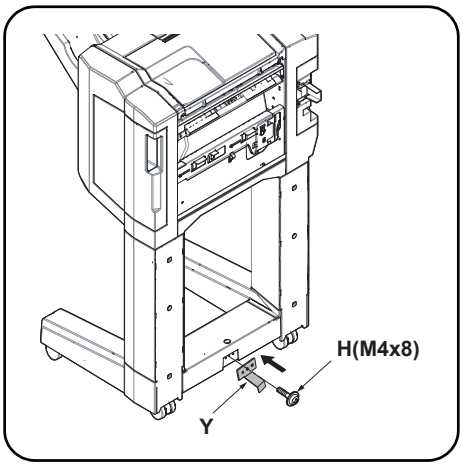

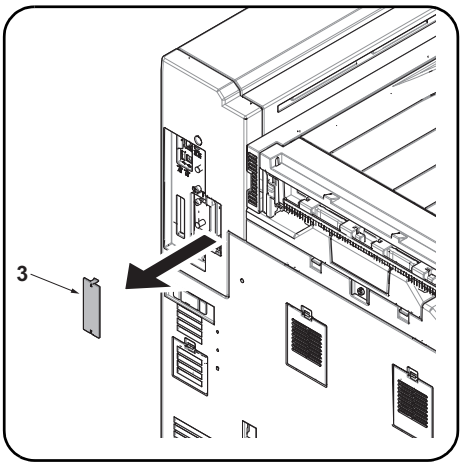

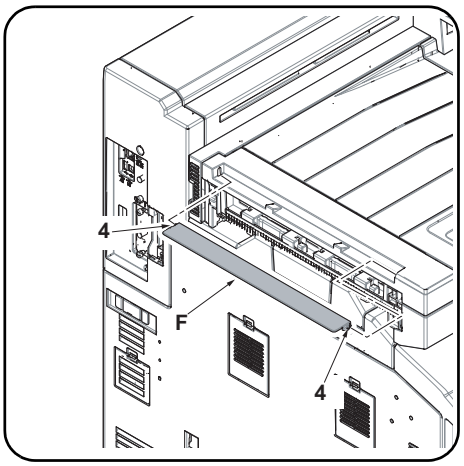

2. Secure the earth plate (Y)* with M4 × 8 screws (H).
*The part was supplied with the AK-735.

3. Remove the machine interface cover (3).

4. Install the eject guide (F) by fitting the 2 eject guide pins (4) into the holes in the machine.

---

2. Fixez la plaque de terre (Y)* avec des vis M4 × 8 (H).
*La pièce a été fournie avec l'AK-735

3. Déposer le couvercle d'interface (3) de la machine.

4. Installer le guide d'éjection (F) en insérant les 2 ergots du guide d'éjection (4) dans les trous de la machine.

---

2. Fije la placa de conexión a tierra (Y)* con tornillos M4 × 8 (H).
*La pieza se proporcionó con AK-735

3. Quite la cubierta de la interfaz (3) de la máquina.

4. Instale la guía de salida (F) encajando los 2 clavijas de la guía de salida (4) en los orificios de la máquina.

---

2. Befestigen Sie die Grundplatte (Y)* mit den M4 x 8 Schrauben (H).
*Dieses Teil ist im AK-735 enthalten.

3. Nehmen Sie die Schnittstellenabdeckung (3) des Geräts ab.

4. Installieren Sie die Ausgabeführung (F), indem Sie die beiden Stifte (4) der Auswerfführung in die Aufnahmen des Geräts einsetzen.

---

2. Fissare la piastra di messa a terra (Y)* con le viti M4 × 8 (H).
*Parte fornita con AK-735

3. Rimuovere la copertura di interfaccia (3) della macchina.

4. Installare la guida di espulsione (F) inserendo i 2 perni (4) della guida di espulsione nei fori della macchina.

---

2. 使用 M4×8(H) 螺丝来固定接地板 (Y)*。
*AK-735 的附属品

3. 拆下机器的接口盖板 (3)。

4. 将排纸导向板 (F) 的 2 根销钉 (4) 插入机器的孔中。

---

2. 나사 M4 × 8(H) 로 접지판 (Y)* 을 고정합니다 .
*AK-735 동봉 부품

3. 본체의 인터페이스 커버 (3) 를 제거합니다 .

4. 배출 가이드 (F) 의 핀 (4) 2 개를 본체의 구멍에 맞추어 끼워서 부착합니다 .

---

2. アース板 (Y)* をビス M4×8(H) で固定する。
*AK-735 の同梱品

3. 機械本体のインターフェイスカバー(3) を取り外す。

4. 排出ガイド (F) のピン (4)2 本を機械本体の穴に差し込み取り付ける。

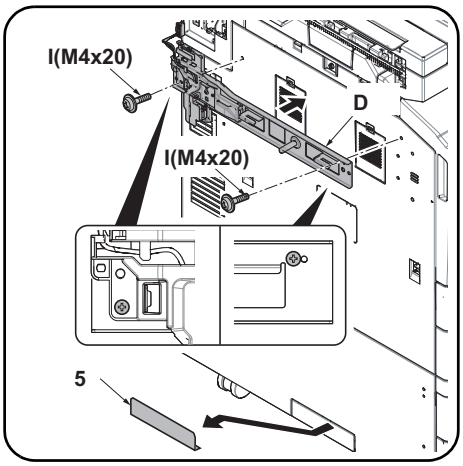

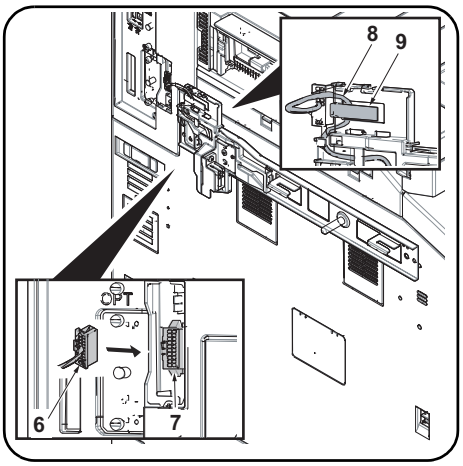

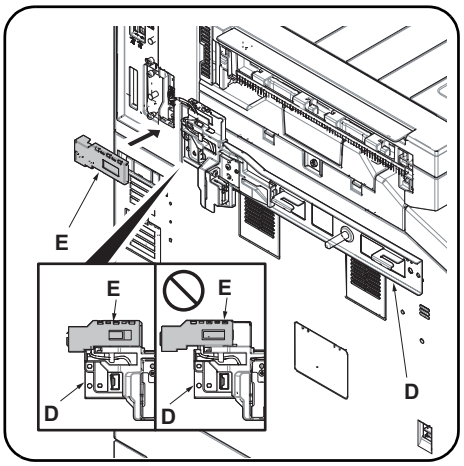

5. Attach the connecting plate (D) to the machine using 2 M4 × 20 screws (I).Attach them at the point as shown above.
6. Remove the breakaway cover (5) from the left cover.

7. Connect the signal line connector (6) to the connector (7) on the machine. Hook the signal line wire (8) onto the hook (9).

8. Fit the connector cover (D) in the connecting plate (E). Take care not to get the cable pinched by objects.Attach it at the point as shown above.Check that the signal line connector is covered by the connector cover (E).

---

5. Fixez la plaque de connexion (D) à la machine à l'aide de 2 vis M4 × 20 (I). Raccordez-les au point indiqué ci-dessus.
6. Déposer le capot amovible (5) du capot gauche.

7. Raccorder le connecteur de ligne de signal (6) sur le connecteur (7) de la machine. Accrocher le fil de ligne de signal (8) sur le crochet (9).

8. Placer le cache de connecteur (D) dans la plaque de connexion (E). Prendre soin à ne pas pincer le câble. Raccordez-les au point indiqué ci-dessus. Vérifier que le connecteur de ligne de signal est couvert par le cache de connecteur (E).

---

5. Fije la placa de conexión (D) a la máquina mediante 2 tornillos M4 × 20 (I). Conéctelas en el punto que se muestra arriba.
6. Quite la cubierta divisoria (5) de la cubierta izquierda.

7. Conecte el conector de línea de señales (6) al conector (7) de la máquina. Enganche el cable de la línea de señales (8) en el enganche (9).

8. Acople la cubierta del conector (D) en la placa de conexión (E). Tenga cuidado de que el cable no quede atrapado por objetos. Conéctelas en el punto que se muestra arriba. Compruebe que el conector de la línea de señales quede cubierto por la cubierta del conector (E).

---

5. Bringen Sie die Verbindungsplatte (D) mit 2 M4 × 20 Schrauben (I) am Gerät an. Bringen Sie diese an der in der Abbildung gezeigten Stelle an.
6. Nehmen Sie die Ablösungsabdeckung (5) von der linken Abdeckung ab.

7. Verbinden Sie den Stecker der Signalleitung (6) mit dem Steckverbinder im Gerät (7). Hängen Sie das Kabel der Signalleitung (8) in den Befestigungshaken (9) ein.

8. Setzen Sie die Stecker-Abdeckung (D) in die Verbindungsplatte (E) ein. Stellen Sie sicher, dass das Kabel nicht eingeklemmt wird. Bringen Sie diese an der in der Abbildung gezeigten Stelle an. Überprüfen Sie, ob der Stecker der Signalleitung von der Stecker-Abdeckung (E) abgedeckt ist.

---

5. Applicare la piastra di connessione (D) alla macchina utilizzando le 2 viti M4 × 20 (I). Fissare nella posizione sopra indicata.
6. Rimuovere il coperchio di distacco (5) dal coperchio sinistro.

7. Collegare il connettore di linea del segnale (6) al connettore (7) sulla periferica. Agganciare il cavo di linea del segnale (8) al gancio (9).

8. Inserire il copri connettore (D) nella piastra di connessione (E). Fare attenzione a non impigliare il cavo. Fissare nella posizione sopra indicata. Controllare che il connettore della linea del segnale sia coperto dal copri connettore (E).

---

5. 使用 2 颗 M4×20(I) 螺丝将连接板 (D) 安装到机器上。 按图示位置来安装。
6. 去除左侧盖板上的可去除部 (5)。

7. 把信号线的接插件 (6) 和机器本体的接插件 (7) 相连接。 把信号线 (8) 挂到挂钩 (9) 上。

8. 将接插件盖板 (E) 嵌入到连接板 (D)。 请注意不要夹住电线。 按图示位置来安装。 请确认信号线的接插件是否完全隐藏在接插件盖板中 (E)。

---

5. 나사 M4 × 20(I) 2 개를 사용하여 연결판 (D) 을 본체에 부착합니다 . 위에 표시된 위치에 부착합니다 .
6. 좌측 커버의 분할커버부 (5) 를 떼어 냅니다 .

7. 시그널 라인 연결커넥터 (6) 를 본체의 커넥터 (7) 에 연결합니다 . 시그널 라인 와이어 (8) 를 후크 (9) 에 겁니다 .

8. 커넥터 커버 (E) 를 연결판 (D) 에 맞추어 끼웁니다 . 케이블이 커넥터 커버 (E) 에 끼이지 않도록 주의합니다 . 위에 표시된 위치에 부착합니다 . 시그널라인 커넥터가 커넥터 커버 (E) 에 덮여있는지 확인합니다 .

---

5. 連結板 (D) をビス M4×20(I)2 本で、機械本体に取り付ける。図の位置で取り付けること。
6. 左カバーの割りカバー部 (5) を切り取る。

7. 信号線のコネクター(6) を機械本体のコネクター(7) に接続する。信号線 (8) は、フック (9) に掛けること。

8. コネクターカバー(E) を連結板 (D) にはめ込む。電線を挟み込まない様注意すること。図の位置で取り付けること。信号線のコネクターがコネクターカバー(E) で隠れていることを確認する。

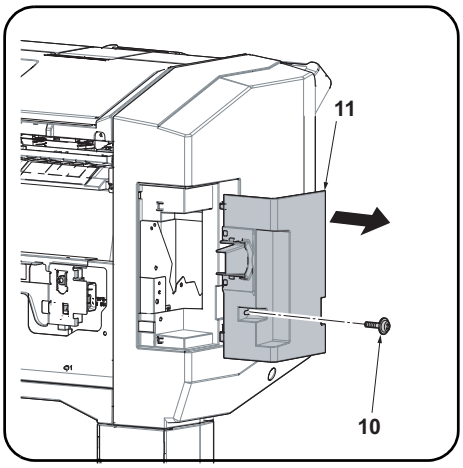

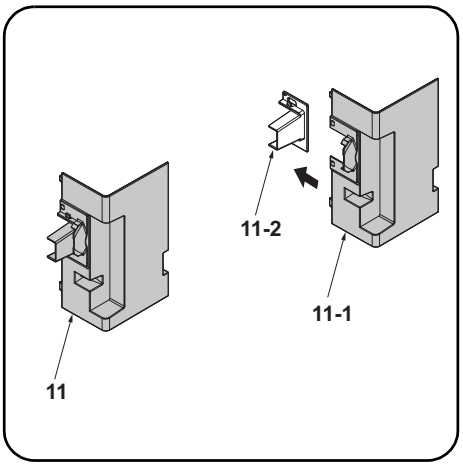

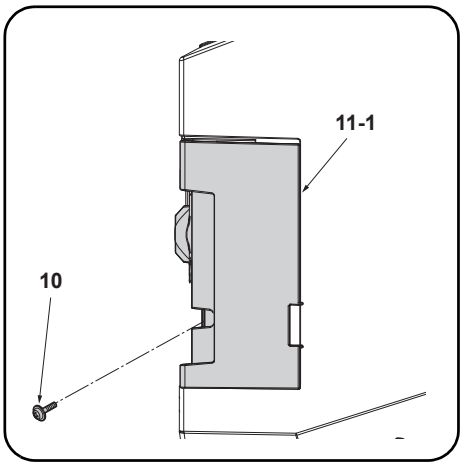

9. Remove the screw (10).Remove the rear cover (11) .

10. Separate the rear cover(11) into the two covers(11-1,11-2).
The cover (11-2) is not used.

11. Install the cover (11-1) using the screw (10) removed in step 9.

---

9. Retirez la vis (10). Retire le capot arrière (11).

10. Séparez le capot arrière (11) en deux capots (11-1, 11-2).
Le capot (11-2) n'est pas utilisé.

11. Installez le capot (11-1) à l'aide de la vis (10) déposée à l'étape 9.

---

9. Quite el tornillo (10). Quite la cubierta posterior (11).

10. Separe la cubierta posterior (11) en las dos cubiertas (11-1, 11-2).
La cubierta (11-2) no se utiliza.

11. Instale la cubierta (11-1) con un tornillo (10) quitado en el paso 9.

---

9. Entfernen Sie die Schraube (10). Entfernen Sie die hintere Abdeckung (11).

10. Teilen Sie die hintere Abdeckung (11) in zwei Abdeckungen (11-1, 11-2) auf.
Die Abdeckung (11-2) wird nicht benötigt.

11. Installieren Sie die Abdeckung (11-1) mit der in Schritt 9 entfernten Schrauben (10).

---

9. Togliere la vite (10). Rimuovere il coperchio posteriore (11).

10. Separare il coperchio posteriore (11) in due coperchi (11-1,11-2).
Il coperchio (11-2) non viene utilizzato.

11. Installare il coperchio (11-1) utilizzando la vite (10) rimossa nel passo 9.

---

9. 取下螺丝（10）。 取下后盖板（11）。

10. 将后盖板（11）分成 2 个盖板（11-1, 11-2）。
不需要盖板（11-2）。

11. 使用在步骤 9 中取下的螺丝（10）来安装盖板（11-1）。

---

9. 나사 (10) 를 제거합니다 . 후면 커버 (11) 를 제거합니다 .

10. 후면 커버 (11) 를 2 개의 커버 (11-1, 11-2) 로 분리합니다 .
커버 (11-2) 는 사용되지 않습니다 .

11. 순서 9 에서 뺀 나사 (10) 를 사용하여 커버 (11-1) 를 장착합니다 .

---

9. ビス（10）を外す。後カバー（11）を取り外す。

10. 後カバー（11）を 2 つのカバー（11-1, 11-2）に分ける。
カバー（11-2）は不要。

11. 手順 9 で外したビス（10）でカバー（11-1）を取り付ける。

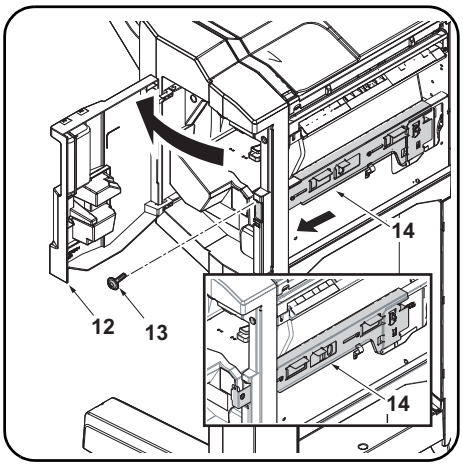

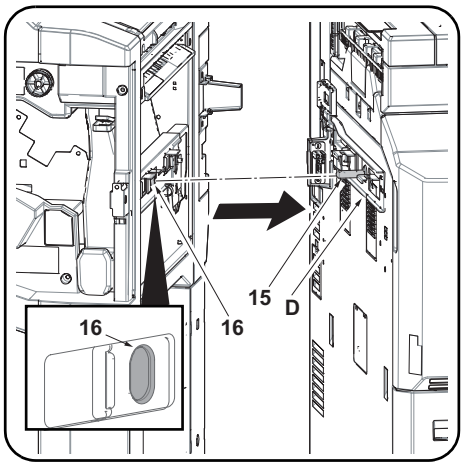

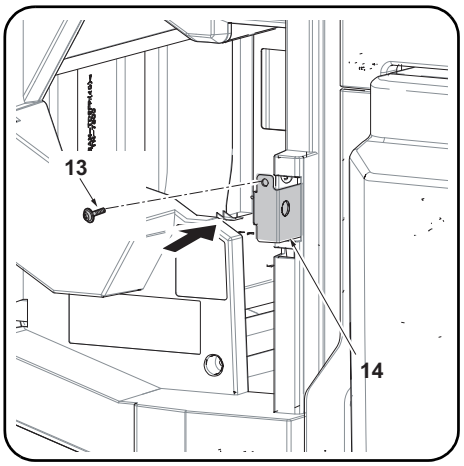

12. Open the document finisher front cover (12).Remove the screw (13). Pull the lock frame (14) frontwards.

13. Insert the pin (15) on the connecting plate (D) into the hole (16) on the document finisher. Connect the document finisher to the machine.
* If the document finisher doesn't comply with the reference of the height as described on page 14, adjust the height.

14. Slowly push the lock frame (14) fully into the machine so that the connectors at the far end are connected.
15. Secure the lock frame (14) using the screw (13) removed in step 12.

---

12. Ouvrir le capot avant du finisseur de document (12). Retirez la vis (13). Tirer le cadre de verrouillage (14) vers le bas.

13. Introduire l'ergot (15) sur la plaque de connexion (D) dans le trou (16) sur le finisseur de document. Connecter le finisseur de document sur la machine.
* Si le finisseur de document n'est pas conforme à la référence de hauteur comme décrit à la page 14, ajustez la hauteur.

14. Pousser doucement le cadre de verrouillage (14) à fond dans la machine de sorte que les connecteurs à l'extrémité soient raccordés.
15. Fixez le bâti de verrouillage (14) à l'aide de la vis (13) déposée à l'étape 12.

---

12. Abra la cubierta frontal del finalizador de documentos (12). Quite el tornillo (13). Empuje el marco de cierre (14) hacia delante.

13. Inserte la clavija (15) de la placa de conexión (D) en el orificio (16) del finalizador de documentos. Conecte el finalizador de documentos a la máquina.
* Si el finalizador de documentos no cumple con la referencia de altura como se describe en la página 14, ajuste la altura.

14. Empuje lentamente y hasta el fondo el marco del cierre (14) hacia la máquina de modo que se conecten los conectores en el extremo más lejano.
15. Asegure la carcasa de bloqueo (14) por medio del tornillo (13) quitado en el paso 12.

---

12. Öffnen Sie die vordere Abdeckung des Finishers (12). Entfernen Sie die Schraube (13). Ziehen Sie die Verriegelung (14) nach vorne.

13. Setzen Sie den Stift (15) der Verbindungsplatte (D) in die Öffnung (16) des Finishers. Verbinden Sie den Finisher mit dem Gerät.
* Falls die Höhe des Finishers nicht mit der auf Seite 14 in der Referenz beschriebenen Höhe übereinstimmt, justieren Sie die Höhe.

14. Schieben Sie die Verriegelung (14) wieder langsam ins Gerät, so dass die Verbindungen am anderen Ende des Geräts geschlossen werden.
15. Befestigen Sie den Fixierrahmen (14) mit der in Schritt 12 entfernten Schraube (13).

---

12. Aprire il coperchio frontale del finisher documenti (12). Togliere la vite (13). Tirare in avanti la frame di blocco (14).

13. Inserire il perno (15) della piastra di connessione (D) nel foro (16) del finisher documenti. Collegare il finisher documenti alla macchina.
* Se il finisher documenti non è conforme con il riferimento altezza come descritto a pagina 14, regolare l'altezza.

14. Spingere lentamente la frame di blocco (14) nella macchina in modo che i connettori all'estremità risultino collegati.
15. Fissare il telaio di bloccaggio (14) utilizzando la vite (13) rimossa nel passo 12.

---

12. 打开装订器的前盖板（12）。 取下螺丝（13）。 向身体前侧拉出固定架（14）。

13. 将连接板（D）的销钉（15）插入装订器的孔（16）中。 把装订器连接到机器本体。
※ 若不符合 P14 的【高度调整】的基准时，执行【高度调整】。

14. 慢慢的把固定架（14）完全推入机器，这样机器里侧的接插件就可以顺利连接。
15. 使用步骤 12 中取下的 1 颗螺丝（13）来固定锁框（14）。

---

12. 도큐먼트 피니셔의 상단 프론트 커버 (12) 를 엽니다 . 나사 (13) 를 제거합니다 . 잠금 프레임 (14) 을 앞으로 뺍니다 .

13. 연결판 (D) 의 핀 (15) 을 두큐먼트 피니셔의 구멍 (16) 에 삽입합니다 . 도큐먼트 피니셔를 본체에 연결합니다 .
※ 연결할 도큐먼트 피니셔가 14 페이지에 설명된 높이 기준에 부합하지 않으면 높이를 조정하십시오 .

14. 본체 뒷쪽의 커넥터가 연결되도록 잠금 프레임 (14) 을 본체 안으로 천천히 밀어 넣습니다 .
15. 스텝 12 에서 뺀 나사 (13)1 개로 잠금 프레임 (14) 을 고정합니다 .

---

12. ドキュメントフィニッシャーの前カバー (12) を開く。ビス (13) を外す。ロックフレーム (14) を手前に引く。

13. 連結板 (D) のピン (15) をドキュメントフィニッシャーの穴 (16) に挿入する。ドキュメントフィニッシャーを機械本体に接続する。
※P14 の「高さ調整」の基準に適合しない場合は、「高さ調整」を行う。

14. 機械奥側のコネクタが接続されるように、ロックフレーム (14) をゆっくり奥に押す。
15. 手順 12 で外したビス(13)で、ロックフレーム(14)を固定する。

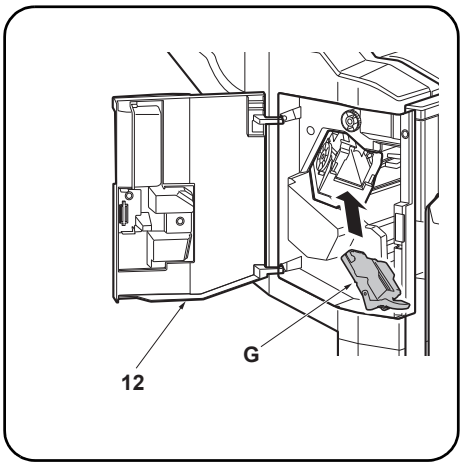

16. Install the staple cartridge (G).
17. Close the front cover (12).

Proceed to adjusting the stapling position on page 18.

---

16. Installer la cartouche d'agrafes (G).
17. Refermer le capot avant (12).

Passez à l'ajustement de la position d'agrafage page 18.

---

16. Instale el cartucho de grapas (G).
17. Cierre la cubierta frontal (12).

Proceda al ajuste de la posición de grapado en la página 18.

---

16. Installieren Sie das Heftklammer-Magazin (G).
17. Schließen Sie die vordere Abdeckung (12).

Fahren Sie mit der Justage der Heftposition auf Seite 18 fort.

---

16. Installare il contenitore punti (G).
17. Chiudere il pannello anteriore (12).

Proseguire con la regolazione della posizione di pinzatura a pagina 18.

---

16. 安装装订针盒 (G)。
17. 关闭前盖板 (12)。

跳至 P18「调节装订位置」。

---

16. 스테이플 카트리지 (G) 를 설치합니다 .
17. 상단 프론트 커버 (12) 를 닫습니다 .

18 페이지의 스테이플 위치 조정을 진행합니다 .

---

16. ステープルカートリッジ (G) を取り付ける。
17. 前カバー(12) を閉じる。

P18「ステープル位置の調整」に進む。

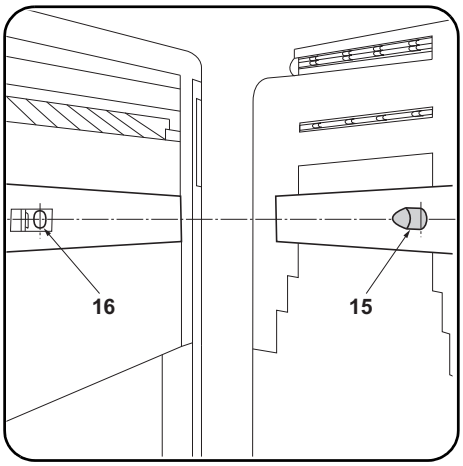

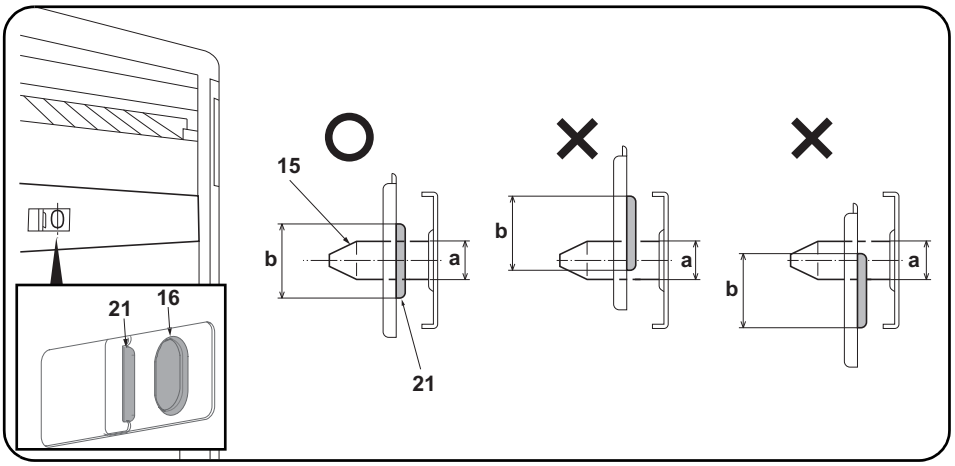

Adjusting the height

1. Check that the respective heights of the pins (15) on the connecting plate installed on the machine and the connecting holes (16) on the document finisher comply with the standards below.

Compliant: The diameter (a) of the pin (15) is within the height range (b) of the curved section (21).
Non-compliant: The diameter (a) of the pin (15) is extends beyond the height range (b) of the curved section (21).
If the heights are non-compliant, use the procedure below to adjust the height.

Réglage de la hauteur

1. Vérifiez que les hauteurs respectives des ergots (15) sur la plaque de connexion installée sur la machine et les trous de connexion (16) sur le finisseur de document sont conformes aux références ci-dessous.

Bon : Le diamètre (a) de l'ergot (15) est dans les limites de hauteur (b) de la partie courbée (21).
Mauvais : Le diamètre (a) de l'ergot (15) dépasse les limites de hauteur (b) de la partie courbée (21).
Si la hauteur n'est pas conforme, l'ajuster en procédant comme indiqué ci-dessous.

Ajuste de la altura

1. Compruebe que las alturas correspondientes de las clavijas (15) de la placa de fijación instalados en la máquina y los orificios de conexión (16) del finalizador de documentos cumplen las referencias de abajo.

Cumple: el diámetro (a) de la clavija (15) está dentro del rango de altura (b) de la sección curvada (21).
No cumple: el diámetro (a) de la clavija (15) sobrepasa el rango de altura (b) de la sección curvada (21).
Si las alturas no cumplen con las especificaciones, utilice el siguiente procedimiento para ajustar la altura.

Einstellen der Höhe

1. Überprüfen Sie, dass die jeweilige Göhe der Stifte (15) der am Gerät installierten Verbindungsplatte und Verbindungsöffnungen (16) des Finishers mit den unten angegebenen Werten übereinstimmen.

Korrekt: Der Durchmesser (a) des Stifts (15) befindet sich im Höhenbereich (b) des Kurvenabschnitts (21).
Nicht korrekt: Der Durchmesser (a) des Stifts (15) ragt über den Höhenbereich (b) des Kurvenabschnitts (21) hinaus.
Falls die Höhen nicht korrekt sind, müssen Sie sie wie folgend einstellen.

Regolazione dell'altezza

1. Controllare che le rispettive altezze dei perni (15) sulla piastra di connessione installata sulla macchina e i fori di connessione (16) sulla finisher documenti corrispondano ai riferimenti mostrati sotto.

Conformità: Il diametro (a) del perno (15) è compreso nella gamma di altezza (b) della sezione curvata (21).
Non conformità: Il diametro (a) del perno (15) si estende oltre la gamma di altezza (b) della sezione curvata (21).
Se le altezze sono non corrispondenti, utilizzare la procedura riportata sotto per regolare l'altezza.

高度调节

1. 确认机器主机上安装的连接板的销钉（15）和装订器的连接用的孔（16）的高度是否符合以下标准。

符　合：销钉（15）的直径 a 在弯曲部（21）的高度 b 的范围内。
不符合：销钉（15）的直径 a 超出了弯曲部（21）的高度 b 的范围。
不符合时，通过以下步骤进行调节。

높이조정

1. 본체에 설치된 연결판의 핀(15)과 도큐먼트 피니셔의 연결용 구멍(16)의 각 높이가 아래의 기준에 부합하는지 확인합니다.

적 합 :핀(15)의 직경 a 가 곡선부(21)의 높이 b 의 범위에 들어간다.
부적합:핀(15)의 직경 a 가 곡선부(21)의 높이 b 의 범위를 넘는다.
부적합의 경우에는 이하의 순서대로 조정합니다.

高さ調整

1. 機械本体に取り付けた連結板のピン（15）とドキュメントフィニッシャーの連結用の穴（16）の高さが以下の基準に適合するか確認する。

適　合:ピン（15）の直径（a）が曲げ部（21）の高さ（b）の範囲に収まっている。
不適合:ピン（15）の直径（a）が曲げ部（21）の高さ（b）の範囲からはみだしている。
不適合の場合は、以下の手順で調整する。

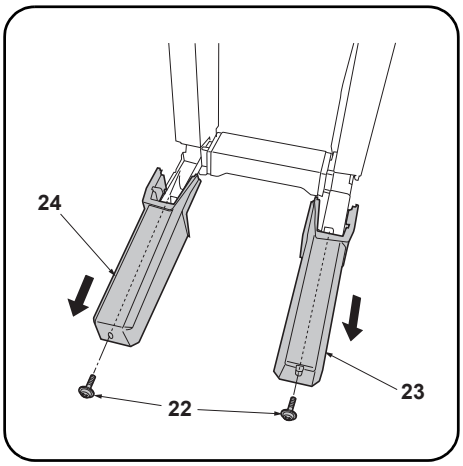

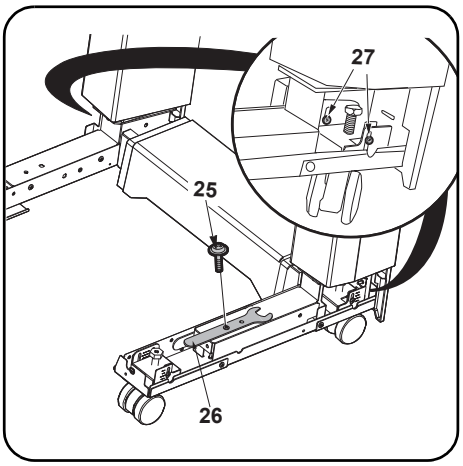

2. Remove each of the screws (22) and remove the front foot cover (23) and rear foot cover (24).

3. Remove the screw (25) to remove the spanner (26).
4. Loosen the 2 screws (27) on the front right and on the rear right of the document finisher.

---

2. Déposer toutes les vis (22) puis le capot du pied avant (23) et le capot du pied arrière (24).

3. Déposer la vis (25) pour libérer la clé (26).
4. Desserrer les 2 vis (27) du côté avant droit et arrière droit du finisseur de document.

---

2. Quite cada uno de los tornillos (22) y quite la cubierta de la pata frontal (23) y la cubierta de la pata posterior (24).

3. Quite el tornillo (25) para extraer la llave inglesa (26).
4. Afloje los 2 tornillos (27) en los lados derecho frontal y derecho posterior del finalizador de documentos.

---

2. Entfernen Sie sämtliche Schrauben (22) und nehmen Sie die Vorderfußabdeckung (23) und die Hinterfußabdeckung (24).

3. Entfernen Sie die Schraube (25), um den Schlüssel (26) abzunehmen
4. Lösen Sie die 2 Schrauben (27) vorne rechts und hinten rechts am Finisher.

---

2. Rimuovere ciascuna delle viti (22) e quindi rimuovere la copertura del piede anteriore (23) e la copertura del piede posteriore (24).

3. Rimuovere la vite (25) per rimuovere la chiave (26).
4. Allentare le 2 viti (27) sulla parte anteriore destra e posteriore destra della finisher documenti.

---

2. 拆除各 1 颗螺丝 (22)，取下前脚座盖板 (23)、后脚座盖板 (24)。

3. 取下螺丝 (25) 以便拆下扳手 (26)。
4. 拧松装订器右前侧与右后侧的各 2 颗螺丝 (27)。

---

2. 나사 (22) 각 1 개를 빼고 풋커버 앞 (23), 풋커버 뒤 (24) 를 뺍니다 .

3. 나사 (25) 1 개를 빼고 , 스패너 (26) 를 떼어 냅니다 .
4. 도큐먼트 피니셔 우측 앞과 뒤의 나사 (27) 각 2 개를 느슨하게 합니다 .

---

2. ビス (22) 各 1 本を外し、フットカバー前 (23)、フットカバー後 (24) を取り外す。

3. ビス (25) 1 本を外し、スパナー (26) を取り外す。
4. ドキュメントフィニッシャー右前と右後のビス (27) 各 2 本を緩める。

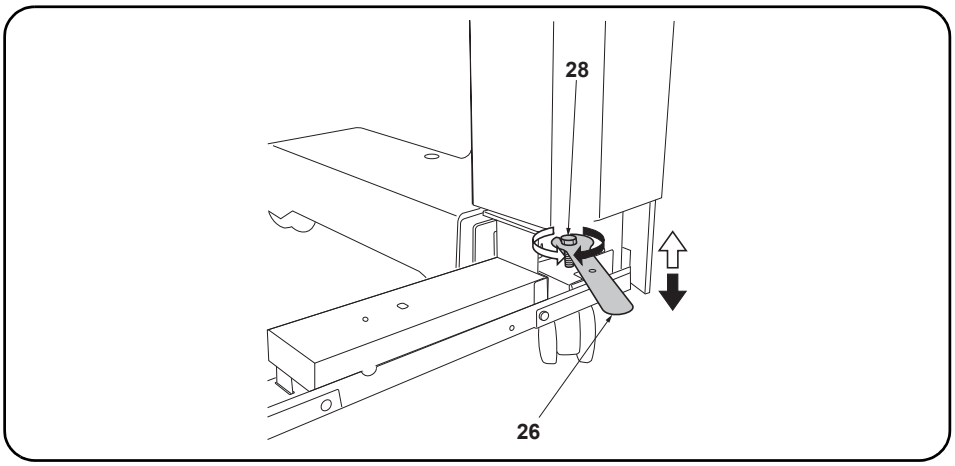

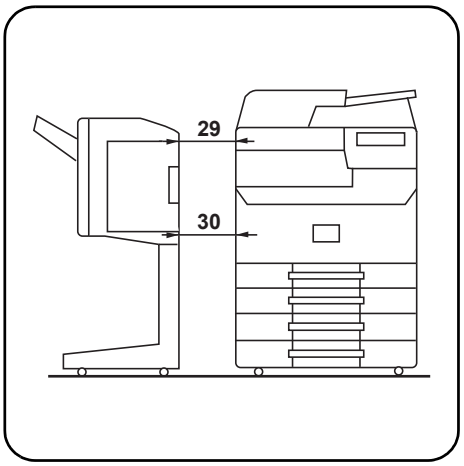

5. Turn the adjustment bolts (28) with the spanner (26) to adjust the height of the document finisher. Turning the adjustment bolt clockwise lifts the document finisher, and turning it counterclockwise lowers the document finisher.
6. Retighten each of the 2 screws (27) and replace the spanner (26).

7. If the distances between the document finisher and the machine (29, 30) are unequal, use the procedure below to adjust the spacing.

---

5. Faire tourner les boulons de réglage (28) avec la clé (26) pour ajuster la hauteur du finisseur de document.
Tourner le boulon de réglage dans le sens horloger pour lever le finisseur de document, et dans le sens contraire au sens horloger pour le descendre.
6. Resserrer les 2 vis (27) et repositionner la clé (26) au même endroit.

7. Si les distances entre le finisseur de document et la machine (29, 30) sont inégales, régler l'espacement en procédant de la manière suivante.

---

5. Gire los pernos de ajuste (28) con la llave inglesa (26) para ajustar la altura del finalizador de documentos.
Al girar el perno de ajuste en la dirección de las manecillas del reloj se levanta el finalizador de documentos y al girar en sentido contrario a las manecillas del reloj baja el finalizador de documentos.
6. Vuelva a apretar los 2 tornillos (27) y coloque la llave inglesa en su lugar (26).

7. Si las distancias entre el finalizador de documentos y la máquina (29, 30) no son iguales, utilice el siguiente procedimiento para ajustar la separación.

---

5. Drehen Sie die Einstellschrauben (28) mit dem Schlüssel (26), um die Höhe des Finishers einzustellen.
Durch Drehen der Einstellschraube im Uhrzeigersinn wird der Finisher angehoben, während er durch Drehen entgegen dem Uhrzeigersinn abgesenkt wird.
6. Ziehen Sie die 2 Schrauben (27) wieder an und verstauen Sie den Schlüssel (26) wieder.

7. Falls die Abstände zwischen dem Finisher und dem Gerät (29, 30) ungleich sind, führen Sie die unten angegebenen Schritte aus, um den Abstand zu korrigieren.

---

5. Ruotare i bulloni di regolazione (28) con la chiave (26) per regolare l'altezza della finisher documenti.
Ruotando il bullone di regolazione in senso orario si solleva la finisher documenti, mentre ruotandolo in senso antiorario si abbassa la finisher documenti.
6. Ristringere ciascuna delle 2 viti (27) e riporre la chiave (26).

7. Se le distanze tra la finisher documenti e la macchina (29, 30) sono diverse, attenersi alla sottostante procedura per regolare la spaziatura.

---

5. 使用扳手（26）旋转调节螺栓（28），以调节装订器的高度。
将调节螺栓向顺时针方向旋转，装订器的高度升高，逆时针方向旋转则装订器的高度降低。
6. 拧紧各 2 颗螺丝（27），按原样安装扳手（26）。

7. 装订器与机器的间隙（29、30）不等时，按以下步骤进行调节。

---

5. 스패너 (26) 로 조정 볼트 (28) 를 돌려 도큐먼트 피니셔의 높이를 조정한다 .
조정 볼트를 시계방향으로 돌리면 도큐먼트 피니셔의 높이가 높아지고, 반 시계방향으로 돌리면 낮아 집니다 .
6. 나사 (27) 각 2 개를 조이고 스패너 (26) 를 원래 자리에 장착합니다 .

7. 도큐먼트 피니셔와 본체의 거리 (29, 30) 가 동일하지 않는 경우 아래의 절차에 따라 간격을 조정합니다 .

---

5. スパナー(26) で調整ボルト（28）を回し、ドキュメントフィニッシャーの高さを調整する。
調整ボルトを時計方向に回すとドキュメントフィニッシャーの高さが高くなり、反時計方向に回すと低くなる。
6. ビス（27）各 2 本を締め付け、スパナー(26) を元通り取り付ける。

7. ドキュメントフィニッシャーと機械本体の間隔（29、30）が等しくない場合は、以下の手順で調整を行う。

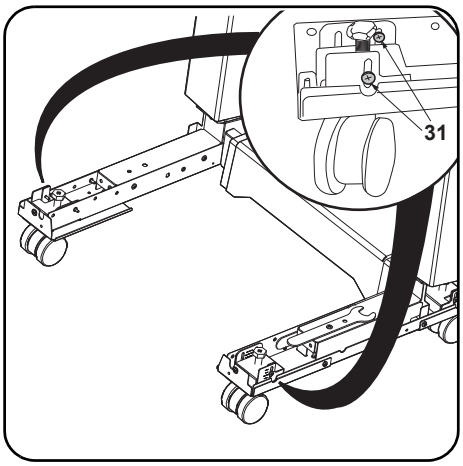

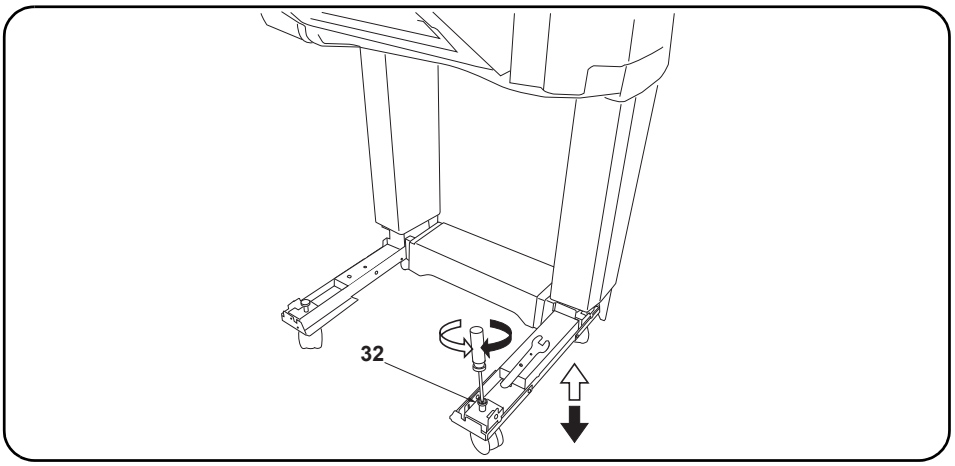

8. Loosen the 2 screws (31) on the front left and on the rear left of the document finisher.

9. Turn the adjustment bolts (32) with a Philips-head screwdriver to adjust the height of the document finisher.
Turning the adjustment bolt clockwise lifts the document finisher, and turning it counterclockwise lowers the document finisher.
10. Retighten each of the 2 screws (31).
11. Replace the front foot cover (23) and rear foot cover (24).

---

8. Desserrer les 2 vis (31) du côté avant gauche et arrière gauche du finisseur de document.

9. Faire tourner les boulons de réglage (32) à l'aide d'un tournevis cruciforme pour ajuster la hauteur du finisseur de document.
Tourner le boulon de réglage dans le sens horloger pour lever le finisseur de document, et dans le sens contraire au sens horloger pour le descendre.
10. Resserrer les 2 vis (31).
11. Reposer le capot du pied avant (23) et le capot du pied arrière (24).

---

8. Afloje los 2 tornillos (31) en los lados izquierdo frontal e izquierdo posterior del finalizador de documentos.

9. Gire los pernos de ajuste (32) con un destornillador de cabeza Philips para ajustar la altura del finalizador de documentos.
Al girar el perno de ajuste en la dirección de las manecillas del reloj se levanta el finalizador de documentos y al girar en sentido contrario a las manecillas del reloj baja el finalizador de documentos.
10. Vuelva a apretar los 2 tornillos (31).
11. Vuelva a colocar la cubierta de la pata frontal (23) y la cubierta de la pata posterior (24).

---

8. Lösen Sie die 2 Schrauben (31) vorne links und hinten links am Finisher.

9. Stellen Sie die Einstellschrauben (32) mit einem Kreuzschlitzschraubendreher ein, um die Höhe des Finishers zu korrigieren.
Durch Drehen der Einstellschraube im Uhrzeigersinn wird der Finisher angehoben, während er durch Drehen entgegen dem Uhrzeigersinn abgesenkt wird.
10. Ziehen Sie die 2 Schrauben (31) nach.
11. Setzen Sie die Vorderfußabdeckung (23) und die Hinterfußabdeckung (24) wieder ein.

---

8. Allentare le 2 viti (31) sulla parte anteriore sinistra e posteriore sinistra della finisher documenti.

9. Ruotare i bulloni di regolazione (32) con un cacciavite con testa a croce tipo Philips per regolare l'altezza della finisher documenti.
Ruotando il bullone di regolazione in senso orario si solleva la finisher documenti, mentre ruotandolo in senso antiorario si abbassa la finisher documenti.
10. Ristringere ciascuna delle 2 viti (31).
11. Ricollocare la copertura del piede anteriore (23) e la copertura del piede posteriore (24).

---

8. 拧松装订器左前侧与左后侧的各 2 颗螺丝 (31)。

9. 使用十字螺丝刀旋转调节螺栓 (32)，以调节装订器的高度。
将调节螺栓向顺时针方向旋转，装订器的高度升高，逆时针方向旋转则装订器的高度降低。
10. 拧紧各 2 颗螺丝 (31)。
11. 将前脚座盖板 (23)、后脚座盖板 (24) 按原样安装

---

8. 도큐먼트 피니셔 좌측 앞과 뒤의 나사 (31) 각 2 개를 느슨하게 합니다 .

9. 플러스 드라이버로 조정 볼트 (32) 를 돌려 도큐먼트 피니셔 높이를 조정합니다 .
조정 볼트를 시계방향으로 돌리면 도큐먼트 피니셔의 높이가 높아지고, 반 시계방향으로 돌리면 낮아 집니다 .
10. 나사 (31) 각 2 개를 조입니다 .
11. 풋커버 앞 (23), 풋커버 뒤 (24) 를 원래대로 장착합니다 .

---

8. ドキュメントフィニッシャー左前と左後のビス (31) 各 2 本を緩める。

9. プラスドライバーで調整ボルト (32) を回し、ドキュメントフィニッシャーの高さを調整する。
調整ボルトを時計方向に回すとドキュメントフィニッシャーの高さが高くなり、反時計方向に回すと低くなる。
10. ビス (31) 各 2 本を締め付ける。
11. フットカバー前 (23)、フットカバー後 (24) を元通りに取り付ける。

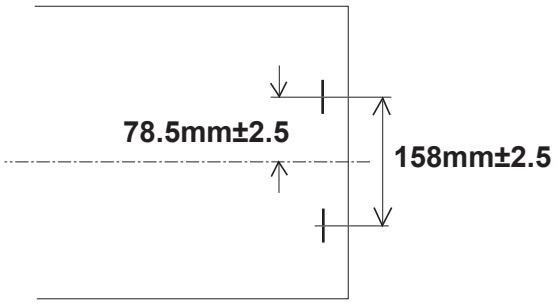

Adjusting the stapling position

1. Connect the machine power plug to the wall outlet and turn the machine main power switch on.
2. Make a test copy using staple mode (double stapled).
3. Check whether the stapling position is off-center.If the staple position is off-center, follow the procedure below to adjust the position.
   <Reference value> 78.5 mm ±2.5 mm from the center of the paper

---

Ajustement de la position d'agrafage

1. Insérer la fiche d'alimentation de la machine dans la prise murale et mettre la machine sous tension.
2. Procéder à une copie d'essai en mode agrafage (double agrafage).
3. Vérifier que la position d'agrafage n'est pas en décalage. Si la position d'agrafage est décalée, la régler en procédant de la manière suivante.
   <Valeur de référence> 78,5 mm ±2,5 mm depuis le milieu de la feuille de papier.

Ajuste de la posición de grapado

1. Conecte el enchufe de la máquina al receptáculo de pared y encienda el interruptor principal de la máquina.
2. Haga una copia de prueba en el modo de grapado (grapado doble).
3. Compruebe si la posición de grapado está descentrada. Si la posición de grapado está descentrada, realice el siguiente procedimiento para ajustar la posición.
   <Valor de referencia> 78,5 mm ± 2,5 mm del centro del papel

---

Justage der Heftposition

1. Stecken Sie den Netzstecker des Geräts in die Wandsteckdose und schalten Sie das Gerät am Gauptschalter ein.
2. Erstellen Sie eine Probekopie im Heftmodus (doppelt geheftet).
3. Prüfen Sie, ob die Heftposition außermittig ist. Falls die Heftposition außermittig ist, müssen Sie sie wie folgend einstellen.
   <Bezugswert> 78,5 mm ±2,5 mm von der Blattmitte

Regolazione della posizione di pinzatura

1. Collegare la spina alla presa di corrente a muro e accendere l'interruttore di alimentazione della macchina.
2. Eseguire una copia di prova utilizzando la modalità di spillatura con punti metallici (spillatura doppia).
3. Verificare che la posizione di spillatura non sia fuori centro. Se la posizione di spillatura è fuori centro, seguire la procedura riportata sotto per regolare la posizione.
   <Valore di riferimento> 78,5 mm ± 2,5 mm dal centro del foglio

---

调节装订位置

1. 将机器上的电源插头插入电源插座中，打开主电源开关。
2. 在装订模式（2 点固定）下进行测试复印。
3. 确认装订位置的中心偏差。 装订位置偏离中心时，按以下步骤进行调节。
   ＜基准值＞ 距离纸张中心 78.5㎜± 2.5㎜

스테이플 위치 조정

1. 본체 전원플러그를 콘센트에 꽂고 주 전원 스위치를 ON 으로 합니다 .
2. 스테이플 모드 (2 곳) 에서 시험복사를 합니다 .
3. 스테이플 위치의 센터 어긋남을 확인합니다 . 스테이플 위치가 중심에서 벗어난 경우다음 순서로 조정을 합니다 .
   ＜기준치＞ 용지 센터에서 78.5mm± 2.5mm

ステープル位置の調整

1. 機械本体の電源プラグをコンセントに差し込み、主電源スイッチを ON にする。
2. ステープルモード(2 箇所止め)でテストコピーを行う。
3. ステープル位置のセンターずれを確認する。ステープル位置が中心からずれていた場合、次の手順で調整を行う。
   ＜基準値＞ 用紙センターより 78.5㎜± 2.5㎜

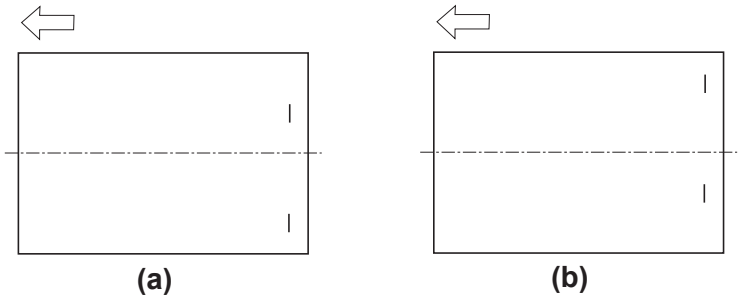

4. Set maintenance mode U246, select [Finisher] and [Staple HP].
5. Adjust the values.
If the paper is stapled too close to the front of the machine (a): Increase the setting value.
If the paper is stapled too close to the rear of the machine (b): Decrease the setting value.
6. Perform a test copy.
7. Repeat steps 4 to 6 until the staple position is within the reference value.
<Reference value> 78.5 mm ±2.5 mm from the center of the paper

---

4. Passer en mode maintenance U246, sélectionner [Finisher] et [Staple HP].
5. Régler les valeurs.
Si le papier est agrafé trop près de l'avant de la machine (a): augmenter la valeur de réglage.
Si le papier est agrafé trop près de l'arrière de la machine (b): réduire la valeur de réglage.
6. Effectuer une copie de test.
7. Recommencer les étapes 4 à 6 jusqu'à ce que la position d'agrafe soit conforme à la valeur de référence
<Valeur de référence> 78,5 mm ±2,5 mm depuis le milieu de la feuille de papier.

---

4. Entre en el modo de mantenimiento U246, seleccione [Finisher] y [Staple HP].
5. Ajuste los valores.
Si el grapado del papel se encuentra demasiado cerca del frente de la máquina (a): aumente el valor de configuración.
Si el grapado del papel se encuentra demasiado cerca de la parte posterior de la máquina (b): disminuya el valor de configuración.
6. Haga una copia de prueba.
7. Repita los pasos 4 a 6 hasta que la posición de grapado se encuentre dentro del valor de referencia.
<Valor de referencia> 78,5 mm ± 2,5 mm del centro del pape

---

4. Schalten Sie in den Wartungsmodus U246, wählen Sie [Finisher] und [Staple HP].
5. Die Werte einstellen.
Falls das Papier zu nahe am vorderen Rand des Geräts (a) abgestapelt wird: Vergrößern Sie den Stellwert.
Falls das Papier zu nahe am hinteren Rand des Geräts (b) abgestapelt wird: Verkleinern Sie den Stellwert.
6. Eine Testkopie erstellen.
7. Wiederholen Sie die Schritte 4 bis 6, bis die Heftposition im Bereich des Bezugswerts liegt.
<Bezugswert> 78,5 mm ±2,5 mm von der Blattmitte

---

4. Impostare la modalità manutenzione U246, selezionare [Finisher] e [Staple HP].
5. Regolare i valori.
Se il foglio viene spillato troppo vicino alla parte anteriore della macchina (a): Aumentare il valore di impostazione.
Se il foglio viene spillato troppo vicino alla parte posteriore della macchina (b): Diminuire il valore di impostazione.
6. Eseguire una copia di prova.
7. Ripetere i passi 4 to 6 finché la posizione di spillatura risulta all'interno del valore di riferimento.
<Valore di riferimento> 78,5 mm ± 2,5 mm dal centro del foglio

---

4. 设置维护模式 U246，选择 [Finisher]、[Staple HP]。
5. 调整设定值。
装订位置向机器前部偏移时 (a)：调高设定值。
装订位置向机器后部偏移时 (b)：调低设定值。
6. 进行测试复印。
7. 重复步骤 4 ～ 6，直到装订位置在基准范围内为止。
＜基准值＞ 距离纸张中心 78.5mm± 2.5mm

---

4. 메인터넌스 모드 U246 을 세트하고 [Finisher], [Staple HP] 를 선택합니다 .
5. 설정치를 조정합니다 .
스테이플 위치가 기기앞측으로 벗어난 경우 (a):설정치를 높입니다 .
스테이플 위치가 기기뒷측으로 벗어난 경우 (b):설정치를 내입니다 .
6. 시험복사를 합니다 .
7. 스테이플 위치가 기준치내가 될 때까지 순서 4 ~ 6 을 반복합니다 .
＜기준치＞ 용지 센터에서 78.5mm± 2.5mm

---

4. メンテナンスモード U246 をセットし、[Finisher]、[Staple HP] を選択する。
5. 設定値を調整する。
ステープル位置が機械前側にずれている場合 (a):設定値を上げる。
ステープル位置が機械後側にずれている場合 (b):設定値を下げる。
6. テストコピーを行う。
7. ステープル位置が基準値内になるまで、手順 4 ～ 6 を繰り返す。
＜基準値＞ 用紙センターより 78.5mm± 2.5mm

MEMO

303NC5676001

2013. 7
303NC56760-01

INSTALLATION GUIDE FOR 4000-SHEETS FINISHER

INSTALLATION GUIDE

GUIDE D’INSTALLATION

GUÍA DE INSTALACION

INSTALLATIONSANLEITUNG

GUIDA ALL’INSTALLAZIONE

安装手册

설치안내서

設置手順書

DF-790(C)

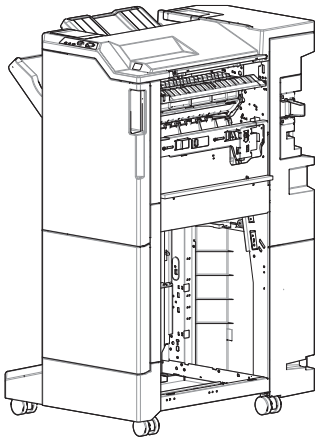

English

A different procedure is required depending on the product which is installed with this unit.Each procedure is described in the following pages.
For installation with a MFP, see Page 1 to Page 7.
For installation with a Printer, see Page 8 to Page 14.
References to medium-speed MFPs in this document denote 30/30, 35/35, 45/45 and 55/50 ppm color machines, and 35, 45 and 55 ppm monochrome machines.
References to high-speed MFPs in this document denote 65/65 and 75/70 ppm color machines, and 65 and 80 ppm monochrome machines.

Français

Une procédure différente est requise selon le produit qui est installé avec cette unité.Chaque procédure est décrite dans les pages suivantes.
Pour l'installation avec une imprimante multifonction, voir Page 1 à Page 7.
Pour l'installation avec une imprimante, voir Page 8 à Page 14.
Dans le présent document, les références aux MFP à vitesse moyenne renvoient aux machines couleurs 30/30, 35/35, 45/45 et 55/50 ppm et aux machines monochromes 35, 45 et 55 ppm.
Dans le présent document, les références aux MFP à grande vitesse renvoient aux machines couleurs 65/65 et 75/70 ppm et aux machines monochromes 65 et 80 ppm.

Español

El procedimiento es diferente según el producto que se instale con esta unidad.En las siguientes páginas, se describe cada procedimiento.
Para la instalación con un MFP, consulte las páginas de la 1 a la 7.
Para la instalación con una impresora, consulte las páginas de la 8 a la 14
.
Las referencias a las MFP de velocidad media de este documento corresponden a las máquinas a color de 30/30, 35/35, 45/45 y 55/50 ppm y a las máquinas monocromáticas de 35, 45 y 55 ppm.
Las referencias a las MFP de alta velocidad de este documento corresponden a las máquinas a color de 65/65 y 75/70 ppm y a las máquinas

Deutsch

Je nach verwendetem Modell ist eine andere Vorgehensweise zur Installation dieses Teils erforderlich.Die unterschiedlichen Vorgehensweisen werden auf den folgenden Seiten erläutert.
Bei Installation an einem Dokumentenfinisher siehe Seiten 1 bis 7.
Bei Installation an einem Drucker siehe Seiten 8 bis 14.
Angaben für MFP der mittleren Leistungsklasse in dieser Anleitung gelten für die 30/30, 35/35, 45/45 und 55/50 ppm Vollfarbenkopierer sowie für die 35, 45 und 55 ppm Monochrommaschinen.
Angaben für MFP der Hochleistungsklasse in dieser Anleitung gelten für die 65/65 und 75/70 ppm Vollfarbenkopierer sowie für die 65 und 80 ppm Monochrommaschinen.

Italiano

Si richiede una procedura diversa in funzione del prodotto su cui è installata l'unità.Le singole procedure sono descritte nelle pagine seguenti.
Per l'installazione con un MFP, vedere le pagine da 1 a 7.
Per l'installazione con una stampante, vedere le pagine da 8 a 14.
I riferimenti per le MFP a velocità media riportati in questo documento indicano le macchine a colori 30/30, 35/35, 45/45 e 55/50 ppm, e le macchine monocromatiche 35, 45 e 55 ppm.
I riferimenti per le MFP a velocità alta riportati in questo documento indicano le macchine a colori 65/65 e 75/70 ppm, e le macchine monocromatiche 65 e 80 ppm.

简体中文

根据安装对象，安装步骤略有不同。各个步骤记载在下面的页面。
安装到 MFP 上时，请参见 P1-P7。
安装到打印机上时，请参见 P8-P14。
本文中的中速 MFP 代表彩色 30/30 页机型、35/35 页机型、45/45 页机型、55/50 页机型、黑白 35 页机型、45 页机型、55 页机型。
本文中的高速 MFP 代表彩色 65/65 页机型、75/70 页机型、黑白 65 页机型、80 页机型。

한국어

이 장치에 설치되는 제품에 따라 절차가 다릅니다 . 다음 페이지에서 각 절차를 설명합니다 .
MFP 에 설치하는 경우 1 페이지 ~7 페이지를 참조하십시오 .
프린터에 설치하는 경우 8 페이지 ~14 페이지를 참조하십시오 .
본문 중 중속 MFP 는 컬러 30/30 매기 , 35/35 매기 , 45/45 매기 , 55/50 매기 , 흑백 35 매기 , 45 매기 , 55 매기를 나타냅니다 .
본문 중 고속 MFP 는 컬러 65/65 매기 , 75/70 매기 , 흑백 65 매기 , 80 매기를 나타냅니다 .

日本語

装着する対象によって、取付手順は異なります。それぞれ、以下のページに記載しています。
MFP に設置する場合;1 ページ～ 7 ページ
プリンターに設置する場合;8 ページ～ 14 ページ
本文中の中速 MFP はカラー機の 30/30 枚機、35/35 枚機、45/45 枚機、55/50 枚機、モノクロ機の 35 枚機、45 枚機、55 枚機を表す。
本文中の高速 MFP はカラー機の 65/65 枚機、75/70 枚機、モノクロ機の 65 枚機、80 枚機を表す。

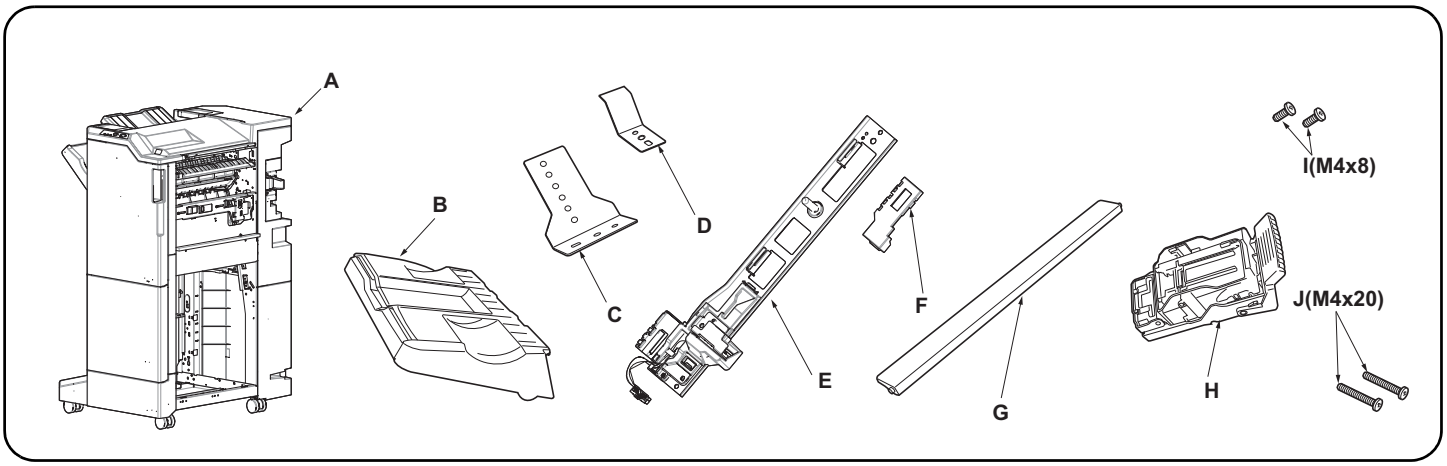

Supplied parts
A. Document finisher 1
B. Eject tray 1
C. Earth connection plate 1
D. Earth spring 1
E. Connecting plate 1
F. Connector cover 1
G. Eject guide 1
H. Staple cartridge 1
I. M4 × 8 screw 2
J. M4 × 20 screw 2

Be sure to remove any tape and/or cushioning materials from the parts supplied.

Pièces fournies
A. Finisseur de document 1
B. Bac d'éjection 1
C. Plaque de raccordement de mise à la terre 1
D. Ressort de mise à la terre 1
E. Plaque de connexion 1
F. Cache de connecteur 1
G. Guide d'éjection 1
H. Cartouche d'agrafes 1
I. Vis M4 × 8 2
J. Vis M4 × 20 2

Veillez à retirer les morceaux de bande adhésive et/ou les matériaux de rembourrage des pièces fournies.

Partes suministradas
A. Finalizador de documentos 1
B. Bandeja de salida 1
C. Placa de conexión a tierra 1
D. Resorte de conexión a tierra 1
E. Placa de conexión 1
F. Cubierta del conector 1
G. Guía de salida 1
H. Cartucho de grapas 1
I. Tornillo M4 × 8 2
J. Tornillo M4 × 20 2

Asegúrese de despegar todas las cintas y/o material amortiguador de las partes suministradas.

Enthaltene Teile
A. Finisher 1
B. Auswerffach 1
C. Grundanschlussplatte 1
D. Grundfeder 1
E. Verbindungsplatte 1
F. Stecker-Abdeckung 1
G. Ausgabeführung 1
H. Heftklammermagazin 1
I. M4 × 8 Schraube 2
J. M4 × 20 Schraube 2

Stellen Sie sicher, dass sämtliche Klebebänder und/oder Polstermaterial von den gelieferten Teilen entfernt wurden.

Parti fornite
A. Finisher documenti 1
B. Vassoio di espulsione 1
C. Piastra di connessione per messa a terra . 1
D. Molla di messa a terra 1
E. Piastra di connessione 1
F. Copri connettore 1
G. Guida di espulsione 1
H. Contenitore punti 1
I. Vite M4 × 8 2
J. Vite M4 × 20 2

Rimuovere tutti i nastri adesivi e/o i materiali di protezione dalle parti fornite.

附属品
A. 装订器 1
B. 排纸托盘 1
C. 接地安装板 1
D. 接地弹簧 1
E. 连接板 1
F. 接插件盖板 1
G. 排纸导向板 1
H. 装订针盒 1
I. M4×8 螺丝 2
J. M4×20 螺丝 2

如果附属品上带有固定胶带，缓冲材料时务必揭下。

동봉품
A. 문서 피니셔 1
B. 배출 트레이 1
C. 접지 부착판 1
D. 접지 스프링 1
E. 연결판 1
F. 커넥터 커버 1
G. 배출 가이드 1
H. 스테이플 카트리지 1
I. 나사 M4×8 2
J. 나사 M4×20 2

동봉품에 고정 테이프 , 완충재가 붙어 있는 경우에는 반드시 제거할 것 .

同梱品
A. ドキュメントフィニッシャー 1
B. 排出トレイ 1
C. アース取付板 1
D. アースバネ 1
E. 連結板 1
F. コネクターカバー 1
G. 排出ガイド 1
H. ステープルカートリッジ 1
I. ビス M4×8 2
J. ビス M4×20 2

同梱品に固定テープ、緩衝材がついている場合は、必ず取り外すこと。

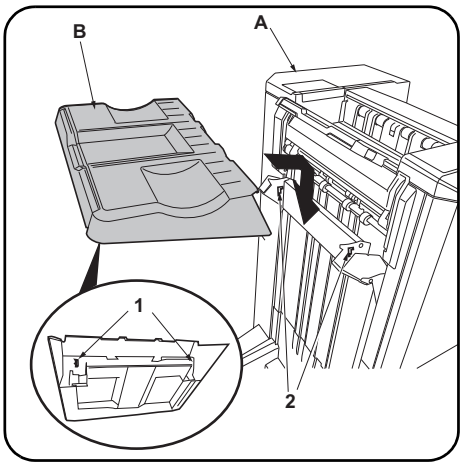

NOTICE
When installing on a medium-speed MFP, the Attachment Kit (AK-730 or AK-731) must be installed before the document finisher is installed.

Procedure
Before starting installation, be sure to turn the main power switch of the machine off, and unplug the power plug from the wall outlet.

1. Install by inserting the 2 hooks (1) on the back of the eject tray (B) into the holes (2) in the document finisher (A) lift.

REMARQUE
Lors de l'installation sur une imprimante multi-fonction à vitesse moyenne, le kit de fixation (AK-730 ou AK-731) doit être installé avant d'installer le finisseur de document.

Procédure
Avant de commencer l'installation, s'assurer de mettre la machine hors tension et de débrancher la fiche d'alimentation de la prise murale.

1. Procéder en insérant les 2 crochets (1) au dos du bac d'éjection (B) dans les trous (2) du dispositif de levage du finisseur de document (A).

AVISO
Si se instala en un MFP de velocidad media, el Kit de conexión (AK-730 o AK-731) se debe instalar antes de instalarse el finalizador de documentos.

Procedimiento
Antes de iniciar la instalación, asegúrese de apagar el interruptor de encendido de la máquina y desenchufar el cable de alimentación de la toma de pared.

1. Instale insertando los 2 ganchos (1) de la parte posterior de la bandeja de salida (B) en los orificios (2) del elevador del finalizador de documentos (A).

ANMERKUNG
Bei der Installation an einem mittelschnellen MFP muss das Attachment-Kit (AK-730 oder AK-731) vor dem Finisher installiert werden.

Verfahren
Bevor Sie mit der Installation beginnen überzeugen Sie sich, dass der Netzschalter des Geräts ausgeschaltet und das Stromkabel aus der Steckdose gezogen ist.

1. Setzen Sie die 2 Haken (1) zur Befestigung an der Rückseite des Auswerffachs (B) in die Öffnungen (2) an der Hebeplatte des Finishers (A) ein.

AVVISO
Quando si installa un MFP di fascia media, prima di installare il finisher documenti occorre installare l'unità Attachment Kit (AK-730 o AK-731).

Procedura
Prima di iniziare l'installazione, spegnere la macchina e scollegare la spina dalla presa di corrente.

1. Installare inserendo i 2 ganci (1) sul retro del vassoio di espulsione (B) nei fori (2) sul sollevatore della finisher documenti (A).

注意
安装到中速 MFP 上时，在安装装订器前，请先安装连接组件（AK-730 或 AK-731）。

安装步骤
安装前务必关闭机器的主电源开关，并从墙壁插座拔下电源插头。

1. 将排纸托盘 (B) 内侧的 2 个挂钩 (1) 装入装订器 (A) 的升降板的孔 (2) 中。

주의
중속 MFP 에 설치하는 경우 문서 피니셔를 장착하기 전에 부착 키트 (AK-730 또는 AK-731) 를 설치해야 합니다 .

장착순서
설치를 시작하기 전에 반드시 본체의 주 전원 스위치를 끄고 벽 콘센트에서 전원 플러그를 분리하십시오 .

1. 배출 트레이 (B) 의 후면 후크 (1) 2 개를 문서 피니셔 (A) 의 승강판 구멍 (2) 에 넣고 장착합니다 .

注意
中速 MFP に設置する場合、ドキュメントフィニッシャーを取り付ける前に、アタッチメントキット(AK-730 または AK-731) の取り付けをおこなうこと。

取付手順
必ず機械本体の主電源スイッチを OFF にし、機械本体の電源プラグを抜いてから作業すること。

1. 排出トレイ (B) の裏側のフック (1)2 個をドキュメントフィニッシャー(A) の昇降板の穴 (2) に入れて、取り付ける。

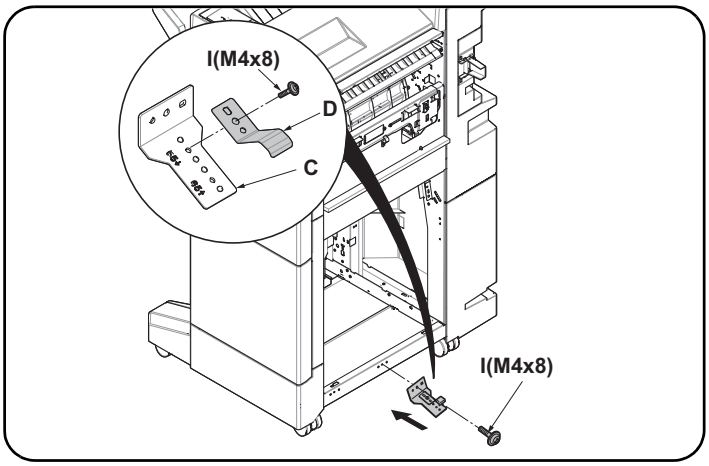

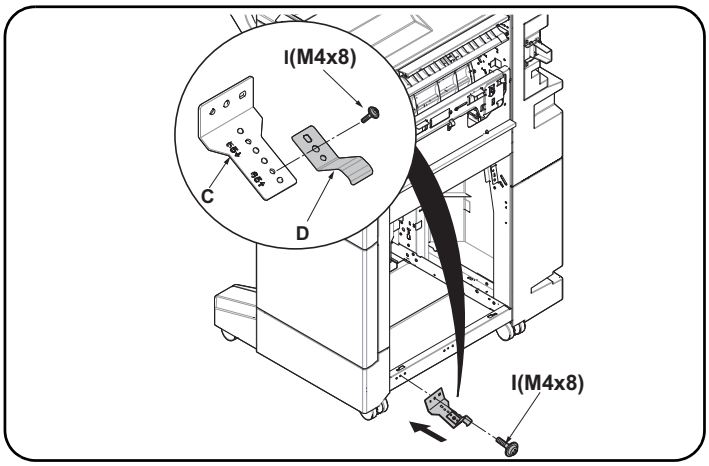

Installation on medium-speed MFPs

2. Using an M4 × 8 screw (I), secure the earth spring (D) in the location indicated by the "55↓" marking on the earth connection plate (C).
3. Attach the earth connection plate (C) to the center of the bottom of the document finisher using an M4 × 8 screw (I).
   Proceed to step 6.The procedure for installing the kit on a high-speed MFP is described on the following steps.

Installation on high-speed MFPs

2. Using an M4 × 8 screw (I), secure the earth spring (D) in the location indicated by the "65↑" marking on the earth connection plate (C).
3. Attach the earth connection plate (C) to the front side of the bottom of the document finisher using an M4 × 8 screw (I).

Montage sur des MFP à vitesse moyenne

2. En procédant à l'aide d'une vis M4 × 8 (I), fixez le ressort de mise à la terre (D) à l'endroit indiqué par la marque "55↓" sur la plaque de raccordement de mise à la terre (C).
3. Fixez la plaque de raccordement de mise à la terre (C) au milieu de la partie inférieure du finisseur de document avec une vis M4 × 8 (I).
   Passer à l'étape 6. La procédure d'installation du kit sur l'imprimante multifonction à grande vitesse est décrite dans les étapes suivantes.

Montage sur des MFP à grande vitesse

2. En procédant à l'aide d'une vis M4 × 8 (I), fixez le ressort de mise à la terre (D) à l'endroit indiqué par la marque "65↑" sur la plaque de raccordement de mise à la terre (C).
3. Fixez la plaque de raccordement de mise à la terre (C) à l'avant de la partie inférieure du finisseur de document avec une vis M4 × 8 (I).

Instalación en las MFP de velocidad media

2. Con un tornillo M4 × 8 (I), asegure el resorte de conexión a tierra (D) en el lugar indicado por la marca "55↓" de la placa de conexión a tierra (C).
3. Fije la placa de conexión a tierra (C) en el centro de la parte inferior del finalizador de documentos usando un tornillo M4 × 8 (I).
   Vaya al paso 6.En los siguientes pasos se describe el procedimiento de instalación del kit en un MFP de velocidad alta.

Instalación en las MFP de alta velocidad

2. Con un tornillo M4 × 8 (I), asegure el resorte de conexión a tierra (D) en el lugar indicado por la marca "65↑" de la placa de conexión a tierra (C).
3. Fije la placa de conexión a tierra (C) en el lado frontal de la parte inferior del finalizador de documentos usando un tornillo M4 × 8 (I).

Installation an MFP der mittleren Leistungsklasse

2. Befestigen Sie die Grundfeder (D) mit einer M4 × 8 Schraube (I) an der mit "55↓" bezeichneten Stelle der Grundanschlussplatte (C).
3. Bringen Sie die Grundanschlussplatte (C) mit einer M4 × 8 Schraube (I) mittig an der Unterseite des Finishers an.
   Gehen Sie weiter zu Schritt 6.Die Vorgehensweise zur Installation des Kits an einem schnellen MFP wird in den folgenden Schritten beschrieben.

Installation an MFP der Hochleistungsklasse

2. Befestigen Sie die Grundfeder (D) mit einer M4 × 8 Schraube (I) an der mit "65↑" bezeichneten Stelle der Grundanschlussplatte (C).
3. Bringen Sie die Grundanschlussplatte (C) mit einer M4 × 8 Schraube (I) vorne an der Unterseite des Finishers an.

Installazione sulle MFP a velocità media

2. Utilizzando una vite M4 × 8 (I), fissare la molla di messa a terra (D) nella posizione indicata dal segno "55↓" sulla piastra di connessione per messa a terra (C).
3. Applicare la piastra di connessione per messa a terra (C) al centro in basso della finisher documenti utilizzando una vite M4 × 8 (I).
   Procedere al passo 6. La procedura di installazione del Kit su un MFP di fascia alta è descritta nelle pagine successive.

Installazione sulle MFP a velocità alta

2. Utilizzando una vite M4 × 8 (I), fissare la molla di messa a terra (D) nella posizione indicata dal segno "65↑" sulla piastra di connessione per messa a terra (C).
3. Applicare la piastra di connessione per messa a terra (C) al lato anteriore in basso della finisher documenti utilizzando una vite M4 × 8 (I).

安装于中速 MFP 上时

2. 在接地安装板 (C) 上刻有 55 ↓的位置使用 1 颗 M4×8(I) 螺丝来固定接地弹簧 (D)。
3. 使用 M4×8(I) 螺丝将接地安装板 (C) 安装到装订器下部中心位置。
   进至步骤 6。安装到高速 MFP 时，请参照下面的内容。

安装于高速 MFP 上时

2. 在接地安装板 (C) 上刻有 65 ↑的位置使用 1 颗 M4×8(I) 螺丝来固定接地弹簧 (D)。
3. 使用 M4×8(I) 螺丝将接地安装板 (C) 安装到装订器下部前侧位置。

중속 MFP 에 설치하는 경우

2. 접지 부착판 (C) 의 각인 55 ↓의 위치에 나사 M4×8(I) 1 개로 접지스프링 (D) 을 고정합니다 .
3. 나사 M4×8(I) 로 접지 부착판 (C) 을 문서 피니셔 하부중앙에 부착합니다 .
   순서 6 로 진행합니다 .고속 MFP 에 키트를 설치하는 절차는 다음 단계에 설명되어 있습니다 .

고속 MFP 에 설치하는 경우

2. 접지 부착판 (C) 의 각인 65 ↑의 위치에 나사 M4×8(I) 1 개로 접지스프링 (D) 을 고정합니다 .
3. 나사 M4×8(I) 로 접지 부착판 (C) 을 문서 피니셔 하부앞측에 부착합니다 .

中速 MFP に設置の場合

2. アース取付板 (C) の刻印 55 ↓の位置にビス M4×8(I) でアースバネ (D) を固定する。
3. ビス M4×8(I) でアース取付板 (C) をドキュメントフィニッシャー下部センターに取り付ける。
   手順 6 に進む。高速 MFP に設置の場合は次に記載しています。

高速 MFP に設置の場合

2. アース取付板 (C) の刻印 65 ↑の位置にビス M4×8(I) でアースバネ (D) を固定する。
3. ビス M4×8(I) でアース取付板 (C) をドキュメントフィニッシャー下部前側に取り付ける。

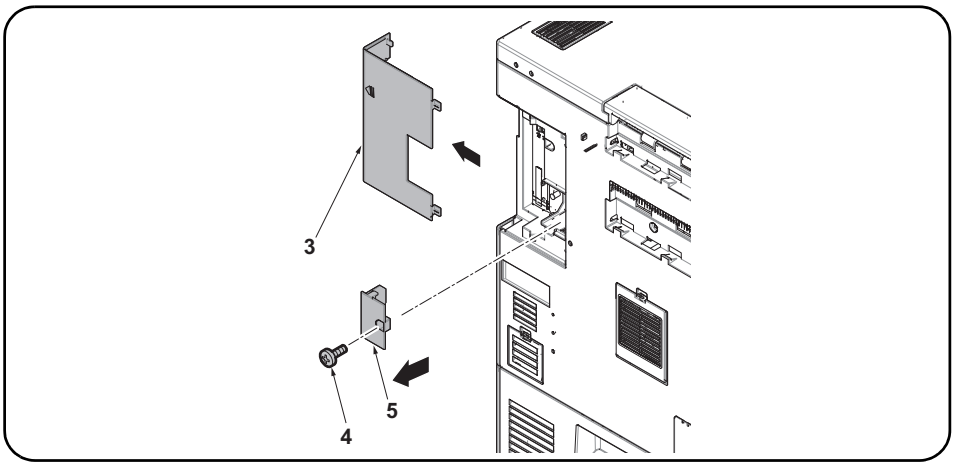

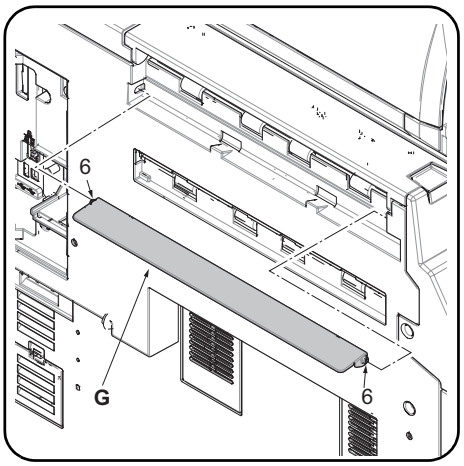

Only for installation on high-speed MFPs
If installing on a medium-speed MFP, proceed to step 6.
4. Remove the machine interface cover (3).
5. Remove the screw (4) and remove the controller cover (5).

6. Install the eject guide (G) by fitting the 2 eject guide pins (6) into the holes in the machine.

Pour montage sur des MFP à grande vitesse uniquement
Si le montage est fait sur un MFP à vitesse moyenne, passer à l'étape 6.
4. Déposer le couvercle d'interface (3) de la machine.
5. Déposer la vis (4) puis le couvercle du contrôleur (5).

6. Installer le guide d'éjection (G) en insérant les 2 ergots du guide d'éjection (6) dans les trous de la machine.

Solo para la instalación en las MFP de alta velocidad
Si se instala en una MFP de velocidad media, vaya al paso 6.
4. Quite la cubierta de la interfaz (3) de la máquina.
5. Quite el tornillo (4) y quite la cubierta del controlador (5).

6. Instale la guía de salida (G) encajando los 2 pasadores de la guía de salida (6) en los orificios de la máquina.

Nur bei Installation an MFP der Hochleistungsklasse
Gehen Sie zur Installation an einem MFP der mittleren Leistungsklasse weiter zu Schritt 6.
4. Nehmen Sie die Schnittstellenabdeckung (3) des Geräts ab.
5. Entfernen Sie die Schraube (4) und nehmen Sie die Controller-Abdeckung (5) ab.

6. Installieren Sie die Ausgabeführung (G), indem Sie die beiden Stifte (6) der Auswerfführung in die Aufnahmen des Geräts einsetzen.

Solo per l'installazione sulle MFP a velocità alta
Se si installa su una MFP a velocità media, procedere al passo 6.
4. Rimuovere la copertura di interfaccia (3) della macchina.
5. Rimuovere la vite (4) e quindi rimuovere il coperchio del controller (5).

6. Installare la guida di espulsione (G) inserendo i 2 perni (6) della guida di espulsione nei fori della macchina.

仅限安装于高速 MFP 上时
安装于中速 MFP 上时，进至步骤 6。
4. 拆下机器的接口盖板 (3)。
5. 拆除 1 颗螺丝 (4)，拆下控制器盖板 (5)。

6. 将排纸导向板 (G) 的 2 根销钉 (6) 插入机器的孔中。

고속 MFP 에 설치하는 경우만
중속 MFP 에 설치하는 경우에는 순서 6 로 진행합니다 .
4. 본체의 인터페이스 커버 (3) 를 제거합니다 .
5. 나사 (4) 1 개를 빼고 컨트롤러덮개 (5) 를 제거합니다 .

6. 배출 가이드 (G) 핀 (6) 2 개를 본체의 구멍에 맞추어 끼워서 부착합니다 .

高速 MFP に設置の場合のみ
中速 MFP に設置の場合は手順 6 に進む。
4. 機械本体のインターフェイスカバー (3) を取り外す。
5. ビス (4) を外し、コントローラーフタ (5) を取り外す。

6. 排出ガイド (G) のピン (6) 2 本を機械本体の穴に差し込み取り付ける。

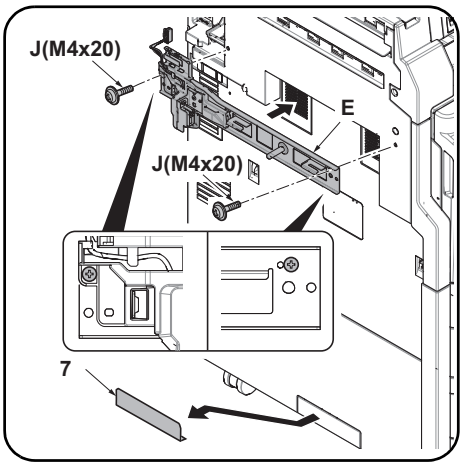

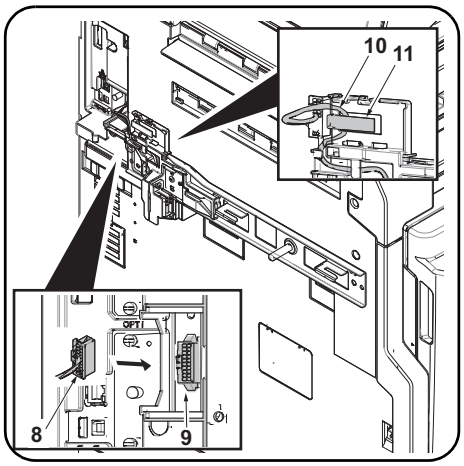

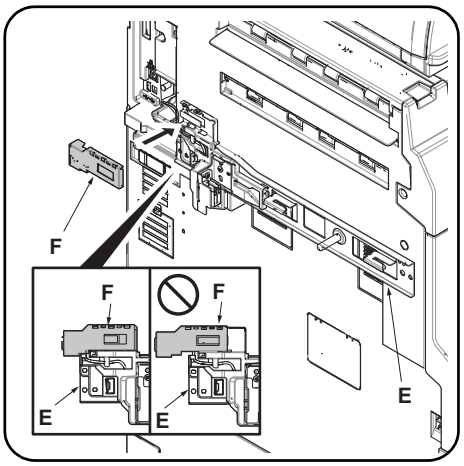

7. Attach the connecting plate (E) to the machine using 2 M4 × 20 screws (J). Attach them at the point as shown above.

Only if installing to a medium-speed MFP

If installing on a high-speed MFP, proceed to step 9.

8. Remove the breakaway cover (7) from the left cover.

9. Connect the signal line connector (8) to the connector (9) on the machine. Hook the signal line wire (10) onto the hook (11).

10. Fit the connector cover (F) in the connecting plate (E). Take care not to get the cable pinched by objects. Attach it at the point as shown above. Check that the signal line connector is covered by the connector cover (F).

---

7. Fixez la plaque de connexion (E) à la machine à l'aide de 2 vis M4 × 20 (J).Raccordez-les au point indiqué ci-dessus.

Uniquement en cas d'installation sur un MFP à vitesse moyenne

Si le montage est fait sur un MFP à grande vitesse, passer à l'étape 9.

8. Déposer le couvercle amovible (7) du couvercle gauche.

9. Raccorder le connecteur de ligne de signal (8) sur le connecteur (9) de la machine. Accrocher le fil de ligne de signal (10) sur le crochet (11).

10. Placer le cache de connecteur (F) dans la plaque de connexion (E).Prendre soin à ne pas pincer le câble. Raccordez-les au point indiqué ci-dessus. Vérifier que le connecteur de ligne de signal est couvert par le cache de connecteur (F).

---

7. Fije la placa de conexión (E) a la máquina mediante 2 tornillos M4 × 20 (J).Conéctelas en el punto que se muestra arriba.

Solo si instala en una MFP de velocidad media

Si se instala en una MFP de alta velocidad, vaya al paso 9.

8. Quite la cubierta divisoria (7) de la cubierta izquierda.

9. Conecte el conector de línea de señales (8) al conector (9) de la máquina. Enganche el cable de la línea de señales (10) en el enganche (11).

10. Acople la cubierta del conector (F) en la placa de conexión (E).Tenga cuidado de que el cable no quede atrapado por objetos. Conéctelas en el punto que se muestra arriba. Compruebe que el conector de la línea de señales quede cubierto por la cubierta del conector (F).

---

7. Bringen Sie die Verbindungsplatte (E) mit 2 M4 × 20 Schrauben (J) am Gerät an.Bringen Sie diese an der in der Abbildung gezeigten Stelle an.

Nur bei Installation eines MFP der mittleren Leistungsklasse

Gehen Sie zur Installation an einem MFP der Hochleistungsklasse weiter zu Schritt 9.

8. Nehmen Sie die Ablösungsabdeckung (7) von der linken Abdeckung ab.

9. Verbinden Sie den Stecker der Signalleitung (8) mit dem Steckverbinder im Gerät (9). Hängen Sie das Kabel der Signalleitung (10) in den Befestigungshaken (11) ein.

10. Setzen Sie die Stecker-Abdeckung (F) in die Verbindungsplatte (E) ein. Stellen Sie sicher, dass das Kabel nicht eingeklemmt wird. Bringen Sie diese an der in der Abbildung gezeigten Stelle an. Überprüfen Sie, ob der Stecker der Signalleitung von der Stecker-Abdeckung (F) abgedeckt ist.

---

7. Applicare la piastra di connessione (E) alla macchina utilizzando le 2 viti M4 × 20 (J).Fissare nella posizione sopra indicata.

Solo se si installa ad un'MFP a velocità media

Se si installa su una MFP a velocità alta, procedere al passo 9.

8. Rimuovere il coperchio di distacco (7) dal coperchio sinistro.

9. Collegare il connettore di linea del segnale (8) al connettore (9) sulla periferica. Agganciare il cavo di linea del segnale (10) al gancio (11).

10. Inserire il copri connettore (F) nella piastra di connessione (E).Fare attenzione a non impigliare il cavo.Fissare nella posizione sopra indicata.Controllare che il connettore della linea del segnale sia coperto dal copri connettore (F).

---

7. 使用 2 颗 M4×20(J) 螺丝将连接板 (E) 安装到机器上。按图示位置来安装。

仅限安装于中速机上时

安装于高速 MFP 上时，进至步骤 9。

8. 去除左侧盖板上的可去除部（7）。

9. 把信号线的接插件（8）和机器本体的接插件（9）相连接。 把信号线（10）挂到挂钩（11）上。

10. 将接插件盖板 (F) 嵌入到连接板 (E)。请注意不要夹住电线。按图示位置来安装。请确认信号线的接插件是否完全隐藏在接插件盖板中 (F)。

---

7. 나사 M4 × 20(J) 2 개를 사용하여 연결판 (E) 을 본체에 부착합니다 . 위에 표시된 위치에 부착합니다 . 위에 표시된 위치에 부착합니다 .

중속 MFP 에 설치할 경우만

고속 MFP 에 설치하는 경우에는 순서 9 로 진행합니다 .

8. 좌측커버의 분할커버부 (7) 를 떼어 냅니다 .

9. 신호선 커넥터 (8) 를 본체의 커넥터 (9) 에 연결합니다 . 신호선 와이어 (10) 를 후크 (11) 에 겁니다 .

10. 커넥터 커버 (F) 를 연결판 (E) 에 맞추어 끼웁니다 . 전선이 커넥터 커버 (F) 에 끼이지 않도록 주의합니다 . 위에 표시된 위치에 부착합니다 . 신호선 커넥터가 커넥터 커버 (F) 에 덮여있는지 확인합니다 .

---

7. 連結板 (E) をビス M4×20(J)2 本で、機械本体に取り付ける。図の位置で取り付けること。

中速 MFP に設置の場合のみ

高速 MFP に設置の場合は手順 9 に進む。

8. 左カバーの割りカバー部 (7) を切り取る。

9. 信号線のコネクター(8) を機械本体のコネクター(9) に接続する。信号線 (10) は、フック (11) に掛けること。

10. コネクターカバー(F) を連結板 (E) にはめ込む。電線を挟み込まない様注意すること。図の位置で取り付けること。信号線のコネクターがコネクターカバー(F) で隠れていることを確認する。

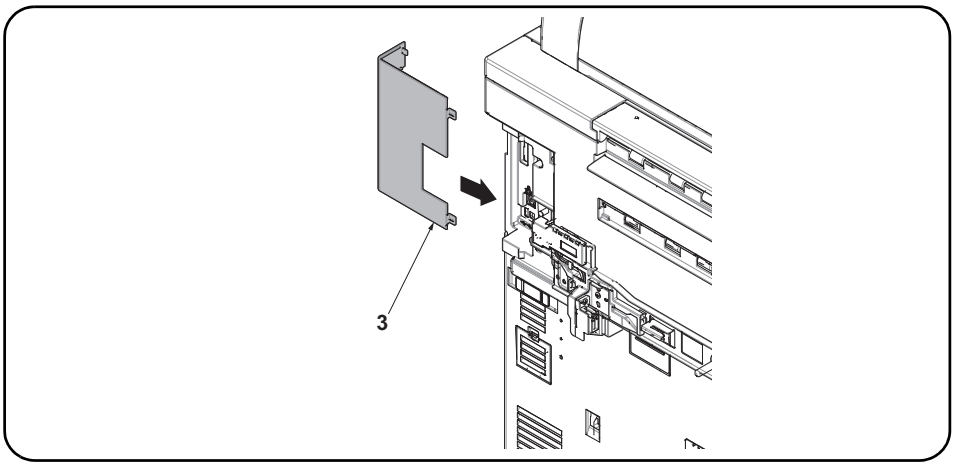

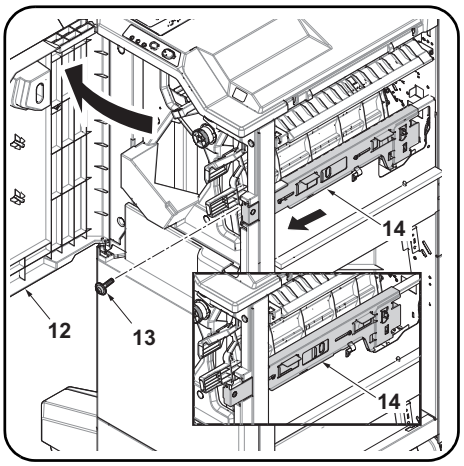

11. Attach the interface cover (3)* on the machine.
* Installing with a high-speed MFP : the cover which was removed in step 4.
Installing with a medium-speed MFP : the cover which was removed while installing the AK-730 or AK-731.

12. Open the document finisher upper front cover (12). Remove the screw (13). Pull the lock frame (14) frontwards.

---

11. Raccordez le couvercle d'interface (3)* à la machine.
* Installation avec une imprimante multifonction à grande vitesse : le cache qui a été retiré à l'étape 4.
Installation avec une imprimante multifonction à moyenne vitesse : le cache qui a été retiré lors de l'installation de l'AK-730 ou AK-731.

12. Ouvrir le couvercle avant supérieur du finisseur de document (12). Retirez la vis (13). Tirer le cadre de verrouillage (14) vers le bas.

---

11. Conecte la cubierta de interfaz (3)* de la máquina.
* Instalación con un MFP de velocidad alta : la cubierta que se quitó en el paso 4.
Instalación con un MFP de velocidad media : la cubierta que se quitó al instalar el kit AK-730 o AK-731.

12. Abra la cubierta frontal superior del finalizador de documentos (12). Quite el tornillo (13). Empuje el marco de cierre (14) hacia delante.

---

11. Bringen Sie die Schnittstellenabdeckung (3)* am Gerät an.
*Installation an einem MFP der Hochleistungsklasse : die Abdeckung, die in Schritt 4 entfernt wurde
Installation an einem MFP der mittleren Leistungsklasse : die Abdeckung, die zur Installation des AK-730 oder AK-731 entfernt wurde

12. Öffnen Sie die obere vordere Abdeckung des Finishers (12). Entfernen Sie die Schraube (13). Ziehen Sie die Verriegelung (14) nach vorne.

---

11. Fissare la copertura di interfaccia (3)* sulla macchina.
* Installazione su un MFP di fascia alta : il coperchio che è stato rimosso al punto 4
Installazione su un MFP di fascia media : il coperchio che è stato rimosso per installare il kit AK-730 o AK-731

12. Aprire il coperchio frontale superiore del finisher documenti (12). Togliere la vite (13). Tirare in avanti la frame di blocco (14).

---

11. 将接口盖板 (3)＊安装到机器主机。
＊安装到高速 MFP 时 ： 在步骤 4 中取下的盖板
安装到中速 MFP 时 ： 在安装 AK-730 或 AK-731 时取下的盖板

12. 打开装订器的前上盖板（12）。取下螺丝（13）。 向身体前侧拉出固定架（14）。

---

11. 인터페이스 커버 (3)* 를 본체에 부착합니다 .
* 고속 MFP 설치의 경우 : 순서 4 에서 제거한 커버
중속 MFP 설치의 경우 : AK-730 또는 AK-731 설치 시 분리한 커버

12. 문서 피니셔의 전면 상커버 (12) 를 엽니다 . 나사 (13) 를 제거합니다 . 잠금 프레임 (14) 을 앞으로 뺍니다 .

---

11. 機械本体にインターフェイスカバー(3)＊を取り付ける。
＊高速 MFP に設置の場合：手順 4 で外したカバー
中速 MFP に設置の場合： AK-730 または AK-731 設置時に取り外したカバー

12. ドキュメントフィニッシャーの前上カバー (12) を開く。ビス (13) を外す。ロックフレーム (14) を手前に引く。

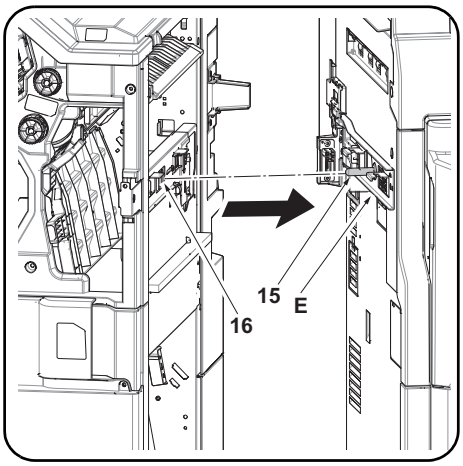

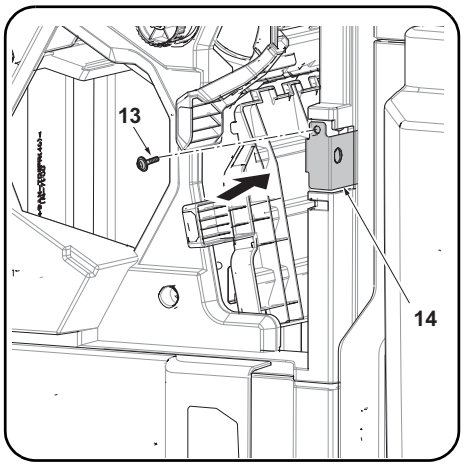

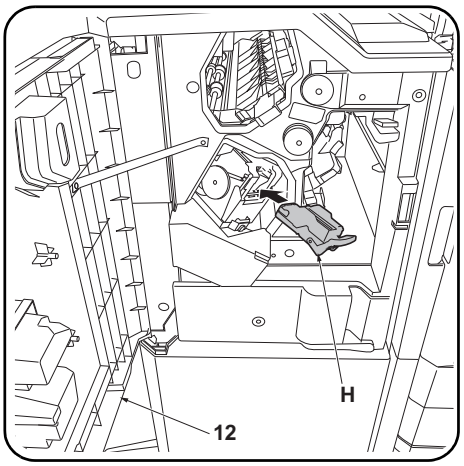

13. Insert the pin (15) on the connecting plate (E) into the hole (16) on the document finisher. Connect the document finisher to the machine.
* If you cannot connect the document finisher, adjust the height as described on page 15.

14. Slowly push the lock frame (14) fully into the machine so that the connectors at the far end are connected.
15. Secure the lock frame (14) using the screw (13) removed in step 12.

16. Install the staple cartridge (H).
17. Close the upper front cover (12).

Proceed to adjusting the stapling position on page 20.

---

13. Introduire la broche (15) sur la plaque de connexion (E) dans le trou (16) sur le finisseur de document. Connecter le finisseur de document sur la machine.
* S'il s'avère impossible de connecter le finisseur de document, en régler la hauteur comme décrit en page 15.

14. Pousser doucement le cadre de verrouillage (14) à fond dans la machine de sorte que les connecteurs à l'extrémité soient raccordés.
15. Fixez le bâti de verrouillage (14) à l'aide de la vis (13) déposée à l'étape 12.

16. Installer la cartouche d'agrafes (H).
17. Refermer le couvercle avant supérieur (12).

Passez à l'ajustement de la position d'agrafage page 20.

---

13. Inserte el pasador (15) de la placa de conexión (E) en el orificio (16) del finalizador de documentos. Conecte el finalizador de documentos a la máquina.
* Si no puede conectar el finalizador de documentos, ajuste la altura como se describe en la página 15.

14. Empuje lentamente y hasta el fondo el marco del cierre (14) hacia la máquina de modo que se conecten los conectores en el extremo más lejano.
15. Asegure la carcasa de bloqueo (14) por medio del tornillo (13) quitado en el paso 12.

16. Instale el cartucho de grapas (H).
17. Cierre la cubierta frontal superior (12).

Proceda al ajuste de la posición de grapado en la página 20.

---

13. Setzen Sie den Stift (15) der Verbindungsplatte (E) in die Öffnung (16) des Finishers. Verbinden Sie den Finisher mit dem Gerät.
* Falls Sie den Finisher nicht anschließen können, sollten Sie die Höhe wie auf Seite 15 beschrieben einstellen.

14. Schieben Sie die Verriegelung (14) wieder langsam ins Gerät, so dass die Verbindungen am anderen Ende des Geräts geschlossen werden.
15. Befestigen Sie den Fixierrahmen (14) mit der in Schritt 12 entfernten Schraube (13).

16. Installieren Sie das Heftklammer-Magazin (H).
17. Schließen Sie die obere vordere Abdeckung (12).

Fahren Sie mit der Justage der Heftposition auf Seite 20 fort.

---

13. Inserire il perno (15) della piastra di connessione (E) nel foro (16) del finisher documenti. Collegare il finisher documenti alla macchina.
* Se non è possibile collegare la finisher documenti, regolare l'altezza come descritto a pagina 15.

14. Spingere lentamente la frame di blocco (14) nella macchina in modo che i connettori all'estremità risultino collegati.
15. Fissare il telaio di bloccaggio (14) utilizzando la vite (13) rimossa nel passo 12.

16. Installare il contenitore punti (H).
17. Chiudere il coperchio superiore anteriore (12).

Proseguire con la regolazione della posizione di pinzatura a pagina 20.

---

13. 将连接板 (E) 的销钉 (15) 插入装订器的孔 (16) 中。 把装订器连接到机器本体。
※ 如果无法连接，请进行 P15 的 “ 高度调节 ”。

14. 慢慢的把固定架 (14) 完全推入机器，这样机器里侧的接插件就可以顺利连接。
15. 使用在步骤 12 中取下的 1 颗螺丝 (13) 来固定锁框 (14)。

16. 安装装订针盒 (H)。
17. 关闭前部上盖板 (12)。

跳至 P20「调节装订位置」。

---

13. 연결판 (E) 의 핀 (15) 을 문서 피니셔의 구멍 (16) 에 삽입합니다 . 문서 피니셔를 본체에 연결합니다 .
※ 연결할 수 없는 경우에는 P15 의 「높이조정」을 할 것 .

14. 본체 뒷쪽의 커넥터가 연결되도록 잠금 프레임 (14) 을 본체 안으로 천천히 밀어 넣습니다 .
15. 순서 12 에서 뺀 나사 (13) 1 개로 잠금 프레임 (14) 을 고정합니다 .

16. 스테이플 카트리지 (H) 를 설치합니다 .
17. 앞 상커버 (12) 를 닫습니다 .

20 페이지의 스테이플 위치 조정으로 진행합니다 .

---

13. 連結板 (E) のピン (15) をドキュメントフィニッシャーの穴 (16) に挿入する。ドキュメントフィニッシャーを機械本体に接続する。
※ 連結できない場合は、P15 の「高さ調整」を行う。

14. 機械奥側のコネクタが接続されるように、ロックフレーム (14) をゆっくり奥に押す。
15. 手順 12 で外したビス (13) で、ロックフレーム (14) を固定する。

16. ステープルカートリッジ (H) を取り付ける。
17. 前上カバー (12) を閉じる。

P20「ステープル位置の調整」に進む。

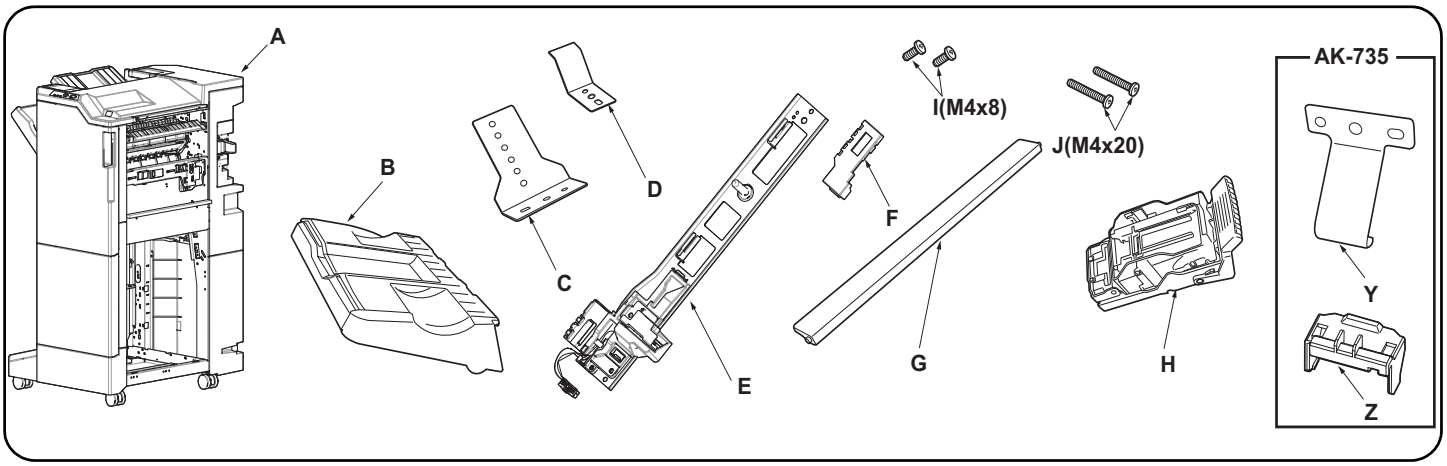

Supplied parts

A. Document finisher 1
B. Eject tray 1
C. Earth connection plate 1
D. Earth spring 1
E. Connecting plate 1
F. Connector cover 1
G. Eject guide 1
H. Staple cartridge 1
I. M4 × 8 screw 3
J. M4 × 20 screw 2
K. Earth Plate 1
L. Cover 1

C ,D and Z are not used.

Be sure to remove any tape and/or cushioning materials from the parts supplied.

Pièces fournies

A. Finisseur de document 1
B. Bac d'éjection 1
C. Plaque de raccordement de mise à la terre 1
D. Ressort de mise à la terre 1
E. Plaque de connexion 1
F. Cache de connecteur 1
G. Guide d'éjection 1
H. Cartouche d'agrafes 1
I. Vis M4 × 8 2
J. Vis M4 × 20 2
Y. Plaque de terre 1
Z. Couvercle 1

C, D et Z ne sont pas utilisés.

Veillez à retirer les morceaux de bande adhésive et/ou les matériaux de rembourrage des pièces fournies.

Partes suministradas

A. Finalizador de documentos 1
B. Bandeja de salida 1
C. Placa de conexión a tierra 1
D. Resorte de conexión a tierra 1
E. Placa de conexión 1
F. Cubierta del conector 1
G. Guía de salida 1
H. Cartucho de grapas 1
I. Tornillo M4 × 8 2
J. Tornillo M4 × 20 2
Y. Placa de conexión a tierra 1
Z. Cubierta 1

C, D y Z no se utilizan.

Asegúrese de despegar todas las cintas y/o material amortiguador de las partes suministradas.

Enthaltene Teile

A. Finisher 1
B. Auswerffach 1
C. Grundanschlussplatte 1
D. Grundfeder 1
E. Verbindungsplatte 1
F. Stecker-Abdeckung 1
G. Ausgabeführung 1
H. Heftklammermagazin 1
I. M4 × 8 Schraube 2
J. M4 × 20 Schraube 2
Y. Grundplatte 1
Z. Abdeckung 1

C, D und Z werden nicht benötigt.

Stellen Sie sicher, dass sämtliche Klebebänder und/oder Polstermaterial von den gelieferten Teilen entfernt wurden.

Parti fornite

A. Finisher documenti 1
B. Vassoio di espulsione 1
C. Piastra di connessione per messa a terra . 1
D. Molla di messa a terra 1
E. Piastra di connessione 1
F. Copri connettore 1
G. Guida di espulsione 1
H. Contenitore punti 1
I. Vite M4 × 8 2
J. Vite M4 × 20 2
Y. Piastra di messa a terra 1
Z. Coperchio 1

C, D e Z non sono utilizzati.

Rimuovere tutti i nastri adesivi e/o i materiali di protezione dalle parti fornite.

附属品

A. 装订器 1
B. 排纸托盘 1
C. 接地安装板 1
D. 接地弹簧 1
E. 连接板 1
F. 接插件盖板 1
G. 排纸导向板 1
H. 装订针盒 1
I. M4×8 螺丝 2
J. M4×20 螺丝 2
Y. 接地板 1
Z. 盖板 1

不使用 C、D 和 Z。

如果附属品上带有固定胶带，缓冲材料时务必揭下。

동봉품

A. 문서 피니셔 1
B. 배출 트레이 1
C. 접지 부착판 1
D. 접지 스프링 1
E. 연결판 1
F. 커넥터 커버 1
G. 배출 가이드 1
H. 스테이플 카트리지 1
I. 나사 M4×8 2
J. 나사 M4×20 2
Y. 접지판 1
Z. 커버 1

C, D 와 Z 는 사용되지 않습니다 .

동봉품에 고정 테이프 , 완충재가 붙어 있는 경우에는 반드시 제거할 것 .

同梱品

A. ドキュメントフィニッシャー 1
B. 排出トレイ 1
C. アース取付板 1
D. アースバネ 1
E. 連結板 1
F. コネクターカバー 1
G. 排出ガイド 1
H. ステープルカートリッジ 1
I. ビス M4×8 2
J. ビス M4×20 2
Y. アース板 1
Z. カバー 1

C,D,Z は使用しない。

同梱品に固定テープ、緩衝材がついている場合は、必ず取り外すこと。

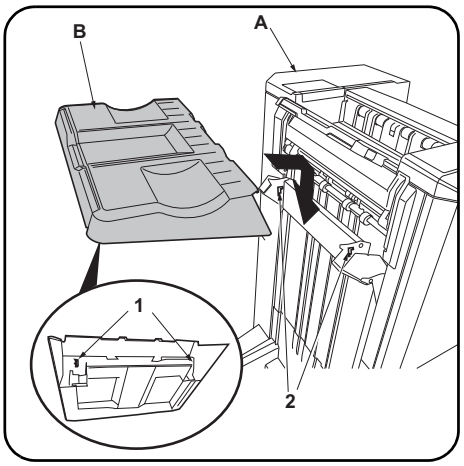

NOTICE
The Attachment Kit (AK-735) must be installed before the document finisher is installed.

Procedure
Before starting installation, be sure to turn the main power switch of the machine off, and unplug the power plug from the wall outlet.

1. Install by inserting the 2 hooks (1) on the back of the eject tray (B) into the holes (2) in the document finisher (A) lift.

REMARQUE
Le gabarit de fixation (AK-735) doit être en place avant de procéder à l'installation du finisseur de document.

Procédure
Avant de commencer l'installation, s'assurer de mettre la machine hors tension et de débrancher la fiche d'alimentation de la prise murale.

1. Procéder en insérant les 2 crochets (1) au dos du bac d'éjection (B) dans les trous (2) du dispositif de levage du finisseur document (A).

AVISO
El Kit de instalación (AK-735) debe instalarse antes de instalar el finalizador de documentos.

Procedimiento
Antes de iniciar la instalación, asegúrese de apagar el interruptor de encendido de la máquina y desenchufar el cable de alimentación de la toma de pared.

1. Instale insertando los 2 ganchos (1) de la parte posterior de la bandeja de salida (B) en los orificios (2) del elevador del finalizador de documentos (A).

ANMERKUNG
Das Gerätezusatz (AK-735) muss installiert werden, bevor man den Finisher installiert.

Verfahren
Bevor Sie mit der Installation beginnen überzeugen Sie sich, dass der Netzschalter des Geräts ausgeschaltet und das Stromkabel aus der Steckdose gezogen ist.

1. Setzen Sie die 2 Haken (1) zur Befestigung an der Rückseite des Auswerffachs (B) in die Öffnungen (2) an der Hebeplatte des Finishers (A) ein.

AVVISO
Il kit accessorio (AK-735) deve essere installato prima che sia installata la finisher documenti.

Procedura
Prima di iniziare l'installazione, spegnere la macchina e scollegare la spina dalla presa di corrente.

1. Installare inserendo i 2 ganci (1) sul retro del vassoio di espulsione (B) nei fori (2) sul sollevatore della finisher documenti (A).

注意
安装装订器之前，必须先安装连接组件（AK-735）。

安装步骤
安装前务必关闭机器的主电源开关，并从墙壁插座拔下电源插头。

1. 将排纸托盘 (B) 内侧的 2 个挂钩 (1) 装入装订器 (A) 的升降板的孔 (2) 中。

주의
문서 피니셔를 장착하기 전에 연결킷 (AK-735) 의 장착을 선행할 것 .

장착순서
설치를 시작하기 전에 반드시 본체의 주 전원 스위치를 끄고 벽 콘센트에서 전원 플러그를 분리하십시오 .

1. 배출 트레이 (B) 의 후면 후크 (1) 2 개를 문서 피니셔 (A) 의 승강판 구멍 (2) 에 넣고 장착합니다 .

注意
ドキュメントフィニッシャーを取り付ける前に、アタッチメントキット(AK-735) の取り付けをおこなうこと。

取付手順
必ず機械本体の主電源スイッチを OFF にし、機械本体の電源プラグを抜いてから作業すること。

1. 排出トレイ (B) の裏側のフック (1)2 個をドキュメントフィニッシャー(A) の昇降板の穴 (2) に入れて、取り付ける。

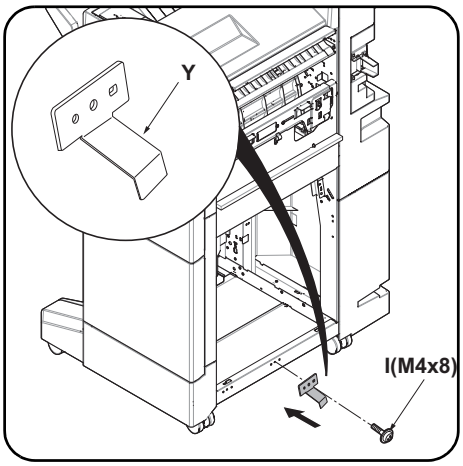

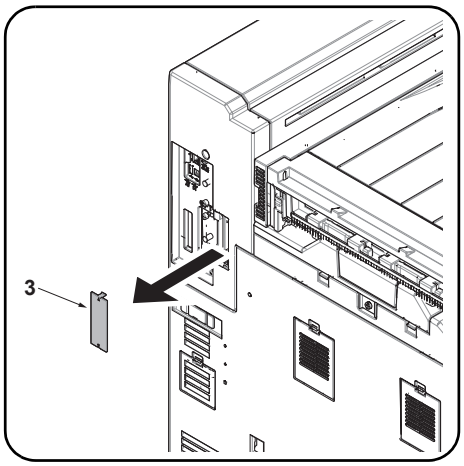

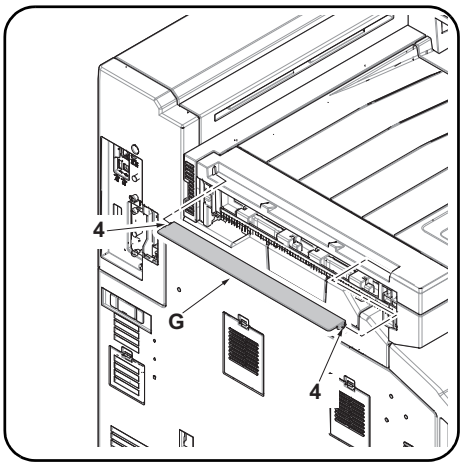

2. Attach the earth plate (Y)* to the center of the bottom of the document finisher using an M4 × 8 screw (I).
*The part was supplied with AK-735

3. Remove the cover (3) from the machine.

4. Install the eject guide (G) by fitting the 2 eject guide pins (4) into the holes in the machine.

---

2. Raccordez la plaque de terre (Y)* en bas au centre du finisseur de document en utilisant une vis M4 × 8 (I).
*La pièce a été fournie avec l'AK-735

3. Retirer le couvercle (3) de la machine.

4. Installer le guide d'éjection (G) en insérant les 2 ergots du guide d'éjection (4) dans les trous de la machine.

---

2. Conecte la placa de conexión a tierra (Y)* al centro de la parte inferior del finalizador de documentos con un tornillo M4 × 8 (I).
*La pieza se proporcionó con AK-735

3. Quite la cubierta (3) de la máquina.

4. Instale la guía de salida (G) encajando los 2 pasadores de la guía de salida (4) en los orificios de la máquina.

---

2. Bringen Sie die Grundplatte (Y)* in der Mitte des Bodens des Finishers mit den M4 x 8 Schrauben (I) an.
*Dieses Teil ist im AK-735 enthalten.

3. Entfernen Sie die Abdeckung (3) vom Gerät.

4. Installieren Sie die Ausgabeführung (G), indem Sie die beiden Stifte (4) der Auswerfführung in die Aufnahmen des Geräts einsetzen.

---

2. Applicare la piastra di messa a terra (Y)* al centro dell'area inferiore della finisher documenti utilizzando una vite M4 × 8 (I).
*Parte fornita con AK-735

3. Rimuovere il coperchio (3) dalla macchina.

4. Installare la guida di espulsione (G) inserendo i 2 perni (4) della guida di espulsione nei fori della macchina.

---

2. 使用 M4×8(I) 螺丝将接地板 (Y)* 安装到装订器下部中央。
*AK-735 的附属品

3. 从机器上拆下盖板（3）。

4. 将排纸导向板 (G) 的 2 根销钉 (4) 插入机器的孔中。

---

2. 나사 M4 × 8(I) 를 사용하여 접지판 (Y)* 을 문서 피니셔의 하단 중앙에 부착합니다 .
*AK-735 동봉 부품

3. 본체에서 커버 (3) 를 분리합니다 .

4. 배출 가이드 (G) 의 핀 (4) 2 개를 본체의 구멍에 맞추어 끼워서 부착합니다 .

---

2. ビス M4×8(I) でアース板 (Y)* をドキュメントフィニッシャー下部センターに取り付ける。
*AK-735 の同梱品

3. 機械本体からカバー(3) を取り外す。

4. 排出ガイド (G) のピン (4)2 本を機械本体の穴に差し込み取り付ける。

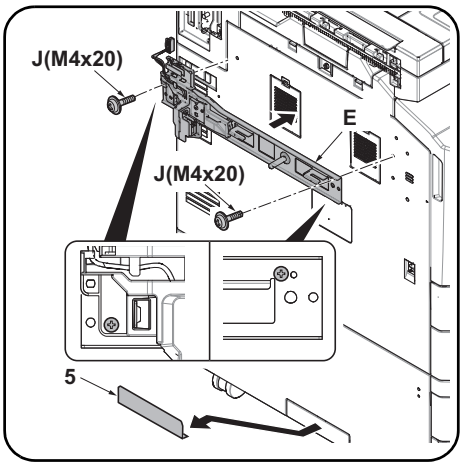

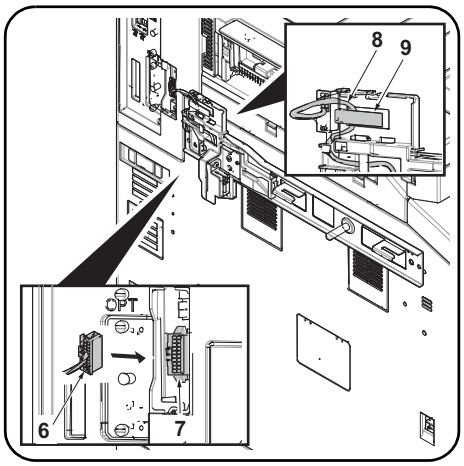

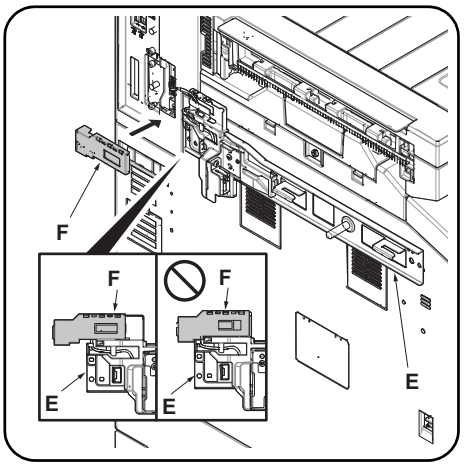

5. Attach the connecting plate (E) to the machine using 2 M4 × 20 screws (J).Attach them at the point as shown above.
6. Remove the breakaway cover (5) from the left cover.

7. Connect the signal line connector (6) to the connector (7) on the machine. Hook the signal line wire (8) onto the hook (9).

8. Fit the connector cover (F) in the connecting plate (E).Take care not to get the cable pinched by objects.Attach it at the point as shown above.Check that the signal line connector is covered by the connector cover (F).

---

5. Fixez la plaque de connexion (E) à la machine à l'aide de 2 vis M4 × 20 (J). Raccordez-les au point indiqué ci-dessus.
6. Déposer le couvercle amovible (5) du couvercle gauche.

7. Raccorder le connecteur de ligne de signal (6) sur le connecteur (7) de la machine. Accrocher le fil de ligne de signal (8) sur le crochet (9).

8. Placer le cache de connecteur (F) dans la plaque de connexion (E). Prendre soin à ne pas pincer le câble. Raccordez-les au point indiqué ci-dessus. Vérifier que le connecteur de ligne de signal est couvert par le cache de connecteur (F).

---

5. Fije la placa de conexión (E) a la máquina mediante 2 tornillos M4 × 20 (J). Conéctelas en el punto que se muestra arriba.
6. Quite la cubierta divisoria (5) de la cubierta izquierda.

7. Conecte el conector de línea de señales (6) al conector (7) de la máquina. Enganche el cable de la línea de señales (8) en el enganche (9).

8. Acople la cubierta del conector (F) en la placa de conexión (E). Tenga cuidado de que el cable no quede atrapado por objetos. Conéctelas en el punto que se muestra arriba. Compruebe que el conector de la línea de señales quede cubierto por la cubierta del conector (F).

---

5. Bringen Sie die Verbindungsplatte (E) mit 2 M4 × 20 Schrauben (J) am Gerät an. Bringen Sie diese an der in der Abbildung gezeigten Stelle an.
6. Nehmen Sie die Ablösungsabdeckung (5) von der linken Abdeckung ab.

7. Verbinden Sie den Stecker der Signalleitung (6) mit dem Steckverbinder im Gerät (7). Hängen Sie das Kabel der Signalleitung (8) in den Befestigungshaken (9) ein.

8. Setzen Sie die Stecker-Abdeckung (F) in die Verbindungsplatte (E) ein. Stellen Sie sicher, dass das Kabel nicht eingeklemmt wird. Bringen Sie diese an der in der Abbildung gezeigten Stelle an. Überprüfen Sie, ob der Stecker der Signalleitung von der Stecker-Abdeckung (F) abgedeckt ist.

---

5. Applicare la piastra di connessione (E) alla macchina utilizzando le 2 viti M4 × 20 (J). Fissare nella posizione sopra indicata.
6. Rimuovere il coperchio di distacco (5) dal coperchio sinistro.

7. Collegare il connettore di linea del segnale (6) al connettore (7) sulla periferica. Agganciare il cavo di linea del segnale (8) al gancio (9).

8. Inserire il copri connettore (F) nella piastra di connessione (E). Fare attenzione a non impigliare il cavo. Fissare nella posizione sopra indicata. Controllare che il connettore della linea del segnale sia coperto dal copri connettore (F).

---

5. 使用 2 颗 M4×20(J) 螺丝将连接板 (E) 安装到机器上。 按图示位置来安装。
6. 去除左侧盖板上的可去除部(5)。

7. 把信号线的接插件 (6) 和机器本体的接插件 (7) 相连接。 把信号线 (8) 挂到挂钩 (9) 上。

8. 将接插件盖板 (F) 嵌入到连接板 (E)。 请注意不要夹住电线。 按图示位置来安装。请确认信号线的接插件是否完全隐藏在接插件盖板中 (F)。

---

5. 나사 M4 × 20(J) 2 개를 사용하여 연결판 (E) 을 본체에 부착합니다 . 위에 표시된 위치에 부착합니다 .
6. 좌측커버의 분할커버부 (5) 를 떼어 냅니다 .

7. 신호선 커넥터 (6) 를 본체의 커넥터 (7) 에 연결합니다 . 신호선 와이어 (8) 를 후크 (9) 에 겁니다 .

8. 커넥터 커버 (F) 를 연결판 (E) 에 맞추어 끼웁니다 . 전선이 커넥터 커버 (F) 에 끼이지 않도록 주의합니다 . 위에 표시된 위치에 부착합니다 . 신호선 커넥터가 커넥터 커버 (F) 에 덮여있는지 확인합니다 .

---

5. 連結板 (E) をビス M4×20(J)2 本で、機械本体に取り付ける。図の位置で取り付けること。
6. 左カバーの割りカバー部 (5) を切り取る。

7. 信号線のコネクター(6) を機械本体のコネクター(7) に接続する。信号線 (8) は、フック (9) に掛けること。

8. コネクターカバー(F) を連結板 (E) にはめ込む。電線を挟み込まない様注意すること。図の位置で取り付けること。信号線のコネクターがコネクターカバー(F) で隠れていることを確認する。

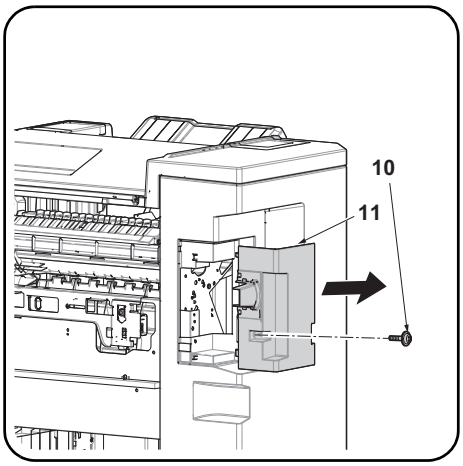

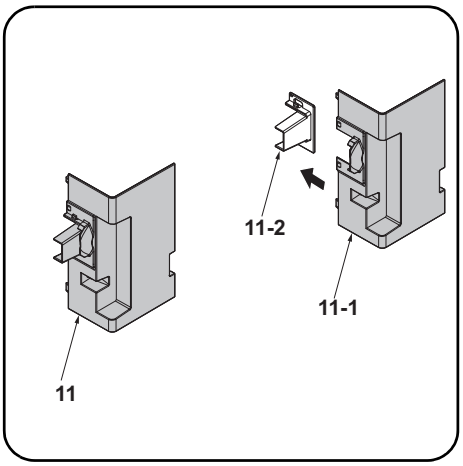

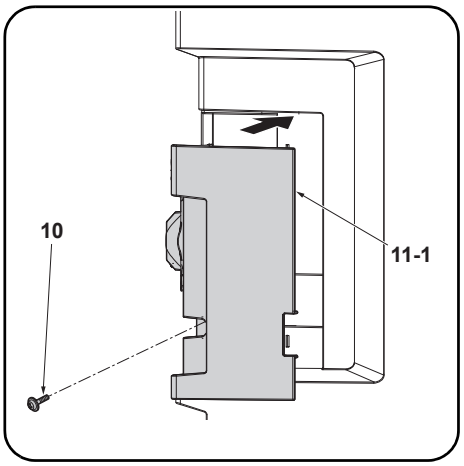

9. Remove the screw (10).Remove the rear cover (11) .

10. Separate the rear cover (11) into the two covers(11-1,11-2).
The cover(11-2) isnot used.

11. Install the cover (11-1) using the screw (10).

---

9. Retirez la vis (10). Retire le capot arrière (11).

10. Séparez le couvercle arrière (11) en deux couvercles (11-1, 11-2).
Le couvercle (11-2) n'est pas utilisé.

11. Installez le couvercle (11-1) à l'aide de la vis (10).

---

9. Quite el tornillo (10). Quite la cubierta posterior (11).

10. Separe la cubierta posterior (11) en las dos cubiertas (11-1, 11-2).
La cubierta (11-2) no se utiliza.

11. Instale la cubierta (11-1) con un tornillo (10).

---

9. Entfernen Sie die Schraube (10). Entfernen Sie die hintere Abdeckung (11).

10. Teilen Sie die hintere Abdeckung (11) in zwei Abdeckungen (11-1, 11-2) auf.
Die Abdeckung (11-2) wird nicht benötigt.

11. Installieren Sie die Abdeckung (11-1) mit den Schrauben (10).

---

9. Togliere la vite (10). Rimuovere il coperchio posteriore (11).

10. Separare il coperchio posteriore (11) in due coperchi (11-1,11-2).
Il coperchio (11-2) non viene utilizzato.

11. Installare il coperchio (11-1) utilizzando la vite (10).

---

9. 取下螺丝（10）。 取下后盖板（11）。

10. 将后盖板 (11) 分成 2 个盖板 (11-1, 11-2)。
不需要盖板 (11-2)。

11. 使用螺丝 (10) 来安装盖板 (11-1)。

---

9. 나사 (10) 를 제거합니다 . 후면 커버 (11) 를 제거합니다 .

10. 후면 커버 (11) 를 2개의 커버 (11-1, 11-2) 로 분리합니다 .
커버 (11-2) 는 사용되지 않습니다 .

11. 나사 (10) 를 사용하여 커버 (11-1) 를 장착합니다 .

---

9. ビス (10) を外す。後カバー(11) を取り外す。

10. 後カバー(11) を 2 つのカバー(11-1, 11-2) に分ける。
カバー(11-2) は不要。

11. ビス (10) でカバー(11-1)を取り付ける。

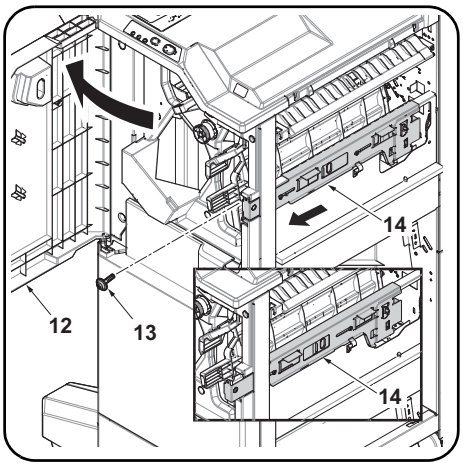

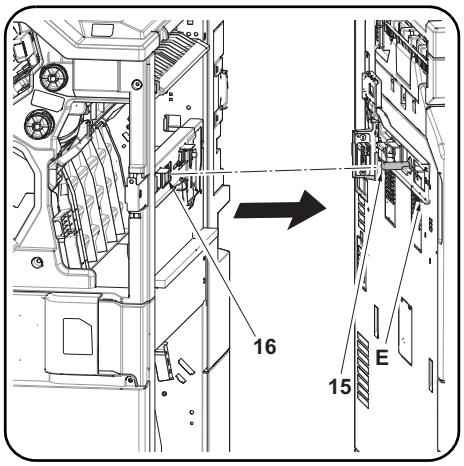

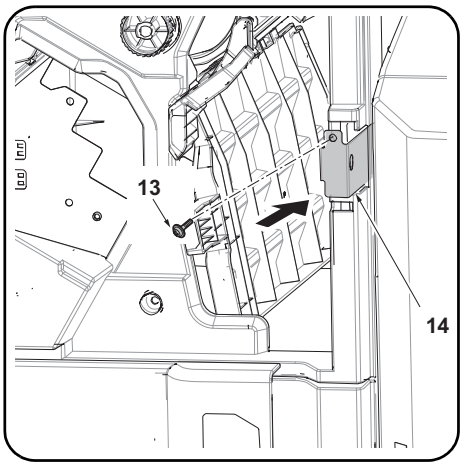

12. Open the document finisher upper front cover (12). Remove the screw (13).Pull the lock frame (14) frontwards.

13. Insert the pin (15) on the connecting plate (E) into the hole (16) on the document finisher.Connect the document finisher to the machine.
* If you cannot connect the document finisher, adjust the height as described on page 15.

14. Slowly push the lock frame (14) fully into the machine so that the connectors at the far end are connected.

15. Secure the lock frame (14) using the screw (13) removed in step 12.

---

12. Ouvrir le couvercle avant supérieur du finisseur de document (12). Retirez la vis (13). Tirer le cadre de verrouillage (14) vers le bas.

13. Introduire la broche (15) sur la plaque de connexion (E) dans le trou (16) sur le finisseur de document.Connecter le finisseur de document sur la machine.
* S'il s'avère impossible de connecter le finisseur de document, en régler la hauteur comme décrit en page 15.

14. Pousser doucement le cadre de verrouillage (14) à fond dans la machine de sorte que les connecteurs à l'extrémité soient raccordés.

15. Fixez le bâti de verrouillage (14) à l'aide de la vis (13) déposée à l'étape 12.

---

12. Abra la cubierta frontal superior del finalizador de documentos (12). Quite el tornillo (13). Empuje el marco de cierre (14) hacia delante.

13. Inserte el pasador (15) de la placa de conexión (E) en el orificio (16) del finalizador de documentos.Conecte el finalizador de documentos a la máquina.
* Si no puede conectar el finalizador de documentos, ajuste la altura como se describe en la página 15.

14. Empuje lentamente y hasta el fondo el marco del cierre (14) hacia la máquina de modo que se conecten los conectores en el extremo más lejano.

15. Asegure la carcasa de bloqueo (14) por medio del tornillo (13) quitado en el paso 12.

---

12. Öffnen Sie die obere vordere Abdeckung des Finishers (12). Entfernen Sie die Schraube (13). Ziehen Sie die Verriegelung (14) nach vorne.

13. Setzen Sie den Stift (15) der Verbindungsplatte (E) in die Öffnung (16) des Finishers. Verbinden Sie den Finisher mit dem Gerät.
* Falls Sie den Finisher nicht anschließen können, sollten Sie die Höhe wie auf Seite 15 beschrieben einstellen.

14. Schieben Sie die Verriegelung (14) wieder langsam ins Gerät, so dass die Verbindungen am anderen Ende des Geräts geschlossen werden.

15. Befestigen Sie den Fixierrahmen (14) mit der in Schritt 12 entfernten Schraube (13).

---

12. Aprire il coperchio frontale superiore del finisher documenti (12). Togliere la vite (13). Tirare in avanti la frame di blocco (14).

13. Inserire il perno (15) della piastra di connessione (E) nel foro (16) del finisher documenti. Collegare il finisher documenti alla macchina.
* Se non è possibile collegare la finisher documenti, regolare l'altezza come descritto a pagina 15.

14. Spingere lentamente la frame di blocco (14) nella macchina in modo che i connettori all'estremità risultino collegati.

15. Fissare il telaio di bloccaggio (14) utilizzando la vite (13) rimossa nel passo 12.

---

12. 打开装订器的前上盖板（12）。 取下螺丝（13）。 向身体前侧拉出固定架（14）。

13. 将连接板 (E) 的销钉（15）插入装订器的孔（16）中。把装订器连接到机器本体。
※ 如果无法连接，请进行 P15 的 “ 高度调节 ” 。

14. 慢慢的把固定架（14）完全推入机器，这样机器里侧的接插件就可以顺利连接。

15. 使用在步骤 12 中取下的 1 颗螺丝 (13) 来固定锁框 (14)。

---

12. 문서 피니셔의 전면 상커버 (12) 를 엽니다 . 나사 (13) 를 제거합니다 . 잠금 프레임 (14) 을 앞으로 뺍니다 .

13. 연결판 (E) 의 핀 (15) 을 문서 피니셔의 구멍 (16) 에 삽입합니다 . 문서 피니셔를 본체에 연결합니다 .
※ 연결할 수 없는 경우에는 P15 의「높이조정」을 할 것 .

14. 본체 뒷쪽의 커넥터가 연결되도록 잠금 프레임 (14) 을 본체 안으로 천천히 밀어 넣습니다 .

15. 순서 12 에서 뺀 나사 (13) 1 개로 잠금 프레임 (14) 을 고정합니다 .

---

12. ドキュメントフィニッシャーの前上カバー (12) を開く。ビス (13) を外す。ロックフレーム (14) を手前に引く。

13. 連結板 (E) のピン (15) をドキュメントフィニッシャーの穴 (16) に挿入する。ドキュメントフィニッシャーを機械本体に接続する。
※ 連結できない場合は、P15 の「高さ調整」を行う。

14. 機械奥側のコネクタが接続されるように、ロックフレーム (14) をゆっくり奥に押す。

15. 手順 12 で外したビス(13)で、ロックフレーム(14)を固定する。

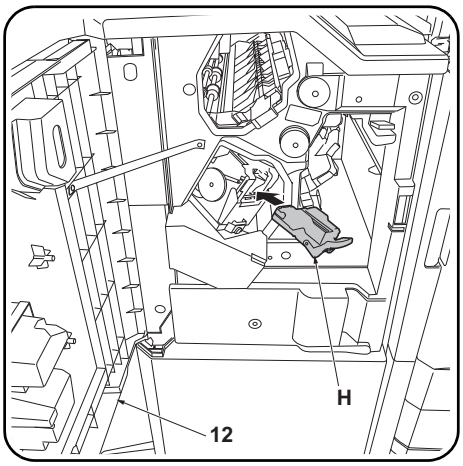

16. Install the staple cartridge (H).
17. Close the upper front cover (12).

Proceed to adjusting the stapling position on page 20.

---

16. Installer la cartouche d'agrafes (H).
17. Refermer le couvercle avant supérieur (12).

Passez à l'ajustement de la position d'agrafage page 20.

---

16. Instale el cartucho de grapas (H).
17. Cierre la cubierta frontal superior (12).

Proceda al ajuste de la posición de grapado en la página 20.

---

16. Installieren Sie das Heftklammer-Magazin (H).
17. Schließen Sie die obere vordere Abdeckung (12).

Fahren Sie mit der Justage der Heftposition auf Seite 20 fort.

---

16. Installare il contenitore punti (H).
17. Chiudere il coperchio superiore anteriore (12).

Proseguire con la regolazione della posizione di pinzatura a pagina 20.

---

16. 安装装订针盒 (H)。
17. 关闭前部上盖板 (12)。

跳至 P20「调节装订位置」。

---

16. 스테이플 카트리지 (H) 를 설치합니다 .
17. 앞 상커버 (12) 를 닫습니다 .

20 페이지의 스테이플 위치 조정으로 진행합니다 .

---

16. ステープルカートリッジ (H) を取り付ける。
17. 前上カバー(12) を閉じる。

P20「ステープル位置の調整」に進む。

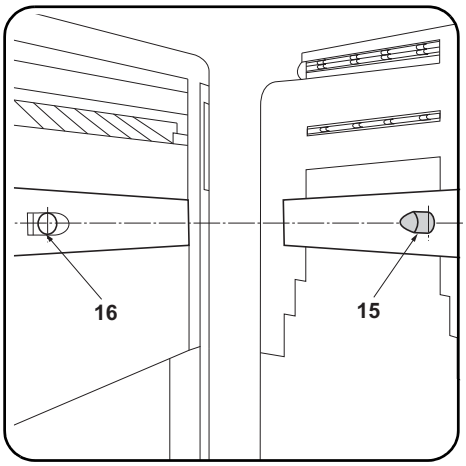

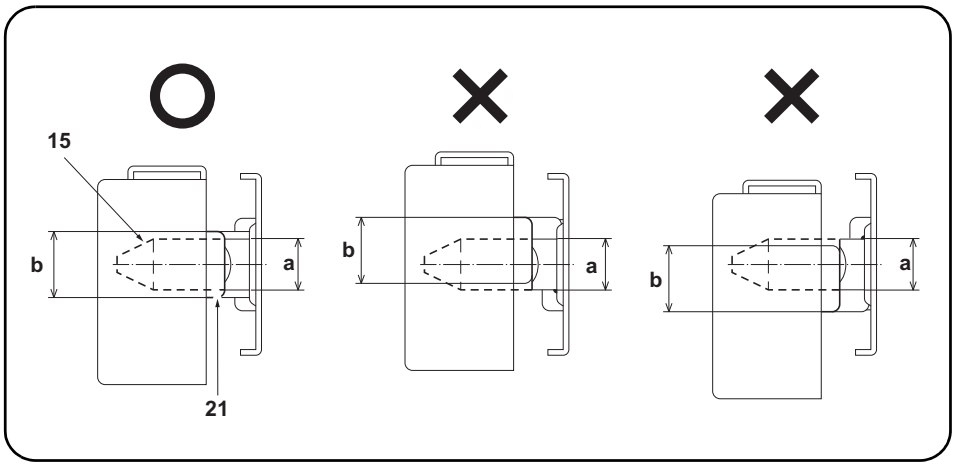

Adjusting the height

1. Check that the respective heights of the pins (15) on the connecting plate installed on the machine and the connecting holes (16) on the document finisher comply with the references below.

Compliant: The diameter (a) of the pin (15) is within the height range (b) of the curved section (21).
Non-compliant: The diameter (a) of the pin (15) is extends beyond the height range (b) of the curved section (21).
If the heights are non-compliant, use the procedure below to adjust the height.

Réglage de la hauteur

1. Vérifiez que les hauteurs respectives des ergots (15) sur la plaque de connexion installée sur la machine et les trous de connexion (16) sur le finisseur de document sont conformes aux références ci-dessous.

Bon : Le diamètre (a) de l'ergot (15) est dans les limites de hauteur (b) de la partie courbée (21).
Mauvais : Le diamètre (a) de l'ergot (15) dépasse les limites de hauteur (b) de la partie courbée (21).
Si la hauteur n'est pas conforme, l'ajuster en procédant comme indiqué ci-dessous.

Ajuste de la altura

1. Compruebe que las alturas correspondientes de los pasadores (15) de la placa de fijación instalados en la máquina y los orificios de conexión (16) del finalizador de documentos cumplen las referencias de abajo.

Cumple: el diámetro (a) del pasador (15) está dentro del rango de altura (b) de la sección curvada (21).
No cumple: el diámetro (a) del pasador (15) sobrepasa el rango de altura (b) de la sección curvada (21).
Si las alturas no cumplen con las especificaciones, utilice el siguiente procedimiento para ajustar la altura.

Einstellen der Höhe

1. Überprüfen Sie, dass die jeweilige Höhe der Stifte (15) der am Gerät installierten Verbindungsplatte und Verbindungsöffnungen (16) des Finishers mit den unten angegebenen Werten übereinstimmen.

Korrekt: Der Durchmesser (a) des Stifts (15) befindet sich im Höhenbereich (b) des Kurvenabschnitts (21).
Nicht korrekt: Der Durchmesser (a) des Stifts (15) ragt über den Höhenbereich (b) des Kurvenabschnitts (21) hinaus.
Falls die Höhen nicht korrekt sind, müssen Sie sie wie folgend einstellen.

Regolazione dell'altezza

1. Controllare che le rispettive altezze dei perni (15) sulla piastra di connessione installata sulla macchina e i fori di connessione (16) sulla finisher documenti corrispondano ai riferimenti mostrati sotto.

Conformità: Il diametro (a) del perno (15) è compreso nella gamma di altezza (b) della sezione curvata (21).
Non conformità: Il diametro (a) del perno (15) si estende oltre la gamma di altezza (b) della sezione curvata (21).
Se le altezze sono non corrispondenti, utilizzare la procedura riportata sotto per regolare l'altezza.

高度调节

1. 确认机器主机上安装的连接板的销钉 (15) 和装订器的连接用的孔 (16) 的高度是否符合以下标准。

符　合: 销钉 (15) 的直径 (a) 在弯曲部 (21) 的高度 (b) 的范围内。
不符合: 销钉 (15) 的直径 (a) 超出了弯曲部 (21) 的高度 (b) 的范围。
不符合时，通过以下步骤进行调节。

높이조정

1. 본체에 설치된 연결판의 핀 (15) 과 문서 피니셔의 연결용 구멍 (16) 의 각 높이가 아래의 기준에 부합하는지 확인합니다 .

적 합 :핀 (15) 의 직경 (a) 가 곡선부 (21) 의 높이 (b) 의 범위에 들어간다 .
부적합:핀 (15) 의 직경 (a) 가 곡선부 (21) 의 높이 (b) 의 범위를 넘는다 .
부적합의 경우에는 이하의 순서대로 조정합니다 .

高さ調整

1. 機械本体に取り付けた連結板のピン (15) とドキュメントフィニッシャーの連結用の穴 (16) の高さが以下の基準に適合するか確認する。

適　合:ピン (15) の直径 (a) が曲げ部 (21) の高さ (b) の範囲に収まっている。
不適合:ピン (15) の直径 (a) が曲げ部 (21) の高さ (b) の範囲からはみだしている。
不適合の場合は、以下の手順で調整する。

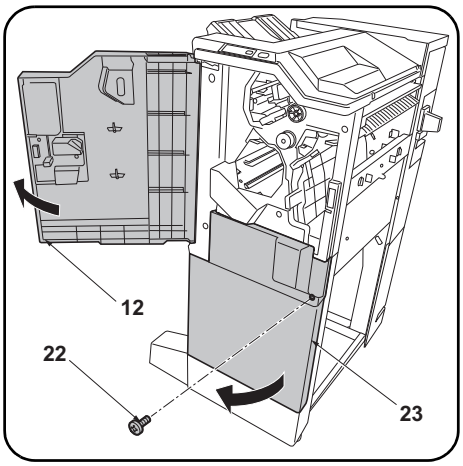

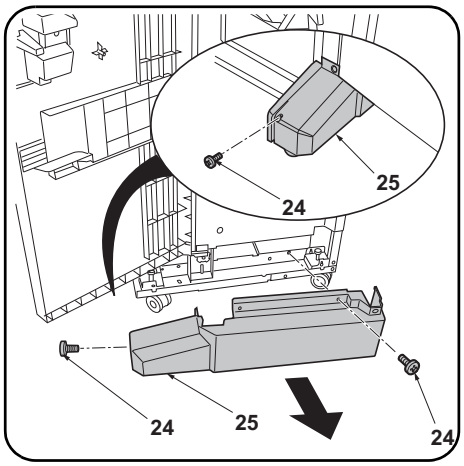

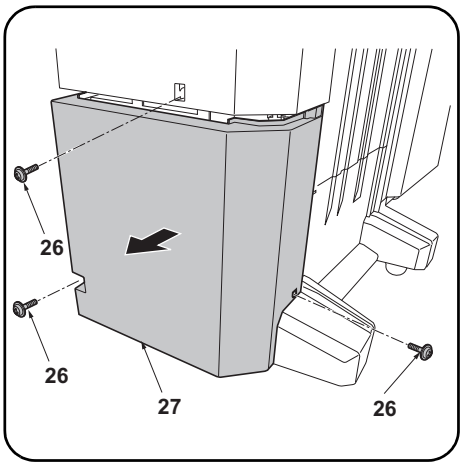

2. Open the upper front cover (12) of the document finisher.
3. Remove the screw (22) and open the lower front cover (23).

4. Remove the 2 screws (24) and remove the foot cover (25).

5. Remove the 3 screws (26) and remove the lower rear cover (27).

---

2. Ouvrir le couvercle avant supérieur (12) du finisseur de document.
3. Déposer la vis (22) et ouvrir le couvercle avant inférieur (23).

4. Déposer les 2 vis (24) puis le couvercle du pied (25).

5. Déposer les 3 vis (26) puis le couvercle arrière inférieur (27).

---

2. Abra la cubierta frontal superior (12) del finalizador de documentos.
3. Quite el tornillo (22) y abra la cubierta frontal inferior (23).

4. Quite los 2 tornillos (24) y quite la cubierta de la pata (25).

5. Quite los 3 tornillos (26) y quite la cubierta posterior inferior (27).

---

2. Öffnen Sie die obere vordere Abdeckung (12) des Finishers.
3. Entfernen Sie die Schraube (22) und öffnen Sie die untere vordere Abdeckung (23).

4. Entfernen Sie die 2 Schrauben (24) und nehmen Sie die Fußabdeckung (25) ab.

5. Entfernen Sie die 3 Schrauben (26) und nehmen Sie die untere hintere Abdeckung (27) ab.

---

2. Aprire il coperchio superiore anteriore (12) della finisher documenti.
3. Rimuovere la vite (22) ed aprire il coperchio inferiore anteriore (23).

4. Rimuovere le 2 viti (24) e quindi rimuovere la copertura del piede (25).

5. Rimuovere le 3 viti (26) e quindi rimuovere il coperchio inferiore posteriore (27).

---

2. 打开装订器的前部上盖板 (12)。
3. 拆除 1 颗螺丝 (22)，打开前部下盖板 (23)。

4. 拆除 2 颗螺丝 (24)，拆下脚座盖板 (25)。

5. 拆除 3 颗螺丝 (26)，拆下后部下盖板 (27)。

---

2. 문서 피니셔 앞 상커버 (12) 를 엽니다 .
3. 나사 (22) 1 개를 제거하고 앞 하커버 (23) 를 엽니다 .

4. 나사 (24) 2 개를 제거하고 , 풋커버 (25) 를 제거합니다 .

5. 나사 (26) 3 개를 제거하고 , 뒤 하커버 (27) 를 제거합니다 .

---

2. ドキュメントフィニッシャーの前上カバー (12) を開く。
3. ビス (22)1 本を外し、前下カバー(23) を開く。

4. ビス (24)2 本を外し、フットカバー(25) を取り外す。

5. ビス (26)3 本を外し、後下カバー(27) を取り外す。

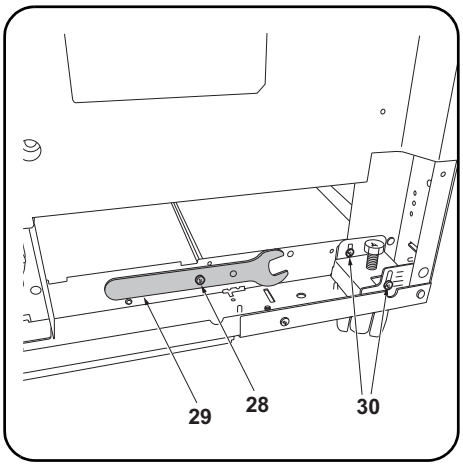

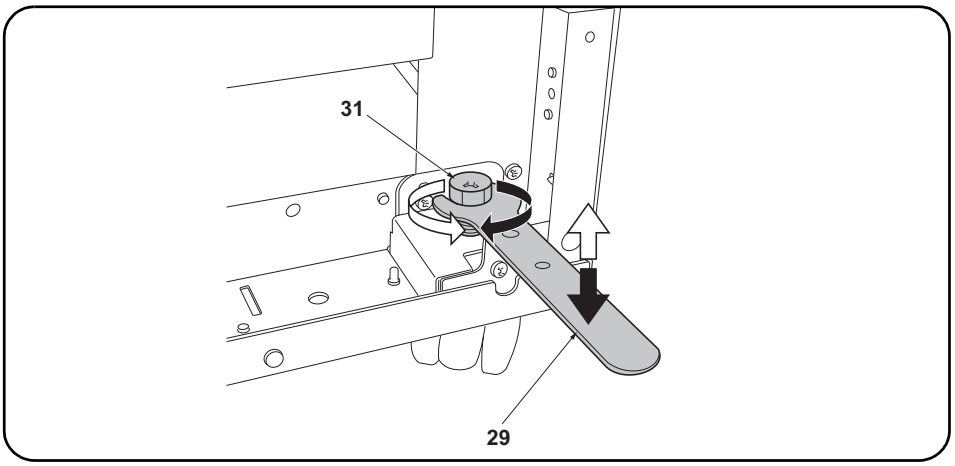

6. Remove the screw (28) to remove the spanner (29).
7. Loosen the 2 screws (30) on the front right and on the rear right of the document finisher.
8. Turn the adjustment bolts (31) with the spanner (29) to adjust the height of the document finisher. Turning the adjustment bolt clockwise lifts the document finisher, and turning it counterclockwise lowers the document finisher.
9. Retighten each of the 2 screws (30) and replace the spanner (29).

---

6. Déposer la vis (28) pour libérer la clé (29).
7. Desserrer les 2 vis (30) du côté avant droit et arrière droit du finisseur de document.
8. Faire tourner les boulons de réglage (31) avec la clé (29) pour ajuster la hauteur du finisseur de document.
Tourner le boulon de réglage dans le sens horloger pour lever le finisseur de document, et dans le sens contraire au sens horloger pour le descendre.
9. Resserrer les 2 vis (30) et repositionner la clé (29) au même endroit.

---

6. Quite el tornillo (28) para extraer la llave inglesa (29).
7. Afloje los 2 tornillos (30) en los lados derecho frontal y derecho posterior del finalizador de documentos.
8. Gire los pernos de ajuste (31) con la llave inglesa (29) para ajustar la altura del finalizador de documentos.
Al girar el perno de ajuste en la dirección de las manecillas del reloj se levanta el finalizador de documentos y al girar en sentido contrario a las manecillas del reloj baja el finalizador de documentos.
9. Vuelva a apretar los 2 tornillos (30) y coloque la llave inglesa en su lugar (29).

---

6. Entfernen Sie die Schraube (28), um den Schlüssel (29) abzunehmen
7. Lösen Sie die 2 Schrauben (30) vorne rechts und hinten rechts am Finisher.
8. Drehen Sie die Einstellschrauben (31) mit dem Schlüssel (29), um die Höhe des Finishers einzustellen.
Durch Drehen der Einstellschraube im Uhrzeigersinn wird der Finisher angehoben, während er durch Drehen entgegen dem Uhrzeigersinn abgesenkt wird.
9. Ziehen Sie die 2 Schrauben (30) wieder an und verstauen Sie den Schlüssel (29) wieder.

---

6. Rimuovere la vite (28) per rimuovere la chiave (29).
7. Allentare le 2 viti (30) sulla parte anteriore destra e posteriore destra della finisher documenti.
8. Ruotare i bulloni di regolazione (31) con la chiave (29) per regolare l'altezza della finisher documenti.
Ruotando il bullone di regolazione in senso orario si solleva la finisher documenti, mentre ruotandolo in senso antiorario si abbassa la finisher documenti.
9. Ristringere ciascuna delle 2 viti (30) e riporre la chiave (29).

---

6. 取下螺丝（28）以便拆下扳手（29）。
7. 拧松装订器右前侧与右后侧的各 2 颗螺丝（30）。
8. 使用扳手（29）旋转调节螺栓（31），以调节装订器的高度。
将调节螺栓向顺时针方向旋转，装订器的高度升高，逆时针方向旋转则装订器的高度降低。
9. 拧紧各 2 颗螺丝（30），按原样安装扳手（29）。

---

6. 나사 (28) 1 개를 빼고 , 스패너 (29) 를 떼어 냅니다 .
7. 문서 피니셔 우측 앞과 뒤의 나사 (30) 각 2 개를 느슨하게 합니다 .
8. 스패너 (29) 로 조정 볼트 (31) 를 돌려 문서 피니셔의 높이를 조정한다 .
조정 볼트를 시계방향으로 돌리면 문서 피니셔의 높이가 높아지고 , 반 시계방향으로 돌리면 낮아 집니다 .
9. 나사 (30) 각 2 개를 조이고 스패너 (29) 를 원래 자리에 장착합니다 .

---

6. ビス（28）1 本を外し、スパナー（29）を取り外す。
7. ドキュメントフィニッシャー右前と右後のビス（30）各 2 本を緩める。
8. スパナー（29）で調整ボルト（31）を回し、ドキュメントフィニッシャーの高さを調整する。
調整ボルトを時計方向に回すとドキュメントフィニッシャーの高さが高くなり、反時計方向に回すと低くなる。
9. ビス（30）各 2 本を締め付け、スパナー（29）を元通り取り付ける。

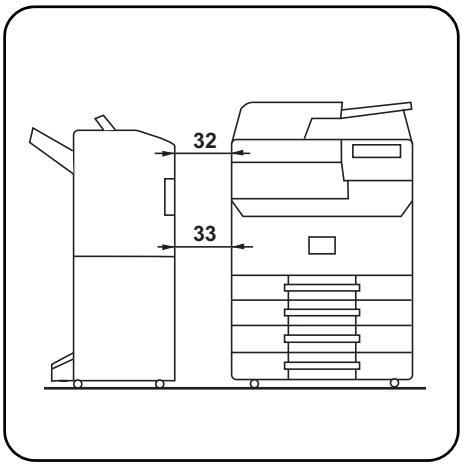

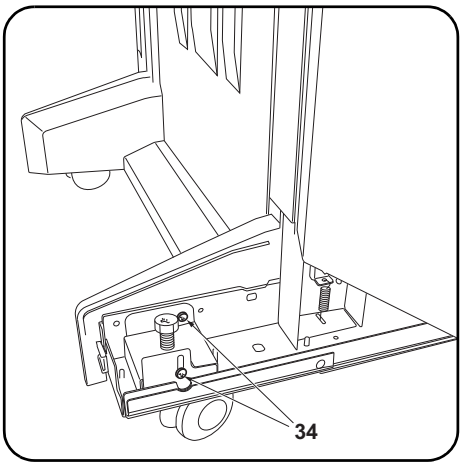

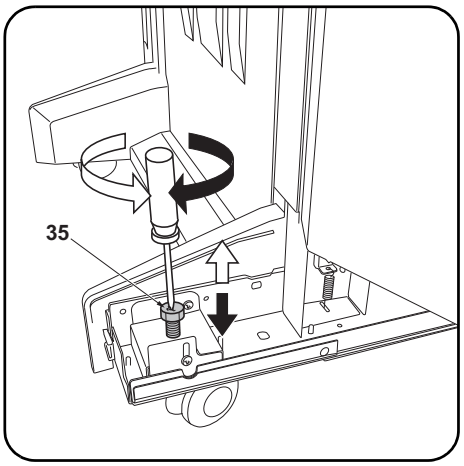

10. If the distances between the document finisher and the machine (32, 33) are unequal, use the procedure below to adjust the spacing.

11. Loosen the 2 screws (34) on the front left and on the rear left of the document finisher.

12. Turn the adjustment bolts (35) with a Philips-head screwdriver to adjust the height of the document finisher.
Turning the adjustment bolt clockwise lifts the document finisher, and turning it counterclockwise lowers the document finisher.

---

10. Si les distances entre le finisseur de document et la machine (32, 33) sont inégales, régler l'espacement en procédant de la manière suivante.

11. Desserrer les 2 vis (34) du côté avant gauche et arrière gauche du finisseur de document.

12. Faire tourner les boulons de réglage (35) à l'aide d'un tournevis cruciforme pour ajuster la hauteur du finisseur de document.
Tourner le boulon de réglage dans le sens horloger pour lever le finisseur de document, et dans le sens contraire au sens horloger pour le descendre.

---

10. Si las distancias entre el finalizador de documentos y la máquina (32, 33) no son iguales, utilice el siguiente procedimiento para ajustar la separación.

11. Afloje los 2 tornillos (34) en los lados izquierdo frontal e izquierdo posterior del finalizador de documentos.

12. Gire los pernos de ajuste (35) con un destornillador de cabeza Philips para ajustar la altura del finalizador de documentos.
Al girar el perno de ajuste en la dirección de las manecillas del reloj se levanta el finalizador de documentos y al girar en sentido contrario a las manecillas del reloj baja el finalizador de documentos.

---

10. Falls die Abstände zwischen dem Finisher und dem Gerät (32, 33) ungleich sind, führen Sie die unten angegebenen Schritte aus, um den Abstand zu korrigieren.

11. Lösen Sie die 2 Schrauben (34) vorne links und hinten links am Finisher.

12. Stellen Sie die Einstellschrauben (35) mit einem Kreuzschlitzschraubendreher ein, um die Höhe des Finishers zu korrigieren.
Durch Drehen der Einstellschraube im Uhrzeigersinn wird der Finisher angehoben, während er durch Drehen entgegen dem Uhrzeigersinn abgesenkt wird.

---

10. Se le distanze tra la finisher documenti e la macchina (32, 33) sono diverse, attenersi alla sottostante procedura per regolare la spaziatura.

11. Allentare le 2 viti (34) sulla parte anteriore sinistra e posteriore sinistra della finisher documenti.

12. Ruotare i bulloni di regolazione (35) con un cacciavite con testa a croce tipo Philips per regolare l'altezza della finisher documenti.
Ruotando il bullone di regolazione in senso orario si solleva la finisher documenti, mentre ruotandolo in senso antiorario si abbassa la finisher documenti.

---

10. 装订器与机器的间隙 (32、33) 不等时，按以下步骤进行调节。

11. 拧松装订器左前侧与左后侧的各 2 颗螺丝 (34)。

12. 使用十字螺丝刀旋转调节螺栓 (35)，以调节装订器的高度。
将调节螺栓向顺时针方向旋转，装订器的高度升高，逆时针方向旋转则装订器的高度降低。

---

10. 문서 피니셔와 본체의 거리 (32, 33) 가 동일하지 않는 경우 아래의 절차에 따라 간격을 조정합니다 .

11. 문서 피니셔 좌측 앞과 뒤의 나사 (34) 각 2 개를 느슨하게 합니다 .

12. 플러스 드라이버로 조정 볼트 (35) 를 돌려 문서 피니셔 높이를 조정합니다 .
조정 볼트를 시계방향으로 돌리면 문서 피니셔의 높이가 높아지고 , 반 시계방향으로 돌리면 낮아 집니다 .

---

10. ドキュメントフィニッシャーと機械本体の間隔(32、33)が等しくない場合は、以下の手順で調整を行う。

11. ドキュメントフィニッシャー左前と左後のビス (34) 各 2 本を緩める。

12. プラスドライバーで調整ボルト (35) を回し、ドキュメントフィニッシャーの高さを調整する。
調整ボルトを時計方向に回すとドキュメントフィニッシャーの高さが高くなり、反時計方向に回すと低くなる。

13. Retighten each of the 2 screws (34).
14. Reinstall the foot cover (25) and lower rear cover (27).

---

13. Resserrer les 2 vis (34).
14. Reposer le couvercle du pied (25) et le couvercle arrière inférieur (27).

---

13. Vuelva a apretar los 2 tornillos (34).
14. Vuelva a instalar la cubierta de la pata (25) y la cubierta posterior inferior (27).

---

13. Ziehen Sie die 2 Schrauben (34) nach.
14. Setzen Sie die Fußabdeckung (25) und die untere hintere Abdeckung (27) wieder ein.

---

13. Ristringere ciascuna delle 2 viti (34).
14. Reinstallare la copertura del piede (25) e il coperchio inferiore posteriore (27).

---

13. 拧紧各 2 颗螺丝 (34)。
14. 按原样安装脚座盖板 (25)、后部下盖板 (27)。

---

13. 나사 (34) 각 2 개를 조입니다 .
14. 풋커버 (25), 뒤 하커버 (27) 를 원래대로 제거합니다 .

---

13. ビス (34) 各 2 本を締め付ける。
14. フットカバー(25)、後下カバー(27) を元通りに取り付ける。

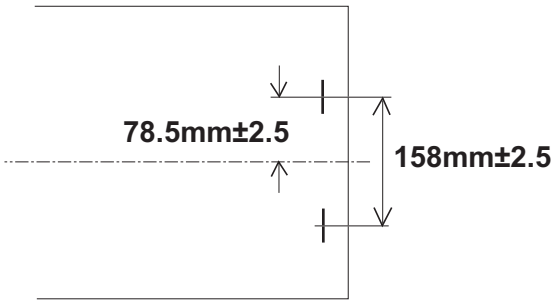

Adjusting the stapling position

1. Connect the machine power plug to the wall outlet and turn the machine main power switch on.
2. Make a test copy using staple mode (double stapled).
3. Check whether the stapling position is off-center. If the staple position is off-center, follow the procedure below to adjust the position.
   <Reference value> 78.5 mm ±2.5 mm from the center of the paper

---

Ajustement de la position d'agrafage

1. Insérer la fiche d'alimentation de la machine dans la prise murale et mettre la machine sous tension.
2. Procéder à une copie d'essai en mode agrafage (double agrafage).
3. Vérifier que la position d'agrafage n'est pas en décalage.Si la position d'agrafage est décalée, la régler en procédant de la manière suivante.
   <Valeur de référence> 78,5 mm ±2,5 mm depuis le milieu de la feuille de papier.

Ajuste de la posición de grapado

1. Conecte el enchufe de la máquina al receptáculo de pared y encienda el interruptor principal de la máquina.
2. Haga una copia de prueba en el modo de grapado (grapado doble).
3. Compruebe si la posición de grapado está descentrada.Si la posición de grapado está descentrada, realice el siguiente procedimiento para ajustar la posición.
   <Valor de referencia> 78,5 mm ± 2,5 mm del centro del papel

---

Justage der Heftposition

1. Stecken Sie den Netzstecker des Geräts in die Wandsteckdose und schalten Sie das Gerät am Hauptschalter ein.
2. Erstellen Sie eine Probekopie im Heftmodus (doppelt geheftet).
3. Prüfen Sie, ob die Heftposition außermittig ist.Falls die Heftposition außermittig ist, müssen Sie sie wie folgend einstellen.
   <Bezugswert> 78,5 mm ±2,5 mm von der Blattmitte

Regolazione della posizione di pinzatura

1. Collegare la spina alla presa di corrente a muro e accendere l'interruttore di alimentazione della macchina.
2. Eseguire una copia di prova utilizzando la modalità di spillatura con punti metallici (spillatura doppia).
3. Verificare che la posizione di spillatura non sia fuori centro.Se la posizione di spillatura è fuori centro, seguire la procedura riportata sotto per regolare la posizione.
   <Valore di riferimento> 78,5 mm ± 2,5 mm dal centro del foglio

---

调节装订位置

1. 将机器上的电源插头插入电源插座中，打开主电源开关。
2. 在装订模式（2 点固定）下进行测试复印。
3. 确认装订位置的中心偏差。装订位置偏离中心时，按以下步骤进行调节。
   ＜基准值＞ 距离纸张中心 78.5㎜± 2.5㎜

스테이플 위치 조정

1. 본체 전원플러그를 콘센트에 꽂고 주 전원 스위치를 ON 으로 합니다 .
2. 스테이플 모드 (2 곳) 에서 시험복사를 합니다 .
3. 스테이플 위치의 센터 어긋남을 확인합니다 . 스테이플 위치가 중심에서 벗어난 경우다음 순서로 조정을 합니다 .
   ＜기준치＞ 용지 센터에서 78.5mm± 2.5mm

ステープル位置の調整

1. 機械本体の電源プラグをコンセントに差し込み、主電源スイッチを ON にする。
2. ステープルモード(2 箇所止め)でテストコピーを行う。
3. ステープル位置のセンターずれを確認する。ステープル位置が中心からずれていた場合、次の手順で調整を行う。
   ＜基準値＞ 用紙センターより 78.5㎜± 2.5㎜

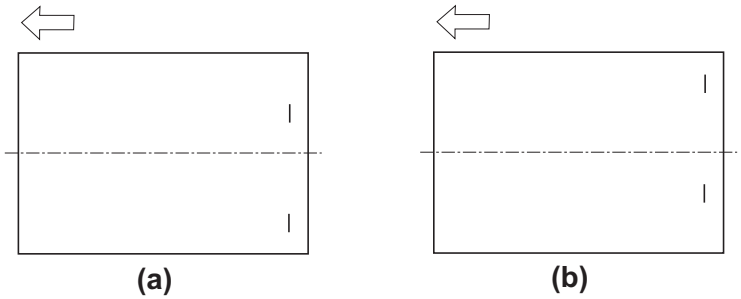

4. Set maintenance mode U246, select Finisher and Staple HP.
5. Adjust the values.
If the paper is stapled too close to the front of the machine (a): Increase the setting value.
If the paper is stapled too close to the rear of the machine (b): Decrease the setting value.

6. Perform a test copy.
7. Repeat steps 4 to 6 until the staple position is within the reference value.
<Reference value> 78.5 mm ±2.5 mm from the center of the paper

---

4. Passer en mode maintenance U246, sélectionner Finisher et Staple HP.
5. Régler les valeurs.
Si le papier est agrafé trop près de l'avant de la machine (a): augmenter la valeur de réglage.
Si le papier est agrafé trop près de l'arrière de la machine (b): réduire la valeur de réglage.

6. Effectuer une copie de test.
7. Recommencer les étapes 4 à 6 jusqu'à ce que la position d'agrafe soit conforme à la valeur de référence
<Valeur de référence> 78,5 mm ±2,5 mm depuis le milieu de la feuille de papier.

---

4. Entre en el modo de mantenimiento U246, seleccione Finisher y Staple HP.
5. Ajuste los valores.
Si el grapado del papel se encuentra demasiado cerca del frente de la máquina (a): aumente el valor de configuración.
Si el grapado del papel se encuentra demasiado cerca de la parte posterior de la máquina (b): disminuya el valor de configuración.

6. Haga una copia de prueba.
7. Repita los pasos 4 a 6 hasta que la posición de grapado se encuentre dentro del valor de referencia.
<Valor de referencia> 78,5 mm ± 2,5 mm del centro del papel

---

4. Schalten Sie in den Wartungsmodus U246, wählen Sie Finisher und Staple HP.
5. Die Werte einstellen.
Falls das Papier zu nahe am vorderen Rand des Geräts (a) abgestapelt wird: Vergrößern Sie den Stellwert.
Falls das Papier zu nahe am hinteren Rand des Geräts (b) abgestapelt wird: Verkleinern Sie den Stellwert.

6. Eine Testkopie erstellen.
7. Wiederholen Sie die Schritte 4 bis 6, bis die Heftposition im Bereich des Bezugswerts liegt.
<Bezugswert> 78,5 mm ±2,5 mm von der Blattmitte

---

4. Impostare la modalità manutenzione U246, selezionare Finisher e Staple HP.
5. Regolare i valori.
Se il foglio viene spillato troppo vicino alla parte anteriore della macchina (a): Aumentare il valore di impostazione.
Se il foglio viene spillato troppo vicino alla parte posteriore della macchina (b): Diminuire il valore di impostazione.

6. Eseguire una copia di prova.
7. Ripetere i passi 4 to 6 finché la posizione di spillatura risulta all'interno del valore di riferimento.
<Valore di riferimento> 78,5 mm ± 2,5 mm dal centro del foglio

---

4. 设置维护模式 U246，选择 Finisher、Staple HP。
5. 调整设定值。
装订位置向机器前部偏移时 (a)：调高设定值。
装订位置向机器后部偏移时 (b)：调低设定值。

6. 进行测试复印。
7. 重复步骤 4 ～ 6，直到装订位置在基准范围内为止。
＜基准值＞ 距离纸张中心 78.5mm± 2.5mm

---

4. 메인터넌스 모드 U246 을 세트하고 Finisher, Staple HP 를 선택합니다 .
5. 설정치를 조정합니다 .
스테이플 위치가 기기앞측으로 벗어난 경우 (a):설정치를 높입니다 .
스테이플 위치가 기기뒷측으로 벗어난 경우 (b):설정치를 내입니다 .

6. 시험복사를 합니다 .
7. 스테이플 위치가 기준치내가 될 때까지 순서 4 ~ 6 을 반복합니다 .
＜기준치＞ 용지 센터에서 78.5mm± 2.5mm

---

4. メンテナンスモード U246 をセットし、Finisher、Staple HP を選択する。
5. 設定値を調整する。
ステープル位置が機械前側にずれている場合 (a):設定値を上げる。
ステープル位置が機械後側にずれている場合 (b):設定値を下げる。

6. テストコピーを行う。
7. ステープル位置が基準値内になるまで、手順 4 ～ 6 を繰り返す。
＜基準値＞ 用紙センターより 78.5mm± 2.5mm

303NB5676001

2013. 1
303NB56760-01

INSTALLATION GUIDE FOR FINISHER ATTACHMENT KIT

INSTALLATION GUIDE

GUIDE D’INSTALLATION

GUÍA DE INSTALACION

INSTALLATIONSANLEITUNG

GUIDA ALL’INSTALLAZIONE

安装手册

설치안내서

設置手順書

AK-731

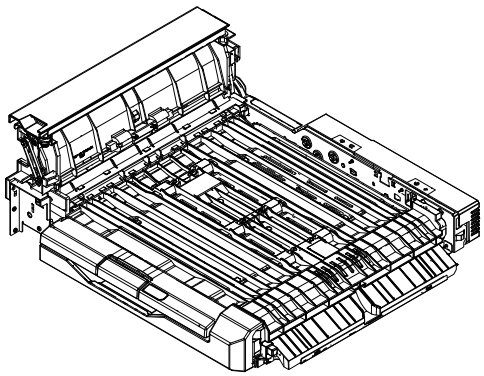

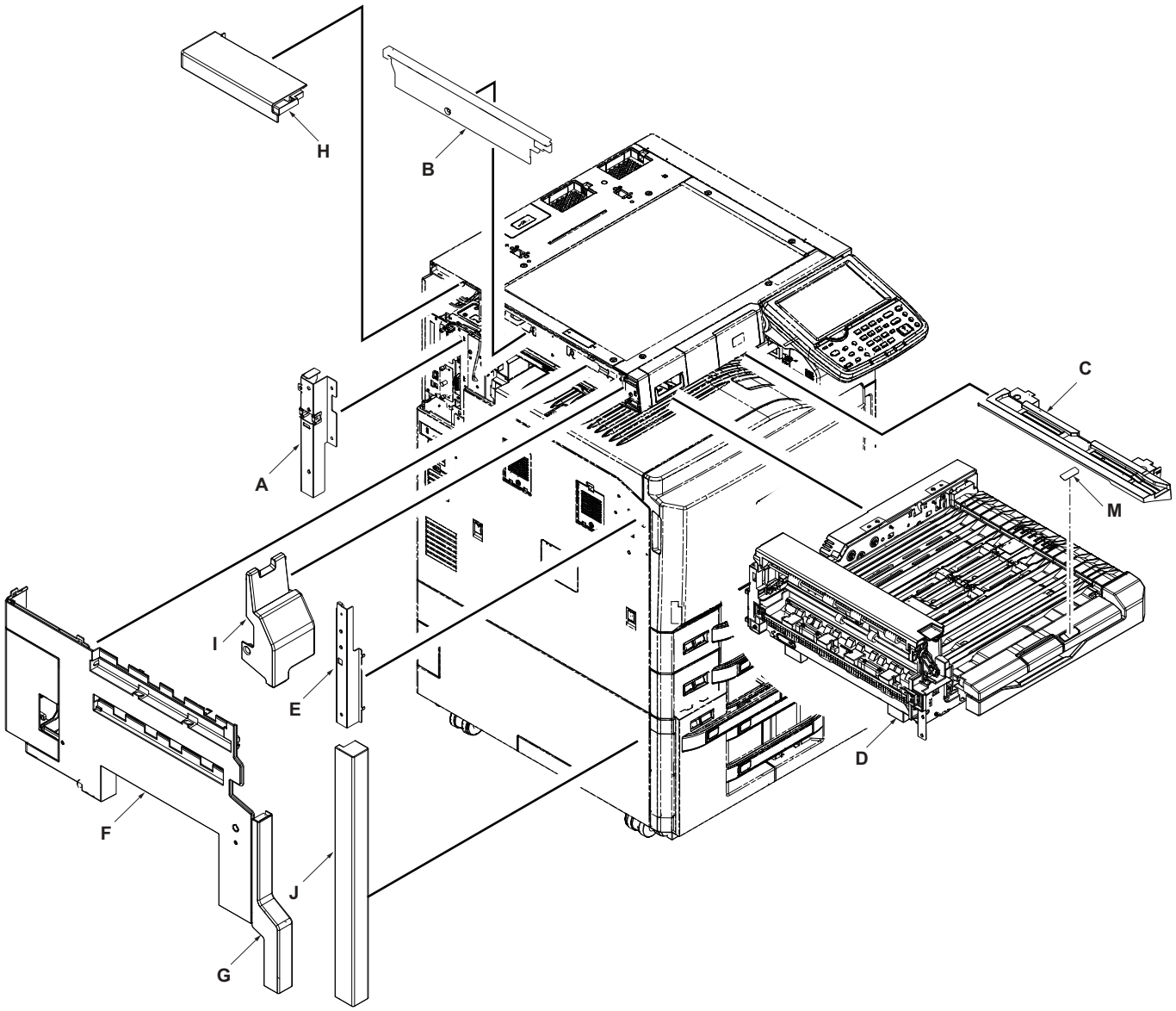
H
B
C
A
M
I
E
D
F
J
G

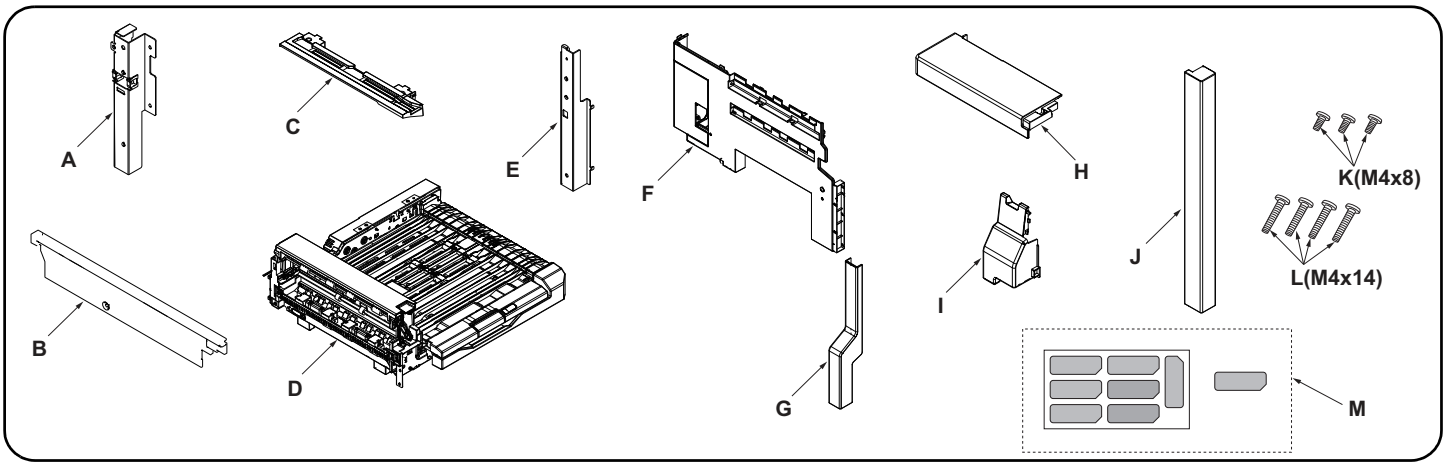

English

Supplied parts

A. Rear left stay 1
B. Left scanner cover 1
C. Rail AK 1
D. AK unit 1
E. Front left stay 1
F. Left cover 1
G. Front cover 1
H. Left upper cover 1
I. Left front cover 1
J. Lower connection cover 1
K. M4 × 8 screw 3
L. M4 × 14 screw 4
M. Label 1

Be sure to remove any tape and/or cushioning material from supplied parts.

Français

Pièces fournies

A. Support arrière gauche 1
B. Capot de scanner gauche 1
C. Rail AK 1
D. Unité AK 1
E. Support avant gauche 1
F. Capot gauche 1
G. Capot avant 1
H. Capot supérieur gauche 1
I. Capot avant gauche 1
J. Capot de connexion inférieur 1
K. Vis M4 × 8 3
L. Vis M4 × 14 4
M. Étiquette 1

Veillez à retirer les morceaux de bande adhésive et/ou les matériaux de rembourrage des pièces fournies.

Español

Partes suministradas

A. Soporte izquierdo trasero 1
B. Cubierta izquierda del escáner 1
C. Kit AK del raíl 1
D. Unidad de AK 1
E. Soporte frontal izquierdo 1
F. Cubierta izquierda 1
G. Cubierta frontal 1
H. Cubierta superior izquierda 1
I. Cubierta frontal izquierda 1
J. Cubierta de conexiones inferior 1
K. Tornillo M4 × 8 3
L. Tornillo M4 × 14 4
M. Etiqueta 1

Asegúrese de despegar todas las cintas y/o material amortiguador de las partes suministradas.

Deutsch

Gelieferte Teile

A. Hintere linke Stütze 1
B. Linke Scanner-Abdeckung 1
C. AK Schiene 1
D. AK Baugruppe 1
E. Vordere linke Stütze 1
F. Linke Abdeckung 1
G. Vordere Abdeckung 1
H. Linke obere Abdeckung 1
I. Linke vordere Abdeckung 1
J. Untere Verbindungsabdeckung 1
K. M4 × 8 Schraube 3
L. M4 × 14 Schraube 4
M. Aufkleber 1

Entfernen Sie Klebeband und/oder Dämpfungsmaterial vollständig von den mitgelieferten Teilen.

Italiano

Parti di fornitura

A. Supporto posteriore sinistro 1
B. Coperchio sinistro dello scanner 1
C. Binario AK 1
D. Unità AK 1
E. Supporto anteriore sinistro 1
F. Coperchio sinistro 1
G. Coperchio frontale 1
H. Coperchio superiore sinistro 1
I. Coperchio frontale sinistro 1
J. Coperchio connessione inferior 1
K. Vite M4 × 8 3
L. Vite M4 × 14 4
M. Etichetta 1

Accertarsi di rimuovere tutti i nastri adesivi e/o il materiale di imbottitura dalle parti fornite.

简体中文

附属品

A. 左后部支架 1
B. 扫描仪左盖板 1
C. 导轨 AK 1
D. AK 组件 1
E. 左前部支架 1
F. 左盖板 1
G. 前盖板 1
H. 左上部盖板 1
I. 左前盖板 1
J. 连接下盖板 1
K. M4×8 螺丝 3
L. M4×14 螺丝 4

(M) 并非附属品。
如果附属品上带有固定胶带，缓冲材料时务必揭下。

한국어

동봉품

A. 좌측 뒷 받침대 1
B. 스캐너 좌측 커버 1
C. 레일 AK 1
D. AK 유니트 1
E. 좌측 뒷 받침대 1
F. 좌측 커버 1
G. 전면 커버 1
H. 좌측 상커버 1
I. 좌측 전면 커버 1
J. 연결 하커버 1
K. 나사 M4×8 3
L. 나사 M4×14 4

(M) 는 동봉되어 있지 않습니다 .
동봉품에 고정 테이프 , 완충재가 붙어 있는 경우에는 반드시 제거할 것 .

日本語

同梱品

A. 左後ステー 1
B. スキャナー左カバー 1
C. レール AK 1
D. AK ユニット 1
E. 左前ステー 1
F. 左カバー 1
G. 前カバー 1
H. 左上カバー 1
I. 左前カバー 1
J. 連結下カバー 1
K. ビス M4×8 3
L. ビス M4×14 4
M. ラベル 1

同梱品に固定テープ、緩衝材がついている場合は、必ず取り外すこと。

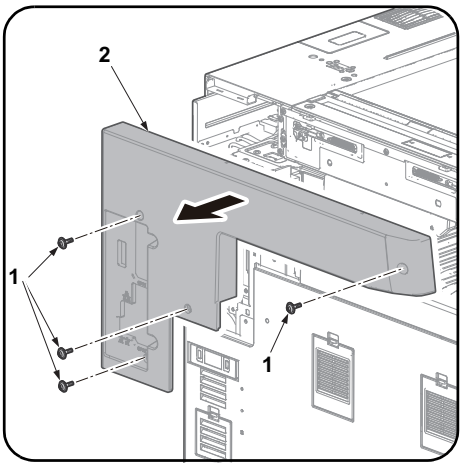

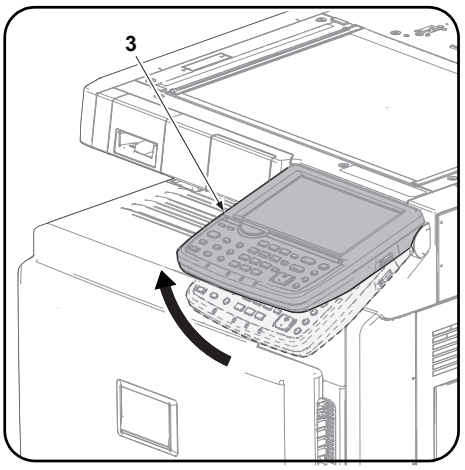

Before starting installation, be sure to turn the main power switch of the machine off, and unplug the power plug from the wall outlet.

Procedure

1. Remove the four screws (1). Remove the left upper cover(2) .

2. If the operation panel (3) is lowered, raise it to the top position.

Avant de commencer l'installation, s'assurer de mettre la machine hors tension et de débrancher la fiche d'alimentation de la prise murale.

Procédure

1. Retirez les quatre vis (1). Retirer le capot supérieur gauche (2).

2. Si le panneau de commande (3) est abaissé, le relever dans sa position maximum.

Antes de iniciar la instalación, asegúrese de apagar el interruptor de encendido de la máquina y desenchufar el cable de alimentación de la toma de pared.

Procedimiento

1. Quite los cuatro tornillos (1). Quite la cubierta superior izquierda (2).

2. Si el panel de trabajo (3) está bajo, levántelo hasta la posición superior.

Bevor Sie mit der Installation beginnen überzeugen Sie sich, dass der Netzschalter des Geräts ausgeschaltet und das Stromkabel aus der Steckdose gezogen ist.

Verfahren

1. Entfernen Sie die vier Schrauben (1). Entfernen Sie die linke obere Abdeckung (2).

2. Heben Sie das Bedienfeld (3) in die oberste Position, falls es gesenkt ist.

Prima di iniziare l'installazione, spegnere la macchina e scollegare la spina dalla presa di corrente.

Procedura

1. Togliere le quattro viti (1). Rimuovere il coperchio superiore sinistro (2).

2. Se il pannello operativo (3) è abbassato, sollevarlo alla posizione in alto.

安装前务必关闭机器的主电源开关，并从墙壁插座拔下电源插头。。

安装步骤

1. 取下 4 颗螺丝（1）。取下左上盖板（2）。

2. 操作面板 (3) 处于低位时，将其升到最高位置。

설치를 시작하기 전에 반드시 본체의 주 전원 스위치를 끄고 벽 콘센트에서 전원 플러그를 분리하십시오 .

설치순서

1. 나사 (1) 4 개를 제거합니다 . 좌측 상커버 (2) 를 제거합니다 .

2. 조작판넬 (3) 이 내려가 있는 경우에는 위로 올립니다 .

必ず機械本体の主電源スイッチを OFF にし、機械本体の電源プラグを抜いてから作業すること。

取付手順

1. ビス (1)4 本を外す。左上カバー(2) を取り外す。

2. 操作パネル (3) が下がっている場合は上位置に上げる。

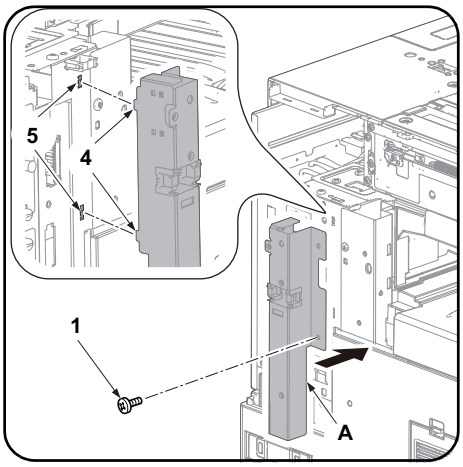

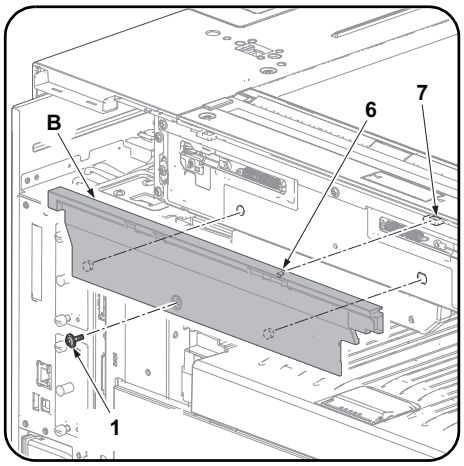

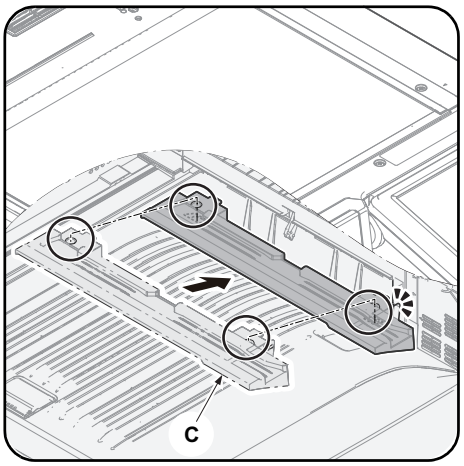

3. Insert the two projections(4) on the left rear stay(A) into the holes(5) in the frame.Secure the left rear stay(A) with the screw(1) removed in step 1.

4. Insert the hook(6) on the left cover of the scanner(B) into the hole(7) in the frame.Secure the left cover(B) of the scanner with the screw(1) removed in step 1.

5. Align the projection of the rail AK(C) with the hole of the tray cover.
(Fit it until it clicks into place.)

---

3. Introduire les deux ergots (4) du support arrière gauche (A) dans les trous (5) du cadre. Fixer le support arrière gauche (A) avec la vis (1) retirée à l'étape 1.

4. Introduire le crochet (6) sur le capot gauche du scanner (B) dans le trou (7) du cadre. Fixer le capot gauche (B) du scanner avec la vis (1) retirée à l'étape 1.

5. Aligner l'ergot du rail AK (C) avec le trou du capot de bac.
(Un déclic indique que la pièce est en position.)

---

3. Inserte las dos proyecciones (4) de la estancia izquierda posterior (A) en los orificios (5) del marco.Fije la estancia izquierda posterior (A) con el tornillo (1) que quitó en el paso 1.

4. Inserte el enganche (6) de la cubierta izquierda del escáner (B) en el orificio (7) del marco.Fije la cubierta izquierda (B) del escáner con el tornillo (1) que quitó en el paso 1.

5. Alinee la proyección del AK del raíl (C) con el orificio de la cubierta de la bandeja.
(Ajústela hasta que escuche un clic de posicionamiento.)

---

3. Setzen Sie die beiden Nasen (4) des linken hinteren Anschlags (A) in die Öffnungen (5) der seitlichen Platte.Befestigen Sie den linken hinteren Anschlag (A). Benutzen Sie die Schraube (1) aus Schritt 1.

4. Setzen Sie die Haken (6) der linken Scanner-Abdeckung (B) in die Öffnung (7) der seitlichen Platte.Befestigen Sie die linke Scanner-Abdeckung (B). Benutzen Sie die Schraube (1) aus Schritt 1.

5. Richten Sie die Nase der AK Schiene (C) mit den Öffnungen der Abdeckung der Ablage aus.
(Bewegen Sie es so lange, bis es in der richtigen Position einrastet.)

---

3. Inserire le due sporgenze (4) sul tirante posteriore sinistro (A) nei fori (5) sul telaio.Fissare il tirante posteriore sinistro (A) con la vite (1) rimossa al punto 1.

4. Inserire il gancio (6) presente sul coperchio sinistro dello scanner (B) nel foro (7) sul telaio.Fissare il coperchio sinistro (B) dello scanner con la vite (1) rimossa al punto 1.

5. Allineare la sporgenza del binario AK (C) al foro del coperchio vassoio.
(Inserire fino a sentire il clic di blocco in posizione.)

---

3. 把左后部支架（A）的 2 处突起部（4）插入侧板的孔（5）中。使用步骤 1 中取下的 1 颗螺丝（1）来固定左后部支架（A）。

4. 把扫描仪左盖板（B）的挂钩（6）插入侧板的孔（7）中。使用步骤 1 中取下的 1 颗螺丝（1）来固定扫描仪左盖板（B）。

5. 使导轨 AK（C）的凸起部和托盘盖板的凹处对齐后安装。
（插入，直至其卡入到位）

---

3. 좌측 뒷 받침대 (A) 에 있는 2 개의 돌기 (4) 를 프레임의 구멍 (5) 에 삽입합니다 . 순서 1 에서 제거한 나사 (1) 로 좌측 뒷 받침대 (A) 를 고정합니다 .

4. 스캐너좌측 커버 (B) 에 있는 후크 (6) 를 프레임의 구멍 (7) 에 삽입합니다 . 순서 1 에서 제거한 나사 (1) 로 스캐너좌측 커버 (B) 를 고정합니다 .

5. 레일 AK(C) 의 돌출부를 트레이 커버의 구멍에 맞춥니다 .
(찰칵 소리가 나서 제자리에 장착될 때까지 삽입합니다 .)

---

3. 左後ステー(A) の 2 個の突起 (4) を側板の穴 (5) に入れる。手順 1 で外したビス (1)1 本で左後ステー(A) を固定する。

4. スキャナー左カバー(B) のフック (6) を側板の穴 (7) に入れる。手順 1 で外したビス (1)1 本でスキャナー左カバー(B) を固定する。

5. レール AK(C) の凸部と、トレイカバーの凹部を、あわせて取り付ける。
(カチッと音がするまで挿入する)

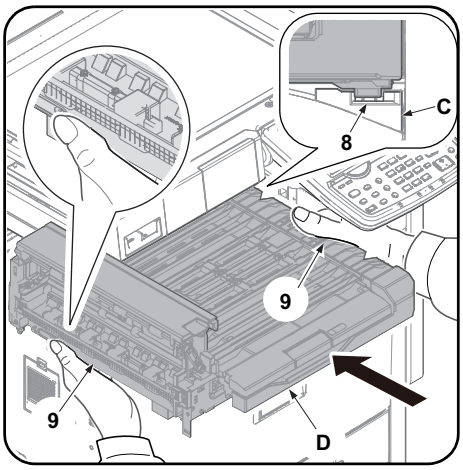

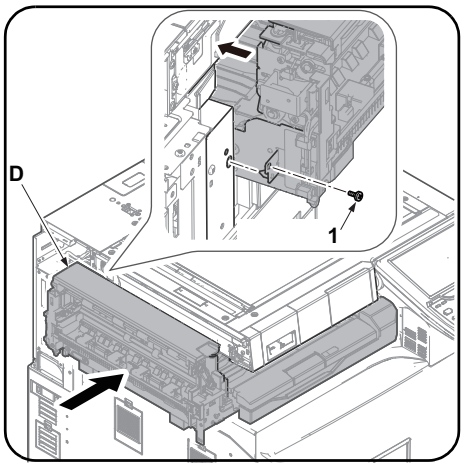

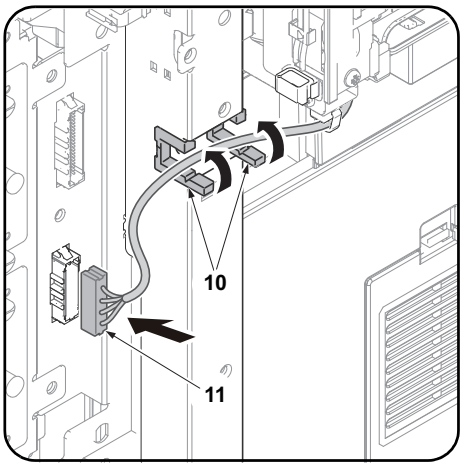

6. Align the AK unit(D) with the groove(8) of the rail AK(C).Push it from the front of machine as far as it will go.
*Both ends(9) of the AK unit(D) should be lifted.

7. Slide the AK unit(D) to the right.
8. Secure the AK unit(D) with the screw(1) removed in step 1.

9. Run the cable from the AK unit(D) through the two edgings(10).Plug the connector(11) into the machine.

---

6. Aligner l'unité AK (D) avec la rainure (8) du rail AK (C).Pousser à fond depuis l'avant de la machine.
*Les deux extrémités (9) de l'unité AK (D) doivent être soulevées.

7. Faire glisser l'unité AK (D) vers la droite.
8. Fixer l'unité AK (D) avec la vis (1) retirée à l'étape 1.

9. Faire passer le câble depuis l'unité AK (D) à travers les deux bords (10).Brancher le connecteur (11) dans la machine.

---

6. Alinee la unidad AK (D) con la ranura (8) del AK del raíl (C).Empújela desde la parte frontal de la máquina hasta el máximo.
*Ambos extremos (9) de la unidad AK (D) se deben levantar.

7. Deslice la unidad AK (D) a la derecha.
8. Con el tornillo (1) que quitó en el paso 1, fije la unidad AK (D).

9. Pase el cable de la unidad AK (D) a través de los dos bordes (10).Enchufe el conector (11) a la máquina.

---

6. Richten Sie die AK Baugruppe (D) mit der Nut (8) der AK Schiene (C) aus.Drücken Sie sie von der Vorderseite des Geräts so weit es geht hinein.
*Beide Enden (9) der AK Baugruppe (D) sollten angehoben werden.

7. Schwenken Sie die AK Baugruppe (D) nach rechts.
8. Befestigen Sie die AK Baugruppe (D). Benutzen Sie die Schraube (1) aus Schritt 1.

9. Legen Sie die Kabel der AK Baugruppe (D) durch die beiden Einfassungen (10). Stecken Sie den Stecker (11) ins Gerät.

---

6. Allineare l'unità AK (D) alla scanalatura (8) del binario AK (C).Dal fronte della macchina, spingere per inserire a fondo.
*Entrambe le unità (9) dell'unità AK (D) devono essere sollevate.

7. Inserire l'unità AK (D) sulla destra.
8. Fissare l'unità AK (D) con la vite (1) rimossa al punto 1.

9. Tirare il cavo dall'unità AK (D) attraverso i due spigoli (10).Collegare il connettore (11) sulla macchina.

---

6. 使 AK 组件（D）和导轨 AK（C）的沟槽（8）对齐。从机器前侧向内侧插入到底。
※ 必须拿在 AK 组件（D）的两端（9）。

7. 使 AK 组件（D）向右侧滑动。
8. 使用步骤 1 中取下的 1 颗螺丝（1）来固定 AK 组件（D）。

9. 使 AK 组件（D）的电线穿过 2 处束线夹（10）。把接插件（11）连接到机器本体。

---

6. AK 유니트 (D) 를 레일 AK(C) 의 홈 (8) 에 맞춥니다 . 본체 전면에서 가능한 한 멀리 밀어 넣습니다 .
※ AK 유니트 (D) 의 양 끝 (9) 을 들어 올려야 합니다 .

7. AK 유니트 (D) 를 오른쪽으로 밉니다 .
8. 순서 1 에서 제거한 나사 (1) 로 AK 유니트 (D) 를 고정합니다 .

9. AK 유니트 (D) 의 전선을 2 가장자리 (10) 를 통과하도록 합니다 . 커넥터 (11) 를 본체에 연결합니다 .

---

6. AK ユニット (D) を、レール AK(C) の溝 (8) にあわせる。機械前側から奥まで挿入する。
※AK ユニット (D) は、必ず両端部 (9) を持つこと。

7. AK ユニット (D) を、右側にスライドさせる。
8. 手順 1 で外したビス (1)1 本で AK ユニット (D) を固定する。

9. AK ユニット (D) の電線を、2 箇所のエッジング (10) に通す。コネクター(11) を機械本体に接続する。

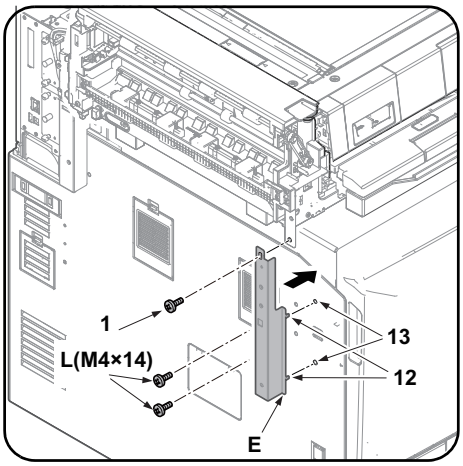

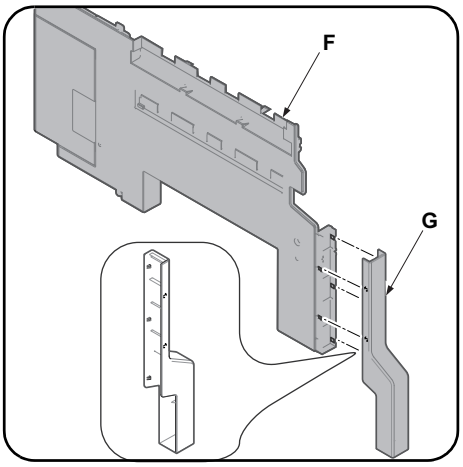

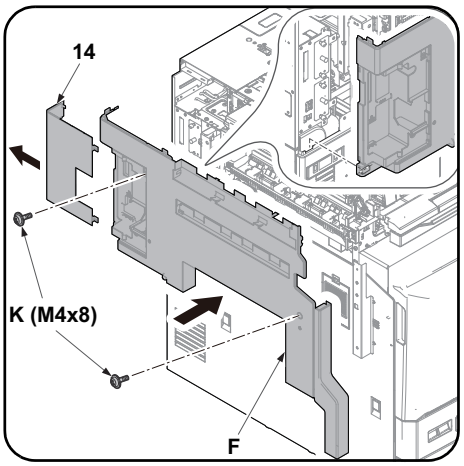

10. Insert the two projections(12) on the left front stay(E) into the holes(13) of the left cover in the machine.Secure the left front stay(E) using the two screws M4×14(L) and the screw(1) removed in step 1.

11. Attach the front cover(G) to the left cover(F).

12. Remove the interface cover (14).
* After installing the document finisher, re-attach the interface cover (14).

13. Install the left cover(F) using the two screws M4x8(K) .

---

10. Introduire les deux ergots (12) du support avant gauche (E) dans les trous (13) du capot gauche de la machine.Fixer le support avant gauche (E) à l'aide des deux vis M4×14 (L) et de la vis (1) retirée à l'étape 1

11. Installer le capot avant (G) sur le capot gauche (F).

12. Déposer le Capot d'interface (14).
* Après avoir installé le retoucheur de document, reposer le Capot d'interface (14).

13. Installer le capot gauche (F) à l'aide des deux vis M4x8 (K).

---

10. Inserte las dos proyecciones (12) de la estancia izquierda frontal (E) en los orificios (13) de la cubierta izquierda de la máquina. Fije la estancia frontal izquierda (E) con los dos tornillos M4×14 (L) con el tornillo (1) que quitó en el paso 1.

11. Conecte la cubierta frontal (G) a la cubierta izquierda (F).

12. Quite la cubierta de la interfaz (14).
* Después de instalar el finalizador de documentos, vuelva a colocar la cubierta de la interfaz (14).

13. Instale la cubierta izquierda (F) con los dos tornillos M4x8 (K).

---

10. Setzen Sie die beiden Nasen (12) des linken vorderen Anschlags (E) in die Öffnungen (13) der linken Abdeckung ins Gerät ein.Befestigen Sie den linken vorderen Anschlag (E). Benutzen Sie die zwei Schrauben M4×14 (L) und die Schraube (1) aus Schritt 1.

11. Befestigen Sie die vordere Abdeckung (G) an der linken Abdeckung (F).

12. Entfernen Sie die Schnittstellenabdeckung (14).
* Bringen Sie nach der Installation des Dokument-Finishers wieder die Schnittstellenabdeckung (14) an.

13. Installieren Sie die linke Abdeckung (F) mit den beiden Schrauben M4x8 (K).

---

10. Inserire le due sporgenze (12) del tirante frontale sinistro (E) nei fori (13) del coperchio sinistro sulla macchina.Fissare il tirante frontale sinistro (E) con le due viti M4×14 (L) e la vite (1) rimossa al punto 1.

11. Montare il coperchio frontale (G) sul coperchio sinistro (F).

12. Rimuovere il coperchio interfaccia (14).
* Dopo l'installazione della finitrice di documenti, fissare di nuovo il coperchio interfaccia (14).

13. Installare il coperchio sinistro (F) utilizzando le due viti M4x8 (K).

---

10. 把左前部支架（E）的 2 处突起部（12）插入机器本体的左盖板的孔（13）中。使用 2 颗螺丝 M4×14(L) 和步骤 1 中取下的 1 颗螺丝（1）来固定左前部支架（E）。

11. 把前盖板（G）安装到左盖板（F）上。

12. 拆下接口盖板（14）。
※ 在装订器设置完成后，按原样安装接口盖板（14）。

13. 使用 2 颗螺丝 M4×8(K) 来安装左盖板（F）。

---

10. 좌측 전면 받침대 (E) 의 두 돌기 (12) 를 본체의 좌측 커버의 구멍 (13) 에 삽입합니다 . 나사 M4 × 14 (L) 2 개와 순서 1 에서 제거한 나사 (1) 를 사용하여 좌측 전면 받침대 (E) 를 고정합니다 .

11. 전면 커버 (G) 를 좌측 커버 (F) 에 부착합니다 .

12. 인터페이스 커버 (14) 를 제거합니다 .
※ 인터페이스 커버 (14) 는 문서 피니셔 설치 후에 원래대로 장착합니다 .

13. 나사 M4x8 (K) 2 개를 사용하여 좌측 커버 (F) 를 장착합니다 .

---

10. 左前ステー(E) の 2 箇所の突起 (12) を機械本体の左カバーの穴 (13) に入れる。ビス M4×14(L) 2 本と手順 1 で外したビス (1)1 本で左前ステー(E) を固定する。

11. 左カバー(F) に前カバー(G) を取り付ける。

12. インターフェイスカバー(14) を取り外す。
※ インターフェイスカバー(14) はドキュメントフィニッシャー設置後に、元通り取り付ける。

13. ビス M4×8(K)2 本で左カバー(F) を取り付ける。

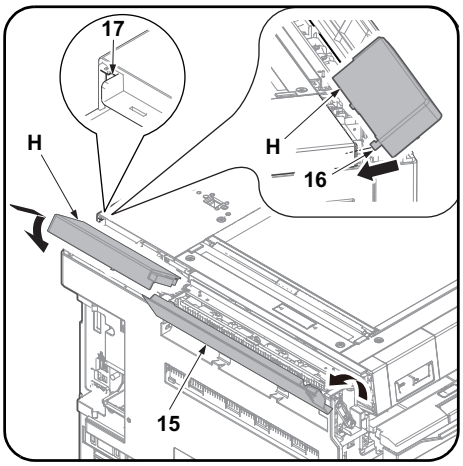

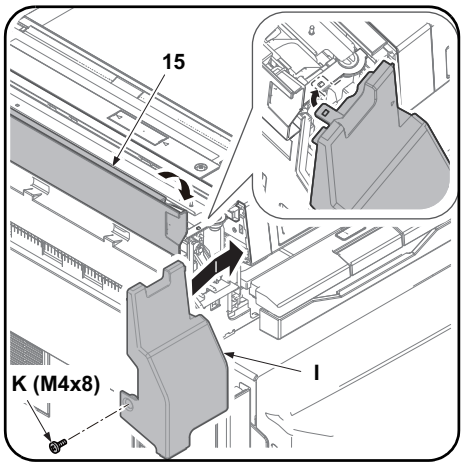

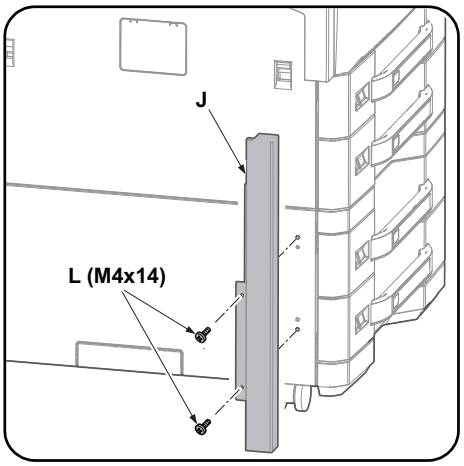

14. Open the eject cover(15).
15. Insert the hook(16) of the left top cover(H) into the notched section(17) of the cover in the machine.

16. Attach the left front cover(I).Secure it using the screw M4 x 8 (K).
17. Close the eject cover(15).

18. Attach the lower connection cover (J) with the 2 M4 × 14 screws (L).

---

14. Ouvrir le capot de sortie (15).
15. Introduire le crochet (16) du capot supérieur gauche (H) dans la section à encoche (17) du capot de la machine.

16. Installer le capot avant gauche (I).Le fixer avec la vis M4x8 (K).
17. Fermer le capot de sortie (15).

18. Fixer le Capot de connexion inférieur (J) à l'aide de 2 vis M4 × 14 (L).

---

14. Abra la cubierta de salida (15).
15. Inserte el enganche (16) de la cubierta superior izquierda (H) en la sección con muescas (17) de la cubierta de la máquina.

16. Conecte la cubierta frontal izquierda (I). Fíjela con el tornillo M4x8 (K).
17. Cierre la cubierta de salida (15).

18. Fije la cubierta de conexiones inferior (J) con los 2 tornillos M4 × 14 (L).

---

14. Öffnen Sie die Abdeckung des Ausgabefachs (15).
15. Richten Sie den Haken (16) der oberen linken Abdeckung (H) mit den Einkerbungen (17) der Abdeckung des Geräts aus.

16. Befestigen Sie die linke vordere Abdeckung (I).Befestigen Sie sie mit der Schraube M4x8 (K).
17. Schließen Sie die Abdeckung des Ausgabefachs (15).

18. Bringen Sie die untere Verbindungsabdeckung (J) mit den 2 M4 × 14 Schrauben (L) an.

---

14. Aprire il coperchio di uscita (15).
15. Inserire il gancio (16) del coperchio superiore sinistro (H) nella sezione con incavo (17) del coperchio sulla macchina.

16. Montare il coperchio frontale sinistro (I).Fissarlo utilizzando la vite M4x8 (K).
17. Chiudere il coperchio di uscita (15).

18. Fissare il coperchio connessione inferiore (J) con le 2 viti M4 × 14 (L).

---

14. 打开排纸盖板（15）。
15. 使左上盖板（H）的 1 处挂钩（16）插入盖板的缺口部（17）后，再安装。

16. 安装左前盖板（I）。使用螺丝 M4×8(K) 来固定。
17. 关闭排纸盖板（15）。

18. 使用 2 颗 M4×14 螺丝 (L) 来安装连接下盖板 (J)。

---

14. 배출 커버 (15) 를 엽니다 .
15. 좌측 상단 커버 (H) 의 후크 (16) 를 본체 안에 있는 커버의 홈 부분 (17) 에 삽입합니다 .

16. 좌측 전면 커버 (I) 를 장착합니다 . 나사 M4 x 8 (K) 를 사용하여 고정합니다 .
17. 배출 커버 (15) 를 닫습니다 .

18. 나사 M4×14(L) 2 개로 연결 하커버 (J) 를 장착합니다 .

---

14. 排出カバー(15) を開く。
15. 左上カバー(H) のフック (16)1 箇所をカバーの切り欠き部 (17) に入れて、取り付ける。

16. 左前カバー(I) を取り付ける。
ビス M4×8(K)1 本 1 本で固定する。
17. 排出カバー(15) を閉じる。

18. ビス M4×14(L)2 本で連結下カバー(J) を取り付ける。

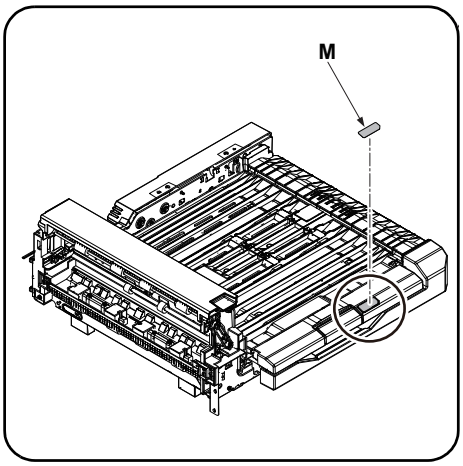

19. Wipe the label surface shown in the figure with alcohol and adhere the label (M) of the corresponding language.

---

19. Essuyer avec de l'alcool la surface pour l'étiquette montrée sur l'illustration, et apposer l'étiquette (M) de la langue correspondante.

---

19. Limpie la superficie de la etiqueta mostrada en la ilustración con alcohol y pegue la etiqueta (M) del idioma correspondiente.

---

19. Reinigen Sie die in der Abbildung gezeigte Klebefläche des Aufklebers mit Alkohol und bringen den Aufkleber (M) der entsprechenden Sprache an.

---

19. Pulire con alcol la superficie dell'etichetta indicata nella figura e applicare l'etichetta (M) della lingua corrispondente.

---

19. 不需要本步驟。

---

19. 이 단계가 필요하지 않습니다 .

---

19. イラストの位置のラベル上面をアルコール清掃後、該当する言語のラベル (M) を貼り付ける。

MEMO

303P05671003

2013. 1
303P056710-03

INSTALLATION GUIDE FOR CENTER-FOLDING UNIT

INSTALLATION GUIDE

GUIDE D’INSTALLATION

GUÍA DE INSTALACION

INSTALLATIONSANLEITUNG

GUIDA ALL’INSTALLAZIONE

安装手册

설치안내서

設置手順書

BF-730

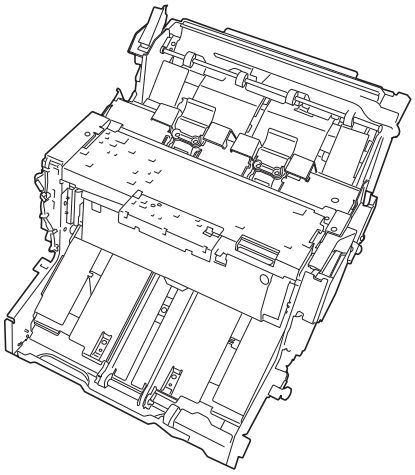

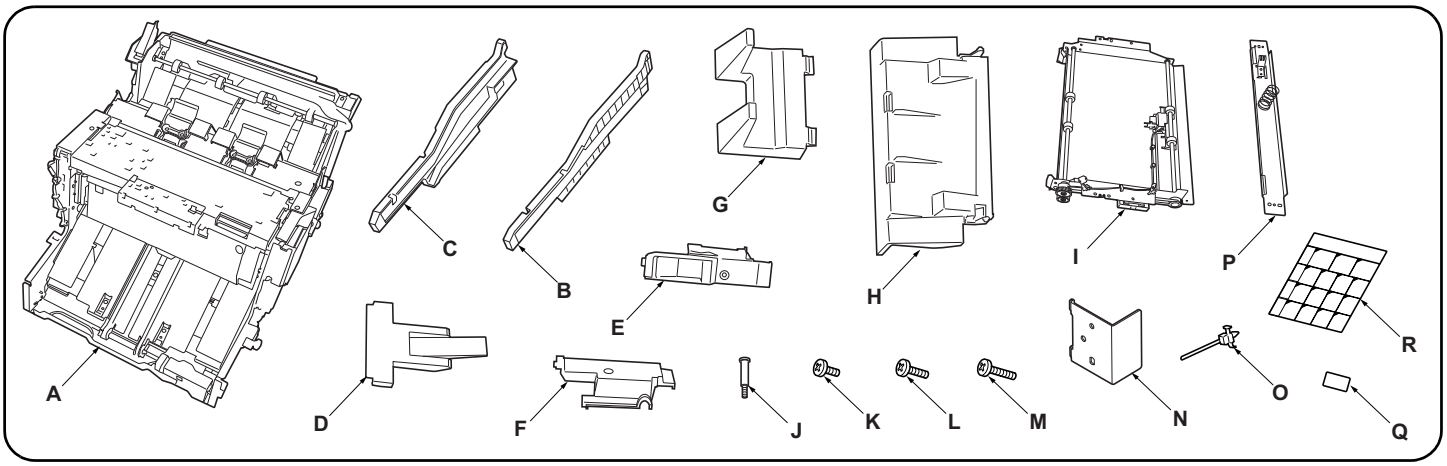

English

Supplied parts

A. Center-Folding unit 1
B. Front rail 1
C. Rear rail 1
D. Output stopper 1
E. Front side cover 1
F. Rear side cover 1
G. Output stock tray 1
H. Output tray 1
I. Relay paper conveying unit 1
J. Pin 1
K. M4 × 8 screw 11
L. M4 × 10 screw (black) 2
M. M4 × 12 screw 4
N. Lock plate 2
O. Binding band 1
P. Guide 1
Q. D7 label 1
R. Operation label 1

Français

Pièces fournies

A. Plieuse 1
B. Glissière avant 1
C. Glissière arrière 1
D. Butée de sortie 1
E. Capot latéral avant 1
F. Capot latéral arrière 1
G. Plateau de sortie du papier 1
H. Plateau de sortie 1
I. Unité de transport du papier de relais 1
J. Goupille 1
K. Vis M4 × 8 11
L. Vis M4 × 10 (noire) 2
M. Vis M4 × 12 4
N. Plaque de verrouillage 2
O. Collier de fixation 1
P. Guide 1
Q. Étiquette D7 1
R. Étiquette de fonctionnement 1

Español

Partes suministradas

A. Unidad de plegado 1
B. Carril frontal 1
C. Carril posterior 1
D. Tope de salida 1
E. Cubierta lateral frontal 1
F. Cubierta lateral posterior 1
G. Bandeja de recolección de papel de salida 1
H. Bandeja de salida 1
I. Unidad de transporte de papel por relevador 1
J. Pasador 1
K. Tornillo M4 × 8 11
L. Tornillo M4 × 10 (negro) 2
M. Tornillo M4 × 12 4
N. Placa de cierre 2
O. Correa de sujeción 1
P. Guía 1
Q. Etiqueta D7 1
R. Etiqueta de funcionamiento 1

Deutsch

Gelieferte Teile

A. Mittenfalteinheit 1
B. Vordere Schiene 1
C. Hintere Schiene 1
D. Ausgabeanschlag 1
E. Vordere Seitenabdeckung 1
F. Hintere Seitenabdeckung 1
G. Ausgabestapelfach 1
H. Ausgabefach 1
I. Eingesetzte Papierfördereinheit 1
J. Stift 1
K. M4 × 8 Schraube 11
L. M4 × 10 Schraube (schwarz) 2
M. M4 × 12 Schraube 4
N. Sperrplatte 2
O. Schellenband 1
P. Führung 1
Q. D7 Aufkleber 1
R. Bedienungsaufkleber 1

Italiano

Parti di fornitura

A. Unità di piegatura centrale 1
B. Rotaia anteriore 1
C. Rotaia posteriore 1
D. Fermo di uscita 1
E. Coperchio laterale anteriore 1
F. Coperchio laterale posteriore 1
G. Vassoio di uscita stoccaggio 1
H. Vassoio di uscita 1
I. Unità relay di trasporto carta 1
J. Perno 1
K. Vite M4 × 8 11
L. Vite M4 × 10 (nera) 2
M. Vite M4 × 12 4
N. Piastra di bloccaggio 2
O. Fascetta di legatura 1
P. Guida 1
Q. Etichetta D7 1
R. Etichetta di operazione 1

简体中文

附属品

A. 中缝装订一折页单元 1
B. 前部导轨 1
C. 后部导轨 1
D. 排纸挡板 1
E. 前部侧盖板 1
F. 后部侧盖板 1
G. 堆纸托盘 1
H. 排纸托盘 1
I. 中间搬运单元 1
J. 销钉 1
K. M4×8 螺丝 11
L. M4×10 螺丝（黑） 2
M. M4×12 螺丝 4
N. 锁定板 2
O. 束线带 1
P. 导板 1
Q. D7 标签 1
R. 操作标签 1

한국어

동봉품

A. 접기 유니트 1
B. 레일 앞 1
C. 레일 뒤 1
D. 배지 스토퍼 1
E. 사이드 커버 앞 1
F. 사이드 커버 뒤 1
G. 배지 저장트레이 1
H. 배지 트레이 1
I. 중계 반송유니트 1
J. 핀 1
K. 나사 M4×8 11
L. 나사 M4×10 (흑) 2
M. 나사 M4×12 4
N. 잠금 플레이트 2
O. 결속 밴드 1
P. 가이드 1
Q. D7 라벨 1
R. 조작라벨 1

日本語

同梱品

A. 中折りユニット 1
B. レール前 1
C. レール後 1
D. 排紙ストッパー 1
E. サイドカバー前 1
F. サイドカバー後 1
G. 排紙ストックトレイ 1
H. 排紙トレイ 1
I. 中継搬送ユニット 1
J. ピン 1
K. ビス M4×8 11
L. ビス M4×10(黒) 2
M. ビス M4×12 4
N. ロックプレート 2
O. 結束バンド 1
P. ガイド 1
Q. D7 ラベル 1
R. 操作ラベル 1

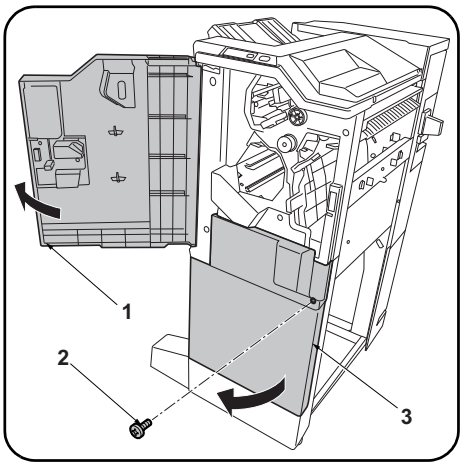

Be sure to remove any tape and/or cushioning material from supplied parts.

Procedure
Before installing the center-folding unit, turn the MFP's main power switch off and unplug the power cable from the power supply.
Install the document finisher, and then install the center-folding unit.

1. Open the upper front cover (1) of the document finisher.
2. Remove the screw (2) and open the lower front cover (3).
(NOTICE)
Discard the screw (2) and do not fasten the lower front cover (3).

Veillez à retirer les morceaux de bande adhésive et/ou les matériaux de rembourrage des pièces fournies.

Procédure
Avant d'installer la plieuse mettre l'interrupteur d'alimentation principal du MFP hors tension et débrancher le câble d'alimentation de la prise de courant.
Installer le finisseur de document, puis installer la plieuse.

1. Ouvrir le couvercle avant supérieur (1) du retoucheur de document.
2. Déposer la vis (2) et ouvrir le couvercle avant inférieur (3).
(AVIS)
Jeter la vis (2) et ne pas fixer le capot inférieur avant (3).

Asegúrese de despegar todas las cintas y/o material amortiguador de las partes suministradas.

Procedimiento
Antes de instalar la unidad de plegado, desconecte el interruptor de alimentación principal de la MFP y desenchufe el cable de alimentación de la toma de corriente.
Instale primero el finalizador de documentos y luego instale la unidad de plegado.

1. Abra la cubierta frontal superior (1) del finalizador de documentos.
2. Quite el tornillo (2) y abra la cubierta frontal inferior (3).
(AVISO)
Descarte el tornillo (2) y no ajuste la cubierta frontal inferior (3).

Entfernen Sie Klebeband und/oder Dämpfungsmaterial vollständig von den mitgelieferten Teilen.

Verfahren
Bevor Sie mit dem Einbau der Mittenfalteinheit beginnen, stellen Sie sicher, dass der Hauptschalter des Kopierers ausgeschaltet und das Netzkabel aus der Steckdose gezogen ist.
Bringen Sie den Dokument-Finisher zuerst und dann erst die Mittenfalteinheit an.

1. Öffnen Sie die obere vordere Abdeckung (1) des Dokument-Finishers.
2. Entfernen Sie die Schraube (2) und öffnen Sie die untere vordere Abdeckung (3).
(HINWEIS)
Entsorgen Sie die Schraube (2) und befestigen Sie nicht die untere vordere Abdeckung (3).

Accertarsi di rimuovere tutti i nastri adesivi e/o il materiale di imbottitura dalle parti fornite.

Procedura
Prima di installare l'unità di piegatura centrale, assicurarsi che l'interruttore principale della fotocopiatrice sia spento e che il cavo di alimentazione non sia inserito nella presa.
Installare prima la finitrice e poi procedere all'installazione dell'unità di piegatura centrale.

1. Aprire il coperchio superiore anteriore (1) della finitrice di documenti.
2. Rimuovere la vite (2) ed aprire il coperchio inferiore anteriore (3).
(NOTIFICA)
Eliminare le viti (2) e non fissare il coperchio inferiore anteriore (3).

如果附属品上带有固定胶带，缓冲材料时务必揭下。

安装步骤
安装中缝装订 — 折页单元前，请关闭 MFP 的主电源开关并从电源拔下电源线。
安装装订器，然后安装中缝装订 — 折页单元。

1. 打开装订器的前部上盖板（1）。
2. 拆除 1 颗螺丝（2），打开前部下盖板（3）。
（注意）
废除螺丝（2），前部下盖板（3）不需固定。

동봉품에 고정 테이프 , 완충재가 붙어 있는 경우에는 반드시 제거할 것 .

장착순서
중철 유니트를 설치할 때에는 반드시 MFP 본체의 주전원 스위치를 OFF 로 하고 전원플러그를 뺀 후 작업을 할 것 .
문서 피니셔를 설치 후 , 중철 유니트를 설치 할 것 .

1. 문서 피니셔 앞 상커버 (1) 를 엽니다 .
2. 나사 (2) 1 개를 제거하고 앞 하커버 (3) 를 엽니다 .
(주의)
나사 (2) 는 폐기하고 전면 아래커버 (3) 는 고정하지 않습니다 .

同梱品に固定テープ、緩衝材がついている場合は、必ず取り外すこと。

取付手順
中折りユニットを設置するときは、必ず MFP 本体の主電源スイッチを OFF にし、電源プラグを抜いてから作業すること。
ドキュメントフィニッシャーを設置後、中折りユニットを設置すること。

1. ドキュメントフィニッシャーの前上カバー (1) を開く。
2. ビス (2) 1 本を外し、前下カバー (3) を開く。
（注意）
ビス (2) は廃棄とし、前下カバー (3) は固定しない。

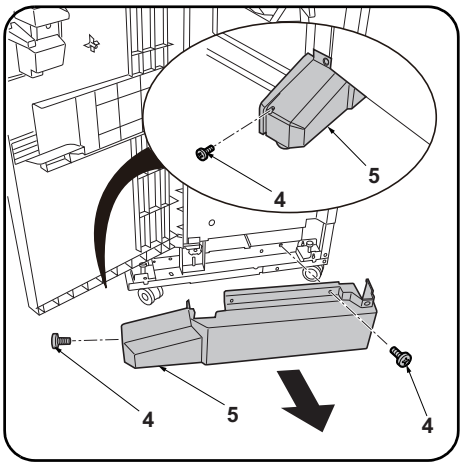

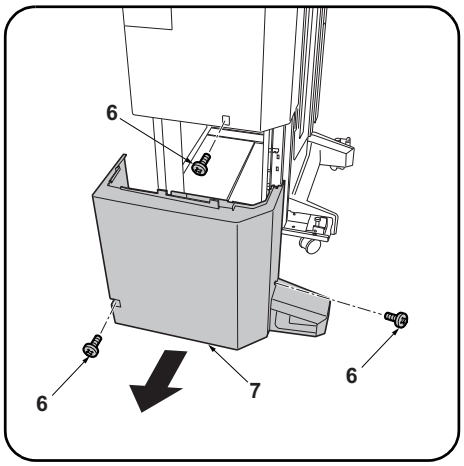

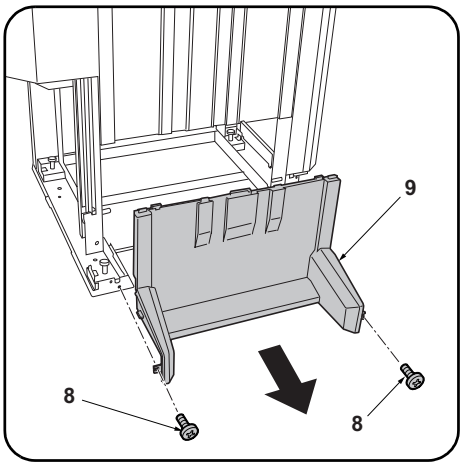

3. Remove the 2 screws (4) and remove the foot cover (5).

4. Remove the 3 screws (6) and remove the lower rear cover (7).

5. Remove 2 screws (8) and remove the lower middle cover (9).

---

3. Déposer les 2 vis (4) puis le couvercle du pied (5).

4. Déposer les 3 vis (6) puis le couvercle arrière inférieur (7).

5. Déposer les 2 vis (8) et le couvercle intermédiaire inférieur (9).

---

3. Quite los 2 tornillos (4) y quite la cubierta de la pata (5).

4. Quite los 3 tornillos (6) y quite la cubierta posterior inferior (7).

5. Quite los 2 tornillos (8) y quite la cubierta intermedia inferior (9).

---

3. Entfernen Sie die 2 Schrauben (4) und nehmen Sie die Fußabdeckung (5) ab.

4. Entfernen Sie die 3 Schrauben (6) und nehmen Sie die untere hintere Abdeckung (7) ab.

5. Entfernen Sie die 2 Schrauben (8) und nehmen Sie die untere mittlere Abdeckung (9) ab.

---

3. Rimuovere le 2 viti (4) e quindi rimuovere la copertura del piede (5).

4. Rimuovere le 3 viti (6) e quindi rimuovere il coperchio inferiore posteriore (7).

5. Rimuovere le 2 viti (8) e quindi rimuovere il pannello centrale inferiore (9).

---

3. 拆除 2 颗螺丝（4），拆下脚座盖板（5）。

4. 拆除 3 颗螺丝（6），拆下后部下盖板（7）。

5. 拆除 2 颗螺钉 (8)，拆下中部下盖板 (9)。

---

3. 나사 (4) 2 개를 제거하고 , 풋커버 (5) 를 제거합니다 .

4. 나사 (6) 3 개를 제거하고 , 뒤 하커버 (7) 를 제거합니다 .

5. 나사 (8) 2 개를 제거하고 중하 커버 (9) 를 떼어 냅니다 .

---

3. ビス (4)2 本を外し、フットカバー(5) を取り外す。

4. ビス (6)3 本を外し、後下カバー(7) を取り外す。

5. ビス (8)2 本を外し、中下カバー(9) を取り外す。

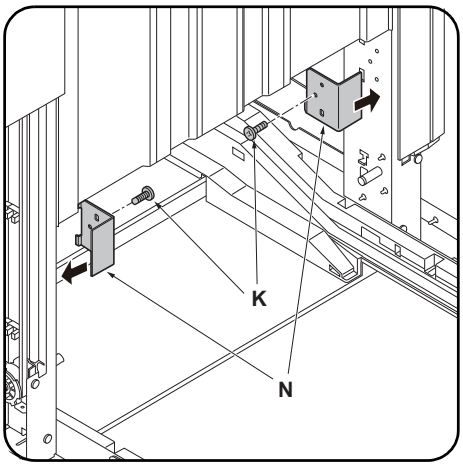

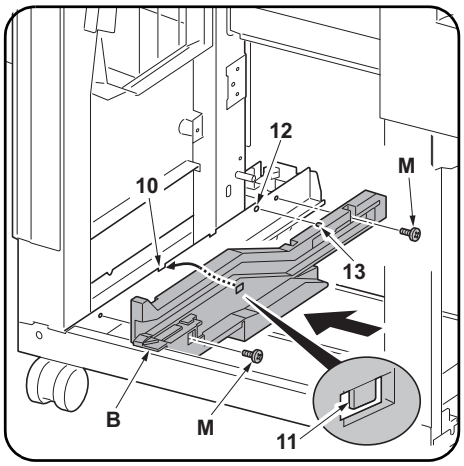

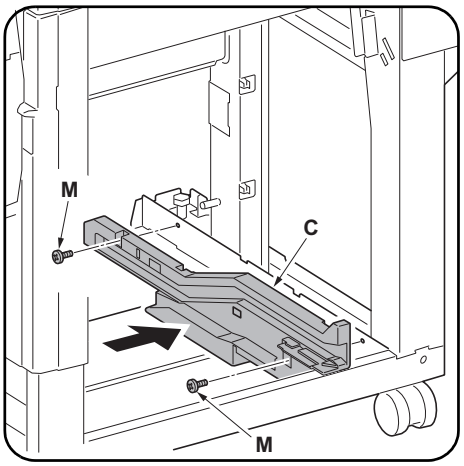

6. Install the lock plates (N) on the front and rear supports using an M4 × 8 screw (K) each.

7. Place the hook (11) of the front rail (B) on the notch (10) at the front of the document finisher, at the same time inserting the projection (13) on the front rail (B) in the hole (12) in the document finisher.
8. Fix the front rail (B) using 2 M4 × 12 screws (M).

9. Install the rear rail (C) at the rear of the document finisher using 2 M4 × 12 screws (M) in the same way.

---

6. Monter les plaques de verrouillage (N) sur les supports avant et arrière en procédant à l'aide d'une vis M4 × 8 (K) dans les deux cas.

7. Placer le crochet (11) de la glissière avant (B) dans l'encoche (10) à l'avant du retoucheur de document tout en insérant la saillie (13) de la glisière avant (B) dans le trou (12) du retoucheur de document.
8. Fixer la glissière avant (B) à l'aide de 2 vis M4 × 12 (M).

9. Monter la glissière arrière (C) au dos du retoucheur de document en procédant de la même façon et à l'aide de 2 vis M4 × 12 (M).

---

6. Instale las placas de cierre (N) en los soportes frontal y posterior usando un tornillo M4 × 8 (K) en cada uno.

7. Coloque el gancho (11) del carril frontal (B) en la muesca (10) de la parte frontal del finalizador de documentos al mismo tiempo que inserta el resalto (13) del carril frontal (B) en el orificio (12) del finalizador de documentos.
8. Fije el carril frontal (B) usando 2 tornillos M4 × 12 (M).

9. Instale el carril posterior (C) en la parte posterior del finalizador de documentos usando 2 tornillos M4 × 12 (M) de la misma forma.

---

6. Montieren Sie die Sperrplatten (N) an den vorderen und hinteren Stützen mit jeweils einer M4 × 8 Schraube (K).

7. Setzen Sie den Haken (11) der vorderen Schiene (B) in die Aussparung (10) vorne am Dokument-Finisher ein, und setzen Sie dabei auch den Vorsprung (13) an der vorderen Schiene (B) in die Öffnung (12) des Dokument-Finishers ein.
8. Befestigen Sie die vordere Schiene (B) mit den 2 M4 × 12 Schrauben (M).

9. Montieren Sie die hintere Schiene (C) auf gleiche Weise mit 2 M4 × 12 Schrauben (M) an der Rückseite des Dokument-Finishers.

---

6. Installare le piastre di bloccaggio (N) sui supporti anteriore e posteriore utilizzando una vite M4 × 8 (K) ciascuna.

7. Posizionare il gancio (11) della rotaia anteriore (B) sull'incavo (10) alla parte anteriore della finitrice di documenti, contemporaneamente inserire la la sporgenza (13) sulla rotaia anteriore (B) nel foro (12) nella finitrice di documenti.
8. Fissare la rotaia anteriore (B) utilizzando 2 viti M4 × 12 (M).

9. Installare la rotaia posteriore (C) alla parte posteriore della finitrice di documenti utilizzando 2 viti M4 × 12 (M) alla stessa maniera.

---

6. 使用各 1 颗 M4×8(K) 螺钉将锁定板 (N) 安装在前后的支柱上。

7. 将前部导轨 (B) 的挂钩 (11) 嵌入装订器前部的缺口 (10)，同时将前部导轨 (B) 的卡销 (13) 插入到装订器的孔 (12) 中。
8. 使用 2 颗 M4×12(M) 螺钉来固定前部导轨 (B)。

9. 按相同方法，使用 2 颗 M4×12(M) 螺钉将后部导轨 (C) 安装在装订器后部。

---

6. 잠금 플레이트 (N) 를 앞뒤 지주에 나사 M4×8(K) 각 1 개로 장착합니다 .

7. 문서 피니셔 앞의 이음부분 (10) 에 레일 앞 (B) 의 후크 (11) 를 걸고 동시에 문서 피니셔 구멍 (12) 에 레일 앞 (B) 의 보스 (13) 를 넣습니다 .
8. 나사 M4×12(M) 2 개로 레일 앞 (B) 을 고정합니다 .

9. 같은 방식으로 나사 M4×12(M) 2 개로 문서 피니셔 뒤에 레일 뒤 (C) 를 장착합니다 .

---

6. ロックプレート (N) を前後の支柱にビス M4×8(K) 各 1 本で取り付ける。

7. ドキュメントフィニッシャー前の切り欠き (10) にレール前 (B) のフック (11) を引っかけ、同時にドキュメントフィニッシャーの穴 (12) にレール前 (B) のボス (13) を入れる。
8. ビス M4×12(M)2 本でレール前 (B) を固定する。

9. 同様に、ビス M4×12(M)2 本で、ドキュメントフィニッシャー後にレール後 (C) を取り付ける。

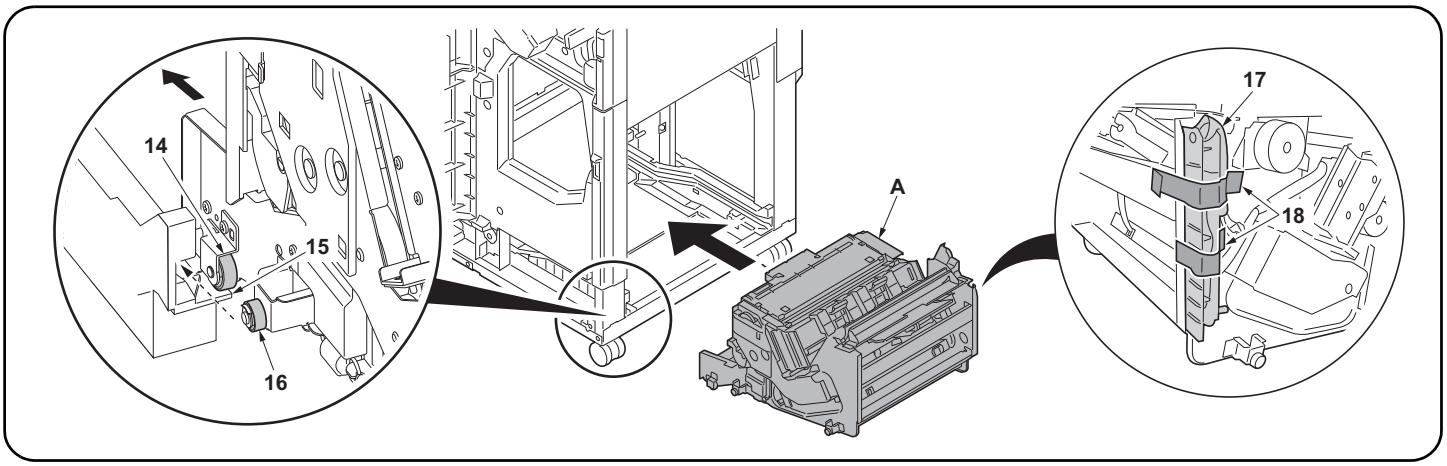

10. Place the left rollers (14) at the front and rear of the center-folding unit (A) on the tracks (15) on the inner sides of the rails, and roll in the direction shown. The middle rollers (16) will roll onto the rails.

11. Insert the center-folding unit (A) into the document finisher along the rails.

(NOTICE)

Insert without removing the fixing tape (18) for the wire guide (17). (The fixing tape (18) is removed at step 15)

---

10. Disposer les rouleaux gauche (14) à l'avant et à l'arrière de la plieuse (A) sur les voies (15) de côté interne des glissières et faire rouler dans la direction indiquée. Les rouleaux intermédiaires (16) vont se placer d'eux-mêmes sur les glissières.

11. Insérer la plieuse (A) dans le retoucheur de document le long des glissières.

(AVIS)

Insérer sans enlever la bande adhésive de fixation (18) pour le guide câble (17). (La bande adhésive de fixation (18) est enlevée à l'étape 15).

---

10. Coloque los rodillos izquierdos (14) en las partes frontal y posterior de la unidad de plegado (A) en las pistas (15) de los lados internos de los carriles y hágalos rodar en la dirección de la ilustración. Los rodillos intermedios (16) rodarán sobre los carriles.

11. Inserte la unidad de plegado (A) en el finalizador de documentos a lo largo de los carriles.

(AVISO)

Inserte sin quitar la cinta de fijación (18) de la guía para el cable (17). (La cinta de fijación (18) se quita en el paso 15.)

---

10. Setzen Sie die linken Rollen (14) an der Vorderseite und Rückseite der Mittenfalteinheit (A) auf die Bahnen (15) an den Innenseiten der Schienen, und rollen Sie sie in der dargestellten Richtung. Die mittleren Rollen (16) rollen nun auf die Schienen.

11. Schieben Sie die Mittenfalteinheit (A) entlang den Schienen in den Dokument-Finisher ein.

(HINWEIS)

Schieben Sie sie ein, ohne das Klebeband (18) für die Kabelführung (17) zu entfernen. (Das Klebeband (18) wird bei Schritt 15 entfernt.)

---

10. Posizionare i rulli di sinistra (14) alla parte anteriore e posteriore dell'unità di piegatura centrale (A) sulle piste (15) sui lati interni delle rotaie, e farli scorrere nella direzione mostrata. I rulli intermedi (16) scorreranno sulle rotaie.

11. Inserire l'unità di piegatura centrale (A) nella finitrice di documenti lungo le rotaie.

(NOTIFICA)

Inserire senza rimuovere il nastro di fissaggio (18) per la guida cavi (17). (Il nastro di fissaggio (18) viene rimosso al punto 15)

---

10. 将中缝装订一折页单元 (A) 前后的左侧滑轮 (14) 放在导轨内侧的转动部 (15) 上，并按箭头方向转动。将中间滑轮 (16) 插入到导轨上。

11. 将中缝装订一折页单元 (A) 沿着导轨插入到装订器中。

（注意）

插入时不需剥除电线导板（17）的固定胶带（18）。（在步骤 15 时剥除固定胶带（18））

---

10. 접기 유니트 (A) 의 앞뒤에 있는 좌측 코로 (14) 를 레일 내측에 있는 굴림부 (15) 에 얹고 화살표 방향으로 굴립니다 . 중간코로 (16) 가 레일에 삽입됩니다 .

11. 접기 유니트 (A) 를 레일에 붙여 문서 피니셔에 삽입합니다 .

(주의)

전선 가이드 (17) 의 고정 테이프 (18) 를 떼어 내지 않고 삽입할 것 . (고정 테이프 (18) 는 순서 15 에서 떼어 냅니다 .)

---

10. 中折りユニット (A) の前後にある左コロ (14) を、レールより内側にある転がし部 (15) に乗せ、矢印方向に転がす。中間コロ (16) がレールに挿入される。

11. 中折りユニット (A) をレールに沿ってドキュメントフィニッシャーに挿入する。

（注意）

電線ガイド (17) の固定テープ (18) を剥がさずに挿入すること。(固定テープ (18) は手順 15 で剥がす)

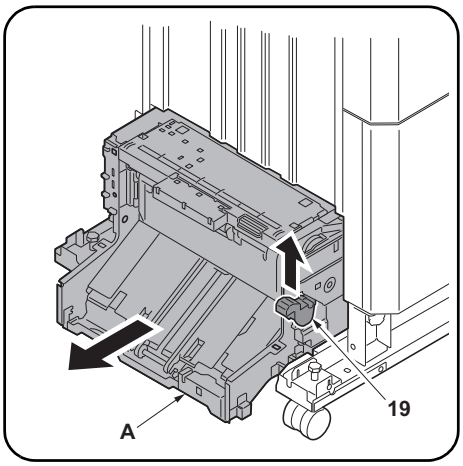

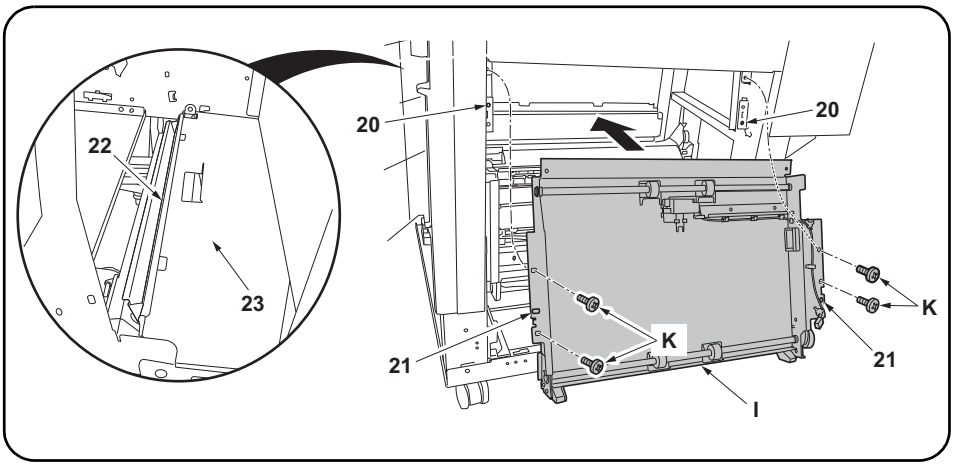

12. Release the lock lever (19) and pull out the center-folding unit (A) to the left of the document finisher.

13. Align the holes (21) in the relay paper conveying unit (I) with the 2 projections (20) on the document finisher. Install so that the lip (22) on the top frame of the relay paper conveying unit rests on the document finisher's frame (23).

14. Install the relay paper conveying unit (I) using 4 M4 × 8 screws (K).

---

12. Libérer le levier de verrouillage (19) et sortir la plieuse (A) par la gauche du retoucheur de document.

13. Aligner les trous (21) de l'unité de transport de relais (I) avec les 2 saillies (20) du retoucheur de document. Procéder de sorte que la lèvre (22) du châssis supérieur de l'unité de transport de relais repose sur le châssis du retoucheur de document (23).

14. Installer l'unité de transport de relais (I) à l'aide de 4 vis M4 × 8 (K).

---

12. Libere la palanca de bloqueo (19) y extraiga la unidad de plegado (A) hacia la izquierda del finalizador de documentos.

13. Alinee los orificios (21) de la unidad de transporte de papel (I) con los dos resaltos (20) del finalizador de documentos. Instale de forma tal que el reborde (22) del marco superior de la unidad de transporte de papel apoye en el marco del finalizador de documentos (23).

14. Instale la unidad de transporte de papel por relevador (I) usando 4 tornillos M4 × 8 (K).

---

12. Lösen Sie den Verriegelungshebel (19) und ziehen Sie die Mittenfalteinheit (A) zur linken Seite des Dokument-Finishers heraus.

13. Richten Sie die Öffnungen (21) der eingesetzten Papierfördereinheit (I) auf die 2 Vorsprünge (20) des Dokument-Finishers aus. Montieren Sie so, dass die Lippe (22) am oberen Rahmen der eingesetzten Papierfördereinheit auf dem Rahmen des Dokument-Finishers (23) ruht.

14. Montieren Sie die eingesetzte Papierfördereinheit (I) mit 4 M4 × 8 Schrauben (K).

---

12. Rilasciare la leva di blocco (19) e quindi estrarre l'unità di piegatura centrale (A) alla sinistra della finitrice di documenti.

13. Allineare i fori (21) nell'unità relay di trasporto carta (I) con le 2 sporgenze (20) sulla finitrice di documenti. Installare in modo che il bordo (22) sulla struttura superiore dell'unità relay di trasporto carta rimanga sulla struttura (23) della finitrice di documenti.

14. Installare l'unità relay di trasporto carta (I) utilizzando 4 viti M4 × 8 (K).

---

12. 解除锁定杆（19），将中缝装订－折页单元（A）从文档整理器的左侧拉出。

13. 将装订器的 2 处突出部（20）与中间搬运单元（I）的孔（21）对齐。将中间搬运单元上部框架的弯曲部（22）放在装订器的框架上（23）以进行安装。

14. 使用 4 颗 M4×8(K) 螺钉来安装后中间搬运单元（I）。

---

12. 잠금레버 (19) 를 해제하고 중철 유니트 (A) 를 문서 피니셔 좌측으로 이동시킵니다 .

13. 문서 피니셔의 돌기 (20) 2 개로 중계반송 유니트 (I) 의 구멍 (21) 을 맞춥니다 . 중계반송 유니트 상부 플레임의 구부러진 부분 (22) 이 문서 피니셔의 플레임 (23) 에 얹히게 장착합니다 .

14. 나사 M4×8(K) 4 개로 중계반송 유니트 (I) 를 장착합니다 .

---

12. ロックレバー(19) を解除し、中折りユニット (A) をドキュメントフィニッシャー左側へ引き出す。

13. ドキュメントフィニッシャーの突起 (20)2 個に中継搬送ユニット (I) の穴 (21) を合わせる。中継搬送ユニット上部フレームの折曲がり部 (22) がドキュメントフィニッシャーのフレーム (23) に乗るように取り付ける。

14. ビス M4×8(K)4 本で、中継搬送ユニット (I) を取り付ける。

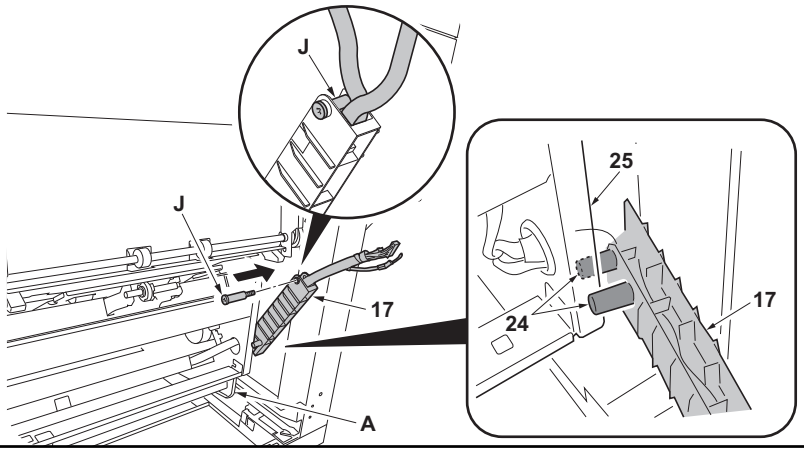

15. Remove the fixing tape (18) for the wire guide (17) and insert the pin (J) into the wire guide (17), with the 2 projections (24) on either side of the frame (25).
(NOTICE)
Insert the pin (J) to keep wires in the wire guide (17).
16. Screw the pin (J) into the document finisher to anchor the wire guide (17).

---

15. Enlever la bande adhésive de fixation (18) du guide câble (17) et insérer la goupille (J) dans le guide câble (17) avec les 2 saillies (24) de chaque côté du bâti (25).
(AVIS)
Insérer la goupille (J) pour que les câbles demeurent dans le guide câble (17).
16. Visser la goupille (J) dans le retoucheur de document pour fixer le guide câble (17) en place.

---

15. Quite la cinta de fijación (18) de la guía para el cable (17) e inserte el pasador (J) en la guía para el cable (17) con los 2 resaltos (24) a cada lado del marco (25).
(AVISO)
Inserte el pasador (J) para mantener los cables en la guía para el cable (17).
16. Atornille el pasador (J) en el finalizador de documentos para anclar la guía para el cable (17).

---

15. Entfernen Sie das Klebeband (18) für die Kabelführung (17) und stecken Sie die Rändelschraube (J) in die Kabelführung (17), wobei der Rahmen (25) zwischen den 2 Vorsprüngen (24) liegen muss.
(HINWEIS)
Stecken Sie die Rändelschraube (J) ein, um die Kabel in der Kabelführung (17) zu halten.
16. Schrauben Sie die Rändelschraube (J) in den Dokument-Finisher, um die Kabelführung (17) zu verankern.

---

15. Rimuovere il nastro di fissaggio (18) per la guida cavi (17) e quindi inserire il perno (J) nella guida cavi (17), con le 2 sporgenze (24) su ciascun lato della struttura (25).
(NOTIFICA)
Inserire il perno (J) per mantenere i cavi nella guida cavi (17).
16. Avvitare il perno (J) nella finitrice di documenti per ancorare la guida cavi (17).

---

15. 剥除电线导板（17）的固定胶带（18），使框架（25）处于 2 个卡销（24）之间，将 1 个销子（J）从电线导板（17）上穿过。
（注意）
将销钉（J）穿过电线导板（17）时，注意避免电线露出电线导板（17）外。
16. 将销钉（J）的螺纹部分安装到装订器上，以固定电线导板（17）。

---

15. 전선 가이드 (17) 의 고정 테이프 (18) 를 떼어 내고 보스 (24) 2 개의 사이에 프레임 (25) 이 들어 있는 상태에서 핀 (J) 1 개를 전선 가이드 (17) 에 통과시킵니다 .
(주의)
핀 (J) 은 전선이 전선 가이드 (17) 에서 나오지 않도록 통하게 합니다 .
16. 핀 (J) 의 나사부분을 문서 피니셔에 장착하고 전선 가이드 (17) 를 고정합니다 .

---

15. 電線ガイド（17）の固定テープ（18）を剥がし、ボス（24）2 本の間にフレーム（25）が入っている状態で、ピン（J）1 本を電線ガイド（17）に通す。
（注意）
ピン（J）は電線が電線ガイド（17）から出ないように通す。
16. ピン（J）のネジ部分をドキュメントフィニッシャーに取り付け、電線ガイド（17）を固定する。

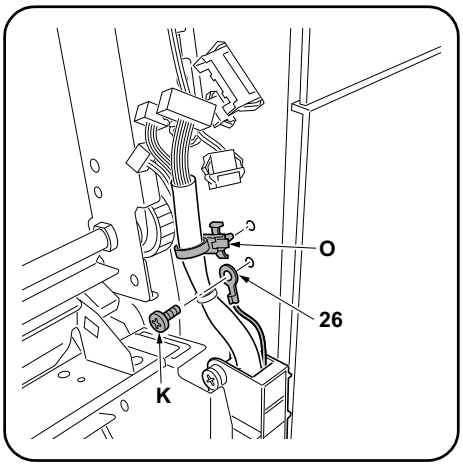

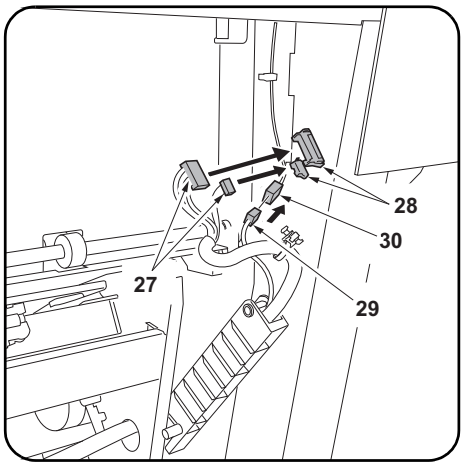

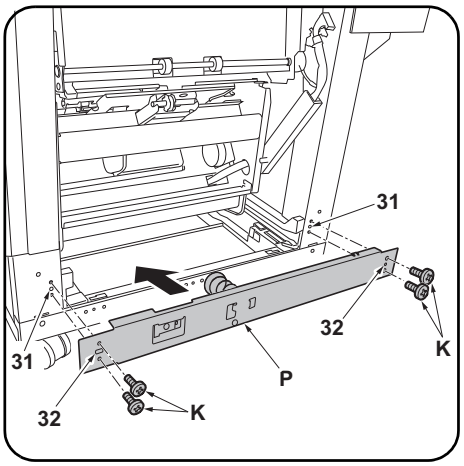

17. Install the ground wire (26) to the frame using an M4 × 8 screw (K).
18. Install the binding band (O) to the wires and fit the band into the frame.

19. Plug the 2 connectors (27) into the connectors (28) on the document finisher.
20. Plug the connector (29) into the connector (30) on the relay paper conveying unit (I).

21. Align holes (32) at 2 locations in the guide (P) with projections (31) on the document finisher.
22. Install the guide (P) on the document finisher using 4 M4 × 8 screws (K).

---

17. Fixer le câble de terre (26) au châssis en procédant à l'aide d'une vis M4 × 8 (K).
18. Monter le collier de fixation (O) sur les câbles et assujettir le collier au châssis.

19. Enficher les 2 connecteurs (27) dans les connecteurs (28) du retoucheur de document.
20. Enficher le connecteur (29) dans le connecteur (30) de l'unité de transport de relais (I).

21. Aligner les trous (32) en 2 endroits du guide (P) avec les saillies (31) du retoucheur de document.
22. Monter le guide (P) sur le retoucheur de document à l'aide de 4 vis M4 × 8 (K).

---

17. Instale el cable de conexión a tierra (26) en el marco usando un tornillo M4 × 8 (K).
18. Instale la correa de sujeción (O) en los cables y coloque la correa en el marco.

19. Enchufe los 2 conectores (27) en los conectores (28) del finalizador de documentos.
20. Enchufe el conector (29) en el conector (30) de la unidad de transporte de papel por relevador (I).

21. Alinee los orificios (32) de los 2 lugares de la guía (P) con los resaltos (31) del finalizador de documentos.
22. Instale la guía (P) en el finalizador de documentos usando 4 tornillos M4 × 8 (K).

---

17. Montieren Sie das Massekabel (26) mit einer M4 × 8 Schraube (K) an den Rahmen.
18. Bringen Sie das Schellenband (O) an den Kabeln an und setzen Sie das Band in den Rahmen ein.

19. Verbinden Sie die 2 Steckverbinder (27) mit den Steckverbindern (28) des Dokument-Finishers.
20. Verbinden Sie den Steckverbinder (29) mit dem Steckverbinder (30) der eingesetzten Papierfördereinheit (I).

21. Richten Sie die Öffnungen (32) an 2 Stellen in der Führung (P) auf die Vorsprünge (31) des Dokument-Finishers aus.
22. Montieren Sie die Führung (P) mit 4 M4 × 8 Schrauben (K) am Dokument-Finisher.

---

17. Installare il cavo di terra (26) alla struttura utilizzando una vite M4 × 8 (K).
18. Installare la fascetta di legatura (O) ai cavi e quindi fissare la fascetta nella struttura.

19. Inserire i 2 connettori (27) nei connettori (28) sulla finitrice di documenti.
20. Inserire il connettore (29) nel connettore (30) sull'unità relay di trasporto carta (I).

21. Allineare i fori (32) alle 2 posizioni nella guida (P) con le sporgenze (31) sulla finitrice di documenti.
22. Installare la guida (P) sulla finitrice di documenti utilizzando 4 viti M4 × 8 (K).

---

17. 使用 M4×8(K) 螺钉将装接地线 (26) 安装到框架上。
18. 在电线上安装束线带 (O)，将束线带 (O) 嵌入到框架上。

19. 将 2 个连接器 (27) 与装订器的连接器 (28) 相连接。
20. 将连接器 (29) 与中间搬运单元 (H) 的连接器 (30) 相连接。

21. 将装订器的 2 处突出部 (31) 与导板 (P) 的孔 (32) 对齐。
22. 使用 4 颗螺钉 M4×8(K) 将导板 (P) 安装到装订器上。

---

17. 나사 M4×8(K) 로 접지선 (26) 을 플레임에 장착합니다 .
18. 전선에 결속 밴드 (O) 를 장착하고 플레임에 결속 밴드 (O) 를 꽂습니다 .

19. 커넥터 (27) 2 개를 문서 피니셔의 커넥터 (28) 에 접속합니다 .
20. 커넥터 (29) 를 중계 유니트 (I) 의 커넥터 (30) 에 접속합니다 .

21. 문서 피니셔의 돌기 (31) 2 곳을 가이드 (P) 의 구멍 (32) 에 맞춥니다 .
22. 나사 M4×8(K) 4 개로 문서 피니셔에 가이드 (P) 를 장착합니다 .

---

17. ビス M4×8(K) でアース線 (26) をフレームに取り付ける。
18. 電線に結束バンド (O) を取り付け、フレームに結束バンド (O) をはめ込む。

19. コネクター(27)2 個をドキュメントフィニッシャーのコネクター(28) に接続する。
20. コネクター(29) を中継搬送ユニット (I) のコネクター(30) に接続する。

21. ドキュメントフィニッシャーの突起 (31)2 箇所にガイド (P) の穴 (32) に合わせる。
22. ビス M4×8(K)4 本でドキュメントフィニッシャーにガイド (P) を取り付ける。

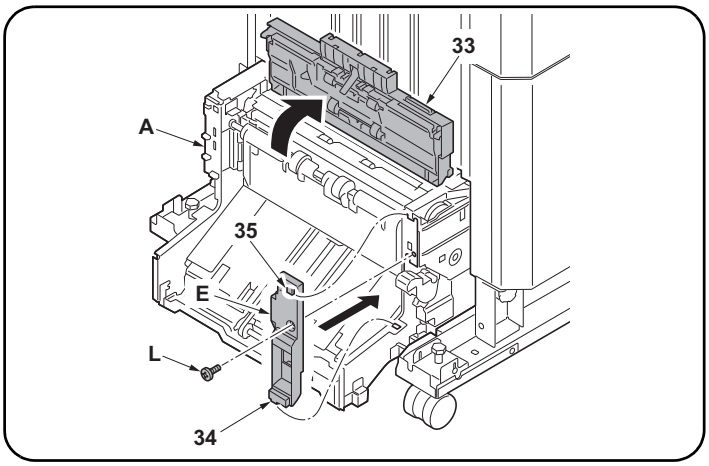

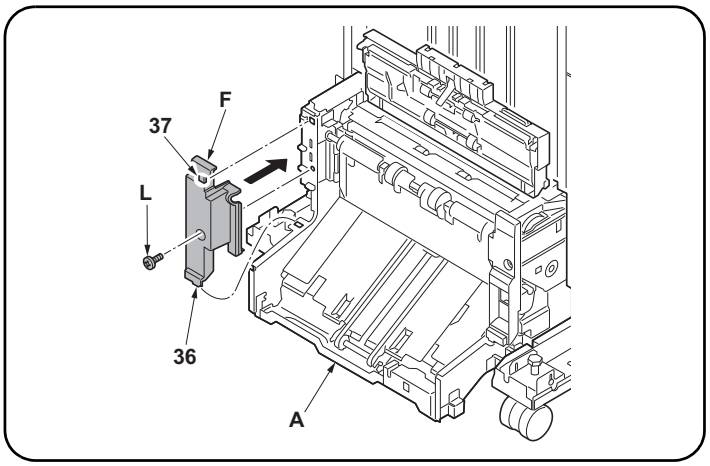

23. Open the eject cover (33).
24. Engage the projection (34) and hook (35) on the front side cover (E) with the center-folding unit (A). Complete installation of the front side cover (E) using an M4 × 10 screw (black) (L).

25. Engage the projection (36) and hook (37) on the rear side cover (F) with the center-folding unit (A). Complete installation of the rear side cover (F) using an M4 × 10 screw (black) (L).

---

23. Ouvrir le capot d'éjection (33).
24. Engager la saillie (34) et le crochet (35) du capot latéral avant (E) dans la plieuse (A). Finaliser l'installation du capot latéral avant (E) à l'aide d'une vis M4 × 10 (noire) (L).

25. Engager la saillie (36) et le crochet (37) du capot latéral arrière (F) dans la plieuse (A). Finaliser l'installation du capot latéral arrière (F) à l'aide d'une vis M4 × 10 (noire) (L).

---

23. Abra la cubierta de expulsión (33).
24. Enganche el resalto (34) y el gancho (35) de la cubierta lateral frontal (E) con la unidad de plegado (A). Complete la instalación de la cubierta lateral frontal (E) usando un tornillo M4 × 10 (negro) (L).

25. Enganche el resalto (36) y el gancho (37) de la cubierta lateral posterior (F) con la unidad de plegado (A). Complete la instalación de la cubierta lateral posterior (F) usando un tornillo M4 × 10 (negro) (L).

---

23. Öffnen Sie die Auswurfabdeckung (33).
24. Hängen Sie den Vorsprung (34) und den Haken (35) der vorderen Seitenabdeckung (E) in die Mittenfalteinheit (A) ein. Befestigen Sie die vordere Seitenabdeckung (E) mit einer M4 × 10 Schraube (schwarz) (L).

25. Hängen Sie den Vorsprung (36) und den Haken (37) der hinteren Seitenabdeckung (F) in die Mittenfalteinheit (A) ein. Befestigen Sie die hintere Seitenabdeckung (F) mit einer M4 × 10 Schraube (schwarz) (L).

---

23. Aprire il coperchio di espulsione carta (33).
24. Innestare la sporgenza (34) e il gancio (35) sul coperchio laterale anteriore (E) con l'unità di piegatura centrale (A). Completare l'installazione del coperchio laterale anteriore (E) utilizzando una vite M4 × 10 (nera) (L).

25. Innestare la sporgenza (36) e il gancio (37) sul coperchio laterale posteriore (F) con l'unità di piegatura centrale (A). Completare l'installazione del coperchio laterale posteriore (F) utilizzando una vite M4 × 10 (nera) (L).

---

23. 打开排纸盖板 (33)。
24. 将前部侧盖板 (E) 的突出部 (34) 以及挂钩 (35) 嵌入到中缝装订一折页单元 (A) 中，使用 1 颗 M4×10（黑）(L) 螺钉来安装前部侧盖板 (E)。

25. 将后部侧盖板 (F) 的突出部 (36) 以及挂钩 (37) 嵌入到中缝装订一折页单元 (A) 中，使用 1 颗 M4×10（黑）(L) 螺钉来安装后部侧盖板 (F)。

---

23. 배출 커버 (33) 를 엽니다 .
24. 사이드 커버 앞 (E) 의 돌기 (34) 및 후크 (35) 를 접기 유니트 (A) 에 꽂습니다 . 나사 M4×10 (흑) (L) 1 개로 사이드 커버 앞 (E) 을 장착합니다 .

25. 사이드 커버 뒤 (F) 의 돌기 (36) 및 후크 (37) 를 접기 유니트 (A) 에 꽂습니다 . 나사 M4×10 (흑) (L) 1 개로 사이드 커버 뒤 (F) 를 장착합니다 .

---

23. 排出カバー(33) を開く。
24. サイドカバー前 (E) の突起 (34) およびフック (35) を、中折りユニット (A) にはめ込む。
ビス M4×10(黒)(L)1 本で、サイドカバー前 (E) を取り付ける。

25. サイドカバー後 (F) の突起 (36) およびフック (37) を、中折りユニット (A) にはめ込む。
ビス M4×10(黒)(L)1 本で、サイドカバー後 (F) を取り付ける。

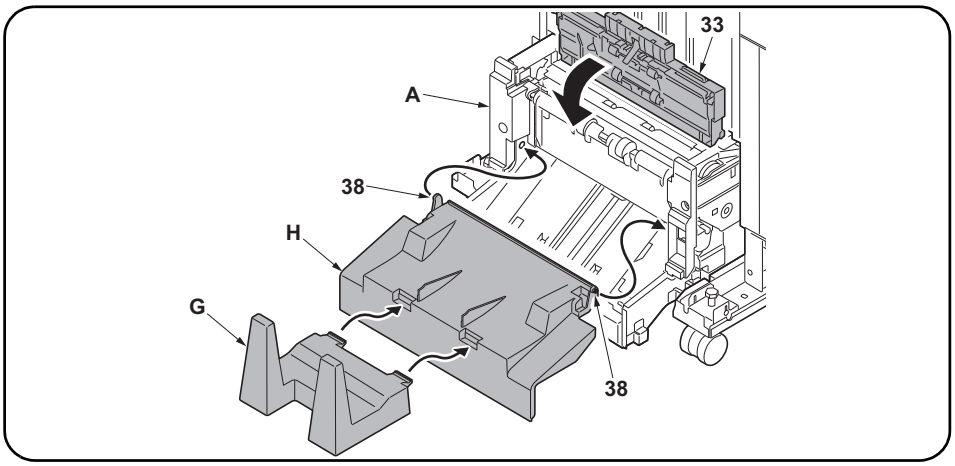

26. Insert the 2 pins (38) on the output tray (H) in the holes in the center-folding unit (A) to install the tray.
27. Install the output stock tray (G) on the output tray (H).
28. Close the eject cover (33).

---

26. Insérer les 2 goupilles (38) du plateau de sortie (H) dans les trous de la plieuse (A) pour installer le plateau.
27. Installer la butée de sortie du papier (G) sur le plateau de sortie (H).
28. Fermer le capot d'éjection (33).

---

26. Inserte los 2 pasadores (38) de la bandeja de salida (H) en los orificios de la unidad de plegado (A) para instalar la bandeja.
27. Instale la bandeja de recolección de papel de salida (G) en la bandeja de salida (H).
28. Cierre la cubierta de expulsión (33).

---

26. Stecken Sie die 2 Rändelschrauben (38) des Ausgabefachs (H) in die Öffnungen der Mittenfalteinheit (A) ein, um das Fach zu installieren.
27. Bringen Sie das Ausgabestapelfach (G) am Ausgabefach (H) an.
28. Schließen Sie die Auswurfabdeckung (33).

---

26. Inserire i 2 perni (38) sul vassoio di uscita (H) nei fori sull'unità di piegatura centrale (A) per installare il vassoio.
27. Installare il vassoio di uscita stoccaggio (G) sul vassoio di uscita (H).
28. Chiudere il coperchio di esplusione carta (33).

---

26. 将排纸托盘 (H) 的 2 根销钉 (38) 插入中缝装订一折页单元 (A) 的孔中，以安装排纸托盘 (H)。
27. 将堆纸托盘 (G) 安装到排纸托盘 (H) 上。
28. 关闭排纸盖板 (33)。

---

26. 배지트레이 (H) 의 핀 (38) 2 개를 접기 유니트 (A) 의 구멍에 넣고 배지 트레이 (H) 를 장착합니다 .
27. 배지 저장 트레이 (G) 를 배지 트레이 (H) 에 장착합니다 .
28. 배출커버 (33) 를 닫습니다 .

---

26. 排紙トレイ (H) のピン (38)2 本を中折りユニット (A) の穴に入れ、排紙トレイ (H) を取り付ける。
27. 排紙ストックトレイ (G) を排紙トレイ (H) に取り付ける。
28. 排出カバー(33) を閉じる。

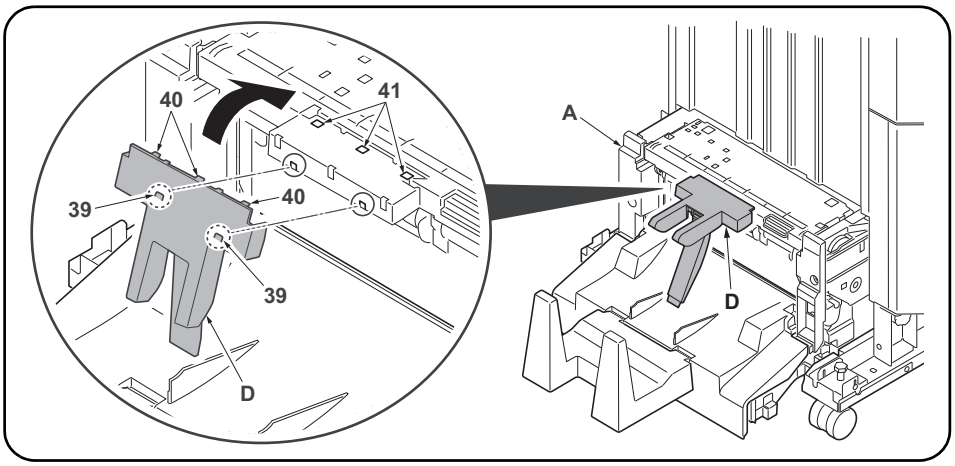

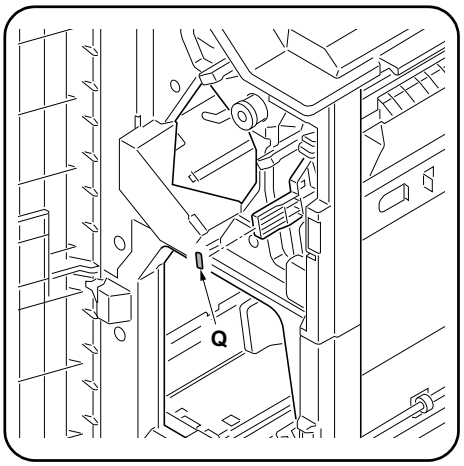

29. Insert the 2 projections (39) on the back of the output stopper (D) in the portions circled on the center-folding unit (A).
Fit the 3 hooks (40) on the output stopper (D) in the holes (41) in the center-folding unit (A).

30. Adhere the D7 label (Q) at the location shown in the figure.

---

29. Insérer les 2 saillies (39) au dos de la butée de sortie (D) dans les parties encerclées de la plieuse (A).
Assujettir les 3 crochets (40) de la butée de sortie (D) dans les trous (41) de la plieuse (A).

30. Apposer l'étiquette D7 (Q) à l'endroit repéré sur la figure.

---

29. Inserte los 2 resaltos (39) de la parte posterior del tope de salida (D) en las porciones marcadas con un círculo de la unidad de plegado (A).
Coloque los 3 ganchos (40) del tope de salida (D) en los orificios (41) de la unidad de plegado (A).

30. Adhiera la etiqueta D7 (Q) en el lugar que se muestra en la ilustración.

---

29. Setzen Sie die 2 Vorsprünge (39) auf der Rückseite des Ausgabeanschlags (D) in die mit Kreis bezeichneten Positionen der Mittenfalteinheit (A) ein.
Setzen Sie die 3 Haken (40) des Ausgabeanschlags (D) in die Öffnungen (41) der Mittenfalteinheit (A) ein.

30. Kleben Sie den D7 Aufkleber (Q) an der abgebildeten Stelle an.

---

29. Inserire le 2 sporgenze (39) sulla parte posteriore del fermo di uscita (D) nelle porzioni cerchiate sull'unità di piegatura centrale (A).
Fissare i 3 ganci (40) sul fermo di uscita (D) nei fori (41) nell'unità di piegatura centrale (A).

30. Far aderire l'etichetta D7 (Q) alla posizione mostrata nella figura.

---

29. 将排纸挡板 (D) 内侧的 2 处突出部 (39) 插入到中缝装订－折页单元 (A) 的圆框部。
将排纸挡板 (D) 的 3 个挂钩 (40) 嵌入到中缝装订－折页单元 (A) 的孔 (41) 中。

30. 在图示位置黏贴 D7 标签 (Q)。

---

29. 배지 스토퍼 (D) 의 안쪽에 있는 돌기 (39) 2 곳을 접기 유니트 (A) 의에 삽입합니다 .
배지 스토퍼 (D) 의 후크 (40) 3 곳을 접기 유니트 (A) 의 구멍 (41) 에 끼웁니다 .

30. D7 라벨 (Q) 을 그림의 위치에 붙입니다 .

---

29. 排紙ストッパー(D) の裏側にある突起 (39)2 箇所を中折ユニット (A) の丸枠部に挿入する。
排紙ストッパー(D) のフック (40)3 箇所を中折りユニット (A) の穴 (41) にはめ込む。

30. D7 ラベル (Q) を図の位置に貼り付ける。

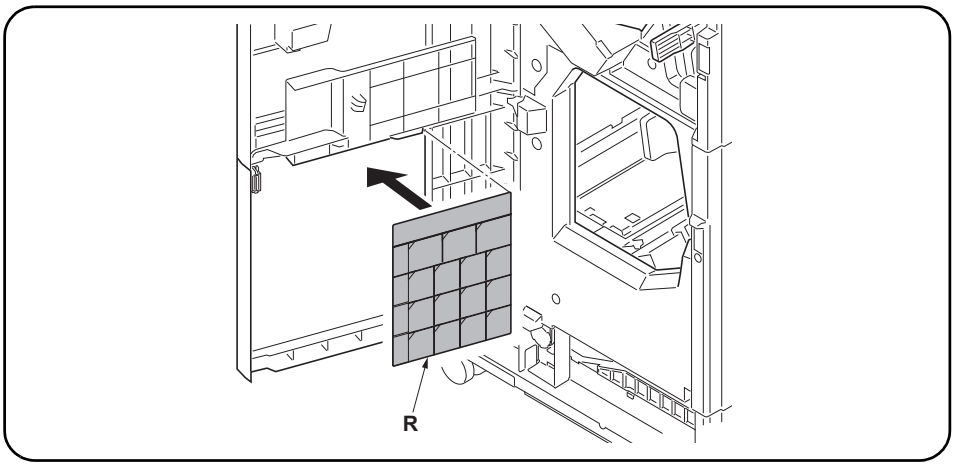

31. Adhere the Operation label (R) at the location shown in the figure.
32. Reinstall the foot cover (5) and lower rear cover (7).
33. Close the lower front cover (3) and the upper front cover (1).

---

31. Apposer l'étiquette de fonctionnement (R) à l'endroit repéré sur la figure.
32. Reposer le couvercle du pied (5) et le couvercle arrière inférieur (7).
33. Fermer le capot inférieur avant (3) et le couvercle avant supérieur (1).

---

31. Adhiera la etiqueta de funcionamiento (R) en el lugar que se muestra en la ilustración.
32. Vuelva a instalar la cubierta de la pata (5) y la cubierta posterior inferior (7).
33. Cierre la cubierta frontal inferior (3) y la cubierta frontal superior (1).

---

31. Kleben Sie den Bedienungsaufkleber (R) an der abgebildeten Stelle an.
32. Bringen Sie die Fußabdeckung (5) und die untere hintere Abdeckung (7) wieder an.
33. Schließen Sie die untere vordere Abdeckung (3) und die obere vordere Abdeckung (1).

---

31. Far aderire l'etichetta di operazione (R) alla posizione mostrata nella figura.
32. Reinstallare la copertura del piede (5) e il coperchio inferiore posteriore (7).
33. Chiudere il coperchio inferiore anteriore (3) e il coperchio superiore anteriore (1).

---

31. 在图示位置黏贴操作标签 (R)。
32. 按原样安装脚座盖板 (5) 和后部下盖板 (7)。
33. 关闭前部下盖板 (3) 和前部上盖板 (1)。

---

31. 조작 라벨 (R) 을 그림의 위치에 붙입니다 .
32. 풋커버 (5) 및 뒤하 커버 (7) 를 원래대로 장착합니다 .
33. 전면 아래커버 (3) 및 전면 윗커버 (1) 를 닫습니다 .

---

31. 操作ラベル (R) を図の位置に貼り付ける。
32. フットカバー(5) および後下カバー(7) を元通りに取り付ける。
33. 前下カバー(3) および前上カバー(1) を閉じる。

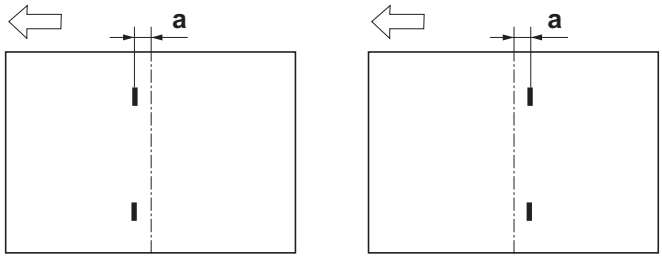

Adjustment of centerfold-stapling position
Check the distance (a) from the stapling position to the center of the paper. If the distance (a) is over the reference value, follow the procedure below to adjust the position.
<Reference value (a)> ±2 mm

1. Set maintenance mode U246, select Booklet and Staple Pos.
2. Adjust the values.
3. Press the Start key to confirm the setting value.

Réglage de la position d'agrafage des pages centrales dépliables
Vérifier la distance (a) entre la position d'agrafage et le milieu de la feuille de papier. Si cette distance (a) est supérieure à la valeur de référence, régler la position en procédant de la manière suivante.
<Valeur de référence (a)> ±2 mm

1. Passer en mode maintenance U246, sélectionner Booklet et Staple Pos.
2. Régler les valeurs.
3. Appuyer sur la touche de Start pour confirmer la valeur de réglage.

Ajuste de la posición de grapado de la unidad de plegado
Compruebe la distancia (a) desde la posición de grapado con respecto al centro del papel. Si dicha distancia (a) supera el valor de referencia, realice el siguiente procedimiento para ajustar la posición.
<Valor de referencia (a)> ±2 mm

1. Entre en el modo de mantenimiento U246, seleccione Booklet y Staple Pos.
2. Ajuste los valores.
3. Pulse la tecla de Start para confirmar el valor de configuración.

Einstellung der Mittenfalt-Heftposition
Überprüfen Sie den Abstand (a) zwischen der Heftposition und der Papiermitte. Falls der Abstand (a) größer als der Bezugswert ist, ist die Position gemäß der nachstehenden Prozedur nachzustellen.
<Bezugswert (a)> ±2 mm

1. Schalten Sie in den Wartungsmodus U246, wählen Sie Booklet und Staple Pos.
2. Die Werte einstellen.
3. Den Einstellwert durch Drücken der Start-Taste bestätigen.

Regolazione della posizione di cucitura dell'unità di piegatura centrale
Controllare la distanza (a) dalla posizione di spillatura al centro del foglio. Se la distanza (a) è superiore al valore di riferimento, seguire la procedura riportata sotto per regolare la posizione.
<Valore di riferimento (a)> ±2 mm

1. Impostare la modalità manutenzione U246, selezionare Booklet e Staple Pos.
2. Regolare i valori.
3. Premere il tasto di Start per confermare il valore dell'impostazione.

中缝装订位置调整
检查从装订位置到纸张中心的距离 (a)。如果距离 (a) 超出标准值范围，按照下列步骤调节装订位置。
＜标准值 (a) ＞ ±2mm

1. 设置维护模式 U246，选择 Booklet、Staple Pos。
2. 调整设定值。
3. 按 Start 键，以确定设定值。

접기 스테이플 위치조정
스테이플 위치에서 용지 중앙까지의 거리離 (a) 를 확인합니다 . 거리 (a) 가 기준치 외의 경우에는 다음 순서로 조정을 합니다 .
＜기준치 (a) ＞ ±2mm

1. 메인터넌스 모드 U246 을 세트하고 Booklet, Staple Pos 를 선택합니다 .
2. 설정치를 조정합니다 .
3. 시작키를 누르고 설정치를 확인합니다 .

中とじステープル位置調整
ステープル位置から用紙センターまでの距離 (a) を確認する。距離 (a) が基準値外の場合、次の手順で調整を行う。
＜基準値 (a) ＞ ±2mm

1. メンテナンスモード U246 をセットし、Booklet、Staple Pos を選択する。
2. 設定値を調整する。
3. スタートキーを押し、設定値を確定する。

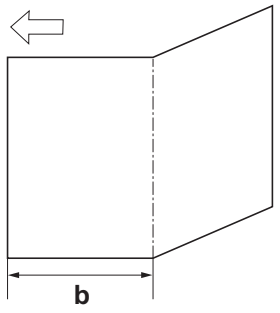

Adjustment of center folding position
Check the distance (b) from the edge of the paper to the center folding position. If the distance (b) is over the reference value, follow the procedure below to adjust the position.
<Reference value (b)>
A4, Letter: Length of paper × 1/2 ±2 mm
A3, Ledger, B4: Length of paper × 1/2 ±3 mm

1. Set maintenance mode U246, select Booklet and Booklet Pos.
2. Adjust the values.
3. Press the Start key to confirm the setting value.

Réglage de la position de pliage central
Vérifier la distance (b) entre le bord de la feuille de papier et la position de pliage central. Si cette distance (b) est supérieure à la valeur de référence, régler la position en procédant de la manière suivante.
<Valeur de référence (b)>
A4, Letter : Longueur de la feuille × 1/2 ±2 mm
A3, Ledger, B4: Longueur de la feuille × 1/2 ±3 mm

1. Passer en mode maintenance U246, sélectionner Booklet et Booklet Pos.
2. Régler les valeurs.
3. Appuyer sur la touche de Start pour confirmer la valeur de réglage.

Ajuste de la posición de plegado
Compruebe la distancia (b) desde el borde del papel a la posición de plegado. Si dicha distancia (b) supera el valor de referencia, realice el siguiente procedimiento para ajustar la posición.
<Valor de referencia (b)>
A4, Letter: Longitud del papel × 1/2 ±2 mm
A3, Ledger, B4: Longitud del papel × 1/2 ±3 mm

1. Entre en el modo de mantenimiento U246, seleccione Booklet y Booklet Pos.
2. Ajuste los valores.
3. Pulse la tecla de Start para confirmar el valor de configuración.

Einstellung der Mittenfaltposition
Überprüfen Sie den Abstand (b) zwischen der Papierkante und der Mittenfaltposition. Falls der Abstand (b) größer als der Bezugswert ist, ist die Position gemäß der nachstehenden Prozedur nachzustellen.
<Bezugswert (b)>
A4, Letter: Papierlänge × 1/2 ±2 mm
A3, Ledger, B4: Papierlänge × 1/2 ±3 mm

1. Schalten Sie in den Wartungsmodus U246, wählen Sie Booklet und Booklet Pos.
2. Die Werte einstellen.
3. Den Einstellwert durch Drücken der Start-Taste bestätigen.

Regolazione della posizione centrale di piegatura
Controllare la distanza (b) dal bordo della carta alla posizione centrale di piegatura. Se la distanza (b) è superiore al valore di riferimento, seguire la procedura riportata sotto per regolare la posizione.
<Valore di riferimento (b)>
A4, Letter: Lunghezza carta × 1/2 ±2 mm
A3, Ledger, B4: Lunghezza carta × 1/2 ±3 mm

1. Impostare la modalità manutenzione U246, selezionare Booklet e Booklet Pos.
2. Regolare i valori.
3. Premere il tasto di Start per confermare il valore dell'impostazione.

中缝折叠位置调整
检查从纸张头部到折叠位置的距离 (b)。如果距离 (b) 超出标准值范围，按照下列步骤调节折叠位置。
＜标准值 (b) ＞
A4,Letter: 纸张长度 ×1/2 ± 2mm
A3,Ledger,B4: 纸张长度 ×1/2 ± 3mm

1. 设置维护模式 U246，选择 Booklet、Booklet Pos。
2. 调整设定值。
3. 按 Start 键，以确定设定值。

접기 위치조정
용지 끝에서 접기 위치까지의 거리 (b) 를 확인합니다 . 거리 (b) 가 기준치 외의 경우에는 다음 순서로 조정을 합니다 .
＜기준치 (b) ＞
A4,Letter: 용지길이 ×1/2 ± 2mm
A3,Ledger,B4: 용지길이 ×1/2 ± 3mm

1. 메인터넌스 모드 U246 을 세트하고 Booklet, Booklet Pos 를 선택합니다 .
2. 설정치를 조정합니다 .
3. 시작키를 누르고 설정치를 확인합니다 .

中折り位置調整
用紙端から中折り位置までの距離 (b) を確認する。距離 (b) が基準値外の場合、次の手順で調整を行う。
＜基準値 (b) ＞
A4,Letter: 用紙長 ×1/2 ± 2mm
A3,Ledger,B4: 用紙長 ×1/2 ± 3mm

1. メンテナンスモード U246 をセットし、Booklet、Booklet Pos を選択する。
2. 設定値を調整する。
3. スタートキーを押し、設定値を確定する。

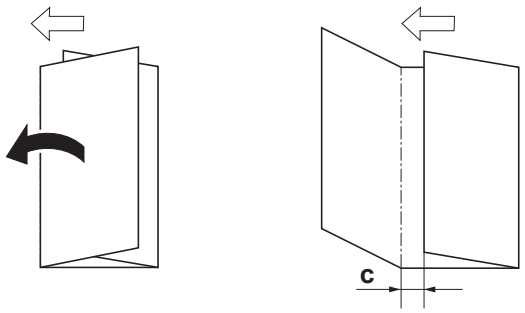

Adjustment of tri-folding position
Check the distance (c) from the edge of the paper to the second folding position. If the distance (c) is over the reference value, follow the procedure below to adjust the position.
<Reference value (c)> 7.0 ±2 mm

1. Set maintenance mode U246, select Booklet and Three Fold.
2. Adjust the values.
3. Press the Start key to confirm the setting value.

Réglage de la position de triple pliage
Vérifier la distance (c) entre le bord de la feuille de papier et la position du deuxième pliage. Si cette distance (c) est supérieure à la valeur de référence, régler la position en procédant de la manière suivante.
<Valeur de référence (c)> 7,0 ±2 mm

1. Passer en mode maintenance U246, sélectionner Booklet et Three Fold.
2. Régler les valeurs.
3. Appuyer sur la touche de Start pour confirmer la valeur de réglage.

Ajuste de la posición de plegado tríptico
Compruebe la distancia (c) desde el borde del papel a la segunda posición de plegado. Si dicha distancia (c) supera el valor de referencia, realice el siguiente procedimiento para ajustar la posición.
<Valor de referencia (c)> 7,0 ±2 mm

1. Entre en el modo de mantenimiento U246, seleccione Booklet y Three Fold.
2. Ajuste los valores.
3. Pulse la tecla de Start para confirmar el valor de configuración.

Einstellung der Dreilagenfaltposition
Überprüfen Sie den Abstand (c) zwischen der Papierkante und der zweiten Faltposition. Falls der Abstand (c) größer als der Bezugswert ist, ist die Position gemäß der nachstehenden Prozedur nachzustellen.
<Bezugswert (c)> 7,0 ±2 mm

1. Schalten Sie in den Wartungsmodus U246, wählen Sie Booklet und Three Fold.
2. Die Werte einstellen.
3. Den Einstellwert durch Drücken der Start-Taste bestätigen.

Regolazione della posizione di piegatura tripla
Controllare la distanza (c) dal bordo della carta alla posizione della seconda piegatura. Se la distanza (c) è superiore al valore di riferimento, seguire la procedura riportata sotto per regolare la posizione.
<Valore di riferimento (c)> 7,0 ±2 mm

1. Impostare la modalità manutenzione U246, selezionare Booklet e Three Fold.
2. Regolare i valori.
3. Premere il tasto di Start per confermare il valore dell'impostazione.

三折位置调整
检查从纸张头部到第 2 个折叠位置的距离（c）。如果距离（c）超出标准值范围，按照下列步骤调节折叠位置。
＜标准（c）＞7.0±2mm

1. 设置维护模式 U246，选择 Booklet、Three Fold。
2. 调整设定值。
3. 按 Start 键，以确定设定值。

두번 접기 위치 조정
용지끝과 두번째 접히는 위치까지의 거리 (c) 를 확인합니다 . 거리 (c) 가 기준치 외의 경우에는 다음 순서로 조정을 합니다 .
＜기준치 (c) ＞ 7.0±2mm

1. 메인터넌스 모드 U246 을 세트하고 Booklet, Three Fold 를 선택합니다 .
2. 설정치를 조정합니다 .
3. 시작키를 누르고 설정치를 확인합니다 .

三折り位置調整
用紙端と二つ目の折り位置までの距離（c）を確認する。距離（c）が基準値外の場合、次の手順で調整を行う。
＜基準値（c）＞7.0±2mm

1. メンテナンスモード U246 をセットし、Booklet、Three Fold を選択する。
2. 設定値を調整する。
3. スタートキーを押し、設定値を確定する。

NOTICE
This accessory is for use only with the following Applicant's Listed Machine.
Machine: DF-790,DF-7110

AVIS
Cet accessoire est utilisable uniquement avec le copieur figurant dans la liste du demandeur suivant.
Modèle: DF-790,DF-7110

AVISO
Este accesorio es sólo para usar en las siguientes fotocopiadoras de la lista de solicitantes.
Modelo: DF-790,DF-7110

HINWEIS
Dieses Zubehör ist nur für den Einsatz mit der folgenden Antragstellerlisten-Kopiermaschine vorgesehen.
Modell: DF-790,DF-7110

NOTIFICA
Questo accessorio deve essere usato solo con le seguenti fotocopiatrici nella lista dell’applicante.
Modello: DF-790,DF-7110

注意
本产品适用于以下机型。
机型： DF-790,DF-7110

주의
본 제품은 이하의 기종에 적용됩니다 .
기종: DF-790,DF-7110

注意
本製品は、以下の機種に適用します。
機種: DF-790,DF-7110

MEMO

303ND5671002

2016. 3
303ND56710-02

INSTALLATION GUIDE FOR MAILBOX

INSTALLATION GUIDE

GUIDE D'INSTALLATION

GUÍA DE INSTALACION

INSTALLATIONSANLEITUNG

GUIDA ALL'INSTALLAZIONE

安装手册

설치안내서

設置手順書

MT-730(B)

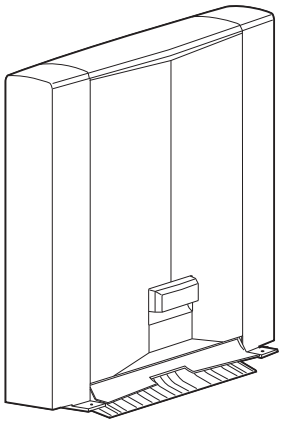

English

A different procedure is required depending on the product which is installed with this unit.Each procedure is described in the following pages.
When installing to a document finisher, see Page 1 to Page 6.
When installing to a Printer, see Page 7 to Page 12.

Français

Une procédure différente est requise selon le produit qui est installé avec cette unité.Chaque procédure est décrite dans les pages suivantes.
Lors de l'installation sur un module finition de documents, voir Page 1 à Page 6.
Lors de l'installation sur une imprimante, voir Page 7 à Page 12.

Español

El procedimiento es diferente según el producto que se instale con esta unidad.En las siguientes páginas, se describe cada procedimiento.
Para la instalación con un finalizador de documentos, consulte las páginas de la 1 a la 6.
Para la instalación con una impresora, consulte las páginas de la 7 a la 12.

Deutsch

Je nach verwendetem Modell ist eine andere Vorgehensweise zur Installation dieses Teils erforderlich.Die unterschiedlichen Vorgehensweisen werden auf den folgenden Seiten erläutert.
Bei Installation an einem Dokumentenfinisher siehe Seiten 1 bis 6.
Bei Installation an einem Drucker siehe Seiten 7 bis 12.
.

Italiano

Si richiede una procedura diversa in funzione del prodotto su cui è installata l'unità.Le singole procedure sono descritte nelle pagine seguenti.
Quando si installa un finisher documenti, vedere le pagine da 1 a 6.
Quando si installa una stampante, vedere le pagine da 7 a 12.

简体中文

根据安装对象，安装步骤略有不同。各个步骤记载在下面的页面。
安装到装订器时，请参见第 1 ～ 6 页。
安装到打印机时，请参见第 7 ～ 12 页。

한국어

이 장치에 설치되는 제품에 따라 절차가 다릅니다 . 다음 페이지에서 각 절차를 설명합니다 .
문서 피니셔에 설치하는 경우 1 페이지 ~6 페이지를 참조하십시오 .
프린터에 설치하는 경우 7 페이지 ~12 페이지를 참조하십시오 .

日本語

装着する対象によって、取付手順は異なります。それぞれ、以下のページに記載しています。
ドキュメントフィニッシャーに設置する場合;1 ページ～ 6 ページ
プリンターに設置する場合;7 ページ～ 12 ページ

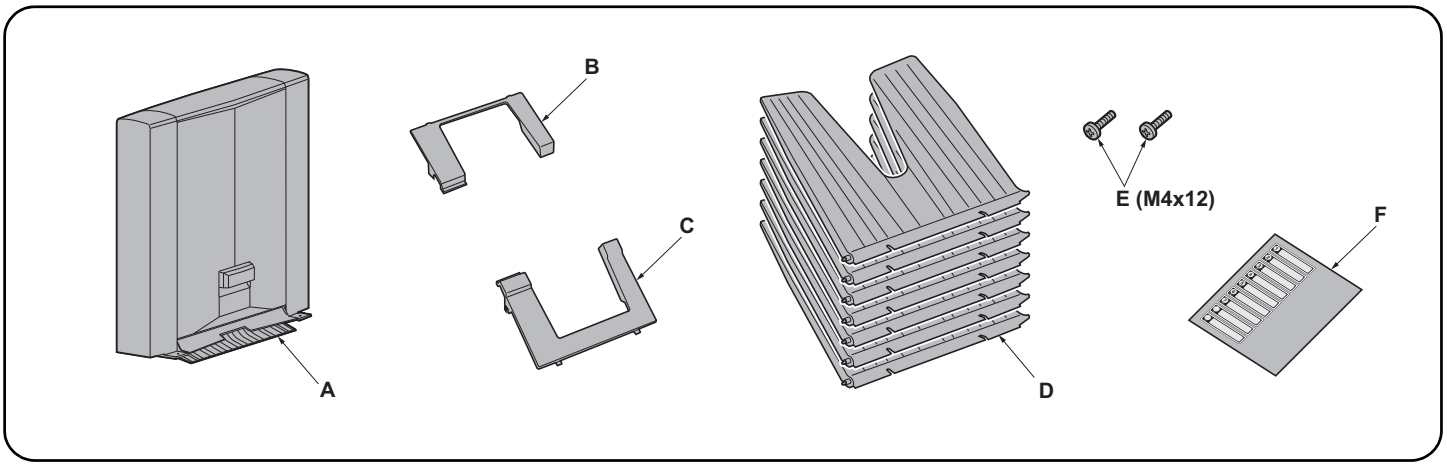

English

Supplied parts

A. Mailbox 1
B. Front mounting plate cover 1
C. Rear mounting plate cover 1
D. Copy eject bins 7
E. M4 × 12 screw 2
F. Tray name label (for users)..... 1

Be sure to remove any tape and/or cushioning materials from the parts supplied.

Français

Pièces fournies

A. Boîte à lettres 1
B. Couvercle de la plaque de montage avant 1
C. Couvercle de la plaque de montage arrière ... 1
D. Case d'éjection de copies..... 7
E. Vis M4 × 12..... 2
F. Étiquette de nom de plateau (pour les utilisateurs) 1

Veillez à retirer les morceaux de bande adhésive et/ou les matériaux de rembourrage des pièces fournies.

Español

Partes suministradas

A. Buzón de correo 1
B. Cubierta de la placa de montaje frontal 1
C. Cubierta de la placa de montaje trasera.... 1
D. Bandejas de expulsión de copias 7
E. Tornillo M4 × 12 2
F. Etiqueta de nombre de la bandeja (para usuarios)..... 1

Asegúrese de quitar todas las cintas y/o material amortiguador de las partes suministradas.

Deutsch

Enthaltene Teile

A. Mailbox 1
B. Vordere Abdeckung der Montageplatte 1
C. Hintere Abdeckung der Montageplatte 1
D. Kopienausgabefächer..... 7
E. Schraube M4 × 12 2
F. Fachnamenaufkleber (für Benutzer)..... 1

Stellen Sie sicher, dass sämtliche Klebebänder und/oder Polstermaterial von den gelieferten Teilen entfernt wurden.

Italiano

Parti fornite

A. Mailbox 1
B. Coperchio della piastra di montaggio anteriore .. 1
C. Coperchio della piastra di montaggio posteriore. 1
D. Scomparti di espulsione delle copie 7
E. Vite M4 × 12..... 2
F. Etichetta di nome del vassoio (per utenti) 1

Rimuovere tutti i nastri adesivi e/o i materiali di protezione dalle parti fornite.

简体中文

附属品

A. 邮箱..... 1
B. 支撑板前盖板..... 1
C. 支撑板后盖板..... 1
D. 接纸盘..... 7
E. M4×12 螺丝 2
F. 托盘名称标贴（用户用）..... 1

如果附属品上带有固定胶带，缓冲材料时务必揭下。

한국어

동봉품

A. 메일박스..... 1
B. 부착판커버 앞..... 1
C. 부착판커버 뒤..... 1
D. 배출핀..... 7
E. 나사 M4 × 12..... 2
F. 트레이 명칭 씰（사용자용）..... 1

동봉품에 고정 테이프，완충재가 붙어 있는 경우에는 반드시 제거하십시오.

日本語

同梱品

A. メールボックス..... 1
B. 取付板カバー前..... 1
C. 取付板カバー後..... 1
D. 排出ピン..... 7
E. ビス M4×12 2
F. トレイ名称シール(ユーザー用) 1

同梱品に固定テープ、緩衝材が付いている場合は必ず取り外すこと。

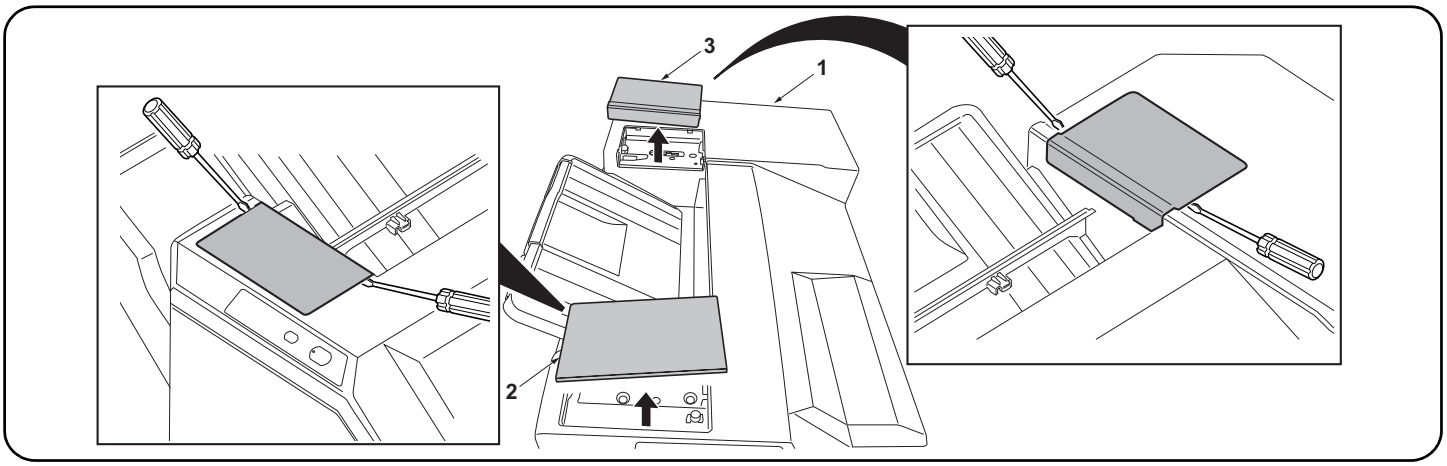

Procedure
Before starting installation, be sure to turn the main power switch of the machine off, and unplug the power plug from the wall outlet.

1. Remove the front top cover (2) and rear top cover (3) at the top of the finisher (1) using a flat-blade screwdriver or the like.

Procédure
Avant de commencer l'installation, s'assurer de mettre la machine hors tension et de débrancher la fiche d'alimentation de la prise murale.

1. Retirer le couvercle supérieur avant (2) et le couvercle supérieur arrière (3) situés en haut du retoucheur (1) à l'aide d'un tournevis à tête plate ou d'un outil équivalent.

Procedimiento
Antes de iniciar la instalación, asegúrese de apagar el interruptor de encendido de la máquina y desenchufar el cable de alimentación de la toma de pared.

1. Remueva la cubierta superior delantera (2) y la cubierta superior trasera (3) en la parte superior del finalizador (1) utilizando un destornillador de punta plana o similar.

Verfahren
Bevor Sie mit der Installation beginnen überzeugen Sie sich, dass der Netzschalter des Geräts ausgeschaltet und das Stromkabel aus der Steckdose gezogen ist.

1. Entfernen Sie die vordere obere Abdeckung (2) und die hintere obere Abdeckung (3) an der Oberseite des Finishers (1) mit einem Klingenschraubendreher oder dergleichen.

Procedura
Prima di iniziare l'installazione, spegnere la macchina e scollegare la spina dalla presa di corrente.

1. Rimuovere il coperchio superiore anteriore (2) e il coperchio superiore posteriore (3) dalla parte superiore del finitore (1) utilizzando un cacciavite a punta piatta, o un attrezzo simile.

安装步骤
安装前务必关闭机器的主电源开关，并从墙壁插座拔下电源插头。

1. 用一字形螺丝刀拆下装订器 (1) 上部的顶罩前盖板 (2) 和顶罩后盖板 (3)。

설치순서
설치를 시작하기 전에 반드시 본체의 주 전원 스위치를 끄고 벽 콘센트에서 전원 플러그를 분리하십시오 .

1. 피니셔 (1) 상부의 윗커버 앞 덮개 (2), 윗커버 뒤 덮개 (3) 를 마이너스 드라이버 등으로 제거합니다 .

取付手順
必ず機械本体の主電源スイッチを OFF にし、機械本体の電源プラグを抜いてから作業すること。

1. フィニッシャー (1) 上部の天カバー前フタ (2) 、天カバー後フタ (3) をマイナスドライバーなどで取り外す。

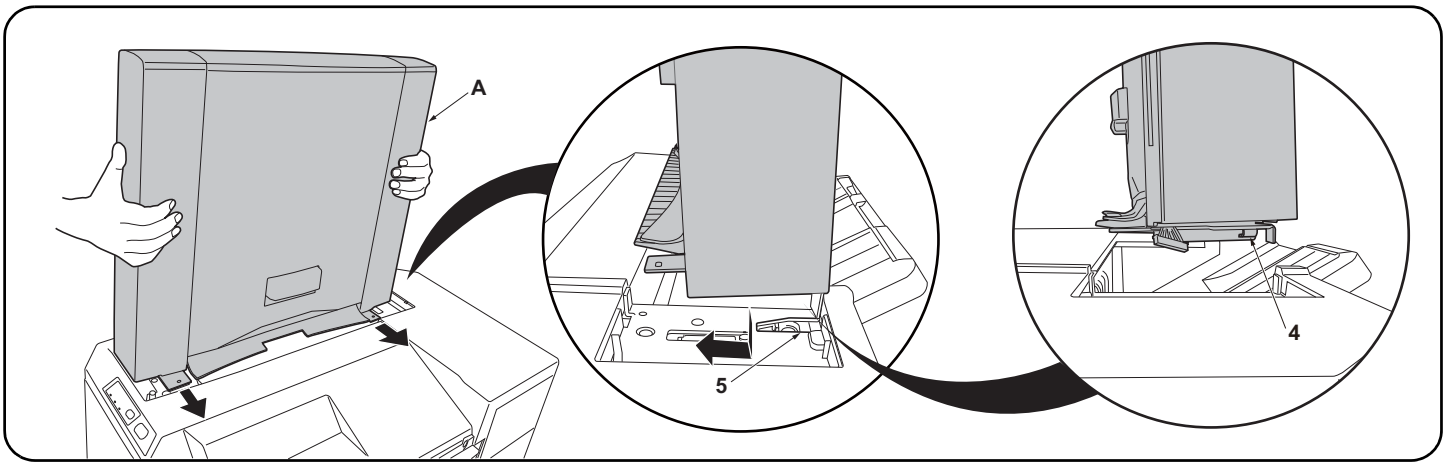

2. Fit the hooks (4) located at the front and rear of the bottom of the mailbox (A) into the notches (5) located at the front and rear of the top of the finisher (1) as shown in the illustration and attach the mailbox (A) to the finisher (1).
Note:
Lift the front and rear of the mailbox (A) lightly upward to make sure that no gap is made between the mailbox (A) and the machine.

---

2. Insérer les crochets (4) se trouvant à l'avant et à l'arrière au fond de la boîte à lettres (A) dans les encoches (5) situées à l'avant et à l'arrière en haut du retoucheur (1) comme illustré ici, puis fixer la boîte à lettres (A) au retoucheur (1).
Remarque:
Lever légèrement l'avant et l'arrière de la boîte à lettres (A) de sorte qu'il n'y ait aucun interstice entre la boîte à lettres (A) et la machine.

---

2. Coloque los ganchos (4) ubicados en la parte inferior frontal y trasera del buzón de correo (A) en las muescas (5) ubicadas en la parte superior frontal y trasera del finalizador (1), como se muestra en la ilustración, y coloque el buzón de correo (A) en el finalizador (1).
Nota:
Levante ligeramente la parte frontal y trasera del buzón de correo (A) para asegurarse de que no queda espacio entre el buzón de correo (A) y la máquina.

---

2. Setzen Sie die Haken (4) an der Vorder- und Rückseite der Mailbox (A) in die Öffnungen (5) vorne und hinten an der Oberseite des Finishers (1) ein, wie in der Abbildung dargestellt, und bringen Sie die Mailbox (A) am Finisher (1) an.
Hinweis:
Heben Sie die Vorder- und Rückseite der Mailbox (A) ein wenig an, damit sich kein Spalt zwischen der Mailbox (A) und dem Gerät bildet.

---

2. Inserire i ganci (4) posizionati sul davanti e sul dietro della parte di fondo della mailbox (A), negli incavi (5) posizionati sul davanti e sul dietro della parte superiore del finitore (1) come mostrato nell'illustrazione, e fissare la mailbox (A) al finitore (1).
Nota:
Sollevare leggermente la parte anteriore e posteriore della mailbox (A) verso l'alto per accertarsi che non vi sia dello spazio tra la mailbox (A) e la macchina.

---

2. 如图所示，将位于邮箱 (A) 底部前后侧的卡扣 (4) 嵌入位于装订器 (1) 顶部前后侧的凹口 (5)，并将邮箱 (A) 安装至装订器 (1)。
注：
轻轻向上提升邮箱 (A) 的前后侧，确保邮箱 (A) 未处于悬浮状态。

---

2. 메일박스 (A) 하부의 앞뒤에 있는 후크 (4) 를 피니셔 (1) 상부의 앞뒤에 있는 파인 홈에 (5) 에 일러스트와 같이 삽입하고 메일박스 (A) 를 피니셔측에 장착합니다 .
주
메일박스 (A) 의 앞뒤를 각각 상방향으로 가볍게 들어 메일박스 (A) 가 떠 있지 않은 것을 확인합니다 .

---

2. メールボックス (A) 下部の前後にあるフック (4) をフィニッシャー(1) 上部の前後にある切り欠き部 (5) にイラストのように挿入し、メールボックス (A) をフィニッシャー(1) に取り付ける。
注意
メールボックス (A) の前後をそれぞれ上方向に軽く持ち上げ、メールボックス (A) が浮かないことを確認する。

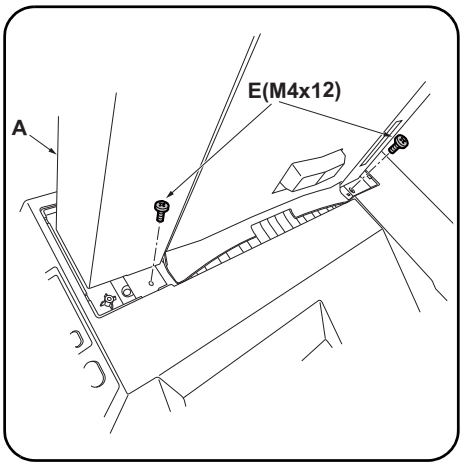

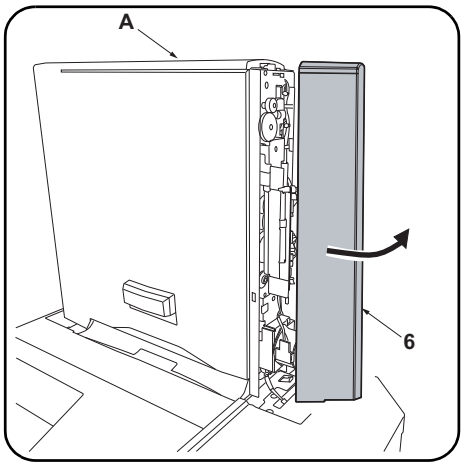

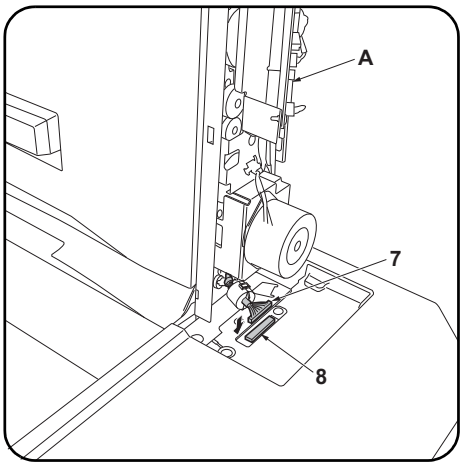

3. Secure the mailbox (A) using the two screws M4x12 (E).

4. Remove the rear cover (6) of the mailbox (A).

5. Plug the connector (7) of the mailbox (A) into the connector (8) of the machine body.
6. Reinstall the rear cover (6) of the mailbox (A).

---

3. Fixer la boîte à lettres (A) à l'aide de deux vis M4x12 (E).

4. Retirer le couvercle arrière (6) de la boîte à lettres (A).

5. Brancher le connecteur (7) de la boîte à lettres (A) dans le connecteur (8) du corps de la machine.
6. Remonter le couvercle arrière (6) de la boîte à lettres (A).

---

3. Fije el buzón de correo (A) con dos tornillos M4x12 (E).

4. Quite la cubierta posterior (6) del buzón de correo (A).

5. Enchufe el conector (7) del buzón de correo (A) al conector (8) del cuerpo de la máquina.
6. Vuelva a instalar la cubierta posterior (6) del buzón de correo (A).

---

3. Sichern Sie die Mailbox (A) mit zwei Schrauben M4x12 (E).

4. Entfernen Sie die hintere Abdeckung (6) der Mailbox (A).

5. Stecken Sie den Stecker (7) der Mailbox (A) in die Steckbuchse (8) des Gerätegehäuses.
6. Bringen Sie die hintere Abdeckung (6) der Mailbox (A) wieder an.

---

3. Fissare la mailbox (A) utilizzando le due viti M4x12 (E).

4. Rimuovere il coperchio posteriore (6) della mailbox (A).

5. Collegare il connettore (7) della mailbox (A) al connettore (8) del corpo macchina.
6. Reinstallare il coperchio posteriore (6) della mailbox (A).

---

3. 使用两个螺丝 M4x12（E）固定邮箱（A）。

4. 拆下邮箱 (A) 的后部盖板 (6)。

5. 将邮箱（A）的接插件（7）插入机器的接插件（8）。
6. 重新安装邮箱（A）的后盖板（6）。

---

3. M4x12 나사 (E) 두 개를 사용하여 메일박스 (A) 를 고정합니다 .

4. 메일박스 (A) 의 뒤커버 (6) 를 떼어냅니다 .

5. 메일박스 (A) 의 커넥터 (7) 를 본체의 커넥터 (8) 에 연결합니다
6. 메일박스 (A) 의 뒤커버 (6) 를 다시 장착합니다 .

---

3. ビス M4×12(E)2 本で、メールボックス (A) を固定する。

4. メールボックス (A) の後カバー(6) を取り外す。

5. メールボックス (A) のコネクター(7) を機械本体のコネクター (8) に接続する。
6. メールボックス (A) の後カバー(6) を元通りに取り付ける。

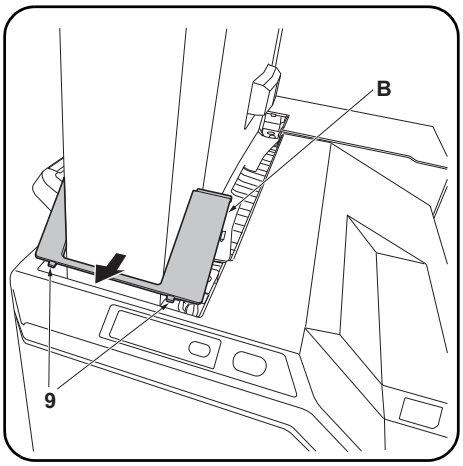

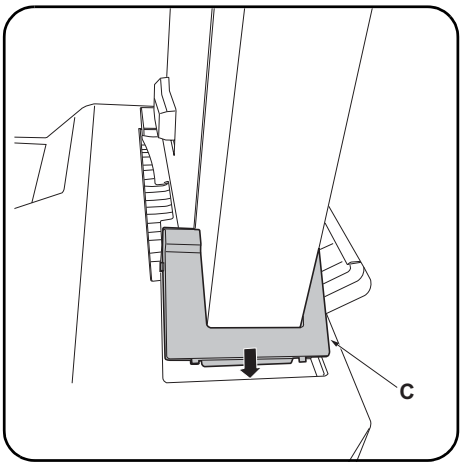

7. Insert the 2 hooks (9) on the front mounting plate cover (B) for the mailbox into the finisher to install the cover (B).

8. Install the rear mounting plate cover (C) on the finisher in the same way.

---

7. Insérer les 2 crochets (9) du couvercle de la plaque de montage avant (B) de la boîte à lettres dans le retourcheur pour installer ce couvercle (B).

8. Installer le couvercle de la plaque de montage arrière (C) sur le retoucheur en procédant de la même manière.

---

7. Para instalar la cubierta (B), inserte los 2 ganchos (9) de la cubierta de la placa de montaje frontal (B) para el buzón de correo en el finalizador.

8. Instale de la misma manera la cubierta de la placa de montaje trasera (C) en el finalizador.

---

7. Setzen Sie die 2 Haken (9) an der vorderen Abdeckung der Montageplatte (B) für die Mailbox in den Finisher ein, um die Abdeckung (B) zu installieren.

8. Bringen Sie auf gleiche Weise die hintere Abdeckung der Montageplatte (C) am Finisher an.

---

7. Inserire nel finitore i 2 ganci (9) posizionati sul coperchio della piastra di montaggio anteriore (B) per la mailbox, per installare il coperchio (B).

8. Installare il coperchio della piastra di montaggio posteriore (C) sul finitore nella stessa maniera.

---

7. 将邮箱的安装板前部盖板 (B) 的 2 个卡扣 (9) 插入到装订器中，以安装安装板前部盖板 (B)。

8. 按相同方法将安装板后部盖板 (C) 安装到装订器上。

---

7. 메일박스의 부착판 커버 앞 (B) 의 후크 (9) 2 곳을 피니셔에 삽입하고 부착판 커버 앞 (B) 을 장착합니다 .

8. 같은 방식으로 부착판 커버 뒤 (C) 를 피니셔에 장착합니다 .

---

7. メールボックスの取付板カバー前 (B) のフック (9)2 箇所をフィニッシャーに挿入し、取付板カバー前 (B) を取り付ける。

8. 同様に取付板カバー後 (C) をフィニッシャーに取り付ける。

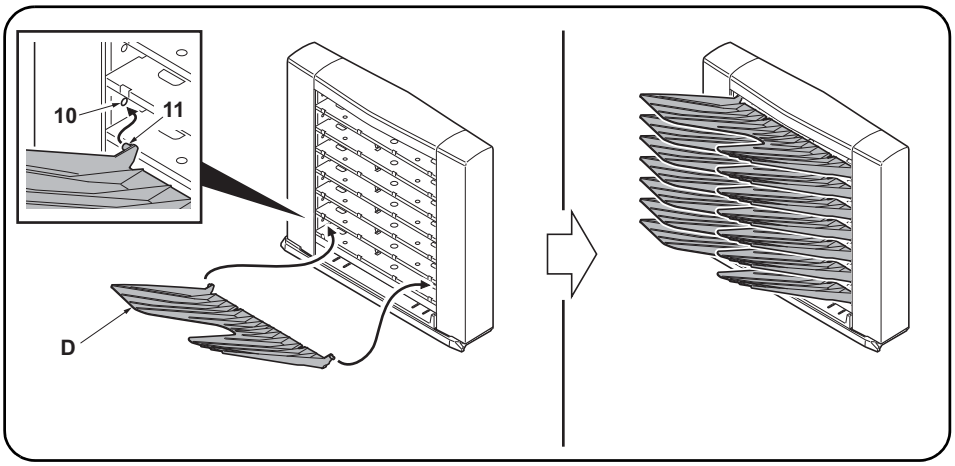

9. Fit the seven copy eject bins (D) to the ejection section of the mailbox (A) from the lowest bin to the highest.
Press both ends of each copy eject bin (D) to bend it a little, then fit the bin by inserting the front and rear pins (10) into the round holes (11) at the front and rear of the mailbox.

10. Insert the power plug from the machine into the outlet, turn the main power switch on, and verify the machine operates normally.

---

9. Fixer les sept cases d'éjection de copies (D) sur la section d'éjection de la boîte à lettres (A), en procédant de la case située tout en bas à celle située tout en haut.
Appuyer sur les deux extrémités de chaque case d'éjection des copies (D) pour cintrer légèrement cette pièce, puis monter la case en insérant les broches avant et arrière (10) dans les trous ronds (11) à l'avant et à l'arrière de la boîte à lettres.

10. Insérer la fiche d'alimentation de la machine dans la prise et mettre la machine sous tension, puis vérifier qu'elle fonctionne correctement.

---

9. Presione ambos extremos de cada bandeja de expulsión de copias (D) para doblarlas un poco; después, coloque la bandeja insertando los pasadores delantero y trasero (10) en los orificios redondos (11) en la parte frontal y posterior del buzón de correo.

10. Enchufe el cable de alimentación de la máquina en la toma de corriente y encienda el interruptor principal para comprobar que la máquina funciona correctamente.

---

9. Setzen Sie die sieben Kopienausgabefächer (D) in die Ausgabeöffnungen der Mailbox (A) ein, beginnend vom untersten Fach zum höchsten.
Drücken Sie beide Enden jedes Kopienausgabefachs (D) zusammen, um es etwas zu biegen. Setzen Sie das Fach ein, indem Sie die vorderen und hinteren Stifte (10) in die Rundlöcher (11) vorne und hinten an der Mailbox einsetzen.

10. Stecken Sie den Netzstecker des Geräts in eine Steckdose und schalten Sie den Hauptschalter des Geräts ein, um den Betrieb zu prüfen.

---

9. Installare i sette scomparti di espulsione delle copie (D) nella sezione di espulsione della mailbox (A), iniziando dallo scomparto più in basso fino a quello più in alto.
Premere le due estremità di ciascuno scomparto di espulsione delle copie (D) in modo da piegarlo leggermente, quindi installare lo scomparto inserendo i perni anteriore e posteriore (10) nei fori rotondi (11) presenti sul fronte e sul retro della mailbox.

10. Inserire la spina nella presa di corrente, accendere la macchina e controllare che funzioni correttamente.

---

9. 从邮箱（A）的排出部下面起按顺序安装 7 个接纸盘（D）。
按住接纸盘（D）的左右两侧并使其稍稍下垂，通过将前后的销钉（10）插入邮箱前后的圆孔（11）中来安装接纸盘。

10. 将机器的电源插头插入插座，然后打开主电源开关并确认机器能否正常操作。

---

9. 배출핀 (D) 7 개를 메일박스 (A) 의 배출부에 밑에서부터 순서대로 장착합니다 .
배출핀 (D) 의 좌우를 밀어 조금 휘게해 앞뒤의 핀 (10) 을 메일박스의 앞뒤의 둥근 구멍 (11) 에 삽입합니다 .

10. 기기본체의 전원 플러그를 콘센트에 꼽고 주전원 스위치를 ON 으로 해서 동작을 확인 합니다 .

---

9. 排出ビン (D)7 枚をメールボックス (A) の排出部に下から順番に取り付ける。
排出ビン (D) の左右を押し少したわませ、前後のピン (10) をメールボックスの前後の丸穴 (11) に挿入する。

10. 機械本体の電源プラグをコンセントに差し込み、主電源スイッチを ON にして動作を確認する。

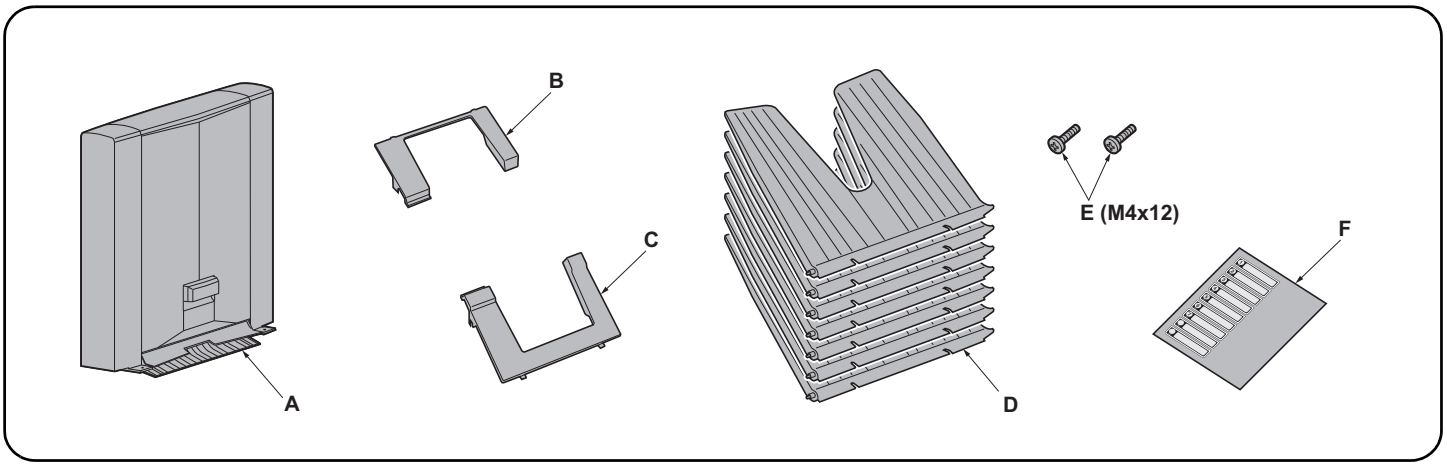

English

Supplied parts

A. Mailbox 1
B. Front mounting plate cover 1
C. Rear mounting plate cover 1
D. Copy eject bins 7
E. M4 × 12 screw 2
F. Tray name label (for users)..... 1

B and C are not used.

Be sure to remove any tape and/or cushioning materials from the parts supplied.

Français

Pièces fournies

A. Boîte à lettres 1
B. Couvercle de la plaque de montage avant 1
C. Couvercle de la plaque de montage arrière ... 1
D. Case d'éjection de copies..... 7
E. Vis M4 × 12..... 2
F. Étiquette de nom de plateau (pour les utilisateurs) 1

B et C ne sont pas utilisés.

Veillez à retirer les morceaux de bande adhésive et/ou les matériaux de rembourrage des pièces fournies.

Español

Partes suministradas

A. Buzón de correo 1
B. Cubierta de la placa de montaje frontal 1
C. Cubierta de la placa de montaje trasera.... 1
D. Bandejas de expulsión de copias 7
E. Tornillo M4 × 12 2
F. Etiqueta de nombre de la bandeja (para usuarios)..... 1

B y C no se utilizan.

Asegúrese de quitar todas las cintas y/o material amortiguador de las partes suministradas.

Deutsch

Enthaltene Teile

A. Mailbox 1
B. Vordere Abdeckung der Montageplatte 1
C. Hintere Abdeckung der Montageplatte 1
D. Kopienausgabefächer..... 7
E. Schraube M4 × 12 2
F. Fachnamenaufkleber (für Benutzer)..... 1

B und C werden nicht benötigt.

Stellen Sie sicher, dass sämtliche Klebebänder und/oder Polstermaterial von den gelieferten Teilen entfernt wurden.

Italiano

Parti fornite

A. Mailbox 1
B. Coperchio della piastra di montaggio anteriore .. 1
C. Coperchio della piastra di montaggio posteriore. 1
D. Scomparti di espulsione delle copie 7
E. Vite M4 × 12..... 2
F. Etichetta di nome del vassoio (per utenti) 1

B e C non sono utilizzati.

Rimuovere tutti i nastri adesivi e/o i materiali di protezione dalle parti fornite.

简体中文

附属品

A. 邮箱..... 1
B. 支撑板前盖板..... 1
C. 支撑板后盖板..... 1
D. 接纸盘..... 7
E. M4×12 螺丝 2
F. 托盘名称标贴（用户用）..... 1

不使用 B 和 C。

如果附属品上带有固定胶带，缓冲材料时务必揭下。

한국어

동봉품

A. 메일박스..... 1
B. 부착판커버 앞..... 1
C. 부착판커버 뒤..... 1
D. 배출핀..... 7
E. 나사 M4 × 12..... 2
F. 트레이 명칭 씰（사용자용）..... 1

B 와 C 는 사용되지 않습니다 .

동봉품에 고정 테이프，완충재가 붙어 있는 경우에는 반드시 제거하십시오 .

日本語

同梱品

A. メールボックス..... 1
B. 取付板カバー前..... 1
C. 取付板カバー後..... 1
D. 排出ビン..... 7
E. ビス M4×12 2
F. トレイ名称シール(ユーザー用) 1

B,C は使用しない。

同梱品に固定テープ、緩衝材がついている場合は、必ず取り外すこと。

Note
The Attachment Kit(AK-736) must be installed before the mailbox is installed.

Procedure
Before starting installation, be sure to turn the main power switch of the machine off, and unplug the power plug from the wall outlet.

Remarque
L'Attachment Kit (AK-736) doit être installé avant d'installer la boîte à lettres.

Procédure
Avant de commencer l'installation, s'assurer de mettre la machine hors tension et de débrancher la fiche d'alimentation de la prise murale.

Nota
El Attachment Kit (AK-736) se debe instalar antes de la instalación del buzón de correo.

Procedimiento
Antes de iniciar la instalación, asegúrese de apagar el interruptor de encendido de la máquina y desenchufar el cable de alimentación de la toma de pared.

Hinweis
Das Attachment Kit (AK-736) muss vor der Installation der Mailbox installiert werden.

Vorgehensweise
Bevor Sie mit der Installation beginnen überzeugen Sie sich, dass der Netzschalter des Geräts ausgeschaltet und das Stromkabel aus der Steckdose gezogen ist.

Nota
Installare l'Attachment Kit (AK-736) prima di installare il vassoio mailbox.

Procedura
Prima di iniziare l'installazione, spegnere la macchina e scollegare la spina dalla presa di corrente.

注
在安装邮箱前，请先安装连接组件（AK-736）。

安装步骤
安装前务必关闭机器的主电源开关，并从墙壁插座拔下电源插头。

주
메일박스를 설치하기 전에 부착 키트 (AK-736) 를 설치해야 합니다 .

설치순서
설치를 시작하기 전에 반드시 본체의 주 전원 스위치를 끄고 벽 콘센트에서 전원 플러그를 분리하십시오 .

注意
メールボックスを取付ける前にアタッチメントキット (AK-736) の取付けをおこなうこと。

取付手順
必ず機械本体の主電源スイッチを OFF にし、機械本体の電源プラグを抜いてから作業すること。

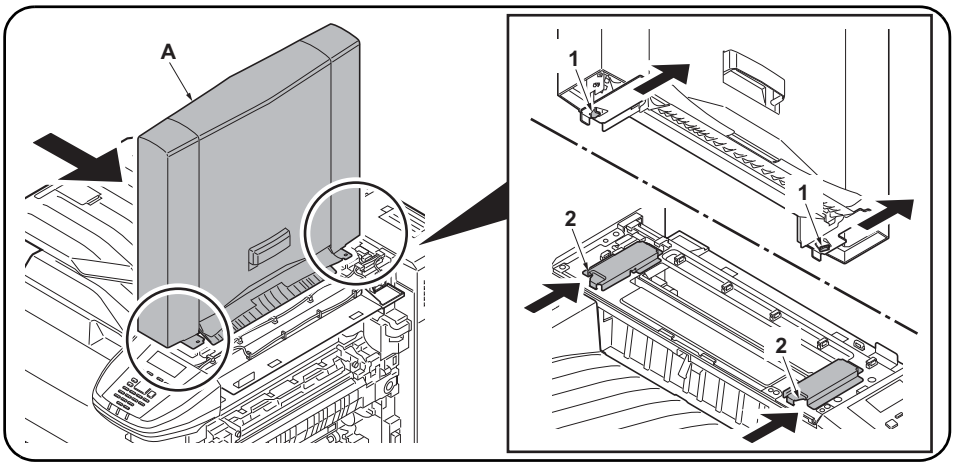

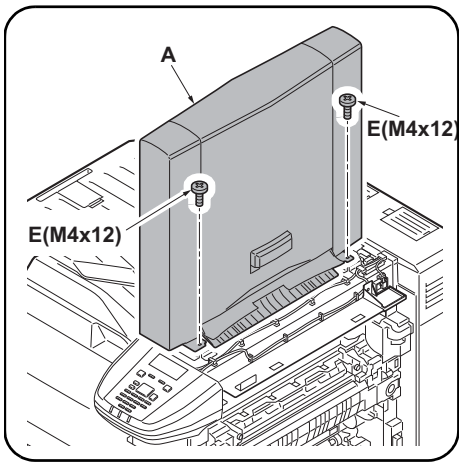

1. Insert the hooks (1) located at the front and rear of the bottom of the mailbox (A) into the notches (2) of the machine and attach the mailbox (A) to the machine.
Note
Lift the front and rear of the mailbox (A) lightly upward to make sure that no gap is made between the mailbox (A) and the machine.

2. Secure the mailbox (A) using the two screws M4x12 (E).

---

1. Insérer les crochets (1) situés à l'avant et à l'arrière du fond de la boîte à lettres (A) dans les encoches (2) de la machine et fixer la boîte aux lettres (A) à la machine.
Remarque
Lever légèrement l'avant et l'arrière de la boîte à lettres (A) de sorte qu'il n'y ait aucun interstice entre la boîte à lettres (A) et la machine.

2. Fixer la boîte à lettres (A) à l'aide de deux vis M4x12 (E).

---

1. Inserte los enganches (1) que se encuentran en la parte frontal y trasera de la parte inferior del buzón de correo (A) en las hendiduras (2) de la máquina y acople el buzón de correo (A) a la máquina.
Nota
Levante ligeramente la parte frontal y trasera del buzón de correo (A) para asegurarse de que no queda espacio entre el buzón de correo (A) y la máquina.

2. Fije el buzón de correo (A) con dos tornillos M4x12 (E).

---

1. Führen Sie die Haken (1), die sich hinten und vorne an der Unterseite der Mailbox (A) befinden, in die Aufnahmen (2) des Geräts ein und befestigen Sie die Mailbox (A) am Gerät.
Hinweis
Heben Sie die Vorder- und Rückseite der Mailbox (A) ein wenig an, damit sich kein Spalt zwischen der Mailbox (A) und dem Gerät bildet.

2. Sichern Sie die Mailbox (A) mit zwei Schrauben M4x12 (E).

---

1. Inserire i ganci (1) posti sul fronte e sul retro della sezione inferiore della mailbox (A) negli incavi (2) presenti sulla macchina e fissare la mailbox (A) sulla macchina.
Nota
Sollevare leggermente la parte anteriore e posteriore della mailbox (A) verso l'alto per accertarsi che non vi sia dello spazio tra la mailbox (A) e la macchina.

2. Fissare la mailbox(A) utilizzando le due viti M4x12 (E).

---

1. 将位于邮箱（A）底部前、后侧的挂钩（1）插入机器的凹槽（2），然后将邮箱（A）安装至机器。
注
轻轻向上提升邮箱（A）的前后侧，确保邮箱（A）未处于悬浮状态。

2. 使用两个螺丝 M4x12（E）固定邮箱（A）。

---

1. 메일박스 (A) 의 전후면 하단에 있는 후크 (1) 를 본체의 노치 (2) 에 삽입하여 메일박스 (A) 를 본체에 부착합니다 .
주
메일박스 (A) 의 앞뒤를 각각 상방향으로 가볍게 들어 메일박스 (A) 가 떠 있지 않은 것을 확인합니다 .

2. M4x12 나사 (E) 두 개를 사용하여 메일박스 (A) 를 고정합니다 .

---

1. メールボックス（A）下部の前後にあるフック（1）を機械本体の切り欠き（2）に挿入し、メールボックス（A）を機械本体に取り付ける。
注意
メールボックス（A）の前後をそれぞれ上方向に軽く持ち上げ、メールボックス（A）が浮かないことを確認する。

2. ビス M4×12(E)2 本で、メールボックス（A）を固定する。

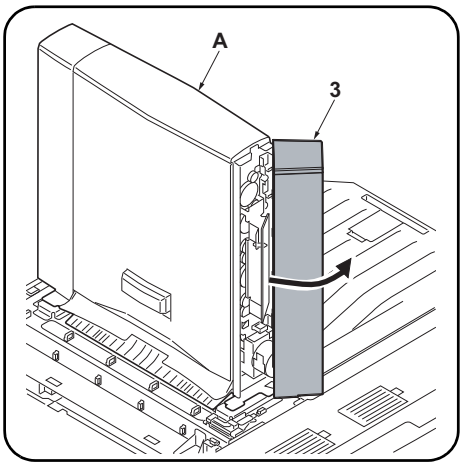

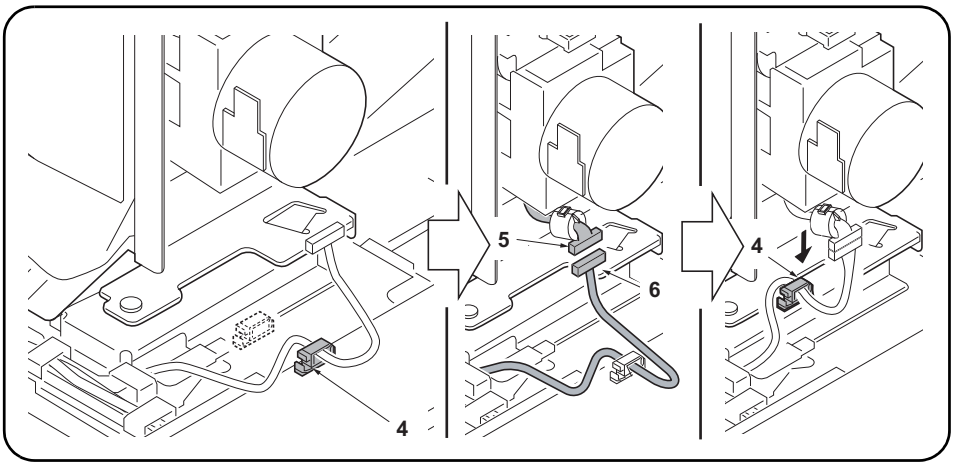

3. Remove the rear cover (3) of the mailbox (A).

4. Remove the wire saddle (4).
5. Plug the connector (5) of the mailbox (A) into the connector (6) of the machine body.
6. Install the wire saddle (4) in the position as shown in the figure.
7. Reinstall the rear cover (3) of the mailbox (A).

---

3. Retirer le couvercle arrière (3) de la boîte à lettres (A).

4. Retirer le serre-câble (4).
5. Brancher le connecteur (5) de la boîte à lettres (A) dans le connecteur (6) du corps de la machine.
6. Installer le serre-câble (4) dans la position illustrée sur la figure.
7. Remonter le couvercle arrière (3) de la boîte à lettres (A).

---

3. Quite la cubierta posterior (3) del buzón de correo (A).

4. Retire la abrazadera del cable (4).
5. Enchufe el conector (5) del buzón de correo (A) al conector (6) del cuerpo de la máquina.
6. Instale la abrazadera del cable (4) en la posición que se muestra en la imagen.
7. Vuelva a instalar la cubierta posterior (3) del buzón de correo (A).

---

3. Entfernen Sie die hintere Abdeckung (3) der Mailbox (A).

4. Entfernen Sie die Kabelbefestigung (4).
5. Stecken Sie den Stecker (5) der Mailbox (A) in die Steckbuchse (6) des Gerätegehäuses.
6. Installieren Sie die Kabelbefestigung (4) an der im Bild gezeigten Position.
7. Bringen Sie die hintere Abdeckung (3) der Mailbox (A) wieder an.

---

3. Rimuovere il coperchio posteriore (3) della mailbox (A).

4. Rimuovere l'unità sella (4).
5. Collegare il connettore (5) della mailbox (A) al connettore (6) del corpo macchina.
6. Installare l'unità sella (4) nella posizione indicata in figura.
7. Reinstallare il coperchio posteriore (3) della mailbox (A).

---

3. 拆下邮箱（A）的后部盖板（3）。

4. 取下束线夹（4）。
5. 将邮箱（A）的接插件（5）插入机器的接插件（6）。
6. 把束线夹（4）安装到图示位置。
7. 重新安装邮箱（A）的后盖板（3）。

---

3. 메일박스 (A) 의 뒤커버 (3) 를 떼어냅니다 .

4. 와이어 새들 (4) 을 분리합니다 .
5. 메일박스 (A) 의 커넥터 (5) 를 본체의 커넥터 (6) 에 연결합니다 .
6. 와이어 새들 (4) 을 그림에 표시된 위치에 설치합니다 .
7. 메일박스 (A) 의 뒤커버 (3) 를 다시 장착합니다 .

---

3. メールボックス (A) の後カバー(3) を取り外す。

4. ワイヤーサドル (4) を外す。
5. メールボックス (A) のコネクター(5) を機械本体のコネクター (6) に接続する。
6. ワイヤーサドル (4) を図の位置に取り付ける。
7. メールボックス (A) の後カバー(3) を元通りに取り付ける。

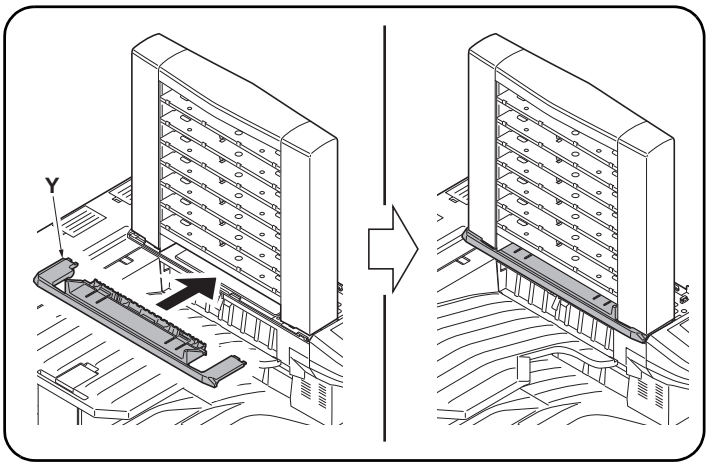

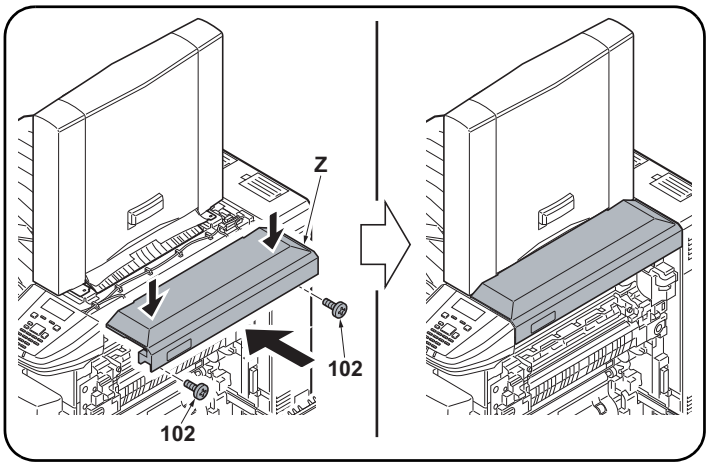

8. Install the left cover (Y) in place.

9. Using the two screws (102) removed in step 2 in the installation guide for the AK-736, install the right cover (Z).
*While pressing the right cover(Z) downwards, fix the right cover(J).

---

8. Monter le couvercle gauche (Y) en position.

9. À l'aide des deux vis (102) retirées à l'étape 2 du guide d'installation pour l'AK-736, installer le capot droit (Z).
*Fixer le capot droit (Z) en le maintenant enfoncé vers le bas.

---

8. Instale la cubierta izquierda (Y) en la ubicación prevista.

9. Con los dos tornillos (102) que quitó en el paso 2 de la guía de instalación para AK-736, instale la cubierta derecha (Z).
*A la vez que ejerce presión sobre la cubierta derecha (Z), fije la cubierta derecha (Z).

---

8. Installieren Sie die linke Abdeckung (Y).

9. Mit den zwei Schrauben (102), die Sie in Schritt 2 der Installationsanleitung für das AK-736 entfernt haben, bringen Sie die rechte Abdeckung (Z) wieder an.
*Drücken Sie die rechte Abdeckung (Z) leicht nach unten, während Sie diese befestigen.

---

8. Installare il coperchio di sinistra (Y) in posizione.

9. Utilizzando le due viti (102) rimosse al punto 2 della procedura descritta nella guida di installazione del kit AK-736, installare il coperchio destro (Z).
*Premere verso il basso il coperchio destro (Z) per fissarlo in posizione.

---

8. 将左盖板（Y）安装到位。

9. 请用 AK-736 安装手册步骤 2 中取下的 2 颗螺丝（102）来安装右盖板（Z）。
＊把右盖板（Z）边向下按，边固定。

---

8. 좌측 커버 (Y) 를 제자리에 장착합니다 .

9. AK-736 설치 설명서의 2 단계에서 분리한 나사 (102) 두 개를 사용하여 우측 커버 (Z) 를 장착합니다 .
＊우측 커버 (Z) 를 아래쪽으로 누르는 동시에 우측 커버 (Z) 를 고정하십시오 .

---

8. 左カバー(Y) を取り付ける。

9. AK-736 設置手順書の手順 2 で外したビス (102)2 本で、右カバー(Z) を取付ける。
＊右カバー(Z) を下方向に押さえながら、固定する。

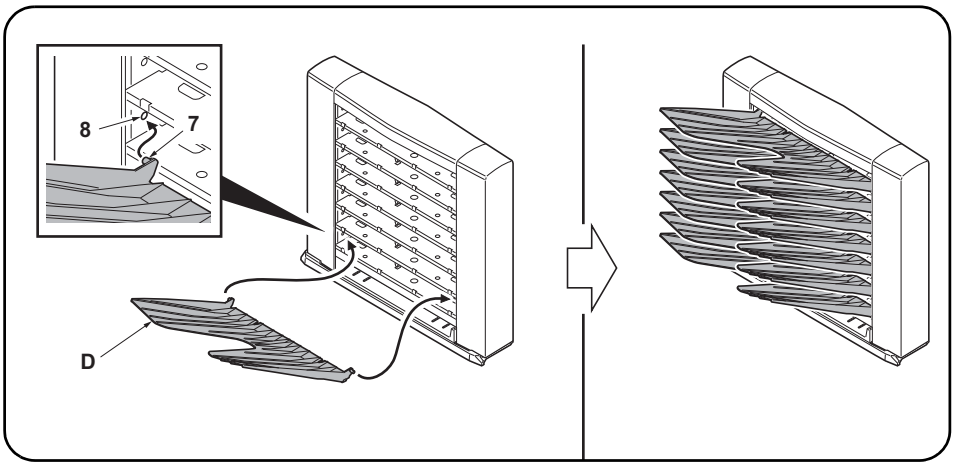

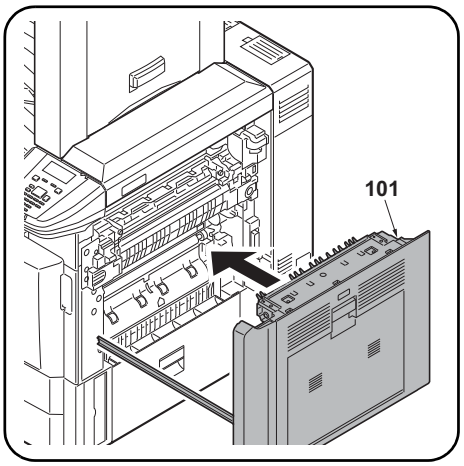

10. Fit the seven copy eject bins (D) to the ejection section of the mailbox (A) from the lowest bin to the highest.
Press both ends of each copy eject bin (D) to bend it a little, then fit the bin by inserting the front and rear pins (7) into the round holes (8) at the front and rear of the mailbox.

11. Close the paper conveying unit(101).
12. Insert the power plug from the machine into the outlet, turn the main power switch on, and verify the machine operates normally.

---

10. Fixer les sept cases d'éjection de copies (D) sur la section d'éjection de la boîte à lettres (A), en procédant de la case située tout en bas à celle située tout en haut.
Appuyer sur les deux extrémités de chaque case d'éjection des copies (D) pour cintrer légèrement cette pièce, puis monter la case en insérant les broches avant et arrière (7) dans les trous ronds (8) à l'avant et à l'arrière de la boîte à lettres.

11. Fermer l'unité de transport du papier (101).
12. Insérer la fiche d'alimentation de la machine dans la prise et mettre la machine sous tension, puis vérifier qu'elle fonctionne correctement.

---

10. Presione ambos extremos de cada bandeja de expulsión de copias (D) para doblarlas un poco; después, coloque la bandeja insertando los pasadores delantero y trasero (7) en los orificios redondos (8) en la parte frontal y posterior del buzón de correo.

11. Cierre la unidad de transporte de papel(101).
12. Enchufe el cable de alimentación de la máquina en la toma de corriente y encienda el interruptor principal para comprobar que la máquina funciona correctamente.

---

10. Setzen Sie die sieben Kopienausgabefächer (D) in die Ausgabeöffnungen der Mailbox (A) ein, beginnend vom untersten Fach zum höchsten.
Drücken Sie beide Enden jedes Kopienausgabefachs (D) zusammen, um es etwas zu biegen. Setzen Sie das Fach ein, indem Sie die vorderen und hinteren Stifte (7) in die Rundlöcher (8) vorne und hinten an der Mailbox einsetzen.

11. Schließen Sie die Papierführung (101).
12. Stecken Sie den Netzstecker des Geräts in eine Steckdose und schalten Sie den Hauptschalter des Geräts ein, um den Betrieb zu prüfen.

---

10. Installare i sette scomparti di espulsione delle copie (D) nella sezione di espulsione della mailbox (A), iniziando dallo scomparto più in basso fino a quello più in alto.
Premere le due estremità di ciascuno scomparto di espulsione delle copie (D) in modo da piegarlo leggermente, quindi installare lo scomparto inserendo i perni anteriore e posteriore (7) nei fori rotondi (8) presenti sul fronte e sul retro della mailbox.

11. Chiudere l'unità trasporto carta (101).
12. Inserire la spina nella presa di corrente, accendere la macchina e controllare che funzioni correttamente.

---

10. 从邮箱（A）的排出部下面起按顺序安装 7 个接纸盘（D）。
按住接纸盘（D）的左右两侧并使其稍稍下垂，通过将前后的销钉（7）插入邮箱前后的圆孔（8）中来安装接纸盘。

11. 关闭纸张传输单元（101）。
12. 将机器的电源插头插入插座，然后打开主电源开关并确认机器能否正常操作。

---

10. 배출핀 (D) 7 개를 메일박스 (A) 의 배출부에 밑에서부터 순서대로 장착합니다 .
배출핀 (D) 의 좌우를 밀어 조금 휘게해 앞뒤의 핀 (7) 을 메일박스의 앞뒤의 둥근 구멍 (8) 에 삽입합니다 .

11. 반송 유니트 (101) 를 닫습니다 .
12. 기기본체의 전원 플러그를 콘센트에 꼽고 주전원 스위치를 ON 으로 해서 동작을 확인 합니다 .

---

10. 排出ビン (D)7 枚をメールボックス (A) の排出部に下から順番に取り付ける。
排出ビン (D) の左右を押し少したわませ、前後のピン (7) をメールボックスの前後の丸穴 (8) に挿入する。

11. 搬送ユニット (101) を閉じる。
12. 機械本体の電源プラグをコンセントに差し込み、主電源スイッチを ON にして動作を確認する。

MEMO

303N05673001

2012. 4
303N056730-01

INSTALLATION GUIDE FOR PUNCH UNIT

INSTALLATION GUIDE

GUIDE D’INSTALLATION

GUÍA DE INSTALACION

INSTALLATIONSANLEITUNG

GUIDA ALL’INSTALLAZIONE

安装手册

설치안내서

設置手順書

PH-7A/PH-7B/PH-7C/PH-7D

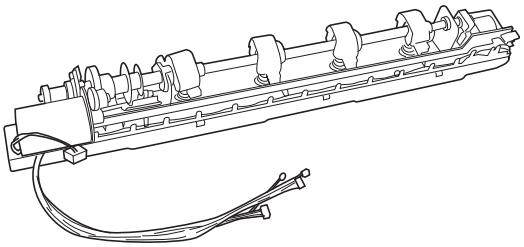

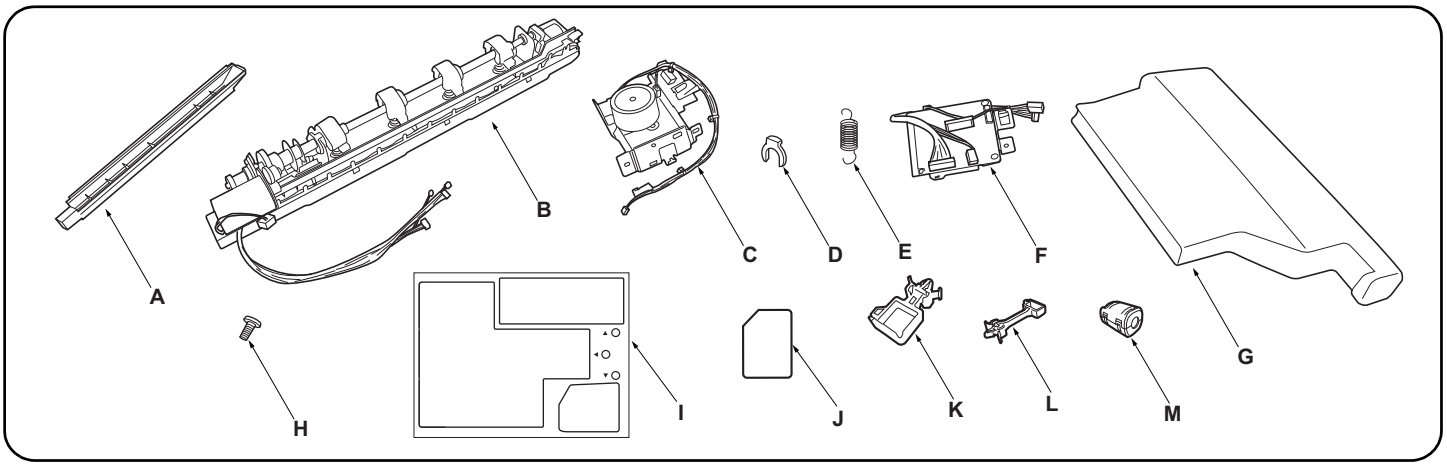

English

Supplied parts

A. Punch guide 1
B. Hole punch unit 1
C. Motor unit 1
D. Stop ring 1
E. Spring 1
F. Punch PWB 1
G. Waste hole punch box 1
H. M3 × 8 tap Tight S screw 3
I. Label sheet 1
J. Film 1
K. Small clamp (for DF-770) 1
L. Large clamp (for DF-790/DF-791) 1
M. Ferrite core 1

Be sure to remove any tape and/or cushioning material from supplied parts.

Français

Pièces fournies

A. Guide de perforatrice 1
B. Perforatrice 1
C. Moteur 1
D. Bague d'arrêt 1
E. Ressort 1
F. PWB de la perforatrice 1
G. Bac de récupération de la perforatrice 1
H. Vis S taraudée M3 × 8 3
I. Feuillet d'étiquettes 1
J. Film 1
K. Petit collier (pour DF-770) 1
L. Grand collier (pour DF-790/DF-791) 1
M. Noyau de ferrite 1

Veillez à retirer les morceaux de bande adhésive et/ou les matériaux de rembourrage des pièces fournies.

Español

Partes suministradas

A. Guía de perforación 1
B. Perforadora 1
C. Unidad motriz 1
D. Anillo de tope 1
E. Resorte 1
F. PWB de perforación 1
G. Caja para desechos de la perforación 1
H. Tornillo de ajuste M3 × 8 3
I. Hoja con etiqueta 1
J. Película 1
K. Sujetador pequeño (para DF-770) 1
L. Sujetador grande (para DF-790/DF-791) 1
M. Núcleo de ferrita 1

Asegúrese de despegar todas las cintas y/o material amortiguador de las partes suministradas.

Deutsch

Gelieferte Teile

A. Locherführung 1
B. Lochereinheit 1
C. Motoreinheit 1
D. Anschlagring 1
E. Feder 1
F. Locher-PWB 1
G. Lochungsabfallbehälter 1
H. M3 × 8 Passstift-Verbundschrauben 3
I. Aufkleberbogen 1
J. Film 1
K. Kleine Klemme (für DF-770) 1
L. Große Klemme (für DF-790/DF-791) 1
M. Ferritkern 1

Entfernen Sie Klebeband und/oder Dämpfungsmaterial vollständig von den mitgelieferten Teilen.

Italiano

Parti di fornitura

A. Guida perforazione 1
B. Unità di perforazione 1
C. Unità motore 1
D. Anello di bloccaggio 1
E. Molla 1
F. Scheda a circuiti stampati di perforazione 1
G. Scarto perforazione 1
H. Viti con testa a croce S M3 × 8 3
I. Foglio di etichette 1
J. Pellicola 1
K. Morsetto piccolo (per DF-770) 1
L. Morsetto grande (per DF-790/DF-791) 1
M. Nucleo di ferrite 1

Accertarsi di rimuovere tutti i nastri adesivi e/o il materiale di imbottitura dalle parti fornite.

简体中文

附属品

A. 打孔导向板 1
B. 打孔单元 1
C. 电机单元 1
D. 止动环 1
E. 弹簧 1
F. 打孔单元电路板 1
G. 打孔纸屑盒 1
H. M3 X 8 攻丝紧固型 S 螺丝 3
I. 标签纸 1
J. 胶片 1
K. 固定夹 小（DF-770 用） 1
L. 固定夹 大（DF-790/DF-791 用） 1
M. 磁环 1

如果附属品上带有固定胶带，缓冲材料时务必揭下。

한국어

동봉품

A. 펀치가이드 1
B. 펀치유니트 1
C. 모터유니트 1
D. 스톱링 1
E. 스프링 1
F. 펀치기판 1
G. 펀치폐기박스 1
H. 나사 M3×8 탭타이트 S 3
I. 라벨 시트 1
J. 필름 1
K. 클램프 소 (DF-770 용) 1
L. 클램프 대 (DF-790/DF-791 용) 1
M. 페라이트 코어 1

동봉품에 고정 테이프 , 완충재가 붙어 있는 경우에는 반드시 제거할 것 .

日本語

同梱品

A. パンチガイド 1
B. パンチユニット 1
C. モーターユニット 1
D. ストップリング 1
E. バネ 1
F. パンチ基板 1
G. パンチくずボックス 1
H. ビス M3×8 タップタイト S 3
I. ラベルシート 1
J. フィルム 1
K. クランプ小(DF-770 用) 1
L. クランプ大(DF-790/DF-791 用) 1
M. フェライトコア 1

同梱品に固定テープ、緩衝材が付いている場合は必ず取り外すこと。

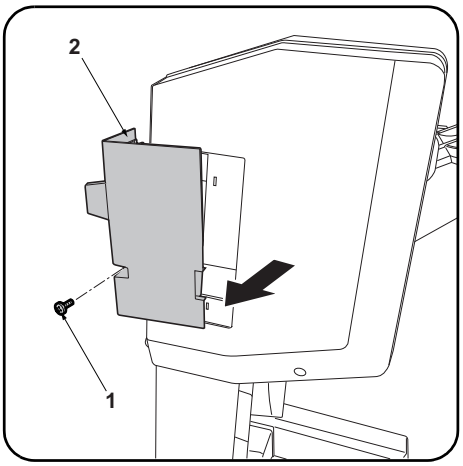

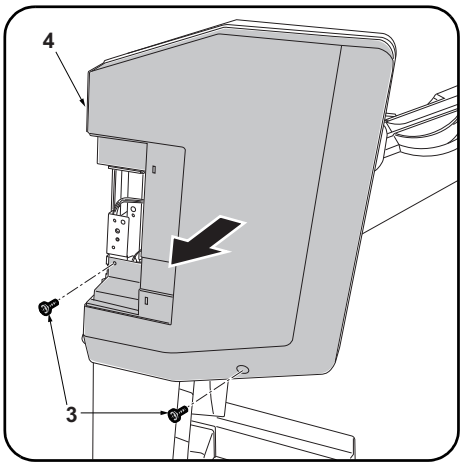

Procedure
Before installing the hole punch unit, make sure the MFP's main power switch is turned off and that its power cord is unplugged from the power outlet.
Install the document finisher first and then install the hole punch unit.

Removing the cover (DF-770)
If installing on the DF-790/DF-791, proceed to step 1 on page 3.
1. Remove the screw (1) and remove the small rear cover (2).
2. Remove the 2 screws (3) and remove the upper rear cover (4).

Procédure
Avant d'installer la perforatrice, s'assurer que l'interrupteur d'alimentation principal du MFP est hors tension et que le câble d'alimentation est débranché de la prise secteur.
Installer d'abord le finisseur de document, puis installer la perforatrice.

Dépose du couvercle (DF-770)
Pour l'installation sur le modèle DF-790/DF-791, passer à l'étape 1 de la page 3.
1. Déposer la vis (1) et déposer le petit couvercle arrière (2).
2. Déposer les 2 vis (3) et déposer le couvercle supérieur arrière (4).

Procedimiento
Antes de instalar la perforadora, asegúrese de que el interruptor principal de la alimentación del MFP esté desconectado y de que el cable de alimentación esté desenchufado de la toma de corriente de la pared.
Instale primero el finalizador de documentos y luego instale la perforadora.

Extracción de la cubierta (DF-770)
Si realiza la instalación en el DF-790/DF-791, vaya al paso 1 de la página 3.
1. Quite el tornillo (1) y, después, quite la cubierta trasera pequeña (2).
2. Quite los 2 tornillos (3) y, después, quite la cubierta trasera superior (4).

Verfahren
Bevor Sie mit dem Einbau der Lochereinheit beginnen, stellen Sie sicher, dass der Hauptschalter des Kopierers ausgeschaltet und das Netzkabel aus der Steckdose gezogen ist.
Bringen Sie den Dokument-Finisher zuerst und dann erst die Lochereinheit an.

Entfernen der Abdeckung (DF-770)
Zur Installation des DF-790/DF-791 weitergehen zu Schritt 1 auf Seite 3.
1. Die Schraube (1) entfernen und die kleine hintere Abdeckung (2) abnehmen.
2. Die 2 Schrauben (3) entfernen und die obere hintere Abdeckung (4) abnehmen.

Procedura
Prima di installate l'unità di perforazione, assicurarsi che l'interruttore principale dell'MFP sia spento e che il cavo di alimentazione sia scollegato dalla presa di corrente.
Installare prima la finitrice e poi procedere all'installazione dell'unità di perforazione.

Rimozione del coperchio (DF-770)
Se si installa sull'unità DF-790/DF-791, procedere al passo 1 a pagina 3.
1. Rimuovere la vite (1) e quindi rimuovere il pannello posteriore piccolo (2).
2. Rimuovere le 2 viti (3) e quindi rimuovere il pannello superiore posteriore (4).

安装步骤
安装打孔单元时，必须事先关闭 MFP 主机的主电源开关，并拔下电源插头后再进行作业。
首先安装装订器，然后安装打孔单元。

拆下盖板（DF-770 时）
安装到 DF-790/DF-791 上时，跳至 P3 的步骤 1。
1. 拆除 1 颗螺丝 (1)，拆下后部小盖板 (2)。
2. 拆除 2 颗螺丝 (3)，拆下后上部盖板 (4)。

설치순서
펀치유니트를 부착할 때에는 반드시 MFP 본체의 주 전원 스위치를 OFF 로 하고 전원플러그를 뺀 다음 작업을 할 것 .
문서 피니셔를 설치 후 , 펀치유니트를 설치 할 것 .

커버제거 (DF-770 의 경우)
DF-790/DF-791 에 장착하는 경우에는 P3 의 순서 1 로 진행합니다 .
1. 나사 (1) 1 개를 제거하고 뒷 소커버 (2) 를 제거합니다 .
2. 나사 (3) 2 개를 제거하고 뒷 상커버 (4) 를 제거합니다 .

取付手順
パンチユニットを設置するときは、必ず MFP 本体の主電源スイッチを OFF にし、電源プラグを抜いてから作業すること。
ドキュメントフィニッシャーを設置後、パンチユニットを設置すること。

カバーの取り外し（DF-770 の場合）
DF-790/DF-791 に装着の場合は、P3 の手順 1 へ進む。
1. ビス (1)1 本を外し、後小カバー(2) を取り外す。
2. ビス (3)2 本を外し、後上カバー(4) を取り外す。

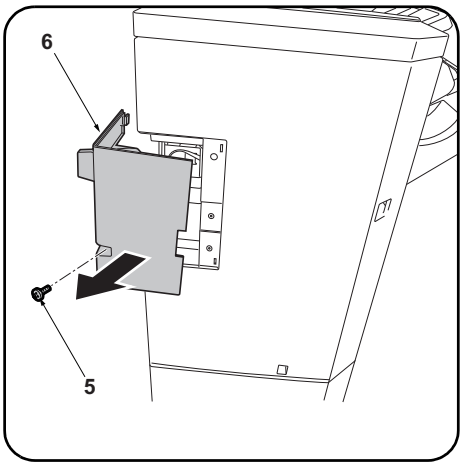

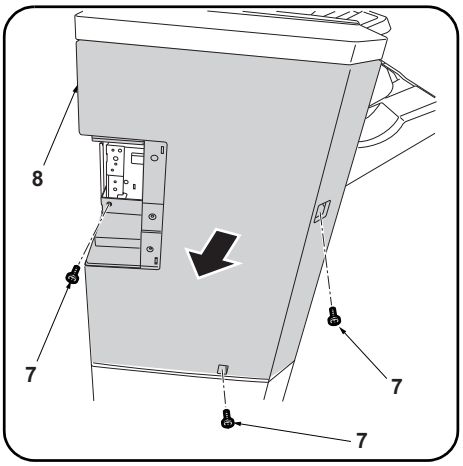

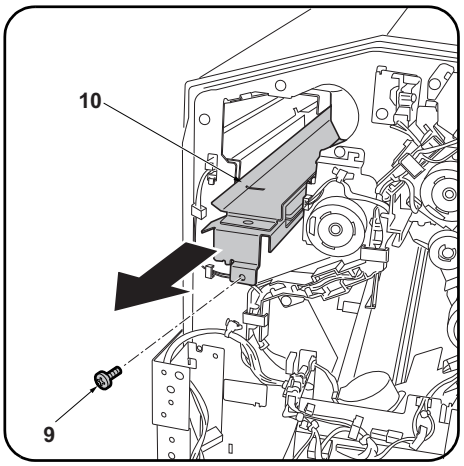

Removing the cover (DF-790/DF-791)

1. Remove the screw (5) and remove the small rear cover (6).

2. Remove the 3 screws (7) and remove the upper rear cover (8).

Installing the hole punch unit

3. Remove the screw (9) and pull the guide (10) outwards.

Dépose du couvercle (DF-790/DF-791)

1. Déposer la vis (5) et déposer le petit couvercle arrière (6).

2. Déposer les 3 vis (7) et déposer le couvercle supérieur arrière (8).

Installation de la perforatrice

3. Déposer la vis (9) et tirer le guide (10) vers l'extérieur.

Extracción de la cubierta (DF-790/DF-791)

1. Quite el tornillo (5) y, después, quite la cubierta trasera pequeña (6).

2. Quite los 3 tornillos (7) y, después, quite la cubierta trasera superior (8).

Instalación de la perforadora

3. Quite el tornillo (9) y tire de la guía (10) hacia fuera.

Entfernen der Abdeckung (DF-790/DF-791)

1. Die Schraube (5) entfernen und die kleine hintere Abdeckung (6) abnehmen.

2. Die 3 Schrauben (7) entfernen und die obere hintere Abdeckung (8) abnehmen.

Anbringen der Lochereinheit

3. Die Schraube (9) entfernen und die Führung (10) nach außen ziehen.

Rimozione del coperchio (DF-790/DF-791)

1. Rimuovere la vite (5) e quindi rimuovere il pannello posteriore piccolo (6).

2. Rimuovere le 3 viti (7) e quindi rimuovere il pannello superiore posteriore (8).

Installare l'unità di perforazione

3. Rimuovere la vite (9) ed estrarre la guida (10) verso l'esterno.

拆下盖板（DF-790/DF-791 时）

1. 拆除 1 颗螺丝（5），拆下后部小盖板（6）。

2. 拆除 3 颗螺丝（7），拆下后上部盖板（8）。

安装打孔单元

3. 拆除 1 颗螺丝（9），将导向板（10）向外拉出。

커버제거 (DF-790/DF-791 의 경우)

1. 나사 (5) 1 개를 제거하고 뒷 소커버 (6) 를 제거합니다 .

2. 나사 (7) 3 개를 제거하고 뒷 상커버 (8) 를 제거합니다 .

펀치유니트 부착

3. 나사 (9) 1 개를 제거하고 가이드 (10) 을 앞으로 끌어 당깁니다 .

カバーの取り外し(DF-790/DF-791 の場合)

1. ビス (5)1 本を外し、後小カバー(6) を取り外す。

2. ビス (7)3 本を外し、後上カバー(8) を取り外す。

パンチユニットの取り付け

3. ビス (9)1 本を外し、ガイド (10) を手前に引き出す。

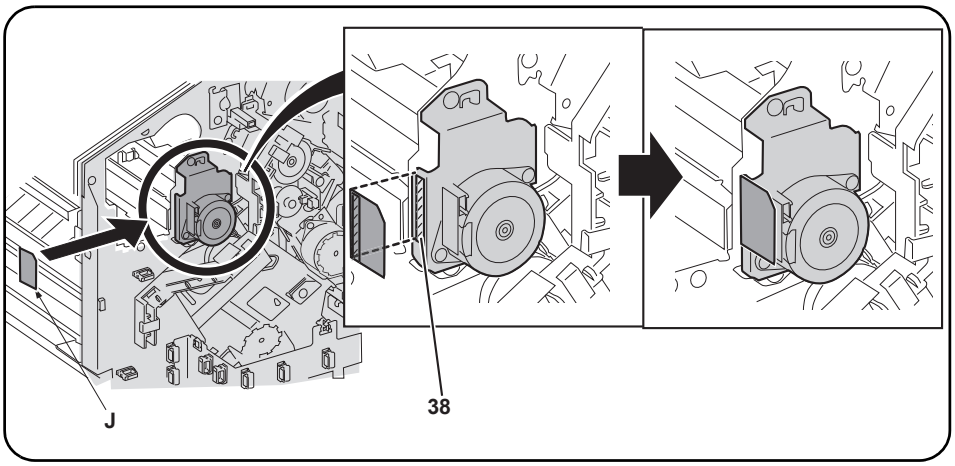

4. After using alcohol to clean the shaded portion (38) of the motor shown for adhering the film (J), adhere the film.

---

4. Après avoir utilisé de l'alcool pour nettoyer la partie du moteur hachurée (38) sur laquelle le film (J) est apposé, coller ce film.

---

4. Después de utilizar alcohol para limpiar la parte sombreada (38) del motor mostrada en la ilustración para pegar la película (J), pegue la película.

---

4. Den in der Abbildung grau dargestellten Teil (38) des Motors zum Anbringen des Films (J) mit Alkohol reinigen und dann den Film anbringen.

---

4. Dopo aver usato l'alcool per pulire la parte ombreggiata (38) del motore, illustrata per l'adesione della pellicola (J), far aderire la pellicola.

---

4. 用酒精清洁电机斜侧处（38）的粘贴位置后，粘贴胶片（J）。

---

4. 모터 사선부 (38) 의 부착위치를 알코올 청소 후 , 필름 (J) 을 부착합니다 .

---

4. モーター斜線部(38)の貼り付け位置をアルコール清掃後、フィルム(J)を貼り付ける。

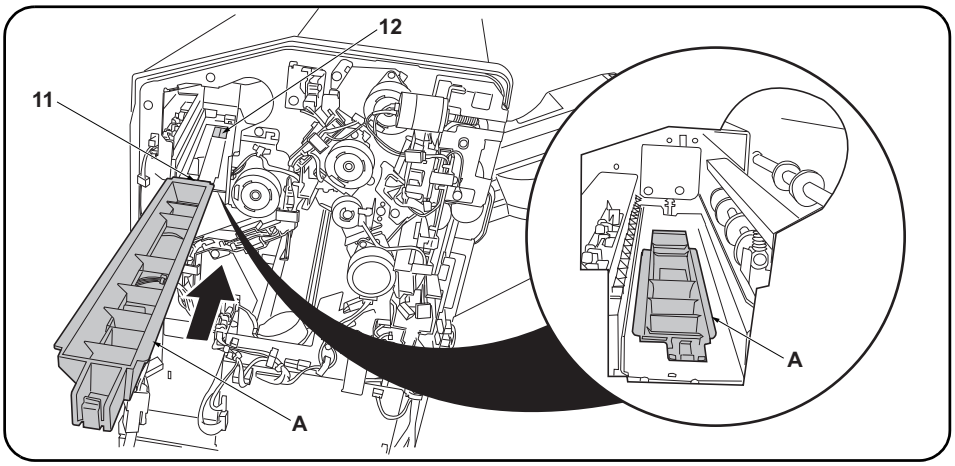

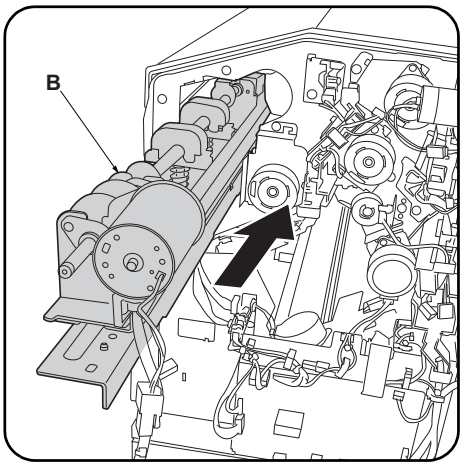

5. Install the punch guide (A) so that the leading edge of the guide (11) is below the document finisher frame (12).

6. Insert the hole punch unit (B) into the document finisher.

5. Monter le guide de la perforatrice (A) de sorte que le bord d'attaque du guide (11) se trouve sous le bâti du retoucheur de document (12).

6. Insérer la perforatrice (B) dans le retoucheur de document.

5. Instale la guía de perforación (A) de forma tal que el borde delantero de la guía (11) quede debajo de la carcasa del finalizador de documentos (12).

6. Inserte la perforadora (B) en el finalizador de documentos.

5. Die Locherführung (A) so einsetzen, dass die Vorderkante der Führung (11) unter dem Rahmen (12) des Dokument-Finishers liegt.

6. Die Lochereinheit (B) in den Dokument-Finisher einsetzen.

5. Installare la guida perforazione (A) in modo che il bordo principale della guida (11) sia sotto il telaio (12) della finitrice di documenti.

6. Inserire l'unità di perforazione (B) nella finitrice di documenti.

5. 将打孔导向板 (A) 的前端 (11) 安装在装订器的框架 (12) 的下部。

6. 将打孔单元 (B) 插入到装订器中。

5. 펀치가이드 (A) 의 끝 (11) 이 문서 피니셔의 프레임 (12) 밑으로 되도록 장착합니다 .

6. 펀치유니트 (B) 를 문서 피니셔에 삽입합니다 .

5. パンチガイド (A) の先端 (11) がドキュメントフィニッシャーのフレーム (12) の下になるように取り付ける。

6. パンチユニット (B) をドキュメントフィニッシャーに挿入する。

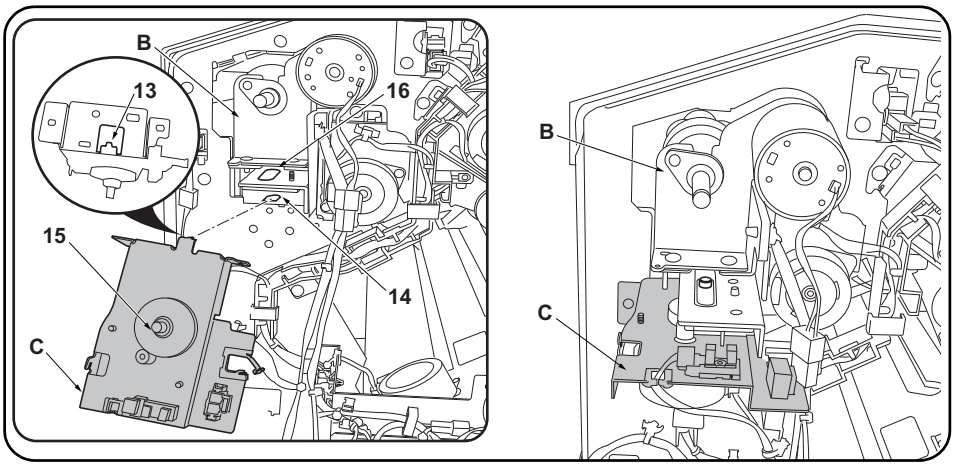

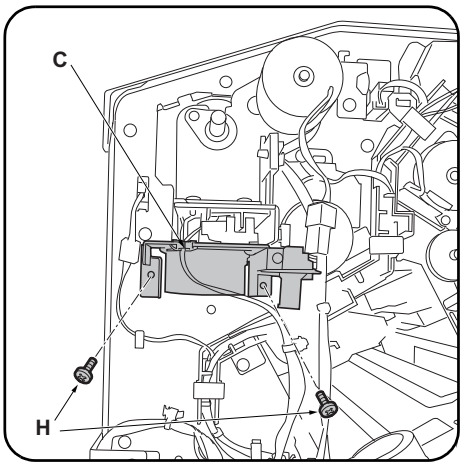

7. Raise the hole punch unit (B) slightly and fit the hook (13) on the motor unit (C) into the groove (14) in the document finisher. At the same time, insert the rod (15) on the motor unit (C) into the hole (16) in the hole punch unit (B).

8. Secure the motor unit (C) with the 2 screws (H).

---

7. Lever légèrement la perforatrice (B) et insérer le crochet (13) du moteur (C) dans la rainure (14) du retoucheur de document. Insérer en même temps la tige (15) du moteur (C) dans le trou (16) de la perforatrice (B).

8. Fixer le moteur (C) à l'aide de 2 vis (H).

---

7. Levante ligeramente la perforadora (B) y encaje el gancho (13) de la unidad motriz (C) en la ranura (14) del finalizador de documentos. Al mismo tiempo, inserte la varilla (15) de la unidad motriz (C) en el orificio (16) de la perforadora (B).

8. Asegure la unidad motriz (C) con los 2 tornillos (H).

---

7. Die Lochereinheit (B) leicht anheben und den Haken (13) an der Motoreinheit (C) in die Nut (14) des Dokument-Finishers einsetzen. Dabei auch die Stange (15) an der Motoreinheit (C) in die Öffnung (16) der Lochereinheit (B) einstecken.

8. Die Motoreinheit (C) mit den 2 Schrauben (H) sichern.

---

7. Sollevare leggermente l'unità di perforazione (B) ed inserire il gancio (13) sull'unità motore (C) nella scanalatura (14) della finitrice di documenti. Contemporaneamente, inserire l'asta (15) sull'unità motore (C) nel foro (16) dell'unità di perforazione (B).

8. Fissare l'unità motore (C) con le 2 viti (H).

---

7. 稍稍抬起打孔单元 (B)，将电机单元 (C) 的卡扣 (13) 嵌入装订器的沟槽 (14) 内。与此同时，将电机单元 (C) 的轴 (15) 插入打孔单元 (B) 的孔 (16) 中。

8. 使用 2 颗螺丝 (H) 来固定电机单元 (C)。

---

7. 펀치유니트 (B) 를 조금 들면서 모터유니트 (C) 후크 (13) 를 문서 피니셔의 구 (14) 에 꽂습니다 . 이것과 동시에 모터유니트 (C) 의 축 (15) 을 펀치유니트 (B) 구멍 (16) 에 삽입합니다 .

8. 나사 (H) 2 개로 모터유니트 (C) 를 고정합니다 .

---

7. パンチユニット (B) を少し持ち上げながら、モーターユニット (C) のフック (13) をドキュメントフィニッシャーの溝 (14) にはめ込む。これと同時に、モーターユニット (C) の軸 (15) をパンチユニット (B) の穴 (16) に挿入する。

8. ビス (H)2 本で、モーターユニット (C) を固定する。

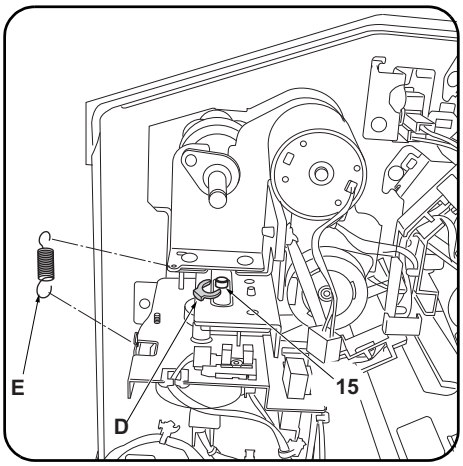

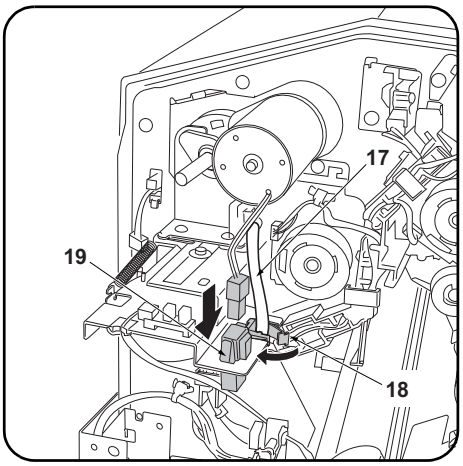

9. Fit the stop ring (D) over the motor unit rod (15) and fit the spring (E) between the hole punch unit and motor unit.

10. Run the hole punch unit wire (17) through the motor unit edging (18).

11. Plug the wire from the hole punch unit motor into the connector on the motor unit (19).

---

9. Monter la bague d'arrêt (D) sur la tige du moteur (15) et insérer le ressort (E) entre la perforatrice et le moteur.

10. Faire passer le câble de la perforatrice (17) dans le passage de câbles du moteur (18)

11. Raccorder le câble du moteur de la perforatrice au connecteur du moteur (19).

---

9. Coloque el anillo de tope (D) sobre la varilla de la unidad motriz (15) y coloque el resorte (E) entre la perforadora y la unidad motriz.

10. Tienda el cable de la perforadora (17) a través de la pestaña de la unidad motriz (18).

11. Enchufe el cable del motor de la perforadora al conector de la unidad motriz (19).

---

9. Den Anschlagring (D) auf die Stange (15) der Motoreinheit setzen und die Feder (E) zwischen Lochereinheit und Motoreinheit einsetzen.

10. Das Kabel (17) der Lochereinheit durch den Kantenschutz (18) der Motoreinheit führen.

11. Das Kabel vom Motor der Lochereinheit an den Steckverbinder der Motoreinheit (19) anschließen.

---

9. Inserire l'anello di bloccaggio (D) sull'asta (15) dell'unità motore ed inserire molla (E) tra l'unità di perforazione e l'unità motore.

10. Far passare il cavo dell'unità di perforazione (17) attraverso il bordo (18) dell'unità motore.

11. Collegare il cavo dal motore dell'unità di perforazione nel connettore sull'unità motore (19).

---

9. 将止动环 (D) 嵌入到电机单元的轴 (15) 上，在打孔单元与电机单元之间安装弹簧 (E)。

10. 将打孔单元的电线 (17) 穿过电机单元的包边孔 (18)。

11. 将来自打孔单元的电机的电线与电机单元的接插件 (19) 相连接。

---

9. 모터유니트 축 (15) 에 스톱링 (D) 을 꽂고 펀치유니트와 모터유니트 사이에 스프링 (E) 을설치합니다 .

10. 펀치유니트의 전선 (17) 을 모터유니트의 에징 (18) 에 지나가게 합니다 .

11. 펀치유니트 모터에서의 전선을 모터유니트 커넥터 (19) 에 접속합니다 .

---

9. モーターユニットの軸 (15) にストップリング (D) をはめ､パンチユニットとモーターユニットの間にバネ (E) を取り付ける。

10. パンチユニットの電線 (17) をモーターユニットのエッジング (18) に通す。

11. パンチユニットのモーターからの電線をモーターユニットのコネクター(19) に接続する。

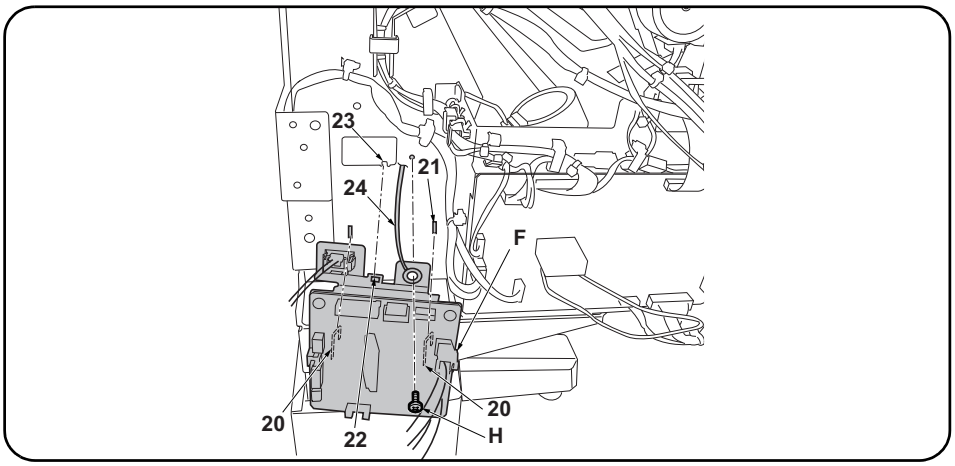

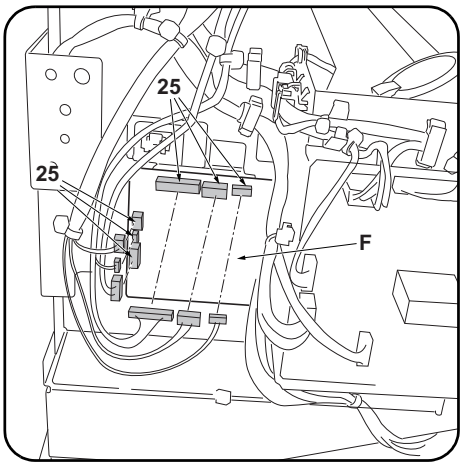

Installing the punch PWB and waste hole punch box (DF-770)
If installing on the DF-790/DF-791, proceed to step 12 on page 12.

12. Fit the 2 hooks (20) in the punch PWB (F) into the cut (21) in the document finisher. At the same time, insert the projection (23) on the document finisher into the hole (22) in the punch PWB (F).

13. Using the screw (H), tighten the hole punch unit ground wire (24) and the punch PWB (F) together.

14. Plug the 6 hole punch unit wires into the connectors (25) on the punch PWB (F).

Installation de la PWB de la perforatrice et du bac de récupération de la perforatrice (DF-770).
Pour une installation sur le modèle DF-790/DF-791, passer à l'étape 12 en page 12.

12. Insérer les 2 crochets (20) de la PWB de la perforatrice (F) dans la découpe (21) du retoucheur de document. Insérer en même temps la saillie (23) du retoucheur de document dans le trou (22) de la PWB de la perforatrice (F).

13. Fixer le câble de terre de la perforatrice (24) à la PWB de la perforatrice (F) à l'aide d'une vis (H).

14. Raccorder les 6 câbles de la perforatrice aux connecteurs (25) de la PWB de la perforatrice (F).

Instalación del PWB de perforación y la caja para desechos de la perforación (DF-770)
Si realiza la instalación en el DF-790/DF-791, vaya al paso 12 de la página 12.

12. Coloque los 2 ganchos (20) del PWB de perforación (F) en el corte (21) del finalizador de documentos. Al mismo tiempo, inserte el resalto (23) del finalizador de documentos en el orificio (22) del PWB de perforación (F).

13. Usando el tornillo (H), apriete juntos el cable de conexión a tierra de la perforadora (24) y el PWB de perforación (F).

14. Enchufe los 6 cables de la perforadora a los conectores (25) del PWB de perforación (F).

Installation der Locher-PWB und des Lochungsabfallbehälters (DF-770)
Zur Installation des DF-790/DF-791 weitergehen zu Schritt 12 auf Seite 12.

12. Die 2 Haken (20) in der Locher-PWB (F) in die Aussparung (21) am Dokument-Finisher einsetzen. Dabei auch den Vorsprung (23) am Dokument-Finisher in die Öffnung (22) auf der Locher-PWB (F) einsetzen.

13. Mit der Schraube (H) das Massekabel (24) der Lochereinheit an der Locher-PWB (F) festziehen.

14. Die 6 Kabel der Lochereinheit an die Steckverbinder (25) der Locher-PWB (F) anschließen.

Installazione della scheda a circuiti stampati di perforazione e dello scarto perforazione (DF-770)
Se si installa sull'unità DF-790/DF-791, procedere al passo 12 a pagina 12.

12. Inserire i 2 ganci (20) della scheda a circuiti stampati di perforazione (F) nell'intaglio (21) della finitrice di documenti. Contemporaneamente, inserire la sporgenza (23) sulla finitrice di documenti nel foro (22) della scheda a circuiti stampati di perforazione (F).

13. Utilizzando la vite (H), stringere insieme il cavo di terra (24) dell'unità di perforazione e la scheda a circuiti stampati di perforazione (F).

14. Collegare i 6 cavi dell'unità di perforazione nei connettori (25) sulla scheda a circuiti stampati di perforazione (F).

安装电路板与打孔纸屑盒（DF-770 时）
安装到 DF-790/DF-791 上时，跳至 P12 的步骤 12。
12. 将打孔电路板 (F) 的 2 个卡扣 (20) 挂在装订器的缺口 (21) 上。同时，将打孔电路板 (F) 的孔 (22) 卡入装订器的突出部 (23)。
13. 使用 1 颗螺丝 (H) 将打孔单元的接地线 (24) 与打孔电路板 (F) 一起固定。

14. 将打孔单元的 6 根电线与打孔电路板 (F) 的接插件 (25) 相连接。

기판과 펀치폐기박스의 부착 (DF-770 의 경우)
DF-790/DF-791 에 장착하는 경우에는 P12 의 순서 12 로 진행합니다 .
12. 펀치기판 (F) 의 후크 (20) 2 곳을 문서 피니셔의 구멍 (21) 에 겁니다 . 동시에 펀치기판 (F) 구멍 (22) 을 문서 피니셔의 돌기 (23) 에 넣습니다 .
13. 나사 (H) 1 개로 펀치유니트의 접지선 (24) 과 펀치기판 (F) 을 함께 조입니다 .

14. 펀치유니트의 전선 6 선을 펀치기판 (F) 커넥터 (25) 에 접속합니다 .

基板とパンチくずボックスの取り付け(DF-770 の場合)
DF-790/DF-791 に装着の場合は、P12 の手順 12 へ進む。
12. パンチ基板 (F) のフック (20)2 箇所をドキュメントフィニッシャーの切り欠き (21) に引っ掛ける。同時に、パンチ基板 (F) の穴 (22) をドキュメントフィニッシャーの突起 (23) に入れる。
13. ビス (H)1 本で、パンチユニットのアース線 (24) とパンチ基板 (F) を共締めする。

14. パンチユニットの電線 6 本を、パンチ基板 (F) のコネクター(25) に接続する。

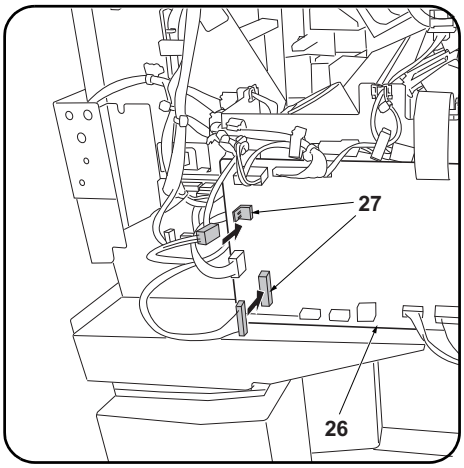

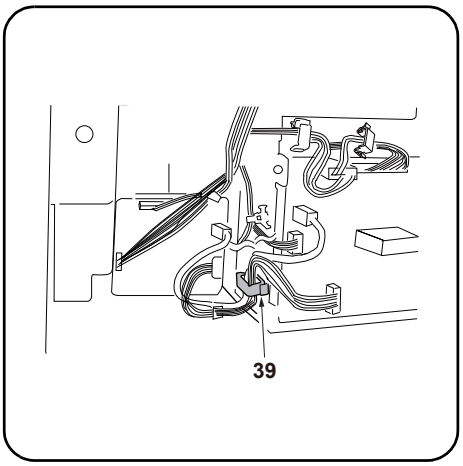

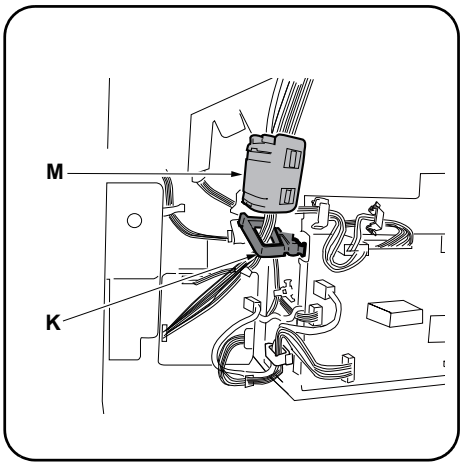

15. Plug the 2 punch PWB wires into the connectors (27) on the DF main PWB (26).

16. Fasten two wires which were connected in step 15 with the clamp (39).

17. Install the small clamp (K) on the finisher, then pass and fasten the wires from the motor unit and hole punch unit.

18. Attach the ferrite core (M) to the wire.

---

15. Raccorder les 2 câbles de la PWB de la perforatrice aux connecteurs (27) de la PWB principale du DF (26).

16. Attacher les deux fils qui ont été connectés à l'étape 15 avec le collier (39).

17. Monter le petit collier (K) sur le retoucheur puis faire passer les câbles du moteur et de la perforatrice dans ce collier pour les fixer en place.

18. Fixer le noyau en ferrite (M) au câble.

---

15. Enchufe los 2 cables del PWB de perforación a los conectores (27) del PWB principal del DF (26).

16. Apriete los dos cables que conectó en el paso 15 con la abrazadera (39).

17. Instale el sujetador pequeño (K) en el finalizador, después tienda y ajuste los cables de la unidad motriz y la perforadora.

18. Fije el núcleo de ferrita (M) al cable.

---

15. Die 2 Kabel der Locher-PWB an die Steckverbinder (27) der DF-Haupt-PWB (26) anschließen.

16. Befestigen Sie die beiden Kabel, die in Schritt 15 verbunden wurden, mit der Schelle (39).

17. Die kleine Klemme (K) am Finisher anbringen, dann die Kabel von der Motoreinheit und der Lochereinheit hindurchführen und befestigen.

18. Den Ferritkern (M) am Kabel befestigen.

---

15. Collegare i 2 cavi della scheda a circuiti stampati di perforazione nei connettori (27) sulla scheda principale PWB (26) della DF.

16. Fissare i due cavi collegati al punto 15 con il morsetto (39).

17. Installare il morsetto piccolo (K) sul finitore, e quindi passare e fissare i cavi dall'unità motore e dall'unità di perforazione.

18. Applicare il nucleo in ferrite (M) al cavo.

---

15. 将打孔电路板的 2 根电线与 DF 主电路板 (26) 的接插件 (27) 连接。

16. 使用固定夹 (39) 来固定步骤 15 中连接的 2 根电线。

17. 把小固定夹 (K) 安装在装订器上，从电机单元和打孔单元出来的导线穿过固定夹来固定。

18. 用磁环 (M) 套住导线。

---

15. 펀치기판의 전선 2 선을 DF 주 회로기판 (26) 의 커넥터 (27) 에 접속합니다 .

16. 순서 15 로 접속한 2 개의 전선을 클램프 (39) 로 고정해 주십시오 .

17. 클램프 소 (K) 를 피니셔에 장착 , 모터 유니트와 펀치 유니트에서부터 전선을 통과시키고 고정합니다 .

18. 페라이트 코어 (M) 를 전선으로 장착합니다 .

---

15. パンチ基板の電線 2 本を DF 主回路基板 (26) のコネクター(27) に接続する。

16. 手順 15 で接続した 2 本の電線をクランプ (39) で固定する。

17. クランプ小(K)をフィニッシャーに取り付け、モーターユニットとパンチユニットからの電線を通し、固定する。

18. フェライトコア(M)を電線に取り付ける。

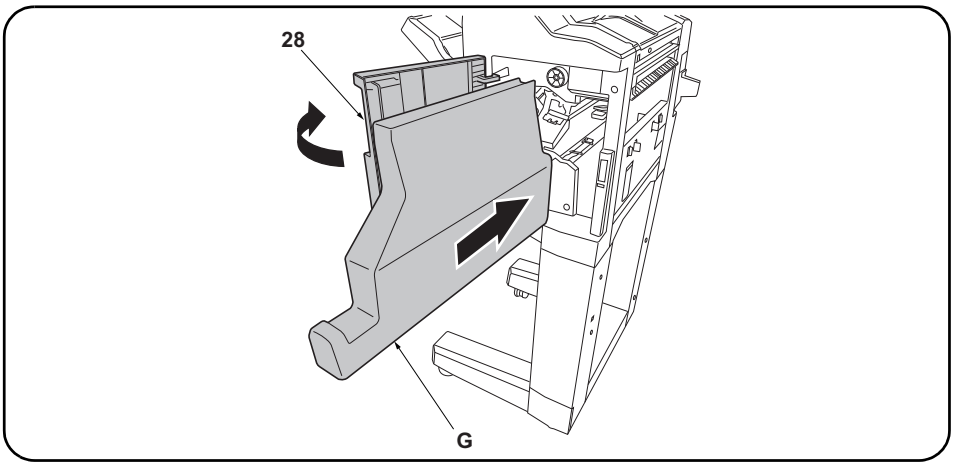

19. Replace the upper rear cover (4) and small rear cover (2).

20. Open the upper front cover (28) and insert the waste hole punch box (G).

---

19. Reposer le couvercle supérieur arrière (4) et le petit couvercle arrière (2).

20. Ouvrir le couvercle supérieur avant (28) et insérer le bac de récupération de la perforatrice (G).

---

19. Vuelva a colocar la cubierta trasera superior (4) y la cubierta trasera pequeña (2).

20. Abra la cubierta delantera superior (28) e inserte la caja para desechos de la perforación (G).

---

19. Die obere hintere Abdeckung (4) und die kleine hintere Abdeckung (2) wieder einsetzen.

20. Die obere vordere Abdeckung (28) öffnen und den Lochungsabfallbehälter (G) einsetzen.

---

19. Ricollocare il pannello superiore posteriore (4) e il pannello posteriore piccolo (2).

20. Aprire il pannello superiore anteriore (28) ed inserire lo scarto perforazione (G).

---

19. 按原样安装后上部盖板 (4) 与后部小盖板 (2)。

20. 打开前上部盖板 (28)，插入打孔纸屑盒 (G)。

---

19. 뒷 상커버 (4) 와 후 소커버 (2) 를 원래대로 부착합니다 .

20. 앞 상커버 (28) 를 열고 펀치폐기박스 (G) 를 삽입합니다 .

---

19. 後上カバー(4) と後小カバー(2) を元通り取り付ける。

20. 前上カバー(28) を開き、パンチくずボックス (G) を挿入する。

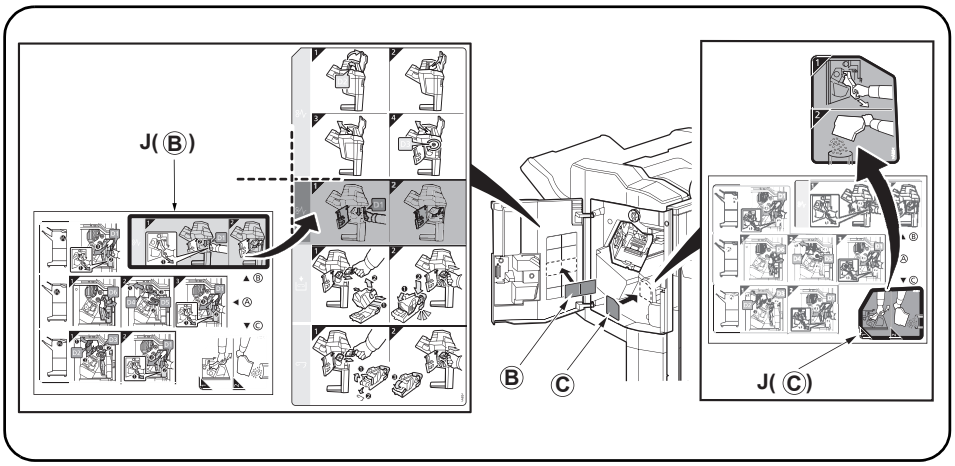

21. After cleaning each area with alcohol, adhere the following labels from the label sheet (J) at the locations shown in the illustration: B, C.

22. Close the upper front cover (28).

21. Après avoir nettoyé chaque zone à l'alcool, apposer les étiquettes suivantes du feuillet d'étiquettes (J) aux emplacements indiqués dans l'illustration : B, C.

22. Fermer le couvercle supérieur avant (28).

21. Después de limpiar todas las zonas con alcohol, despegue de la hoja de etiquetas (J) las etiquetas siguientes, y péguelas en los sitios que se indican en la ilustración: B, C.

22. Cierre la cubierta delantera superior (28).

21. Nachdem Sie alle Flächen mit Alkohol gereinigt haben, kleben Sie bitte die folgenden Aufkleber vom Aufkleberbogen (J) an die in der Abbildung angegebenen Stellen: B, C.

22. Die obere vordere Abdeckung (28) schließen.

21. Dopo aver pulito ciascuna zona con alcol, applicare le seguenti etichette del foglio di etichette (J) sui punti mostrati nell'illustrazione: B, C.

22. Chiudere il pannello superiore anteriore (28).

21. 用酒精清洁各区域后，请在如图所示位置粘贴从标签纸上（J）撕下的下列标签：B、C。

22. 关闭前上部盖板（28）。

21. 라벨 시트（Ｊ）내의 하기 라벨을 일러스트의 위치에 알코올청소 후 붙입니다：Ｂ，Ｃ．

22. 앞 상커버（28）를 닫습니다．

21. ラベルシート（J）内のB、Cをイラストの位置にアルコール清掃後貼り付ける。

22. 前上カバー（28）を閉じる。

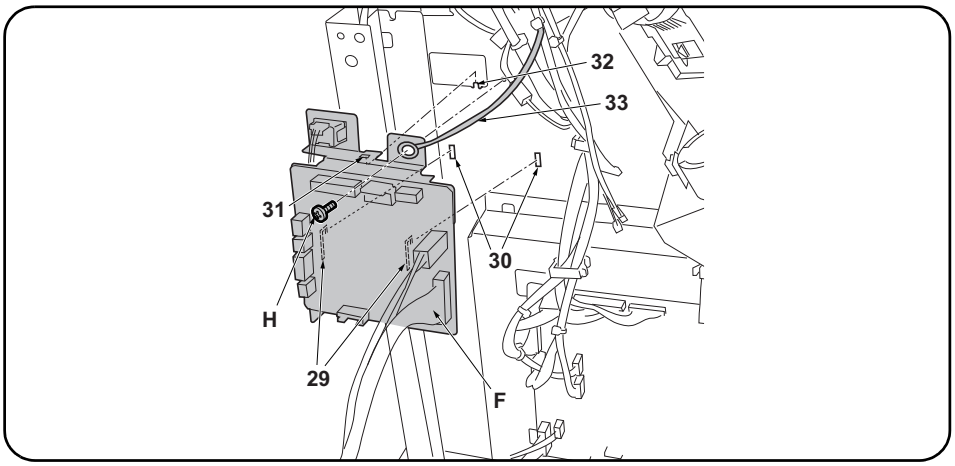

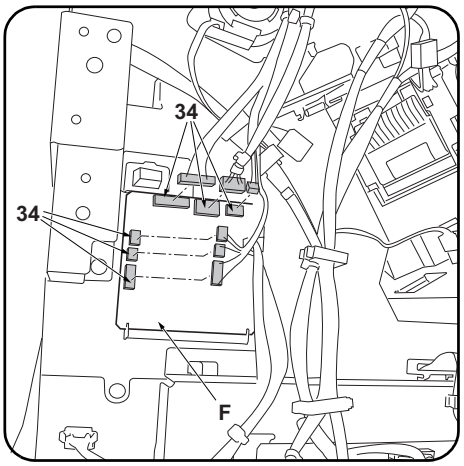

Installing the punch PWB and waste hole punch box (DF-790/DF-791)

12. Fit the 2 hooks (29) in the punch PWB (F) into the cut (30) in the document finisher. At the same time, insert the projection (32) on the document finisher into the hole (31) in the punch PWB (F).

13. Using the screw (H), tighten the hole punch unit ground wire (33) and the punch PWB (F) together.

14. Plug the 6 hole punch unit wires into the connectors (34) on the punch PWB (F).

Installation de la PWB de la perforatrice et du bac de récupération de la perforatrice (DF-790/DF-791).

12. Insérer les 2 crochets (29) de la PWB de la perforatrice (F) dans la découpe (30) du retoucheur de document. Insérer en même temps la saillie (32) du retoucheur de document dans le trou (31) de la PWB de la perforatrice (F).

13. Fixer le câble de terre de la perforatrice (33) à la PWB de la perforatrice (F) à l'aide d'une vis (H).

14. Raccorder les 6 câbles de la perforatrice aux connecteurs (34) de la PWB de la perforatrice (F).

Instalación del PWB de perforación y la caja para desechos de la perforación (DF-790/DF-791)

12. Coloque los 2 ganchos (29) del PWB de perforación (F) en el corte (30) del finalizador de documentos. Al mismo tiempo, inserte el resalto (32) del finalizador de documentos en el orificio (31) del PWB de perforación (F).

13. Usando el tornillo (H), apriete juntos el cable de conexión a tierra de la perforadora (33) y el PWB de perforación (F).

14. Enchufe los 6 cables de la perforadora a los conectores (34) del PWB de perforación (F).

Installation der Locher-PWB und des Lochungsabfallbehälters (DF-790/DF-791)

12. Die 2 Haken (29) in der Locher-PWB (F) in die Aussparung (30) am Dokument-Finisher einsetzen. Dabei auch den Vorsprung (32) am Dokument-Finisher in die Öffnung (31) auf der Locher-PWB (F) einsetzen.

13. Mit der Schraube (H) das Massekabel (33) der Lochereinheit an der Locher-PWB (F) festziehen.

14. Die 6 Kabel der Lochereinheit an die Steckverbinder (34) der Locher-PWB (F) anschließen.

Installazione della scheda a circuiti stampati di perforazione e dello scarto perforazione (DF-790/DF-791)

12. Inserire i 2 ganci (29) della scheda a circuiti stampati di perforazione (F) nell'intaglio (30) della finitrice di documenti. Contemporaneamente, inserire la sporgenza (32) sulla finitrice di documenti nel foro (31) della scheda a circuiti stampati di perforazione (F).

13. Utilizzando la vite (H), stringere insieme il cavo di terra (33) dell'unità di perforazione e la scheda a circuiti stampati di perforazione (F).

14. Collegare i 6 cavi dell'unità di perforazione nei connettori (34) sulla scheda a circuiti stampati di perforazione (F).

安装电路板与打孔纸屑盒（DF-790/DF-791 时）

12. 将打孔电路板（F）的 2 个卡扣（29）挂在装订器的缺口（30）上。同时，将打孔电路板（F）的孔（31）卡入装订器的突出部（32）。

13. 使用 1 颗螺丝（H）将打孔单元的接地线（33）与打孔电路板（F）一起固定。

14. 将打孔单元的 6 根电线与打孔电路板（F）的接插件（34）相连接。

기판과 펀치폐기박스의 부착 (DF-790/DF-791 의 경우)

12. 펀치기판 (F) 의 후크 (29) 2 곳을 문서 피니셔의 구멍 (30) 에 겁니다 . 동시에 펀치기판 (F) 구멍 (31) 을 문서 피니셔의 돌기 (32) 에 넣습니다 .

13. 나사 (H) 1 개로 펀치유니트의 접지선 (33) 과 펀치기판 (F) 을 함게 조입니다 .

14. 펀치유니트의 전선 6 선을 펀치기판 (F) 커넥터 (34) 에 접속합니다 .

基板とパンチくずボックスの取り付け(DF-790/DF-791 の場合)

12. パンチ基板（F）のフック（29)2 箇所をドキュメントフィニッシャーの切り欠き（30）に引っ掛ける。同時に、パンチ基板（F）の穴（31）をドキュメントフィニッシャーの突起（32）に入れる。

13. ビス（H)1 本で、パンチユニットのアース線（33）とパンチ基板（F）を共締めする。

14. パンチユニットの電線 6 本を、パンチ基板（F）のコネクター(34) に接続する。

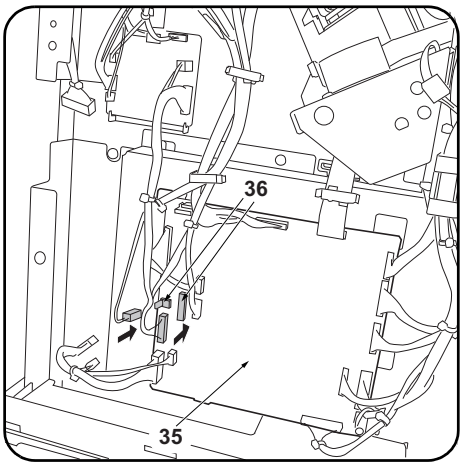

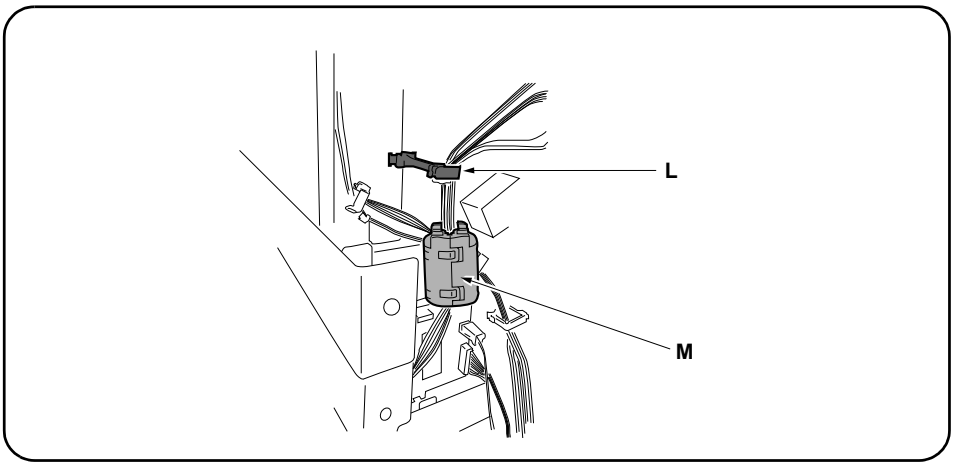

15. Plug the 2 punch PWB wires into the connectors (36) on the DF main PWB (35).

16. Install the small clamp (L) on the finisher, then pass and fasten the wires from the motor unit and hole punch unit.
17. Attach the ferrite core (M) to the wire.

---

15. Raccorder les 2 câbles de la PWB de la perforatrice aux connecteurs (36) de la PWB principale du DF (35).

16. Installer le grand collier (L) sur le retoucheur puis faire passer les câbles du moteur et de la perforatrice dans ce collier pour les fixer en place.
17. Fixer le noyau en ferrite (M) au câble.

---

15. Enchufe los 2 cables del PWB de perforación a los conectores (36) del PWB principal del DF (35).

16. Instale el sujetador grande (L) en el finalizador, después tienda y ajuste los cables de la unidad motriz y la perforadora.
17. Fije el núcleo de ferrita (M) al cable.

---

15. Die 2 Kabel der Locher-PWB an die Steckverbinder (36) der DF-Haupt-PWB (35) anschließen.

16. Die große Klemme (L) am Finisher anbringen, dann die Kabel von der Motoreinheit und der Lochereinheit hindurchführen und befestigen.
17. Den Ferritkern (M) am Kabel befestigen.

---

15. Collegare i 2 cavi della scheda a circuiti stampati di perforazione nei connettori (36) sulla scheda principale PWB (35) della DF.

16. Installare il morsetto grante (L) sul finitore, e quindi passare e fissare i cavi dall'unità motore e dall'unità di perforazione.
17. Applicare il nucleo in ferrite (M) al cavo.

---

15. 将打孔电路板的 2 根电线与 DF 主电路板 (35) 的接插件 (36) 连接。

16. 把大固定夹 (L) 安装在装订器上，从电机单元和打孔单元出来的导线穿过固定夹来固定。
17. 用磁环 (M) 套住导线。

---

15. 펀치기판의 전선 2 선을 DF 주 회로기판 (35) 의 커넥터 (36) 에 접속합니다 .

16. 클램프 대 (L) 를 피니셔에 장착 , 모터 유니트와 펀치 유니트에서부터 전선을 통과시키고 고정합니다 .
17. 페라이트 코어 (M) 를 전선으로 장착합니다 .

---

15. パンチ基板の電線 2 本を DF 主回路基板 (35) のコネクター(36) に接続する。

16. クランプ大(L)をフィニッシャーに取り付け、モーターユニットとパンチユニットからの電線を通し、固定する。
17. フェライトコア(M)を電線に取り付ける。

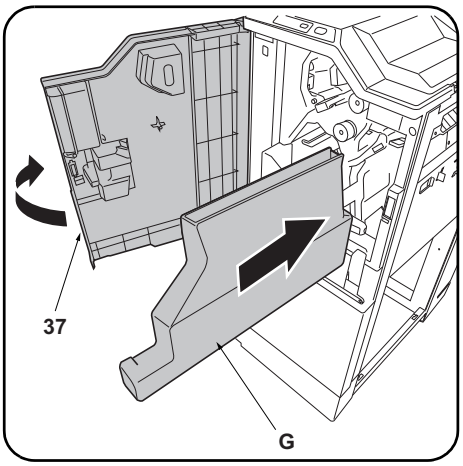

18. Replace the upper rear cover (8) and small rear cover (6).

19. Open the upper front cover (37) and insert the waste hole punch box (G).

---

18. Reposer le couvercle supérieur arrière (8) et le petit couvercle arrière (6).

19. Ouvrir le couvercle supérieur avant (37) et insérer le bac de récupération de la perforatrice (G).

---

18. Vuelva a colocar la cubierta trasera superior (8) y la cubierta trasera pequeña (6).

19. Abra la cubierta delantera superior (37) e inserte la caja para desechos de la perforación (G).

---

18. Die obere hintere Abdeckung (8) und die kleine hintere Abdeckung (6) wieder einsetzen.

19. Die obere vordere Abdeckung (37) öffnen und den Lochungsabfallbehälter (G) einsetzen.

---

18. Ricollocare il pannello superiore posteriore (8) e il pannello posteriore piccolo (6).

19. Aprire il pannello superiore anteriore (37) ed inserire lo scarto perforazione (G).

---

18. 按原样安装后上部盖板 (8) 与后部小盖板 (6)。

19. 打开前上部盖板 (37)，插入打孔纸屑盒 (G)。

---

18. 뒷 상커버 (8) 와 후 소커버 (6) 를 원래대로 부착합니다 .

19. 앞 상커버 (37) 를 열고 펀치폐기박스 (G) 를 삽입합니다 .

---

18. 後上カバー(8) と後小カバー(6) を元通り取り付ける。

19. 前上カバー(37) を開き、パンチくずボックス (G) を挿入する。

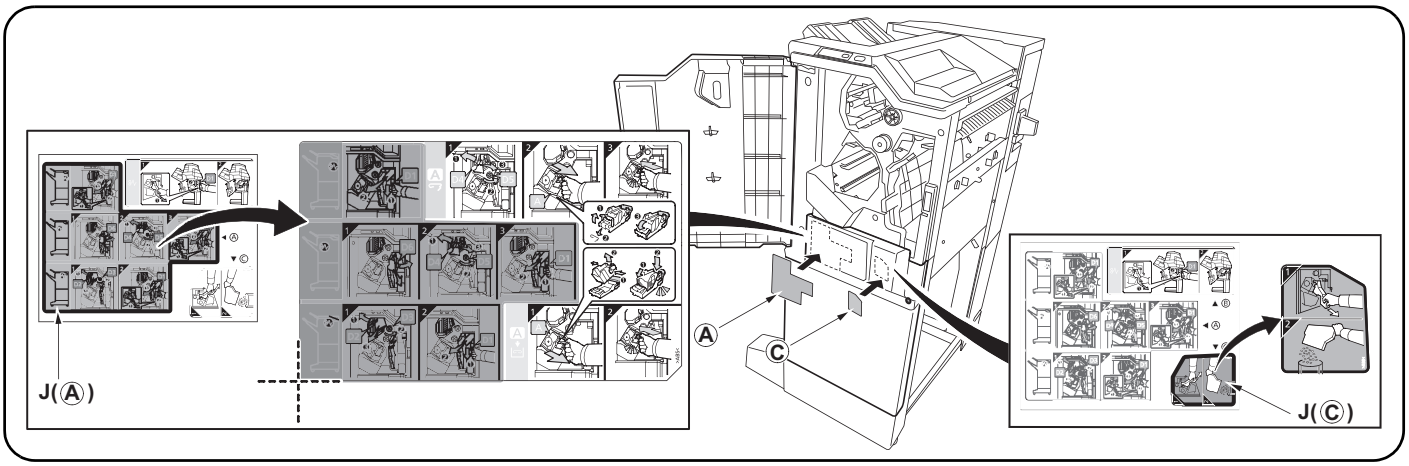

20. After cleaning each area with alcohol, adhere the following labels from the label sheet (J) at the locations shown in the illustration: A, C.
21. Close the upper front cover (37).

---

20. Après avoir nettoyé chaque zone à l'alcool, apposer les étiquettes suivantes du feuillet d'étiquettes (J) aux emplacements indiqués dans l'illustration : A, C.
21. Fermer le couvercle supérieur avant (37).

---

20. Después de limpiar todas las zonas con alcohol, despegue de la hoja de etiquetas (J) las etiquetas siguientes, y péguelas en los sitios que se indican en la ilustración: A, C.
21. Cierre la cubierta delantera superior (37).

---

20. Nachdem Sie alle Flächen mit Alkohol gereinigt haben, kleben Sie bitte die folgenden Aufkleber vom Aufkleberbogen (J) an die in der Abbildung angegebenen Stellen: A, C.
21. Die obere vordere Abdeckung (37) schließen.

---

20. Dopo aver pulito ciascuna zona con alcol, applicare le seguenti etichette del foglio di etichette (J) sui punti mostrati nell'illustrazione: A, C.
21. Chiudere il pannello superiore anteriore (37).

---

20. 用酒精清洁各区域后，请在如图所示位置粘贴从标签纸上（J）撕下的下列标签：A、C。
21. 关闭前上部盖板（37）。

---

20. 라벨 시트 (J) 내의 하기 라벨을 일러스트의 위치에 알코올청소 후 붙입니다:A, C .
21. 앞 상커버 (37) 를 닫습니다 .

---

20. ラベルシート（J）内の A、C をイラストの位置にアルコール清掃後貼り付ける。
21. 前上カバー(37) を閉じる。

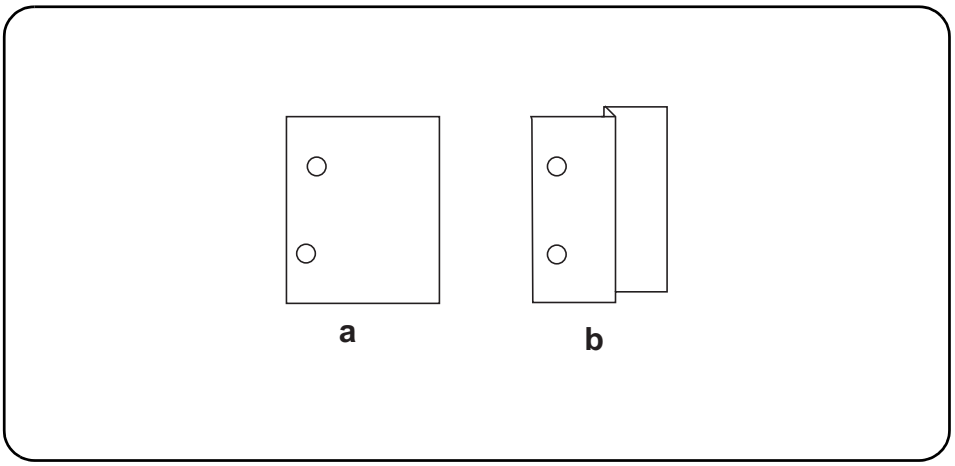

[Adjusting the hole punch position]

1. Connect the MFP power plug to the wall outlet and turn the MFP main power switch on.
2. Make a test copy in punch mode.
3. If any off-centering is observed, follow the procedure below to adjust the hole position.

Adjusting the hole punch entry registration

1. Enter the maintenance mode U246, select Finisher and Punch Regist.
2. Adjust the values.
   When the paper fed in skewed copy example (a): Increase the setting value.
   When the paper crimped copy example (b): Decrease the setting value.
3. Press the Start key to confirm the setting value.

[Réglage de la position des perforations]

1. Insérer la fiche d'alimentation du MFP dans la prise murale et mettre l'interrupteur principal du MFP sous tension.
2. Effectuer une copie d'essai en mode perforation.
3. Si les perforations sont décentrées, suivre la procédure ci-dessous pour ajuster la position de perforation.

Réglage de l'enregistrement de l'entrée des perforations

1. Passer en mode maintenance U246, sélectionner Finisher et Punch Regist.
2. Régler les valeurs.
   Si le papier est alimenté de travers exemple de copie (a): Augmentez la valeur de réglage.
   Si le papier est froissé exemple de copie (b): Diminuez la valeur de réglage.
3. Appuyer sur la touche de Start pour confirmer la valeur de réglage.

[Ajuste de la posición de perforación]

1. Conecte el enchufe del MFP en el receptáculo de pared y encienda el interruptor principal del MFP.
2. Haga una copia de prueba en el modo de perforación.
3. Si observa descentrado, siga el procedimiento de abajo para ajustar la posición del agujero.

Ajuste del registro de entrada de perforación

1. Entre en el modo de mantenimiento U246, seleccione Finisher y Punch Regist.
2. Ajuste los valores.
   Cuando el papel alimentado está torcido copia de muestra (a): Aumente el valor de configuración.
   Cuando el papel se dobló copia de muestra (b): Reduzca el valor de configuración.
3. Pulse la tecla de Start para confirmar el valor de configuración.

[Einstellen der Lochungsposition]

1. Stecken Sie den Netzstecker des MFP in die Wandsteckdose und schalten Sie den MFP am Hauptschalter ein.
2. Eine Testkopie im Lochungsmodus erstellen.
3. Falls eine außermittige Lochung erfolgte, ist die Lochungsposition wie folgend nachzustellen.

Einstellen der Lochungsregistrierung

1. Schalten Sie in den Wartungsmodus U246, wählen Sie Finisher und Punch Regist.
2. Die Werte einstellen.
   Wenn Papier verkantet eingezogen wird Kopiebeispiel (a): Den Einstellwert erhöhen.
   Wenn Papier verknittert wird Kopiebeispiel (b): Den Einstellwert verringern.
3. Den Einstellwert durch Drücken der Start-Taste bestätigen.

[Regolazione di posizione dei fori di perforazione]

1. Collegare la spina del cavo di alimentazione dell'MFP alla presa a muro della rete elettrica e accendere l'interruttore principale di alimentazione.
2. Eseguire una copia di prova in modalità di perforazione.
3. Nel caso in cui non lo siano, eseguire la procedura indicata qui di seguito per regolarne la posizione.

Regolazione del registro del foro di perforazione

1. Entrare in modalità manutenzione U246, selezionare Finisher e Punch Regist.
2. Regolare i valori.
   Quando l'alimentazione della carta risulta obliqua esempio di copia (a): Aumentare il valore dell'impostazione.
   Quando la carta risulta increspata esempio di copia (b): Diminuire il valore dell'impostazione.
3. Premere il tasto di Start per confermare il valore dell'impostazione.

[打孔位置的调节]

1. 将 MFP 主机上的电源插头插入电源插座中，打开主电源开关。
2. 在打孔模式下进行测试复印。
3. 打孔位置有偏差时，按以下步骤进行调节。

打孔装入定位调节

1. 设置维护模式 U246，选择 Finisher、Punch Regist。
2. 调整设定值。
   纸张斜向搬运时的复印样本 (a)：调高设定值。
   纸张作 Z 字折时的复印样本 (b)：调低设定值。
3. 按 Start 键，以确定设定值。

[펀치위치의 조정]

1. MFP 본체 전원플러그를 콘센트에 꽂고 주 전원 스위치를 ON 으로 합니다 .
2. 펀치모드에서 시험복사를 합니다 .
3. 펀치위치가 벗어난 경우에는 다음 순서로 조정합니다 .

펀치반입 레지스트 조정

1. 메인터넌스 모드 U246 를 세트하고 Finisher, Punch Regist 를 선택합니다 .
2. 설정치를 조정합니다 .
   용지가 경사로 반송되는 경우의 복사샘플 (a):설정치를 높입니다 .
   용지가 Z 꺾임이 있는 경의 복사샘플 (b):설정치를 내립니다 .
3. 시작키를 누르고 설정치를 확인합니다 .

[パンチ位置の調整]

1. MFP 本体の電源プラグをコンセントに差し込み、主電源スイッチを ON にする。
2. パンチモードでテストコピーを行う。
3. パンチ位置がずれていた場合、次の手順で調整を行う。

パンチ搬入レジスト調整

1. メンテナンスモード U246 をセットし、Finisher、Punch Regist を選択する。
2. 設定値を調整する。
   用紙が斜めに搬送される場合コピーサンプル (a):設定値を上げる。
   用紙が Z 折れする場合コピーサンプル (b):設定値を下げる。
3. スタートキーを押し、設定値を確定する。

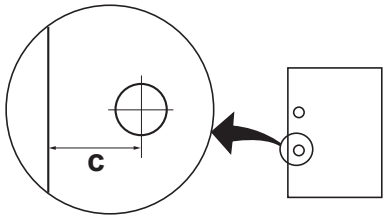

Adjusting the hole punch position feed

1. Enter the maintenance mode U246, select Finisher and Punch Feed.
2. Adjust the values.
   If the punch hole position is closer to the edge than the reference value (c): Increase the setting value.
   If the punch hole position is further from the edge than the reference value (c): Decrease the setting value.
3. Press the Start key to confirm the setting value.
   <Reference value (c)>
   Metric specification: 13 mm; Inch specification: 9.5 mm

Réglage de la position du point de perforation

1. Passer en mode maintenance U246, sélectionner Finisher et Punch Feed.
2. Régler les valeurs.
   Si la perforation est plus proche du bord de la feuille que défini par la valeur de référence (c): Augmentez la valeur de réglage.
   Si la perforation est plus loin du bord de la feuille que défini par la valeur de référence (c): Diminuez la valeur de réglage.
3. Appuyer sur la touche de Start pour confirmer la valeur de réglage.
   <Valeur de référence (c)>
   Spécifications métriques: 13 mm; Spécifications en pouces: 9,5 mm

Ajuste de la alimentación de la posición de perforación

1. Entre en el modo de mantenimiento U246, seleccione Finisher y Punch Feed.
2. Ajuste los valores.
   Si la posición de perforación está más cerca del borde que el valor de referencia (c): Aumente el valor de configuración.
   Si la posición de perforación está más alejada del borde que el valor de referencia (c): Reduzca el valor de configuración.
3. Pulse la tecla de Start para confirmar el valor de configuración.
   <Valor de referencia (c)>
   Sistema métrico: 13 mm; en pulgadas: 9,5 mm

Einstellen des Transports der Lochungsposition

1. Schalten Sie in den Wartungsmodus U246, wählen Sie Finisher und Punch Feed.
2. Die Werte einstellen.
   Falls die Lochungsposition näher an der Kante liegt als der Bezugswert (c) erlaubt: Den Einstellwert erhöhen.
   Falls die Lochungsposition ferner von der Kante liegt als der Bezugswert (c) erlaubt: Den Einstellwert verringern.
3. Den Einstellwert durch Drücken der Start-Taste bestätigen.
   <Bezugswert (c)>
   Metrischer Abstand: 13 mm; Abstand in Zoll: 9,5 mm

Regolazione spostamento di posizione dei fori di perforazione

1. Entrare in modalità manutenzione U246, selezionare Finisher e Punch Feed.
2. Regolare i valori.
   Se la posizione dei fori di perforazione è più vicina al bordo rispetto al valore di riferimento (c): Aumentare il valore dell'impostazione.
   Se la posizione dei fori di perforazione è più lontana dal bordo rispetto al valore di riferimento (c): Diminuire il valore dell'impostazione.
3. Premere il tasto di Start per confermare il valore dell'impostazione.
   <Valore di riferimento (c)>
   Specificazione in unità metrica: 13 mm; Specificazione in pollici: 9,5 mm

打孔位置搬运调节

1. 设置维护模式 U246，选择 Finisher、Punch Feed。
2. 调整设定值。
   打孔位置比基准值（c）短时：调高设定值。
   打孔位置比基准值（c）长时：调低设定值。
3. 按 Start 键，以确定设定值。
   ＜基准值（c）＞
   公制规格：13㎜、英制规格：9.5㎜

펀치위치 반송조정

1. 메인터넌스 모드 U246 를 세트하고 Finisher, Punch Feed 를 선택합니다 .
2. 설정치를 조정합니다 .
   펀치구멍의 위치가 기준치 (c) 보다 짧은 경우:설정치를 높입니다 .
   펀치구멍의 위치가 기준치 (c) 보다 긴 경우:설정치를 내립니다 .
3. 시작키를 누르고 설정치를 확인합니다 .
   ＜기준치 (c) ＞
   센치사양:13mm, 인치사양:9.5mm

パンチ位置搬送調整

1. メンテナンスモード U246 をセットし、Finisher、Punch Feed を選択する。
2. 設定値を調整する。
   パンチ穴の位置が基準値（c）より短い場合:設定値を上げる。
   パンチ穴の位置が基準値（c）より長い場合:設定値を下げる。
3. スタートキーを押し、設定値を確定する。
   ＜基準値（c）＞
   センチ仕様:13㎜、インチ仕様:9.5㎜

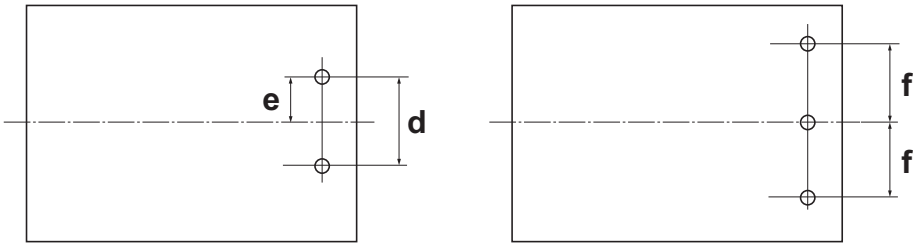

Centering the hole punch position

1. Enter the maintenance mode U246, select Finisher and Punch Width.
2. Adjust the values.
   If the punch hole is too close to the front of the machine: Decrease the setting value.
   If the punch hole is too close to the rear of the machine: Increase the setting value.
3. Press the Start key to confirm the setting value.
   <Reference value>
   Metric specification: d = 80 mm ± 0.5, e = 40 mm ± 2
   Inch specification: d = 2.75 inch ± 0.5, e = 1.375 inch ± 2, f = 4.25 inch ± 0.5

Centrage de la position de perforation

1. Passer en mode maintenance U246, sélectionner Finisher et Punch Width.
2. Régler les valeurs.
   Si la perforation est trop proche de l'avant de la machine: Diminuez la valeur de réglage.
   Si la perforation est trop proche de l'arrière de la machine: Augmentez la valeur de réglage.
3. Appuyer sur la touche de Start pour confirmer la valeur de réglage.
   <Valeur de référence>
   Spécifications métriques: d = 80 mm ± 0,5, e = 40 mm ± 2
   Spécifications en pouces: d = 2,75 pouces ± 0,5, e = 1,375 pouces ± 2, f = 4.25 pouces ± 0,5

Centrado de la posición de perforación

1. Entre en el modo de mantenimiento U246, seleccione Finisher y Punch Width.
2. Ajuste los valores.
   Si la perforación se encuentra demasiado cerca del frente de la máquina: Reduzca el valor de configuración.
   Si la perforación se encuentra demasiado cerca de la parte trasera de la máquina: Aumente el valor de configuración.
3. Pulse la tecla de Start para confirmar el valor de configuración.
   <Valor de referencia>
   Sistema métrico: d = 80 mm ± 0,5, e = 40 mm ± 2
   En pulgadas: d = 2,75 pulgada ± 0,5, e = 1,375 pulgada ± 2, f = 4.25 ± 0,5 pulgada

Zentrieren der Stanzlochposition

1. Schalten Sie in den Wartungsmodus U246, wählen Sie Finisher und Punch Width.
2. Die Werte einstellen.
   Falls die Lochung zu nah an der Gerätefront liegt: Den Einstellwert verringern.
   Falls die Lochung zu weit weg von der Gerätefront liegt: Den Einstellwert erhöhen.
3. Den Einstellwert durch Drücken der Start-Taste bestätigen.
   <Bezugswert>
   Metrischer Abstand: d = 80 mm ± 0,5; e = 40 mm ± 2
   Abstand in Zoll: d = 2,75 Zoll ± 0,5, e = 1,375 Zoll ± 2, f = 4.25 Zoll ± 0,5

Centratura della posizione dei fori di perforazione

1. Entrare in modalità manutenzione U246, selezionare Finisher e Punch Width.
2. Regolare i valori.
   Se la posizione dei fori di perforazione è troppo vicina alla parte anteriore della macchina: Diminuire il valore dell'impostazione.
   Se la posizione dei fori di perforazione è troppo vicina alla parte posteriore della macchina: Aumentare il valore dell'impostazione.
3. Premere il tasto di Start per confermare il valore dell'impostazione.
   <Valore di riferimento>
   Specificazione in unità metrica: d = 80 mm ± 0,5, e = 40 mm ± 2
   Specificazione in pollici: d = 2,75 pollici ± 0.5, e = 1,375 pollici ± 2, f = 4.25 pollici ± 0.5

打孔位置中心调节

1. 设置维护模式 U246，选择 Finisher、Punch Width。
2. 调整设定值。
   打孔位置向机器前部偏移时: 调低设定值。
   打孔位置向机器后部偏移时: 调高设定值。
3. 按 Start 键，以确定设定值。
   ＜基准值＞
   公制规格：d=80mm±0.5、e=40mm±2
   英制规格：d=2.75inch±0.5、e=1.375inch±2、f=4.25inch±0.5

펀치위치 센터조정

1. 메인터넌스 모드 U246 를 세트하고 Finisher, Punch Width 를 선택합니다 .
2. 설정치를 조정합니다 .
   펀치구멍이 기기 앞측으로 벗어난 경우:설정치를 내립니다 .
   펀치구멍의 위치가 기기 뒷측으로 벗어난 경우:설정치를 높입니다 .
3. 시작키를 누르고 설정치를 확인합니다 .
   ＜기준치＞
   센치 사양:d=80mm±0.5, e=40mm±2
   인치사양:d=2.75inch±0.5, e=1.375inch±2, f=4.25inch±0.5

パンチ位置センター調整

1. メンテナンスモード U246 をセットし、Finisher、Punch Width を選択する。
2. 設定値を調整する。
   パンチ穴の位置が機械前側にずれている場合:設定値を下げる。
   パンチ穴の位置が機械後側にずれている場合:設定値を上げる。
3. スタートキーを押し、設定値を確定する。
   ＜基準値＞
   センチ仕様:d=80mm±0.5、e=40mm±2
   インチ仕様:d=2.75inch±0.5、e=1.375inch±2、f=4.25inch±0.5

MEMO

MEMO

MEMO

303NK5671103

2014. 8
303NK56711-03

INSTALLATION GUIDE FOR INNER JOB SEPARATOR

INSTALLATION GUIDE

GUIDE D’INSTALLATION

GUÍA DE INSTALACION

INSTALLATIONSANLEITUNG

GUIDA ALL’INSTALLAZIONE

安装手册

설치안내서

設置手順書

JS-730

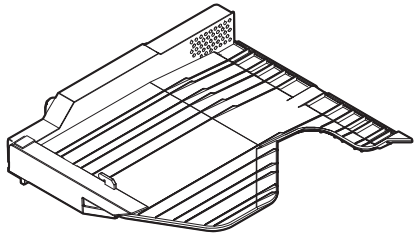

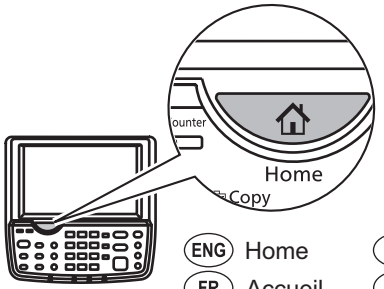

ENG Home
FR Accueil
ES Inicio
DE Startseite
IT Home
CN 主界面
KO 홈
JP ホーム

ENG see Page 1 to Page 6
FR voir Page 1 à Page 6
ES consulte las páginas de la 1 a la 6
DE siehe Seiten 1 bis 6
IT vedere le pagine da 1 a 6
CN 请参见P1-P6
KO 1페이지~6페이지를 참조하십시오
JP 1ページ～6ページ

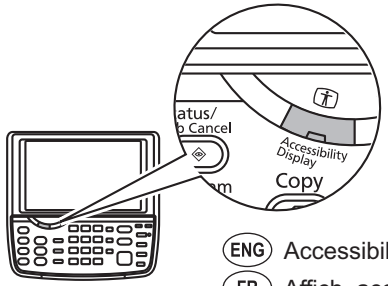

ENG Accessibility Display
FR Affich. accessibilité
ES Pantalla acceso
DE Zugriffsanzeige
IT Visual. Accessibilità
CN 扩大显示
KO 유니버셜
JP ユニバーサル

ENG see Page 7 to Page 13
FR voir Page 7 à Page 13
ES consulte las páginas de la 7 a la 13
DE siehe Seiten 7 bis 13
IT vedere le pagine da 7 a 13
CN 请参见P7-P13
KO 7페이지~13페이지를 참조하십시오
JP 7ページ～13ページ

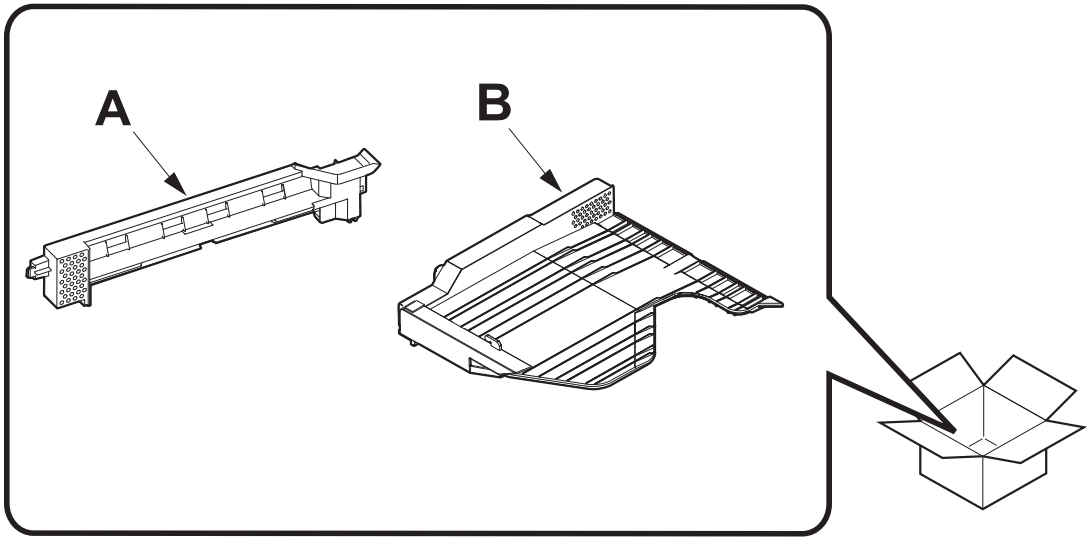

ENG Precautions

The illustrations of the machine in the Installation Guide are for color MFP.

FR Précautions

L'appareil représenté dans les illustrations du présent guide d'installation est le MFP couleur.

ES Precauciones

Las ilustraciones de la máquina que aparecen en la Guía de instalación corresponden a una MFP en color.

DE Vorsichtsmaßnahmen

Die Abbildungen der Maschine in der Installationsanleitung gelten für den Farb-MFP.

IT Precauzioni

Le illustrazioni della macchina nella guida di installazione sono per colore MFP.

CN 注意事项

安装手册中记载的机器主机的插图是彩色机。

KO 주의사항

설치순서에 기재되어 있는 기기본체 일러스트는 컬러기 입니다 .

JP 注意事項

設置手順書に記載している機械本体のイラストはカラー機です。

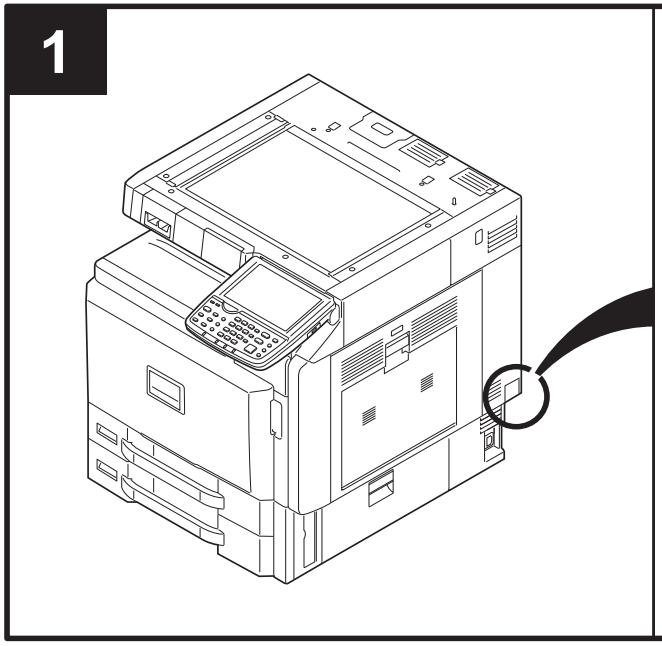

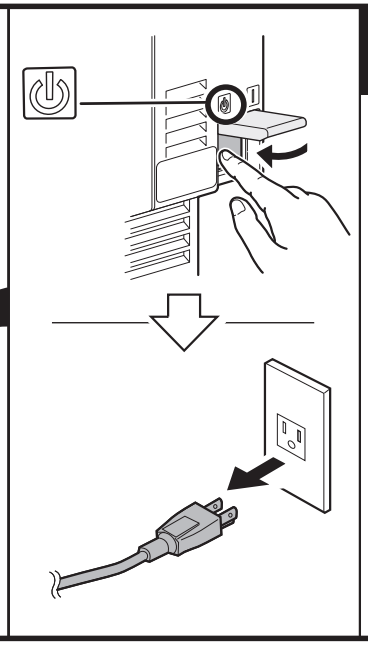

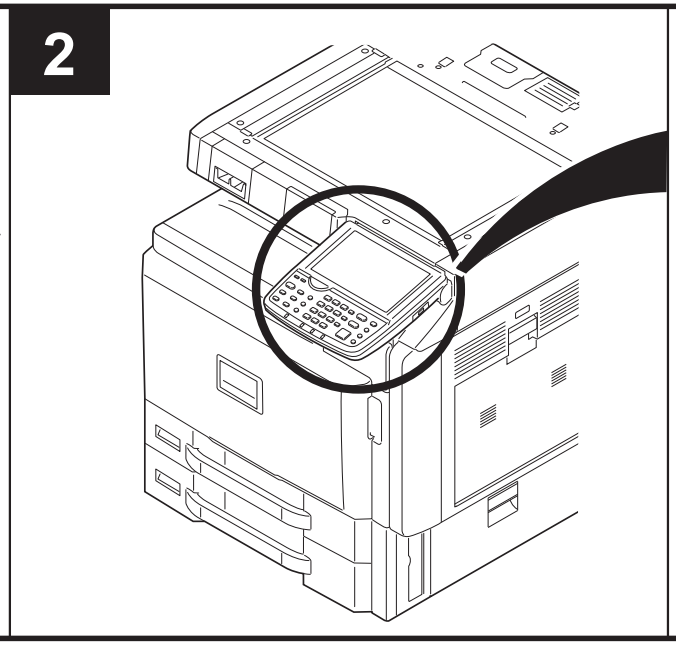

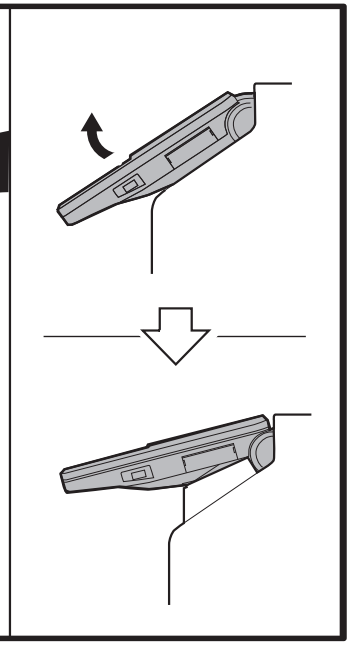

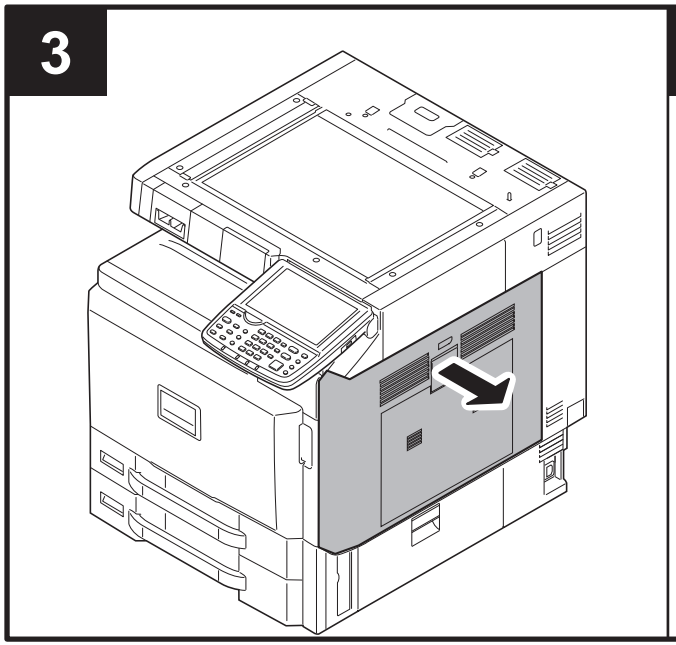
3

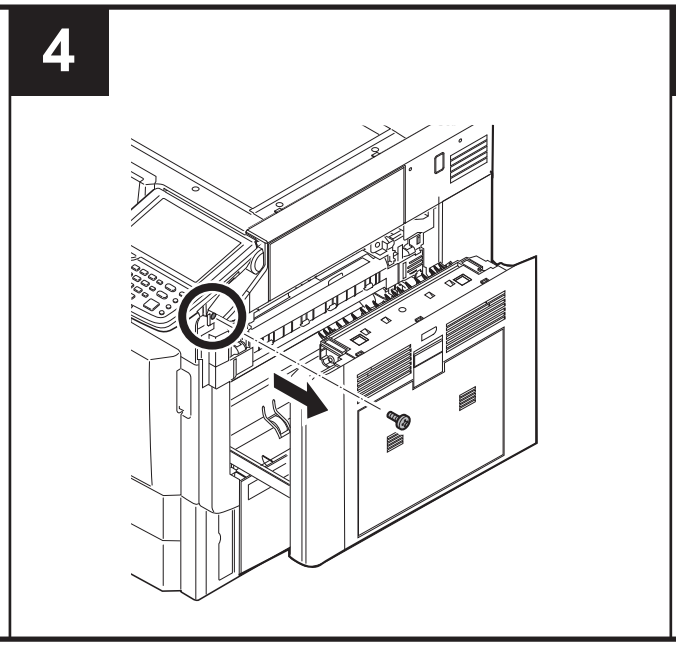
4

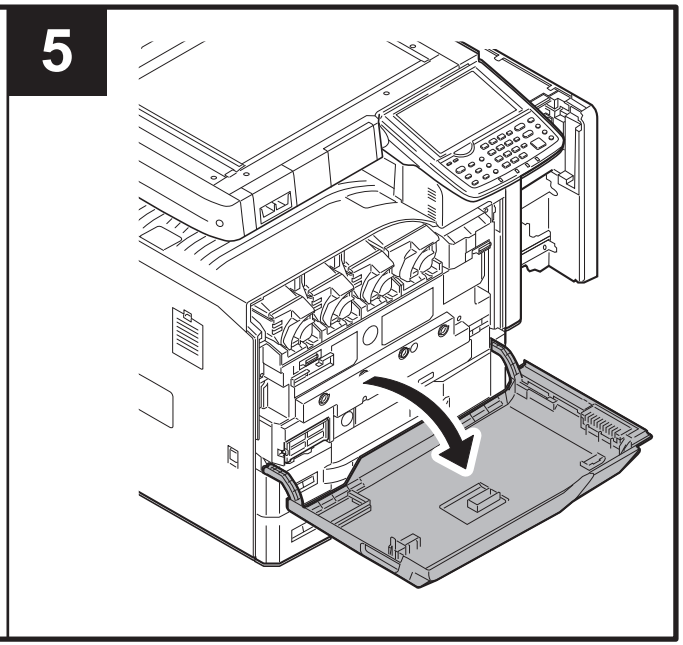
5

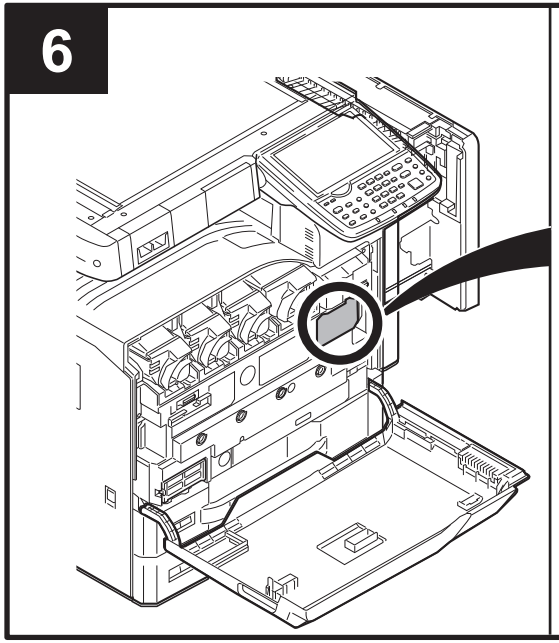
6

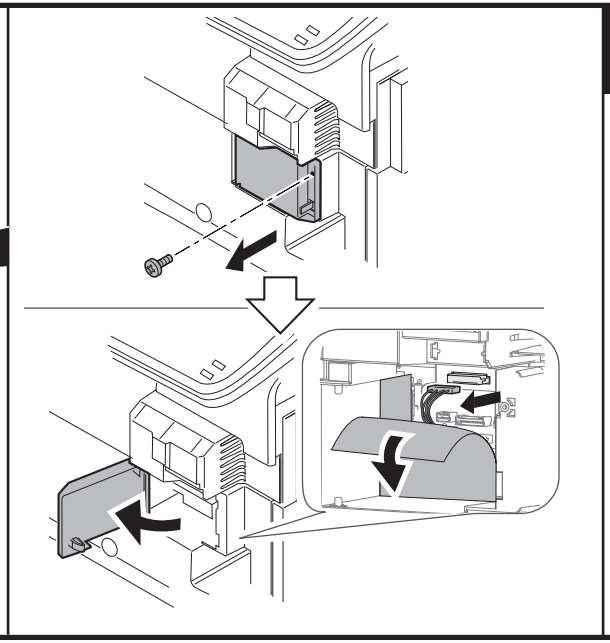

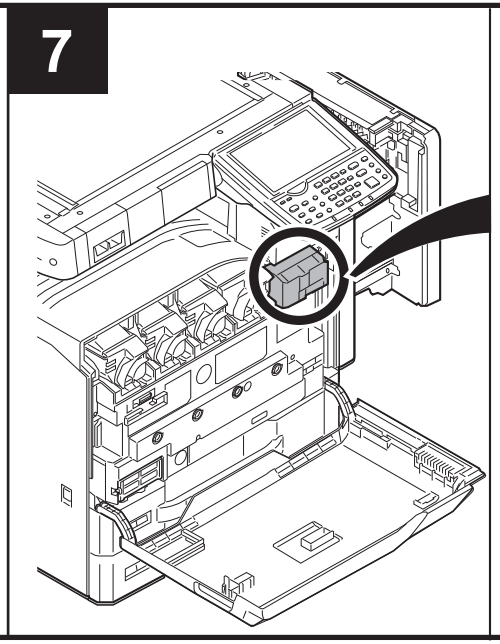
7

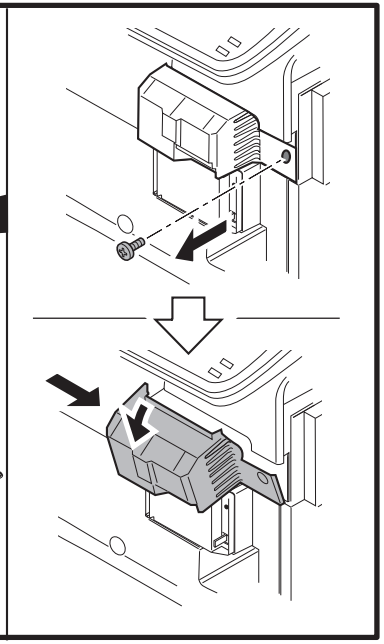

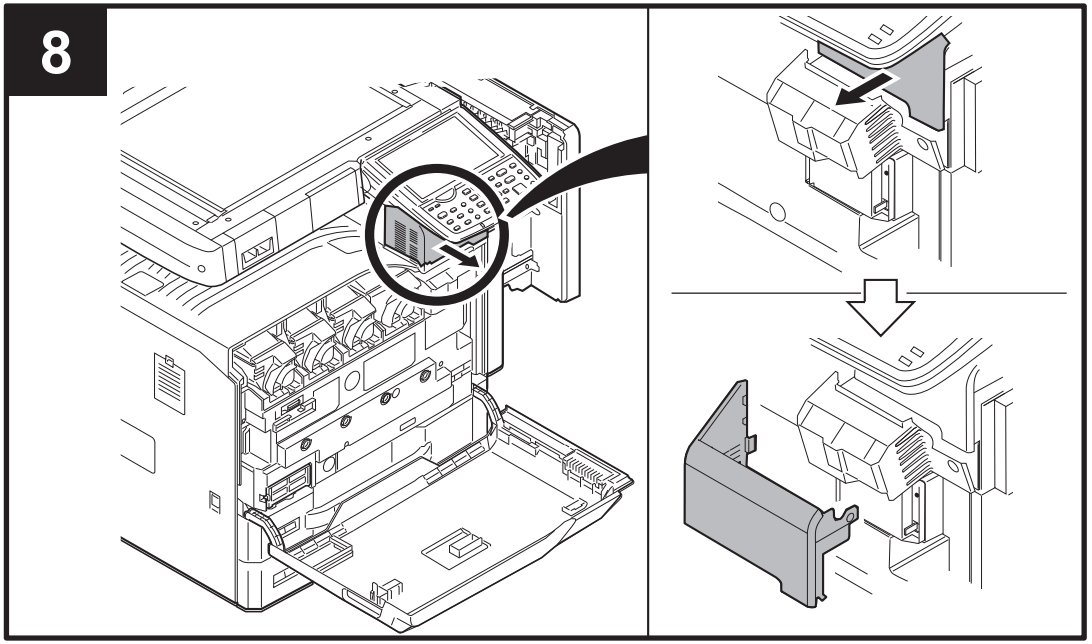
8

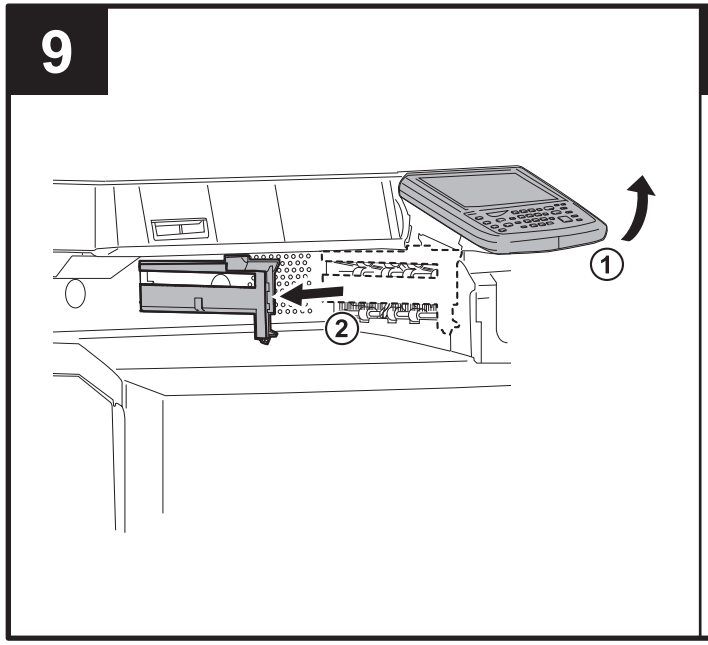
9
1
2

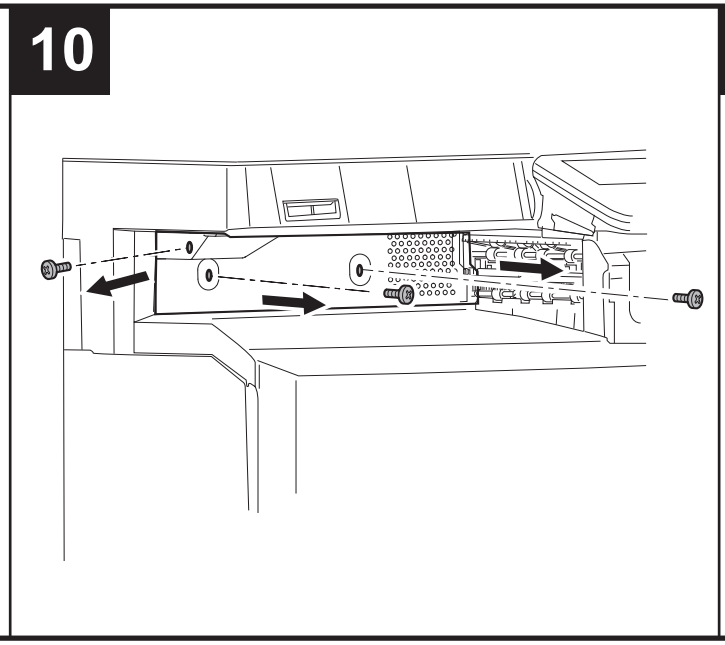
10

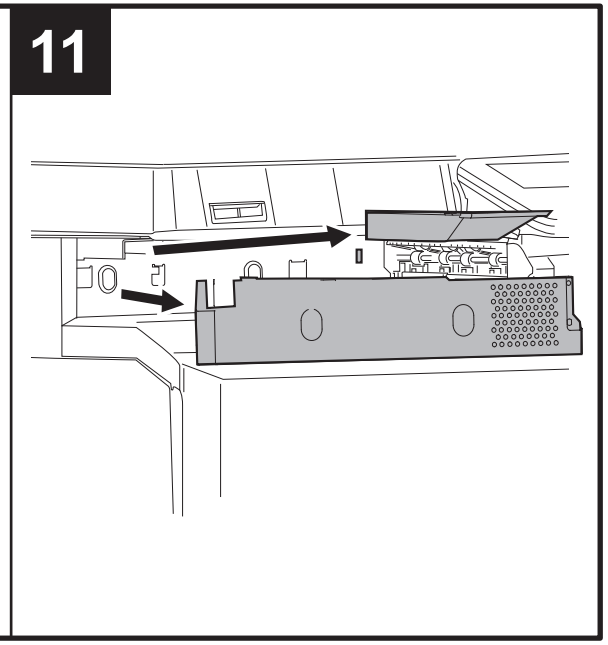
11

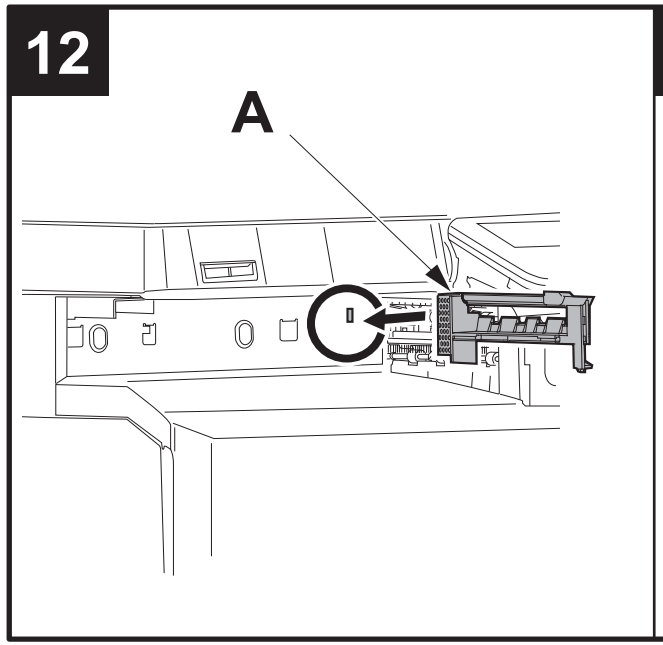
12
A

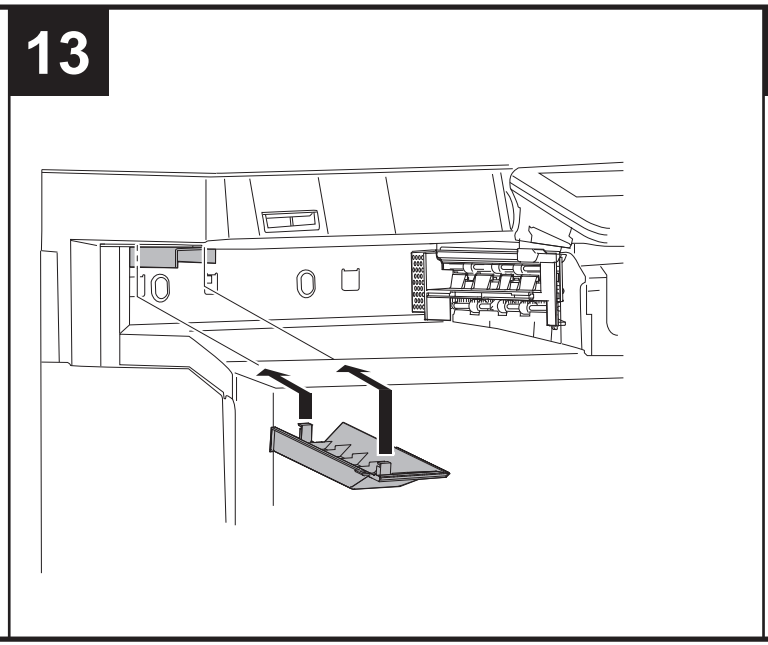
13

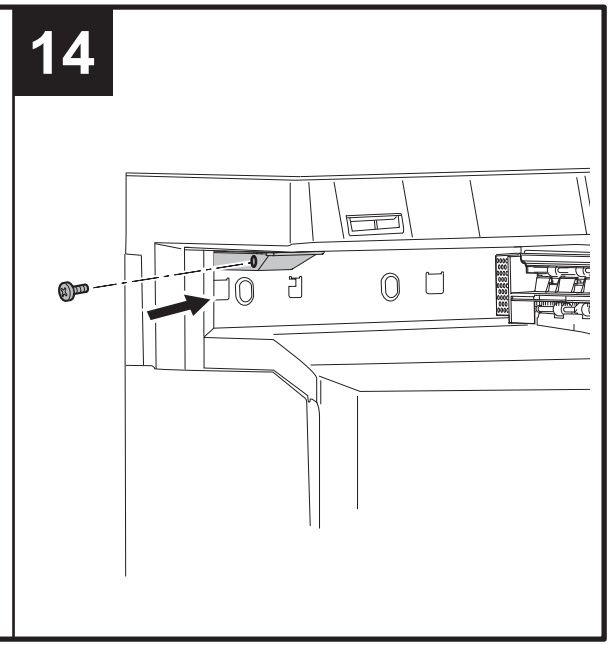
14

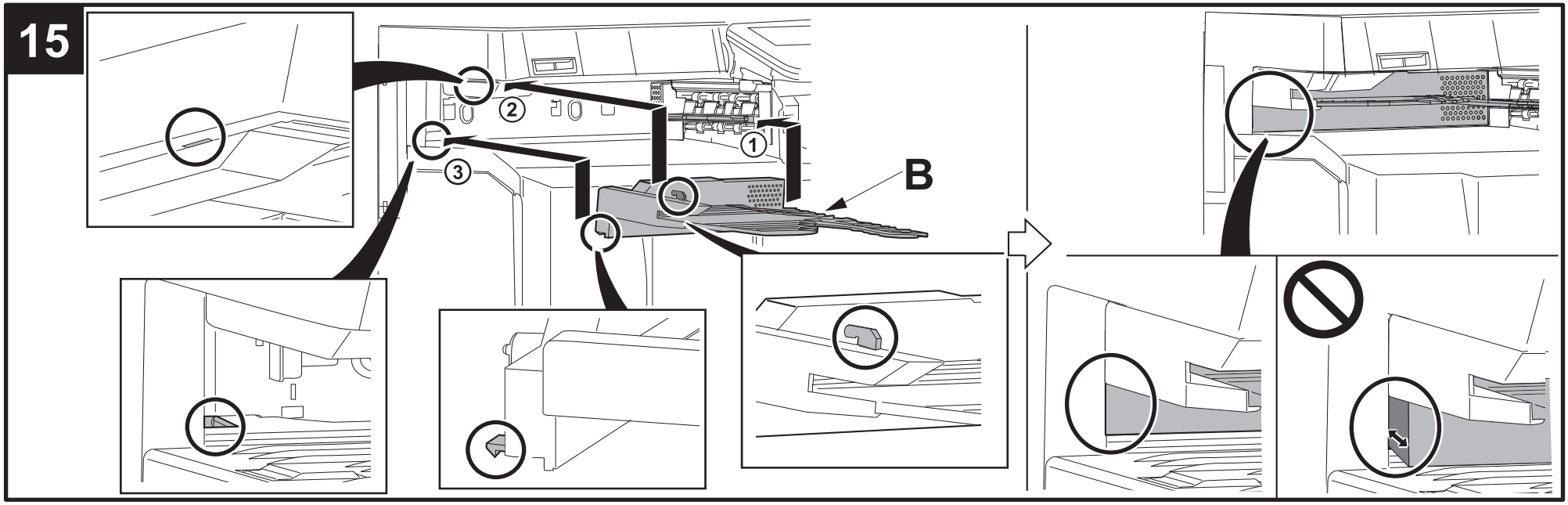
15
2
3
1
B

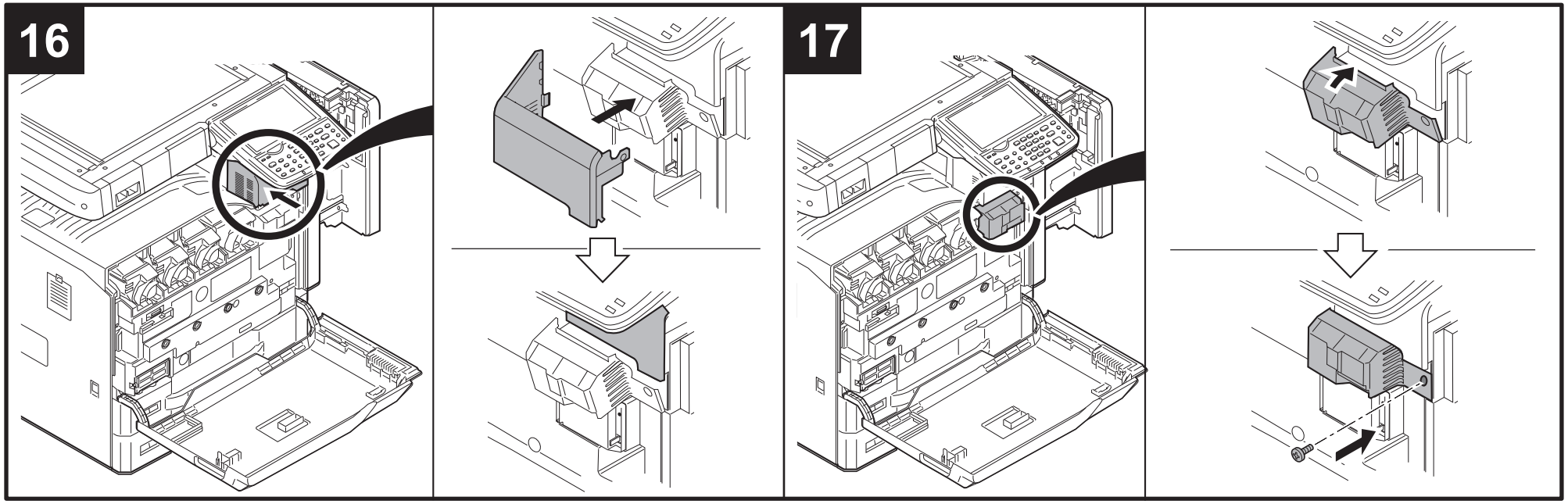
16
17

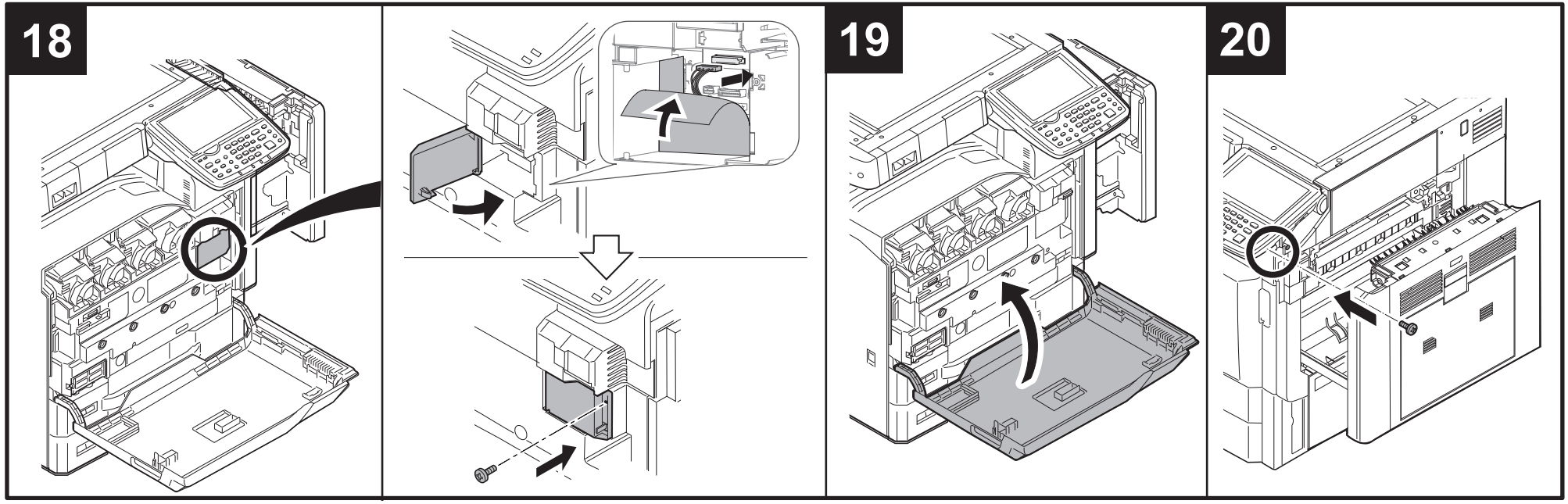
18
19
20

21

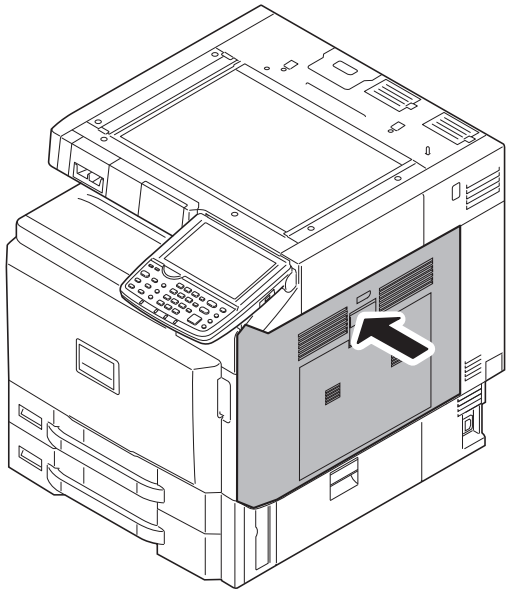

22

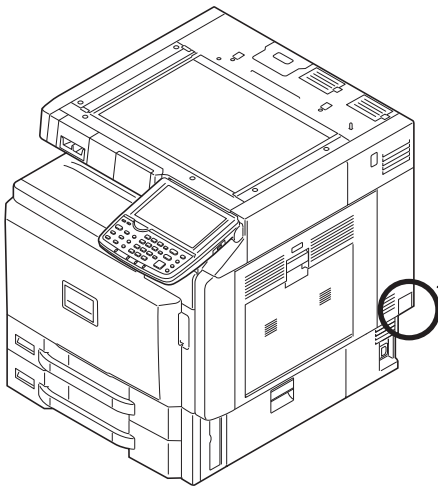

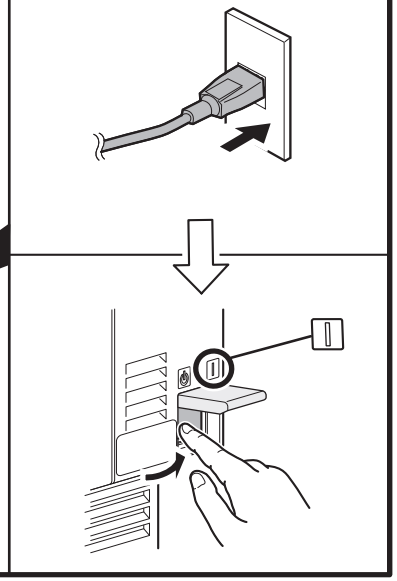

23

(ENG) Enter maintenance mode U211 "Set Enhance connection", and select Inner Job Separator.

(FR) Passer en mode maintenance U211, cliquer sur "Set Enhance connection" et sélectionner Inner Job Separator.

(ES) Entre en el modo de mantenimiento U211 "Set Enhance connection" y seleccione Inner Job Separator.

(DE) Schalten Sie in den Wartungsmodus U211 „Set Enhance connection“ und wählen Sie Inner Job Separator.

(IT) Introdurre la modalità manutenzione U211 "Set Enhance connection", e selezionare Inner Job Separator.

(CN) 进入维护模式，在U211 Set Enhance connection 中选择Inner Job Separator。

(KO) 메인터넌스 모드에 들어가 U211 Set Enhance connection에서 Inner Job Separator를 선택합니다.

(JP) メンテナンスモードに入り、U211エンハンス接続設定にてInner Job Separatorを選択する。

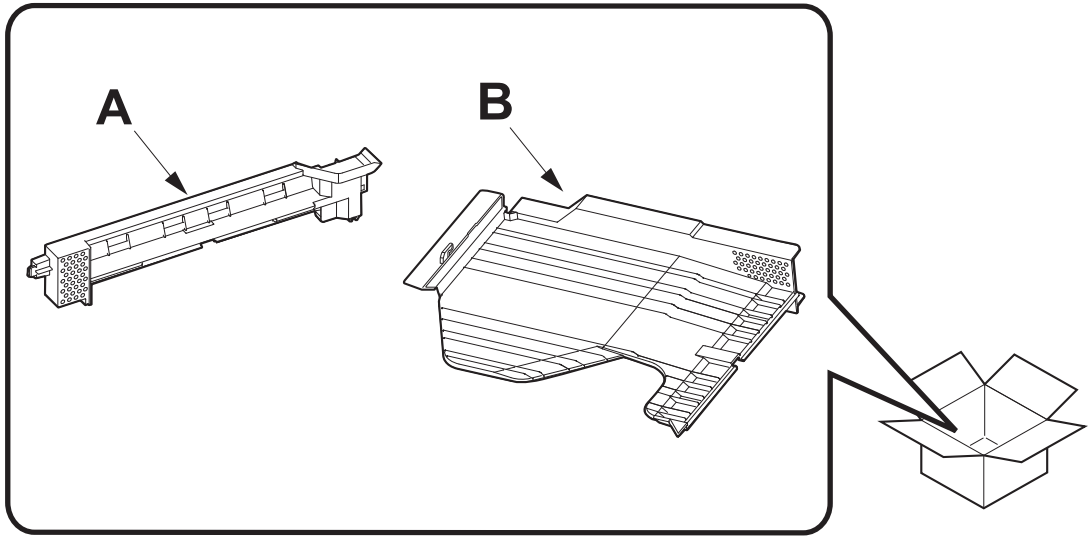

ENG Precautions

The illustrations of the machine in the Installation Guide are for color MFP.

FR Précautions

L'appareil représenté dans les illustrations du présent guide d'installation est le MFP couleur.

ES Precauciones

Las ilustraciones de la máquina que aparecen en la Guía de instalación corresponden a una MFP en color.

DE Vorsichtsmaßnahmen

Die Abbildungen der Maschine in der Installationsanleitung gelten für den Farb-MFP.

IT Precauzioni

Le illustrazioni della macchina nella guida di installazione sono per colore MFP.

CN 注意事项

安装手册中记载的机器主机的插图是彩色机。

KO 주의사항

설치순서에 기재되어 있는 기기본체 일러스트는 컬러기 입니다 .

JP 注意事項

設置手順書に記載している機械本体のイラストはカラー機です。

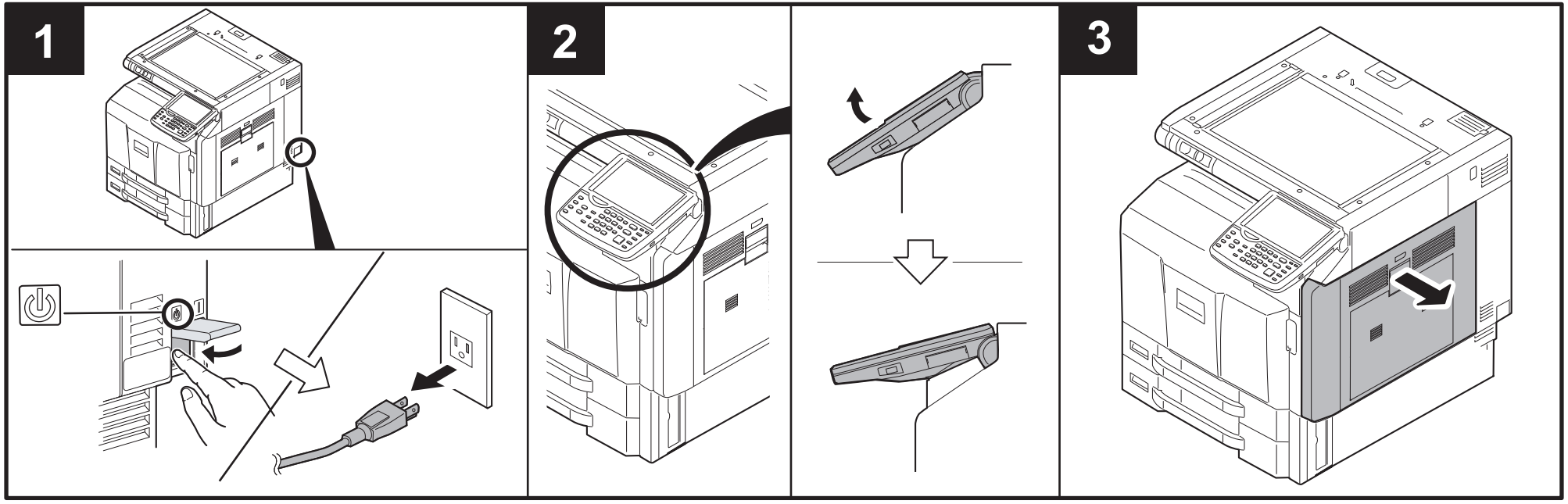

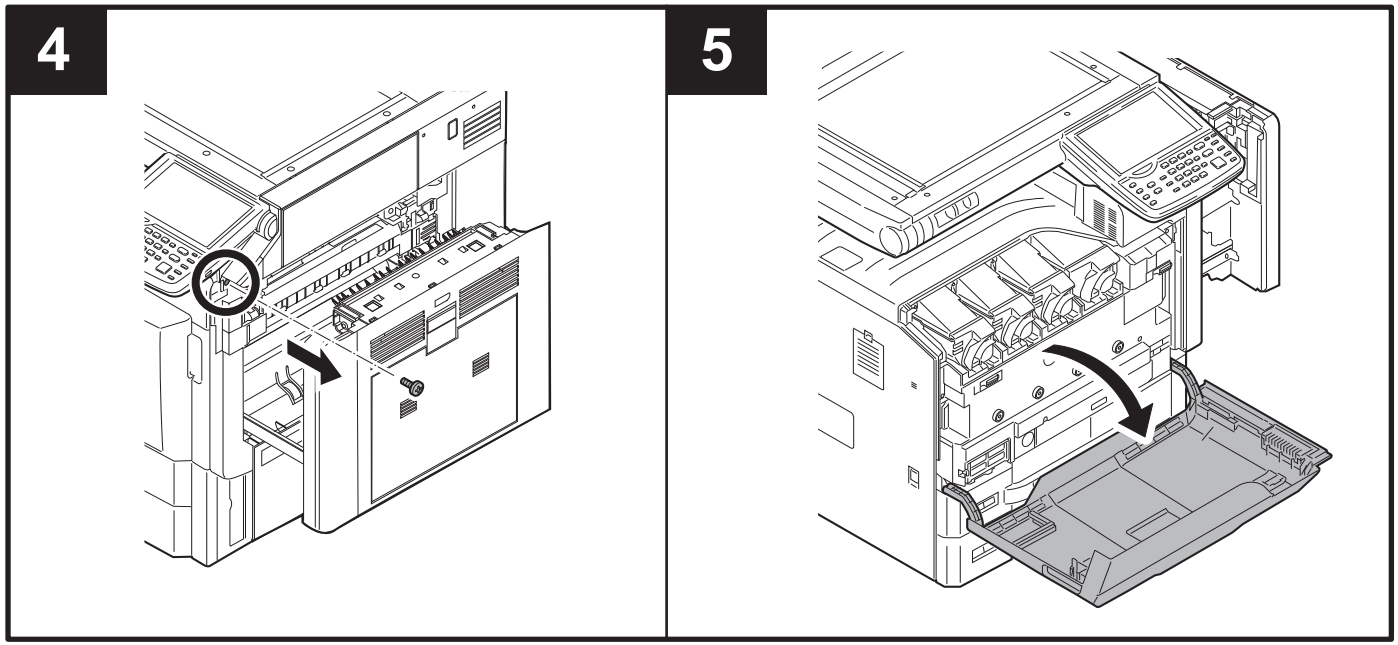
4
5

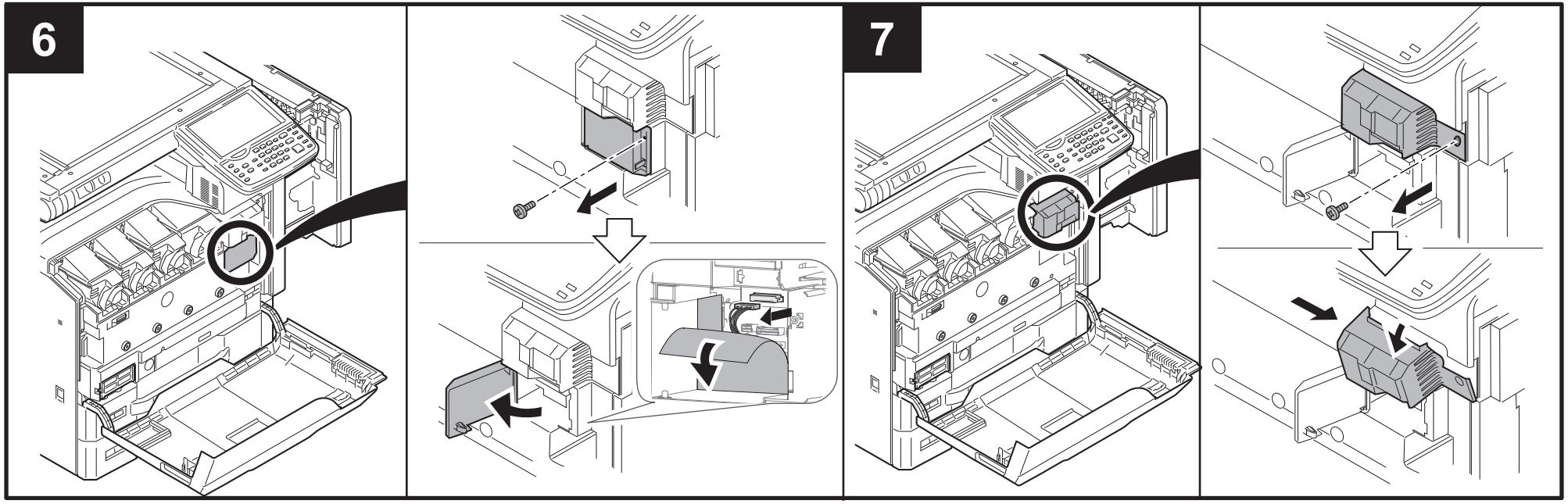
6
7

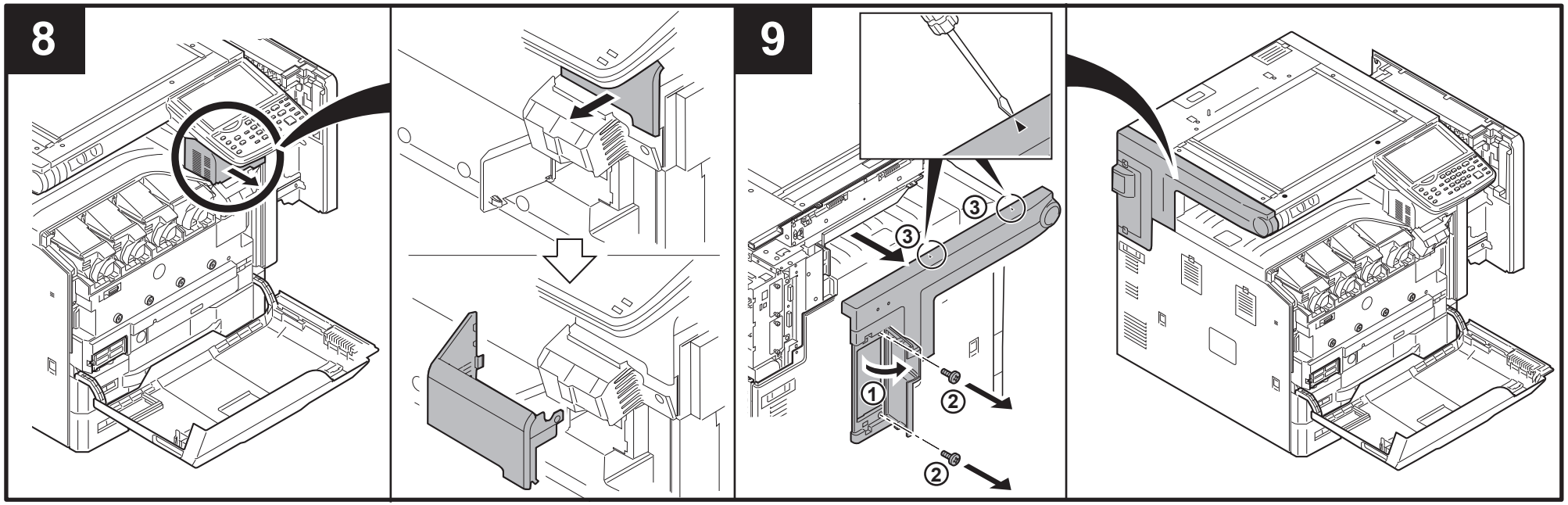
8
9
3
3
1
2
2

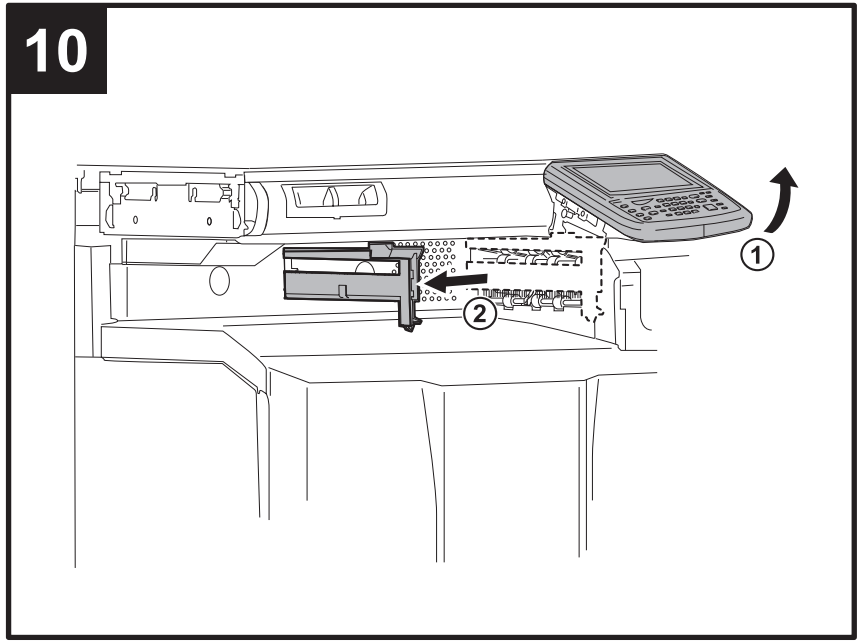
10
1
2

11

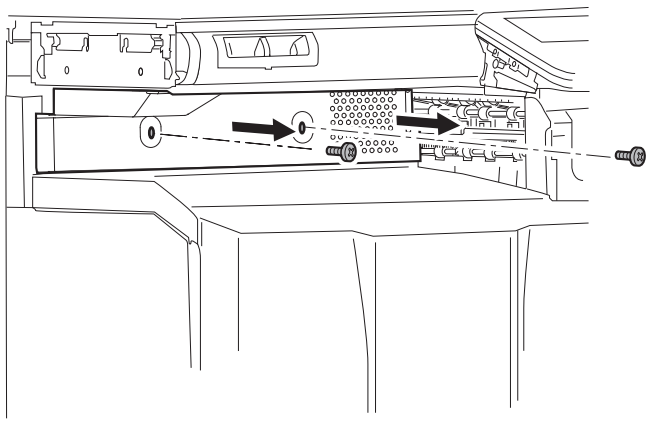

12

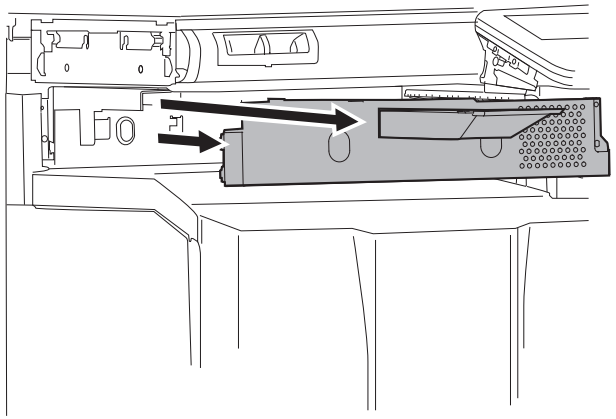

13

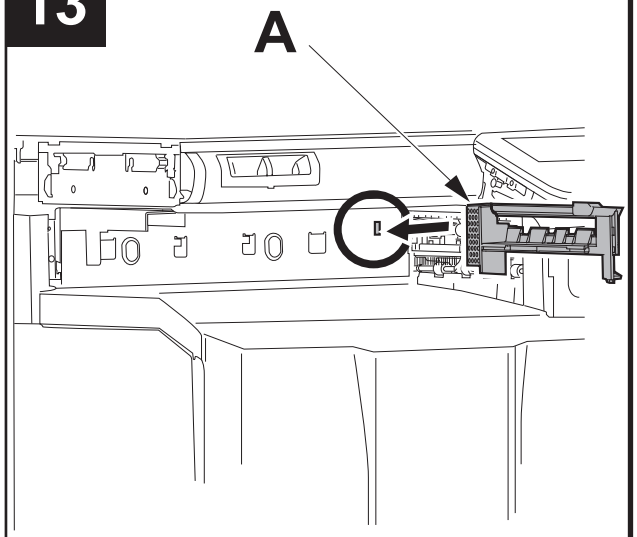

14

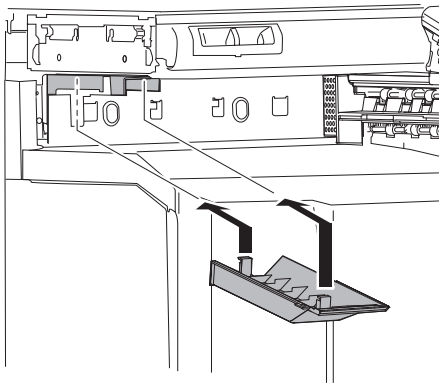

15

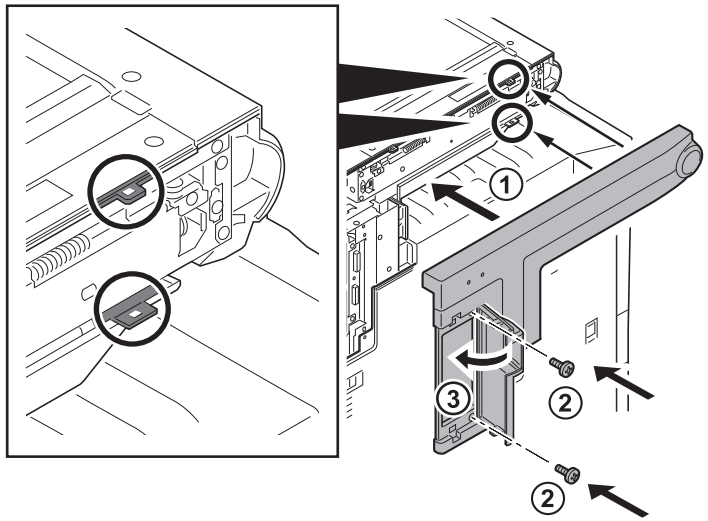

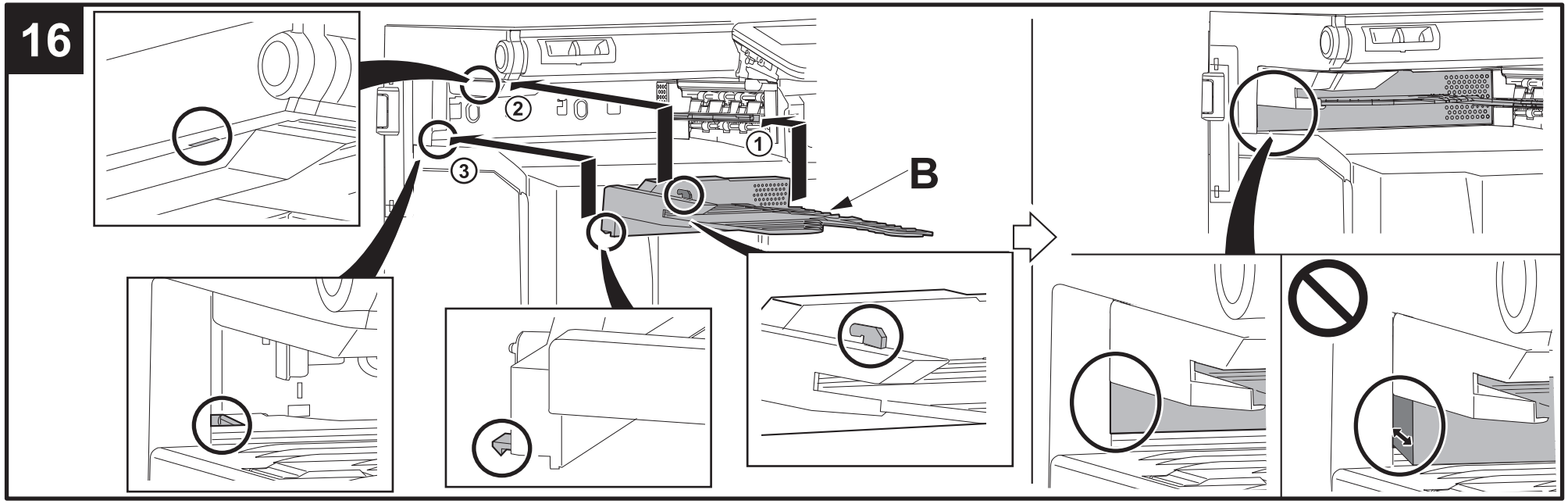
16
1
2
3
B

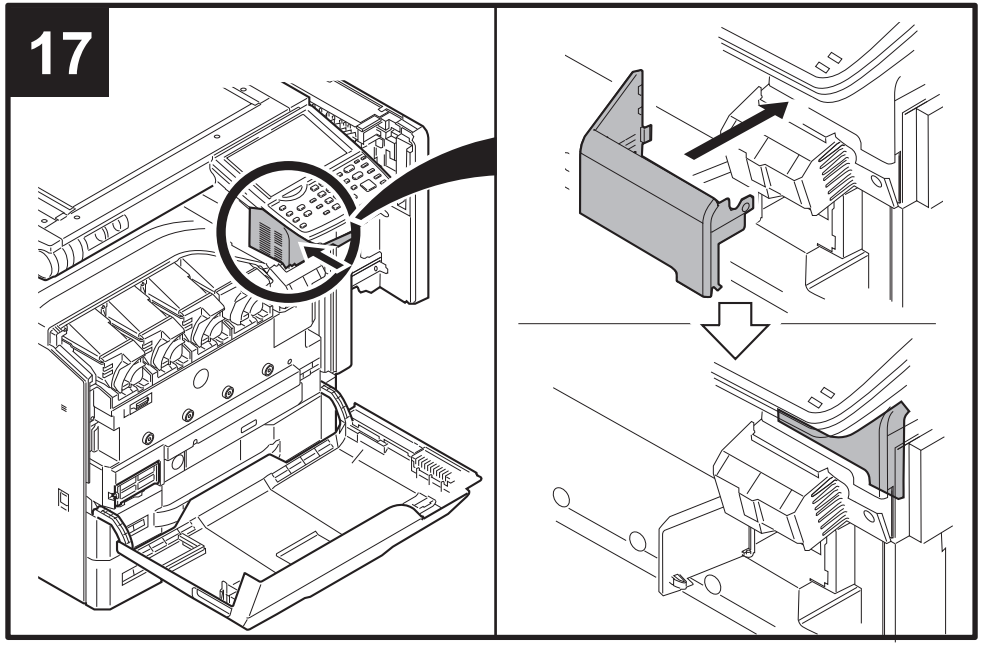
17

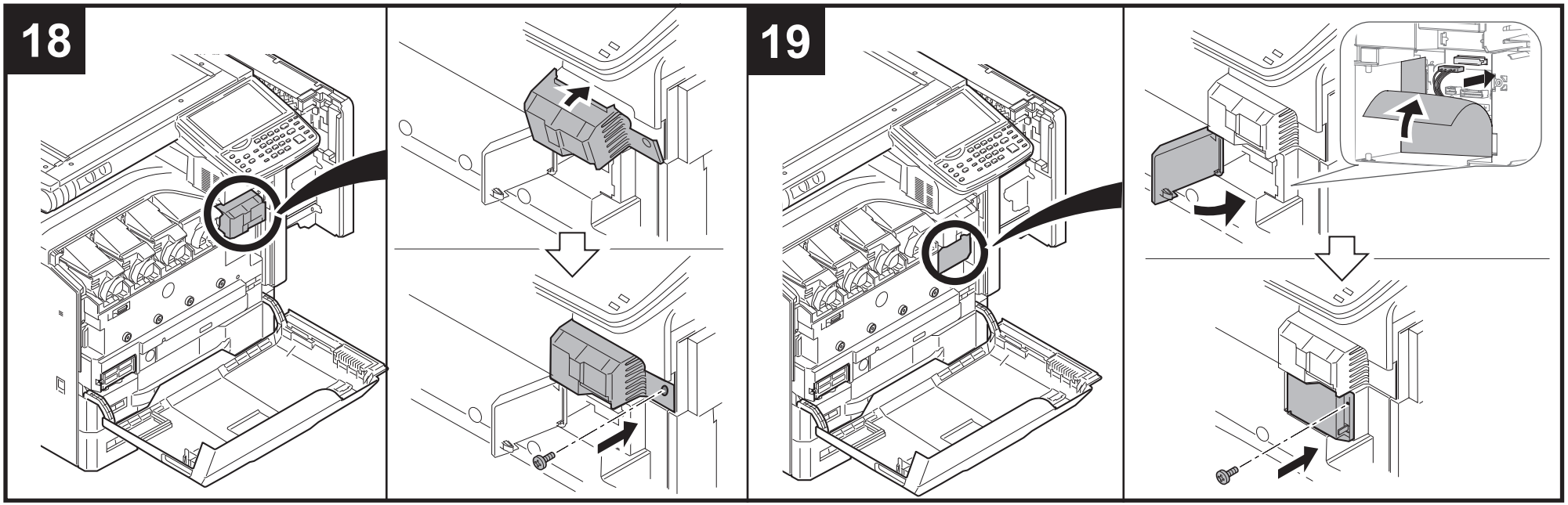
18
19

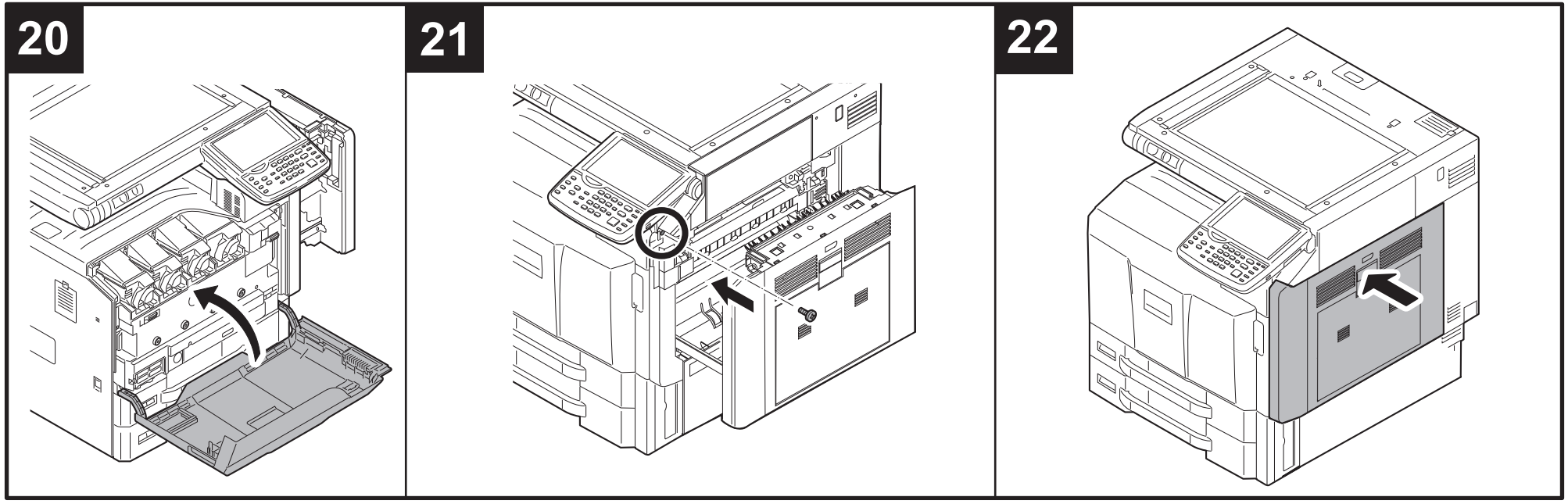
20
21
22

23

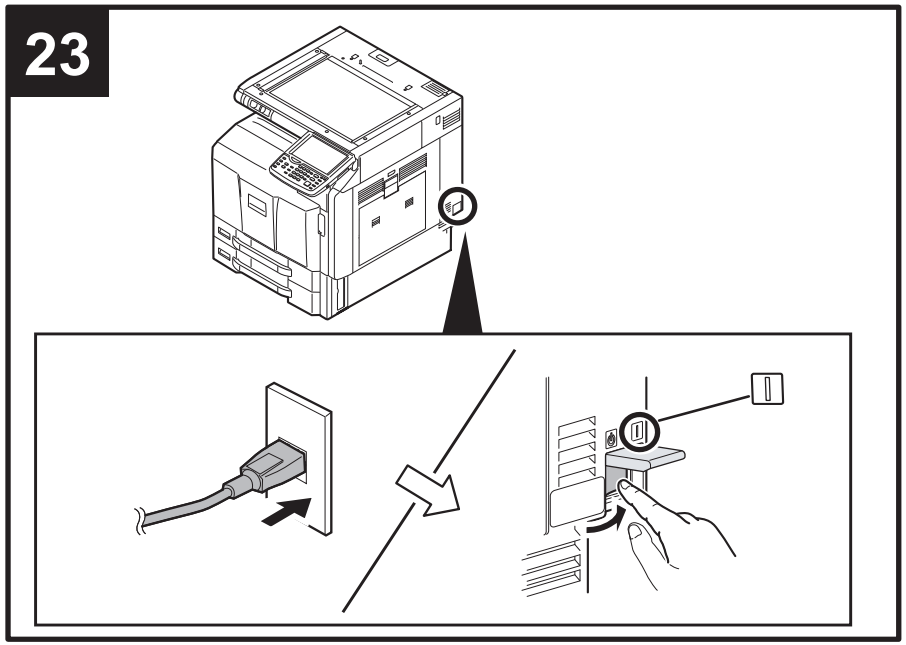

24

ENG Enter maintenance mode U211 "Set Enhance connection", and select Inner Job Separator.

FR Passer en mode maintenance U211, cliquer sur "Set Enhance connection" et sélectionner Inner Job Separator.

ES Entre en el modo de mantenimiento U211 "Set Enhance connection" y seleccione Inner Job Separator.

DE Schalten Sie in den Wartungsmodus U211 „Set Enhance connection“ und wählen Sie Inner Job Separator.

IT Introdurre la modalità manutenzione U211 "Set Enhance connection", e selezionare Inner Job Separator.

CN 进入维护模式，在U211 Set Enhance connection 中选择Inner Job Separator。

KO 메인터넌스 모드에 들어가 U211 Set Enhance connection에서 Inner Job Separator를 선택합니다.

JP メンテナンスモードに入り、U211エンハンス接続設定にてInner Job Separatorを選択する。

303NZ5671004

2013.5
303NZ56710-04

INSTALLATION GUIDE FOR 100-SHEETS INNER JOB SEPARATOR

INSTALLATION GUIDE

GUIDE D’INSTALLATION

GUÍA DE INSTALACION

INSTALLATIONSANLEITUNG

GUIDA ALL’INSTALLAZIONE

安装手册

설치안내서

設置手順書

JS-732

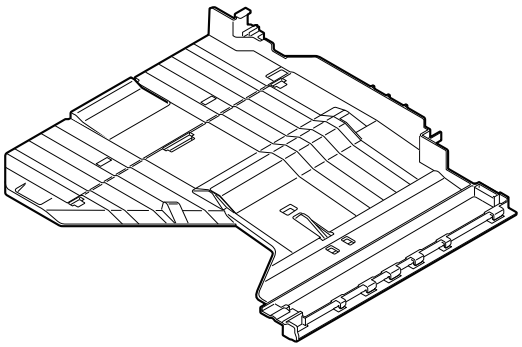

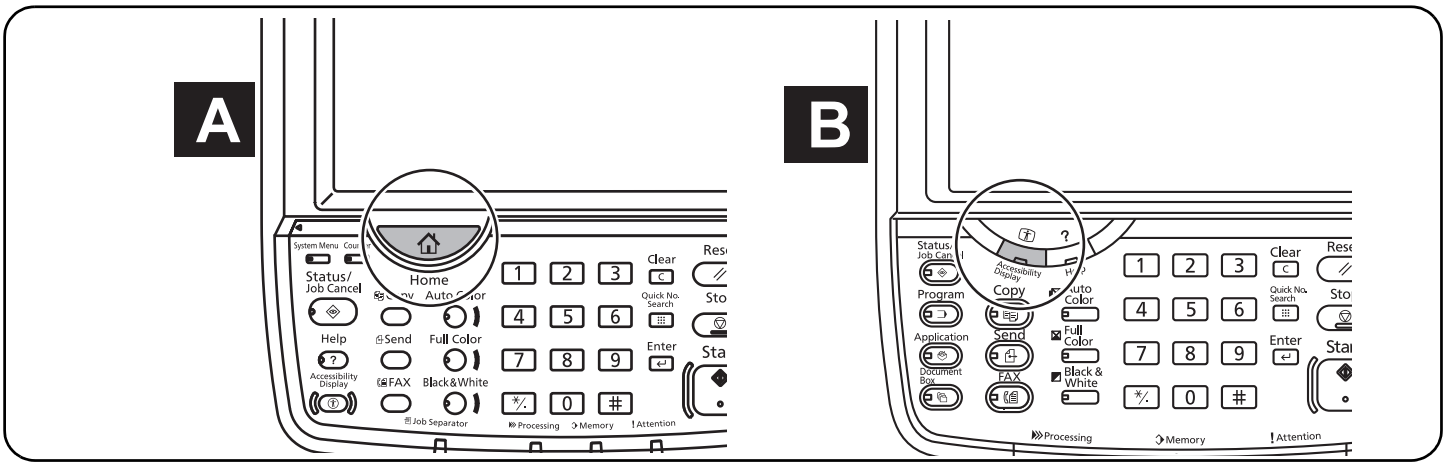

English A different procedure is required depending on the product which is installed with this unit.Each procedure is described in the following pages.

A:When installing on a machine which has the 'HOME' key in the operation panel, see Page 1 to Page 10.

B:When installing on a machine which has the 'Accessibility Display' key in the operation panel, see Page 11 to Page 21.

Français Une procédure différente est requise selon le produit qui est installé avec cette unité.Chaque procédure est décrite dans les pages suivantes.

A:Lors de l'installation sur une machine disposant de la touche 'Accueil' sur le panneau de commande, voir Page 1 à Page 10.

B:Lors de l'installation sur une machine disposant de la touche 'Affich. accessibilité' sur le panneau de commande,voir Page 11 à Page 21.

Español El procedimiento es diferente según el producto que se instale con esta unidad.En las siguientes páginas, se describe cada procedimiento.

A:Instalación en una máquina que dispone de la tecla 'Inicio' en el panel de controles,consulte las páginas de la 1 a la 10.

B:Instalación en una máquina que dispone de la tecla 'Pantalla acceso' en el panel de controles,consulte las páginas de la 11 a la 21.

Deutsch Je nach verwendetem Modell ist eine andere Vorgehensweise zur Installation dieses Teils erforderlich.Die unterschiedlichen Vorgehensweisen werden auf den folgenden Seiten erläutert.

A:Bei Installation an einem Gerät mit der Taste 'Startseite' im Bedienfeld siehe Seiten 1 bis 10.

B:Bei Installation an einem Gerät mit der Taste 'Zugriffsanzeige' im Bedienfeld siehe Seiten 11 bis 21.

Italiano Si richiede una procedura diversa in funzione del prodotto su cui è installata l'unità.Le singole procedure sono descritte nelle pagine seguenti.

A:Installazione su una macchina con tasto 'Home' sul pannello comandi,vedere le pagine da 1 a 10.

B:Installazione su una macchina con tasto 'Visual. Accessibilità' sul pannello comandi,vedere le pagine da 11 a 21.

简体中文 根据安装对象，安装步骤略有不同。各个步骤记载在下面的页面。

A: 安装操作面板上有 ‘ 主界面 ’ 按键的机器时；请参见 P1-P10。

B: 安装操作面板上有 ‘ 扩大显示 ’ 按键的机器时；请参见 P11-P21。

한국어 이 장치에 설치되는 제품에 따라 절차가 다릅니다 . 다음 페이지에서 각 절차를 설명합니다 .

A: 조작판넬에 ' 홈 ' 키가 있는 기기에 설치하는 경우 1 페이지 ~10 페이지를 참조하십시오 .

B: 조작판넬에 ' 유니버셜 ' 키가 있는 기기에 설치하는 경우 11 페이지 ~21 페이지를 참조하십시오 .

日本語 装着する対象によって、取付手順は異なります。それぞれ、以下のページに記載しています。

A: 操作パネルに ‘ ホーム ’ キーがある機械に設置する場合;1 ページ～ 10 ページ

B: 操作パネルに ‘ ユニバーサル ’ キーがある機械に設置する場合;11 ページ～ 21 ページ

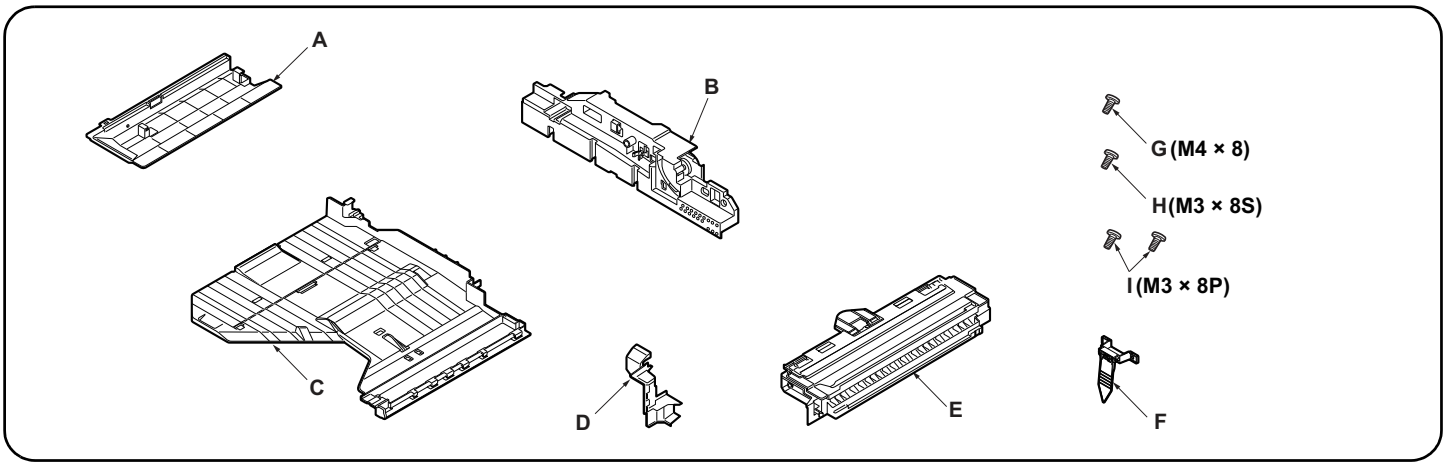

English

Supplied parts

A. Scanner bottom cover 1
B. Drive unit 1
C. Inner tray 1
D. Eject unit cover 1
E. Eject unit 1
F. Stopper paper 1
G. M4 × 8 screw 1
H. S Tite screw M3 × 8 1
I. P Tite screw M3 × 8 2
*(G) is not used.

Be sure to remove any tape and/or cushioning materials from the parts supplied.

Français

Pièces fournies

A. Capot inférieur du scanner 1
B. Unité d'entraînement 1
C. Bac intérieur 1
D. Capot de l'unité d'éjection 1
E. Unité d'éjection 1
F. Butée de papier 1
G. Vis M4 × 8 1
H. Vis S Tite M3 × 8 1
I. Vis P Tite M3 × 8 2
*(G) n'est pas utilisé.

Veillez à retirer les morceaux de bande adhésive et/ou les matériaux de rembourrage des pièces fournies.

Español

Partes suministradas

A. Cubierta inferior del escáner 1
B. Unidad de accionamiento 1
C. Bandeja interna 1
D. Cubierta de la unidad de salida 1
E. Unidad de salida 1
F. Tope de papel 1
G. Tornillo M4 × 8 1
H. Tornillo S Tite M3 × 8 1
I. Tornillo P Tite M3 × 8 2
*(G) no se utiliza.

Asegúrese de despegar todas las cintas y/o material amortiguador de las partes suministradas.

Deutsch

Gelieferte Teile

A. Untere Abdeckung des Scanners 1
B. Antriebseinheit 1
C. Innere Ablage 1
D. Abdeckung der Ausgabeeinheit 1
E. Ausgabeeinheit 1
F. Papieranschlag 1
G. Schraube M4 x 8 1
H. S-Tite-Schraube M3 × 8 1
I. P-Tite-Schraube M3 × 8 2
*(G) wird nicht benötigt.

Stellen Sie sicher, dass sämtliche Klebebänder und/oder Polstermaterial von den gelieferten Teilen entfernt wurden.

Italiano

Parti di fornitura

A. Coperchio inferiore dello scanner 1
B. Unità guida 1
C. Vassoio interno 1
D. Coperchio dell'unità di espulsione 1
E. Unità di espulsione 1
F. Fermo carta 1
G. Vite M4 × 8 1
H. Vite S Tite M3 × 8 1
I. Vite P Tite M3 × 8 2
*(G) non è utilizzato.

Rimuovere tutti i nastri adesivi e/o i materiali di protezione dalle parti fornite.

简体中文

附属品

A. 扫描仪底部盖板 1
B. 驱动单元 1
C. 内部托盘 1
D. 出纸单元盖板 1
E. 出纸单元 1
F. 纸张挡板 1
G. M4×8 螺丝 1
H. 紧固型 S 螺丝 M3×8 1
I. 紧固型 P 螺丝 M3×8 2
※ 不使用（G）

如果附属品上带有固定胶带，缓冲材料时务必揭下。

한국어

동봉품

A. 스캐너 밑커버 1
B. 구동 유니트 1
C. 내부트레이 1
D. 배출 유니트 커버 1
E. 배출 유니트 1
F. 스토퍼 용지 1
G. 나사 M4×8 1
H. 나사 M3×8S 타이트 1
I. 나사 M3×8P 타이트 2
※(G) 는 사용되지 않습니다 .

동봉품에 고정 테이프 , 완충재가 붙어 있는 경우에는 반드시 제거하십시오 .

日本語

同梱品

A. スキャナー底カバー 1
B. 駆動ユニット 1
C. 内部トレイ 1
D. 排出ユニットカバー 1
E. 排出ユニット 1
F. ペーパーストッパー 1
G. ビス M4×8 1
H. ビス M3×8S タイト 1
I. ビス M3×8P タイト 2
※(G) は、使用しません。

同梱品に固定テープ、緩衝材がついている場合は、必ず取り外すこと。

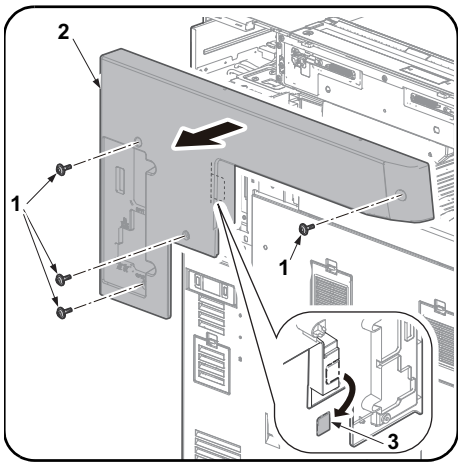

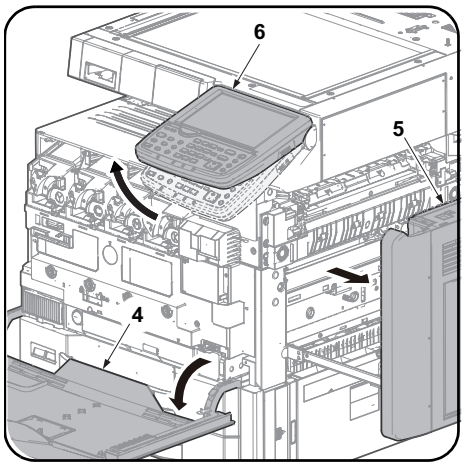

Before installing the JS-732, make sure that the MFP's main power switch is turned off and that its power cord is unplugged from the power outlet.

Procedure

1. Remove the four screws (1).Remove the left upper cover(2) .
2. Remove the breakaway cover (3) from the left upper cover (2).
3. Open the front cover (4) on the MFP.
4. Pull out the paper conveyor cover (5).
5. If the operation panel (6) is lowered, raise it to the top position.

Avant d'installer l'JS-732, s'assurer que l'interrupteur d'alimentation principal du MFP est coupé et que le cordon d'alimentation est débranché de la prise secteur.

Procédure

1. Retirez les quatre vis (1).Retirer le capot supérieur gauche (2).
2. Retirez le capot détachable (3) du capot supérieur gauche (2).
3. Ouvrir le capot avant (4) sur le MFP.
4. Sortir le capot du transporteur du papier (5).
5. Si le panneau de commande (6) est abaissé, le relever dans sa position maximum.

Antes de instalar el JS-732, asegúrese de que el interruptor principal de la alimentación de la MFP esté desconectado y que su cable de alimentación esté desenchufado de la toma de corriente.

Procedimiento

1. Quite los cuatro tornillos (1).Quite la cubierta superior izquierda (2).
2. Quite la cubierta de separación (3) de la cubierta superior izquierda (2).
3. Abra la cubierta frontal (4) en la MFP.
4. Extraiga la cubierta de la unidad de transporte de papel (5).
5. Si el panel de trabajo (6) está bajo, levántelo hasta la posición superior.

Vor dem Einbau des JS-732 muss der MFP-Hauptschalter ausgeschaltet und das Netzkabel von der Steckdose abgezogen sein.

Verfahren

1. Entfernen Sie die vier Schrauben (1).Entfernen Sie die linke obere Abdeckung (2).
2. Entfernen Sie die Abdeckung mit der Sollbruchstelle (3) aus der linken oberen Abdeckung (2).
3. Öffnen Sie die vordere Abdeckung (4) des MFP.
4. Entfernen Sie die Abdeckung des Papiertransports (5).
5. Falls das Bedienfeld (6) abgesenkt ist, bringen Sie es in die oberste Position.

Prima di installare l'unità JS-732, assicurarsi che l'interruttore principale dell'MFP sia spento e che il suo cavo di alimentazione sia scollegato presa di corrente.

Procedura

1. Rimuovere le quattro viti (1).Rimuovere il coperchio superiore sinistro (2).
2. Rimuovere il coperchio ad aggancio rapido (3) dal coperchio superiore sinistro (2).
3. Aprire il pannello anteriore (4) sull'MFP.
4. Estrarre il coperchio di trasporto carta (5).
5. Se il pannello operativo (6) è abbassato, sollevarlo alla posizione in alto.

安装 JS-732 时，请务必将 MFP 主机电源关闭，关拔下电源插头再进行安装作业。

安装步骤

1. 取下 4 颗螺丝（1）。取下左上盖板（2）。
2. 取下左上盖板（2）的组合盖板（3）。
3. 打开 MFP 主机的前盖板（4）。
4. 拉出输纸盖板（5）。
5. 操作面板（6）处于低位时，将其升到最高位置。

JS-732 을 부착할 때에는 반드시 MFP 본체의 주 전원 스위치를 OFF 로 하고 전원 플러그를 제거하고 작업을 할 것 .

설치순서

1. 나사 (1) 4 개를 제거합니다 . 좌측 상커버 (2) 를 제거합니다 .
2. 좌측 상 커버 (2) 에서 분리 커버 (3) 를 제거합니다 .
3. MFP 본체의 전면커버 (4) 를 엽니다 .
4. 반송커버 (5) 를 당겨 냅니다 .
5. 조작판넬 (6) 이 내려가 있는 경우에는 위로 올립니다 .

JS-732 を取り付ける際は、必ず MFP 本体の主電源スイッチを OFF にし、電源プラグを外して作業をおこなうこと。

取付手順

1. ビス (1)4 本を外す。左上カバー(2) を取り外す。
2. 左上カバー(2) の割りカバー(3) を切り取る。
3. MFP 本体の前カバー(4) を開く。
4. 搬送カバー(5) を引き出す。
5. 操作パネル (6) が下がっている場合は上位置に上げる。

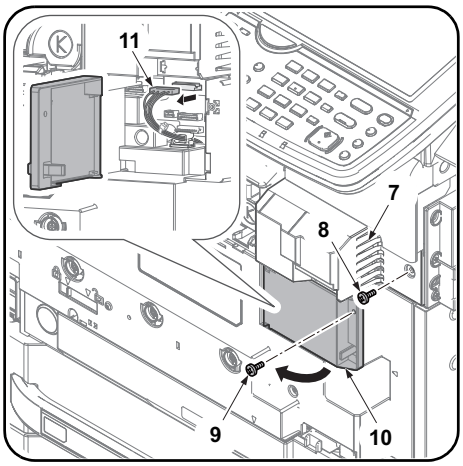

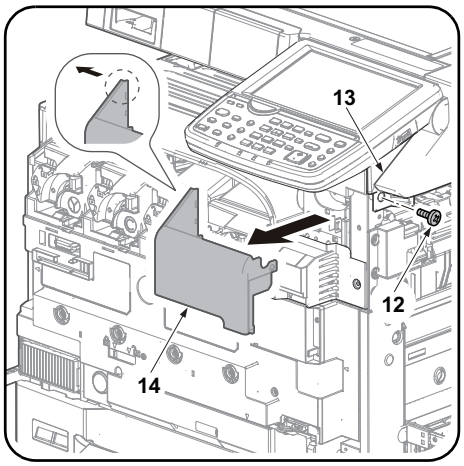

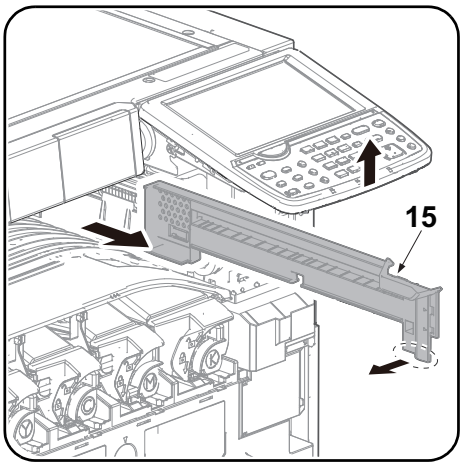

6. Remove the screw (8) from the fan cover (7).
Full-color machines only
7. Remove the screw (9).Open the inner cover (10).Unplug the connector (11).
*Take care not to get the wire saddle fallen off.

8. Remove the screw (12) and pull the upper right cover (13) outwards slightly while removing the front right cover (14).
Remove the right front cover (14) by pulling the part in the dotted circle outwards.

9. Remove the eject cover (15).
*Release the operation panel lock. Lift up the operation panel.
* Pull the lower front side to the left before removing the cover.
*The eject cover (15) which was removed is not used.

---

6. Retirez la vis (8) du capot du ventilateur (7).
Machines entierement en couleurs uniquement
7. Retirez la vis (9). Ouvrez le capot interne (10). Débranchez le connecteur (11).
*Prendre soin à ne pas faire tomber le serre-câble.

8. Retirez la vis (12) et tirer légèrement le capot supérieur droit (13) vers l'extérieur tout en déposant le capot avant droit (14).Retirez le capot avant droit (14) en tirant la partie dans le cercle en pointillés.

9. Retirez le capot d'éjection (15).
*Libérez le verrou du panneau de commande.Soulevez le panneau de commande.
* Tirer le côté avant inférieur sur la gauche avant de retirez le capot.
*Le capot de sortie (15) qui a été retiré n'est pas utilisé.

---

6. Quite el tornillo (8) de la cubierta del ventilador (7).
Maquinas a todo color solamente
7. Quite el tornillo (9). Abra la cubierta interna (10). Desenchufe el conector (11).
*Tenga cuidado de que no se caiga el pasador de cables.

8. Quite el tornillo (12) y saque la cubierta superior derecha (13) ligeramente mientras quita la cubierta frontal derecha (14).Quite la cubierta frontal derecha (14) tirando hacia afuera de la parte en el círculo punteado.

9. Quite la cubierta de expulsión (15).
*Libere el bloqueo del panel de controles. Levante el panel de controles.
* Tire del lado frontal inferior hacia la izquierda antes de quitar la cubierta.
*No se utiliza la cubierta de expulsión (15) que se quitó.

---

6. Entfernen Sie die Schraube (8) der Lüfterabdeckung (7).
nur Farbgeräte
7. Entfernen Sie die Schraube (9). Öffnen Sie die innere Abdeckung (10). Ziehen Sie den Stecker (11) ab.
*Stellen Sie sicher, dass der Kabelsattel nicht herunterfällt.

8. Entfernen Sie die Schraube (12) und ziehen Sie die obere rechte Abdeckung (13) vorsichtig nach außen, während Sie gleichzeitig die vordere rechte Abdeckung (14) entfernen.
Entfernen Sie die rechte vordere Abdeckung (14), indem Sie das Teil, das in der Zeichnung mit einem gepunkteten Kreis markiert ist, nach außen ziehen.

9. Entfernen Sie die Abdeckung der Ausgabeeinheit (15).
*Lösen Sie die Verriegelung des Bedienfelds. Heben Sie das Bedienfeld nach oben an.
* Bevor Sie die Abdeckung entfernen, ziehen Sie die untere Vorderseite nach links.
*Die gerade entfernte Abdeckung des Papierauslaufs (15) wird nicht mehr benötigt.

---

6. Rimuovere la vite (8) dal coperchio ventola (7).
Solo dispositivi a colori
7. Rimuovere la vite (9). Aprire il coperchio interno (10). Scollegare il connettore (11).
*Attenzione a non fare cadere la sella di supporto filo.

8. Rimuovere la vite (12) e tirare il coperchio superiore destro (13) leggermente verso l'esterno mentre si rimuove il coperchio anteriore destro (14).
Rimuovere il coperchio anteriore destro (14) tirando verso l'esterno la parte nel cerchio tratteggiato.

9. Rimuovere il coperchio di espulsione carta (15).
*Sbloccare il pannello comandi.Sollevare il pannello comandi.
* Tirare il lato anteriore in basso a sinistra prima di rimuovere il coperchio.
*Il coperchio di uscita (15) rimosso non viene utilizzato.

---

6. 卸下风扇盖板（7）的 1 颗螺丝（8）。
仅限彩色机器
7. 取下 1 颗螺丝（9）。打开内侧盖板（10）。取下接插件（11）。
※ 请注意不要让束线夹脱落。

8. 卸下 1 颗螺丝（12），稍稍拉出右上部盖板（13）的同时，拆下右前部盖板（14）。
通过向外拉虚线圈出的部分卸下右前盖板（14）。

9. 拆下排纸盖板（15）。
※ 解除操作部的锁定。把操作面板向上抬起。
※ 将盖板前下部向左侧拉出以拆卸。
※ 请不要使用取下的排纸盖板（15）。

---

6. 팬커버 (7) 의 나사 (8) 1 개를 제거합니다 .
컬러기 만
7. 나사 (9) 를 제거합니다 . 내부 커버 (10) 를 엽니다 . 커넥터 (11) 를 분리합니다 .
※ 와이어 새들이 빠지지 않도록 주의합니다 .

8. 나사 (12) 1 개를 제거하고 오른쪽 상커버 (13) 를 조금 당기면서 오른쪽 전면 커버 (14) 를 제거합니다 . 점선 원으로 표시된 부분을 바깥 방향으로 당겨서 오른쪽 전면커버 (14) 를 제거합니다 .

9. 배출커버 (15) 를 제거합니다 .
※ 조작판넬의 잠금을 해제합니다 . 조작판넬을 위로 들어 올립니다 .
※ 전면 아래쪽을 좌측으로 당겨서 제거합니다 .
※ 분리한 배출 커버 (15) 는 사용되지 않습니다 .

---

6. ファンカバー(7) のビス (8)1 本を外す。
カラー機 のみ
7. ビス (9)1 本を外す。インナーカバー(10) を開ける。コネクター(11) を抜く。
※ ワイヤーサドルが外れないよう注意すること。

8. ビス (12)1 本を外し、右上カバー(13) を少し外に引っ張りながら右前カバー(14) を取り外す。
右前カバー(14) は、破線部を外側に引っ張るようにして外す。

9. 排出カバー(15) を取り外す。
※ 操作部のロックを解除する。操作パネルを上方向に上げる。
※ 前下側を左側に引いてから取り外す。
※ 取り外した排出カバー(15) は使用しない。

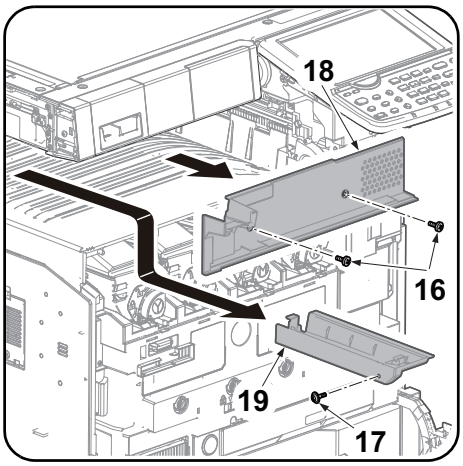

10. Remove the two screws (16).Remove the screw (17).Remove the rear tray cover (18) and scanner bottom cover (19).
*The scanner bottom cover(19) which was removed is not used.

---

10. Retirez les deux vis (16).Retirez la vis (17). Retirez le capot du support arrière (18) et le capot inférieur du scanner (19).
*Le capot inférieur du scanner (19) qui a été retiré n'est pas utilisé.

---

10. Quite los dos tornillos (16).Quite el tornillo (17).Quite la cubierta izquierda de la bandeja (18)y la cubierta inferior del escáner (19).
*No se utiliza la cubierta inferior del escáner (19) que se quitó.

---

10. Entfernen Sie die beiden Schrauben (16). Entfernen Sie die Schraube (17).Entfernen Sie die Abdeckung des hinteren Fachs (18) und die untere Abdeckung des Scanners (19).
*Die gerade entfernte untere Scannerabdeckung (19) wird nicht mehr benötigt.

---

10. Rimuovere le due viti (16).Rimuovere la vite (17).
Rimuovere il coperchio posteriore del vassoio (18) e il coperchio inferiore dello scanner (19).
*Il coperchio inferiore dello scanner (19) rimosso non viene utilizzato.

---

10. 取下 2 颗螺丝（16）。取下螺丝（17）。拆下托盘后 部盖板（18） 以及扫描仪底部盖板（19）。
※ 请不要使用取下的扫描仪底部盖板（19）。

---

10. 나사 (16) 두 개를 제거합니다 . 나사 (17) 를 제거합니다 . 트레 이 뒷커버 (18) 및 스캐너 밑커버 (19) 를 제거합니다 .
※ 분리한 스캐너 밑커버 (19) 는 사용되지 않습니다 .

---

10. ビス (16)2 本を外す。ビス (17)1 本を外す。トレイ後カバー(18) およびスキャナー底カバー(19) を取り外す。
※ 取り外したスキャナー底カバー(19) は使用しない。

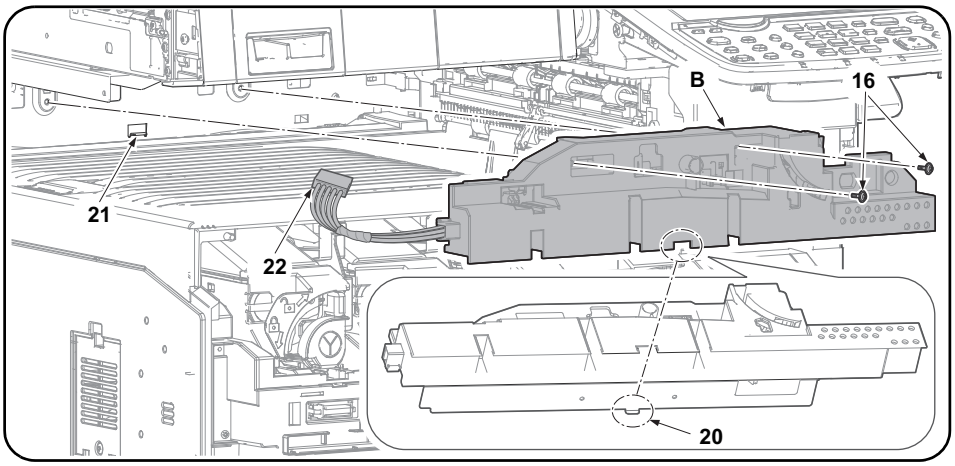

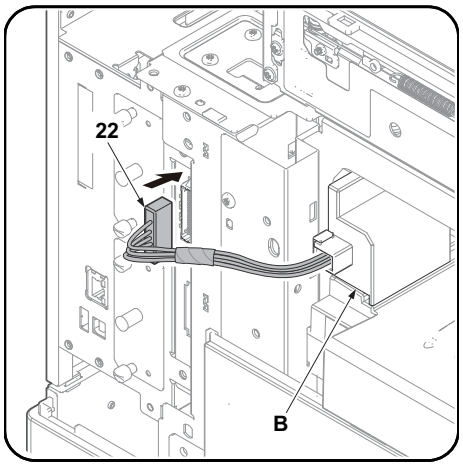

11. Insert the hook (20) on the underside of the drive unit (B) into the respective positioning hole (21) in the back plate, using the location of the notch on the front as a guide. Then secure the drive unit using the 2 M4 × 8 screws (black) (16) removed in step 10.
NOTICE
When installing the drive unit (B), take care not to rub it against the ribs on the top of the MFP tray.
Hold the connector (22) out of the way so that it does not become trapped.

12. Plug the connector (22) from the drive unit (B) into the MFP.

---

11. Insérer le crochet (20) sous l'unité d'entraînement (B) dans le trou de positionnement approprié (21) sur la plaque arrière, en prenant comme guide l'encoche à l'avant. Puis fixer l'unité d'entraînement avec les 2 vis M4 × 8 (noires) (16) retirées au point 10.
REMARQUE
À l'installation de l'unité d'entraînement (B), veiller à ne pas le frotter contre les nervures sur le haut du bac MFP.
Écarter le connecteur (22) de sorte qu'il ne soit pas coincé.

12. Bancher le connecteur (22) de l'unité d'entraînement (B) sur le MFP.

---

11. Inserte el gancho (20) del lado inferior de la unidad de accionamiento (B) en el orificio de posición respectivo (21) de la placa posterior, con la ubicación de la muesca en el frente como guía. Después, fije la unidad de accionamiento con los 2 tornillos M4 × 8 (negros) (16) quitados en el paso 11.
AVISO
Durante la instalación de la unidad de accionamiento (B), tenga cuidado de no rozar las nervaduras de la parte superior de la bandeja de la MFP.Mantenga el conector (22) alejado para no atraparlo.

12. Enchufe el conector (22) de la unidad de accionamiento (B) en la MFP.

---

11. Setzen Sie die Haken (20) auf der Unterseite der Antriebseinheit (B) in die entsprechenden Aufnahmen (21) der Rückwand. Benutzen Sie die Aussparungen auf der Vorderseite als Orientierung. Befestigen Sie die Antriebseinheit mit den 2 M4 x 8 Schrauben (schwarz) (16), die Sie in Schritt 10 gelöst haben.
ANMERKUNG
Beim Einsetzen der Antriebseinheit (B) achten Sie darauf, dass Sie diese nicht an den Nasen oben in der Ablage des MFP scheuern.Führen Sie den Stecker (22) so, dass dieser nicht eingeklemmt werden kann.

12. Stecken Sie den Stecker (22) in die Antriebseinheit (B) des MFP.

---

11. Inserire il gancio (20) sul lato inferiore dell'unità guida (B) nel rispettivo foro di posizionamento (21) sulla piastra posteriore, usando la posizione dell'intaglio sulla parte frontale come guida. Quindi fissare l'unità guida usando le 2 viti M4 × 8 (nere) (16) rimosse nel passo 10.
AVVISO
Quando si installa l'unità guida (B), fare attenzione a non sfregarla contro i rilievi sulla parte superiore del vassoio MFP.
Mantenere il connettore (22) all'esterno in modo che esso non rimanga intrappolato.

12. Inserire il connettore (22) dall'unità guida (B) nell'MFP.

---

11. 以前部的槽口位置为参考，将驱动单元 (B) 下部的卡扣 (20) 插入背板上各自的定位孔 (21)。然后使用步骤 10 中卸下的 2 颗螺丝 M4 × 8（黑）(16) 固定驱动单元。
注意
安装驱动单元 (B) 时，请小心勿触碰 MFP 托盘顶部的肋片。
避开接插件 (22) 以免其被卡住。

12. 将从驱动单元 (B) 引出的接插件 (22) 插入 MFP。

---

11. 전면의 노치 위치를 기준으로 활용하여 구동 유니트 (B) 아래쪽에 있는 후크 (20) 를 후면판의 해당 위치고정 구멍 (21) 에 삽입합니다 . 그런 다음 단계 10 에서 제거한 나사 M4 × 8 (흑)(16) 2 개로 구동 유니트를 고정합니다 .
주의
구동 유니트 (B) 를 설치할 때 이 장치가 MFP 트레이 상단의 리브 부위에 닿아서 스치지 않도록 주의하십시오 . 막히지 않도록 커넥터 (22) 를 잡습니다 .

12. 구동 유니트 (B) 의 커넥터 (22) 를 MFP 에 연결합니다 .

---

11. 駆動ユニット (B) 下側のフック (20) を前側の切り欠き位置を目安に後側板の位置決め穴 (21) に入れ、手順 10 のビス M4×8(黒) (16)2 本で固定する。
注意
駆動ユニット (B) を取り付ける時は、本体トレイ上のリブをこすらないように作業をすること。
コネクター(22) を挟まないように外に出しておくこと。

12. 駆動ユニット (B) からのコネクター(22) を MFP 本体に接続する。

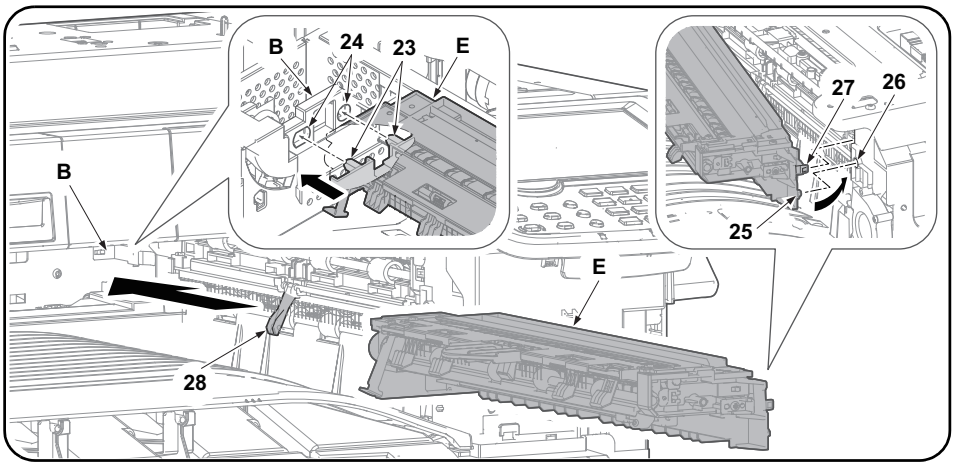

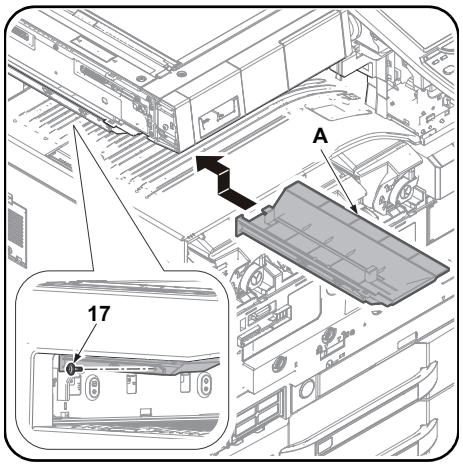

13. Insert the projection (23) on the back of the eject unit (E) into the hole (24) in the drive unit (B) and insert the projection on the front (25) into the hole (26) in the MFP frame to attach the eject unit (E).
Push the eject unit (E) to the right and fit the hook (27) in so that it clicks into place.
NOTICE
When installing the eject unit, take care not to dislodge the paper eject actuator (28).
After installing the unit, check the operation of the actuator.

14. Insert the 2 hooks on the scanner bottom cover (A) into the notches of the machine.Secure it with the screw (17) removed in step 10.
NOTICE
Take particular care to check that the hooks on the rear are securely engaged before tightening the screws.

---

13. Insérer la projection (23) à l'arrière de l'unité d'éjection (E) dans le trou (24) de l'unité d'entraînement (B) et insérer la projection à l'avant (25) dans le trou (26) du châssis de MFP pour attacher l'unité d'éjection (E).Pousser l'unité d'éjection (E) vers la droite et emboîter le crochet (27) jusqu'au déclic.
REMARQUE
À l'installation de l'unité d'éjection, veiller à ne pas déplacer l'actionneur d'éjection du papier (28).
Après avoir installé l'unité, vérifier le bon fonctionnement de l'actuateur.

14. Introduisez les 2 crochets du capot inférieur du scanner (A) dans les encoches de la machine.Fixez-les avec la vis (17) retirée à l'étape 10.
REMARQUE
S'assurer tout particulièrement que les crochets à l'arrière sont bien engagés avant de serrer les vis.

---

13. Inserte el saliente (23) de la parte posterior de la unidad de salida (E) en el orificio (24) de la unidad de accionamiento (B) e inserte el saliente del frente (25) en el orificio (26) de la carcasa de la MFP para fijar la unidad de salida (E).Presione la unidad de salida (E) hacia la derecha y encaje el gancho (27) hasta que escuche un clic.
AVISO
Durante la instalación de la unidad de salida, tenga cuidado de no desplazar el actuador de expulsión de papel (28).Después de instalar la unidad, compruebe el funcionamiento del actuador.

14. Inserte los 2 enganches en la cubierta inferior del escáner (A) en las ranuras de la máquina.Fíjelo con el tornillo (17) que quitó en el paso 10.
AVISO
Antes de apretar los tornillos, tenga especial cuidado de comprobar si los ganchos en la parte posterior están enganchados de forma segura.

---

13. Setzen Sie die Nase (23) an der Rückseite der Ausgabeeinheit (E) in das Loch (24) der Antriebseinheit (B). Dann setzen Sie die Nase (25) vorne in das Loch (26) des MFP-Rahmens, um die Ausgabeeinheit (E) anzubringen.Schieben Sie die Ausgabeeinheit (E) nach rechts und drücken Sie auf die Haken (27), damit diese einrasten.
ANMERKUNG
Achten Sie beim Einsetzen der Ausgabeeinheit darauf, dass der Papierausgabesensor (28) in der korrekten Position verbleibt.Nachdem die Ausgabeeinheit installiert ist, prüfen Sie die korrekte Arbeitsweise des Sensors.

14. Setzen Sie die beiden Nasen der unteren Scannerabdeckung (A) in die Aussparungen im Gerät.Befestigen Sie diese mit der Schraube (17) aus Schritt 10.
ANMERKUNG
Prüfen Sie sorgfältig, ob die Haken auf der Rückseite richtig eingerastet sind, bevor Sie die Schrauben festziehen.

---

13. Inserire la parte sporgente (23) sul retro dell'unità di espulsione (E) nel foro (24) dell'unità guida (B), e inserire la parte sporgente sul lato anteriore (25) nel foro (26) del telaio dell'MFP per fissare l'unità di espulsione (E).Spingere l'unità di espulsione (E) alla destra e inserire il gancio (27) in modo che esso scatti in posizione.
AVVISO
Quando si installa l'unità di espulsione, fare attenzione a non rimuovere l'attuatore (28) di espulsione carta.Dopo l'installazione dell'unità, controllare il funzionamento dell'attuatore.

14. Inserire i 2 ganci presenti sul coperchio inferiore dello scanner (A) negli incavi previsti sulla macchina.Fissare con la vite (17) rimossa al punto 10.
AVVISO
Fare particolare attenzione per controllare che i ganci sul retro siano agganciati in modo sicuro prima di stringere le viti.

---

13. 通过将出纸单元 (E) 背部的突出部分 (23) 插入驱动单元 (B) 中的孔 (24) 中，并将前部的突出部分 (25) 插入 MFP 框架中的孔 (26) 中来安装出纸单元 (E)。
向右按出纸单元 (E) 并扣好卡扣 (27) 以使其固定到位。
注意
安装出纸单元时，请小心勿使出纸致动器 (28) 外露。
安装好该单元后，请检查致动器的操作。

14. 把扫描仪底部盖板（A）的 2 处挂钩插入到机器本体的缺口部。使用步骤 10 取下的 1 颗螺丝（17）来固定。
注意
拧紧该螺丝前，请特别注意要检查后部的卡扣是否牢固衔接。

---

13. 배출 유니트 (E) 후면의 프로젝션 (23) 을 구동 유니트 (B) 의 구멍 (24) 에 삽입하고 전면의 프로젝션 (25) 을 MFP 프레임의 구멍 (26) 에 삽입하여 배출 유니트 (E) 를 부착합니다 .
배출 유니트 (E) 를 오른쪽으로 밀고 제자리에 장착되도록 후크 (27) 를 맞춥니다 .
주의
배출 유니트를 설치할 때 용지 배출 액추에이터 (28) 를 제거하지 않도록 주의하십시오 .
유니트를 설치한 후 액추에이터의 작동을 확인하십시오 .

14. 스캐너 밑커버 (A) 의 후크 2 개를 본체의 홈에 삽입합니다 . 단계 10 에서 분리한 나사 (17) 로 고정합니다 .
주의
나사를 조이기 전에 후면의 후크가 단단히 결합되어 있는지 각별히 주의하여 확인하십시오 .

---

13. 排出ユニット (E) 後側の突起 (23) を駆動ユニット (B) の穴 (24) に入れ、前側の突起 (25) を本体フレームの穴 (26) に入れて排出ユニット (E) を取り付ける。
排出ユニット (E) を右側に押し、フック (27) がカチッと音がするまではめ込むこと。
注意
排出ユニットを取り付ける時は、排出のアクチュエーター(28) を外さないように作業をする。
取付後、アクチュエーターの動作確認を行うこと。

14. スキャナー底カバー(A) のフック 2 カ所を機械本体の切り欠きに挿入する。手順 10 で外したビス (17)1 本で固定する。
注意
特に後側のフックが確実に掛かっている事を確認した後、ビス固定をすること。

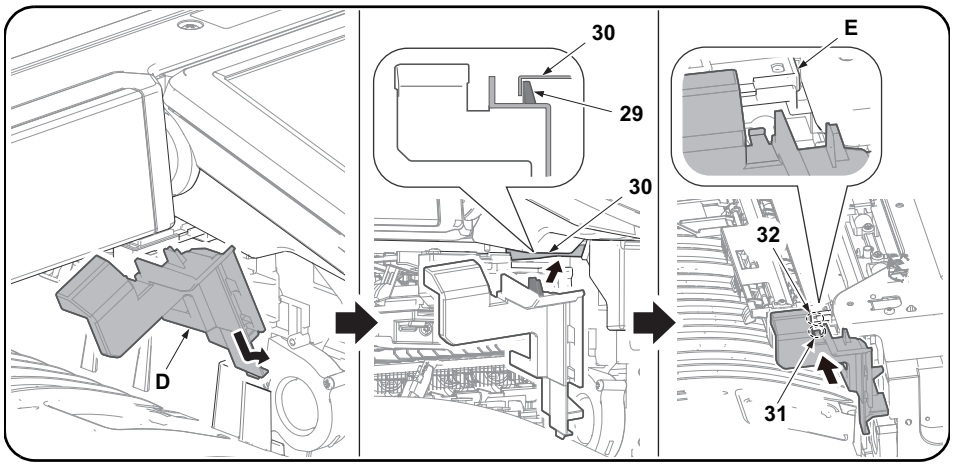

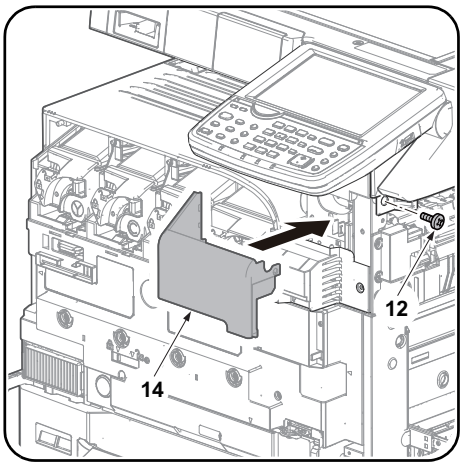

15. Insert the lower portion of the eject unit cover (D) into the right side of the MFP.
16. Insert the ribs (29) at the top into the right side of the MFP main unit frame (30).
17. Install the eject unit cover (D) by inserting its hook (31) into the hole (32) on the eject unit (E).
18. Install the front right cover (14) using the screw (12) removed in step 8.

---

15. Insérer la portion inférieure du capot de l'unité d'éjection (D) dans le côté droit de l'imprimante.
16. Insérer les nervures (29) au-dessus dans le côté droit du châssis de l'unité principale de l'imprimante (30).
17. Installer le capot de l'unité d'éjection (D) en insérant son crochet (31) dans le trou (32) sur l'unité d'éjection (E).
18. Installer le capot avant droit (14) à l'aide de la vis (12) déposée à l'étape 8.

---

15. Inserte la parte inferior de la cubierta de la unidad de expulsión (D) en el lado derecho del MFP.
16. Inserte las nervaduras (29) en la parte superior del lado derecho de la estructura (30) de la unidad principal del MFP.
17. Instale la cubierta (D) de la unidad de expulsión introduciendo su gancho (31) en el orificio (32) de la unidad de expulsión (E).
18. Instale la cubierta frontal derecha (14) usando el tornillo (12) quitado en el paso 8.

---

15. Setzen Sie den unteren Teil der Abdeckung der Ausgabeeinheit (D) auf der rechten Seite des MFP ein.
16. Setzen Sie die Lamellen (29) oben in den Rahmen (30) des MFP auf der rechten Seite ein.
17. Installieren Sie die Abdeckung der Ausgabeeinheit (D), indem Sie die Haken (31) in die Löcher (32) der Ausgabeeinheit (E) einsetzen.
18. Bringen Sie die vordere rechte Abdeckung (14) wieder an. Benutzen Sie die Schraube (12) aus Schritt 8.

---

15. Inserire la parte inferiore del coperchio dell'unità di espulsione (D) sul lato destro dell'MFP.
16. Inserire le nervature (29) presenti sulla parte superiore, nel lato destro del telaio dell'unità principale dell'MFP (30).
17. Installare il coperchio dell'unità di espulsione (D) inserendo i relativi ganci (31) nel foro (32) sull'unità di espulsione (E).
18. Installare il coperchio anteriore destro (14) utilizzando la vite (12) rimossa nel punto 8.

---

15. 把出纸单元盖板（D）的下侧插入机器右侧。
16. 把上侧的肋片（29）插入机器框架（30）的右侧。
17. 把出纸单元盖板（D）的挂钩（31）装到出纸单元（E）的洞（32）中。
18. 使用在步骤 8 中卸下的 1 颗螺丝（12）来固定右前盖板（14）。

---

15. 배출 유니트 커버 (D) 의 하단 부분을 MFP 의 우측에 삽입합니다 .
16. 상단의 리브 (29) 를 MFP 본체 프레임 (30) 의 우측에 장착합니다 .
17. 배출 유니트 (E) 의 구멍 (32) 에 후크 (31) 를 삽입하여 배출 유니트 커버 (D) 를 설치합니다 .
18. 단계 8 에서 제거한 나사 (12) 1 개로 오른쪽 전면커버 (14) 를 부착합니다 .

---

15. 排出ユニットカバー(D) の下側を MFP 本体右側に差し込む。
16. 上側のリブ (29) を MFP 本体フレーム (30) の右側に差し込む。
17. 排出ユニットカバー(D) のフック (31) を排出ユニット (E) の穴 (32) に入れて取り付ける。
18. 手順 8 で取り外したビス (12)1 本で右前カバー(14) を取り付ける。

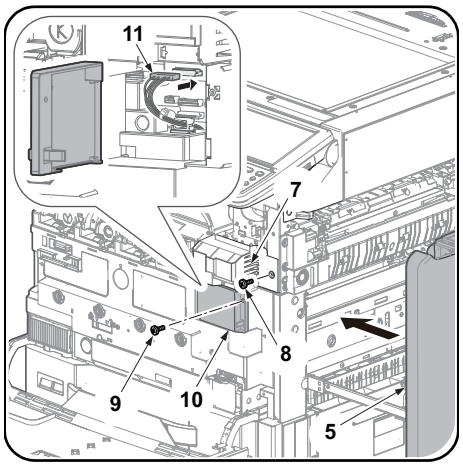

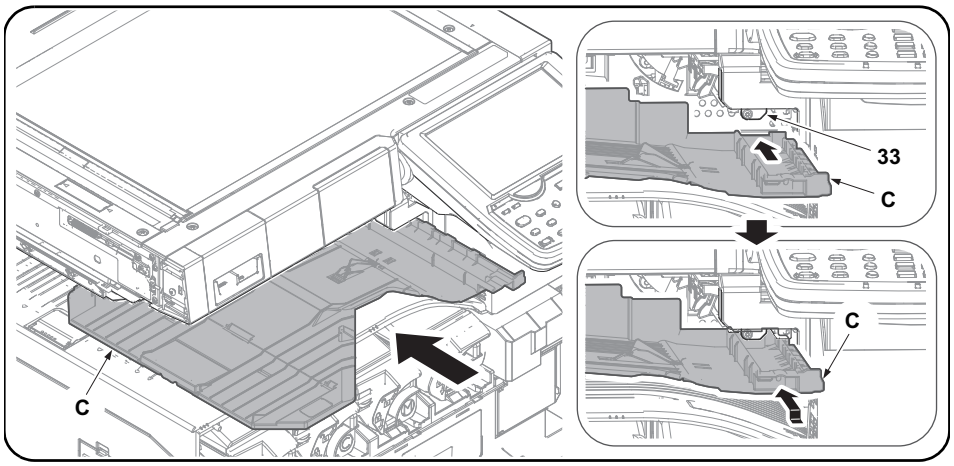

Full-color machines only

19. Plug in the connector (11) which was unplugged in step 7.Secure the inner cover (10) with the screw (9).

20. Secure the fan cover (7) using the screw (8) removed in step 6.
Close the paper conveyor cover (5).

21. Insert the right side portion of the inner tray (C) in the main unit.

22. While lowering the wall at the far end of the inner tray (C) so that it does not hit the rail (33), insert the inner tray (C) in the main unit.

23. Raise and hold the wall at the far end of the inner tray (C) above the front side of the rail (33), slide the inner tray (C) all the way in.

Machines entierement en couleurs uniquement

19. Branchez le connecteur (11) qui a été débranché à l'étape 7.Fixez le capot interne (10) avec la vis (9).

20. Fixer le capot du ventilateur (7) à l'aide de la vis (8) déposée à l'étape 6.
Refermer le capot du transporteur du papier (5).

21. Insérer la portion de droite du bac intérieur (C) dans l'unité principale.

22. Abaisser la cloison de l'extrémité la plus éloignée du bac intérieur (C) afin qu'elle ne heurte pas le rail (33) et insérer le bac intérieur (C) dans l'unité principale.

23. Soulever et maintenir la cloison de l'extrémité la plus éloignée du bac intérieur (C) au-dessus de l'avant du rail (33) et faire coulisser le bac intérieur (C) jusqu'au fond.

Maquinas a todo color solamente

19. Enchufe el conector (11) que desconectó en el paso 7.Fije la cubierta interna (10) con el tornillo (9).

20. Asegure la cubierta del ventilador (7) usando el tornillo (8) quitado en el paso 6.
Cierre la unidad de transporte de papel (5).

21. Inserte el lado derecho de la bandeja interna (C) en la unidad principal.

22. Mientras baja la pared en el extremo más lejano de la bandeja interna (C) para que no golpee el raíl (33), inserte la bandeja interna (C) en la unidad principal.

23. Levante y sujete la pared en el extremo más lejano de la bandeja interna (C) sobre la parte frontal del raíl (33), deslice la bandeja interna (C) hasta introducirla hasta el fondo.

---

nur Farbgeräte

19. Stecken Sie den Stecker (11) wieder ein, der in Schritt 7 gelöst wurde.Befestigen Sie die innere Abdeckung (10) mit der Schraube (9).

20. Bringen Sie die Lüfterabdeckung (7) wieder an. Benutzen Sie die Schraube (8) aus Schritt 6.Schließen Sie die Abdeckung des Papiertransports (5).

21. Setzen Sie den rechten Teil der inneren Ablage (C) in das Gerät ein.

22. Senken Sie die Rückwand am hinteren Ende der inneren Ablage (C) ein wenig ab, so dass diese nicht die Schiene (33) berührt. Gleichzeitig setzen Sie die innere Ablage (C) in das Gerät ein.

23. Senken Sie die Rückwand am hinteren Ende der inneren Ablage (C) ein wenig ab, halten diese gleichzeitig über der Vorderseite der Schiene (33) und setzen die innere Ablage (C) in das Gerät ein.

Solo dispositivi a colori

19. Collegare il connettore (11) scollegato al punto 7.Fissare il coperchio interno (10) con la vite (9).

20. Fissare il coperchio ventola (7) utilizzando la vite (8) rimossa nel punto 6.
Chiudere il coperchio di trasporto carta (5).

21. Inserire la parte lato destro del vassoio interno (C) nell'unità principale.

22. Tenendo abbassata la parete sull'estremità distante del vassoio interno (C), in modo da non colpire la guida (33), inserire il vassoio interno (C) nell'unità principale.

23. Sollevare e reggere la parete sull'estremità distante del vassoio interno (C) sopra il lato frontale della guida (33), quindi inserire a fondo il vassoio interno (C).

仅限彩色机器

19. 连接步骤 7 取下的接插件（11）。使用 1 颗螺丝（9）来固定内侧盖板（10）。

20. 使用在步骤 6 中卸下的 1 颗螺丝 (8) 来固定风扇盖板 (7)。
关闭输纸盖板 (5)

21. 把内部接纸盘（C）的右侧插入机器内。

22. 插入机器时，请不要让内部接纸盘（C）的里侧壁碰到导轨（33）。

23. 在超过导轨（33）前的位置，抬起内部接纸盘（C）的里侧壁后，把内部接纸盘向里侧滑动。

컬러기 만

19. 단계 7 에서 분리한 커넥터 (11) 를 연결합니다 . 나사 (9) 로 내부 커버 (10) 를 고정합니다 .

20. 순서 6 에서 제거한 나사 (8) 1 개로 팬커버 (7) 를 고정합니다 .
반송커버 (5) 를 닫습니다 .

21. 내부 트레이 (C) 의 우측 부분을 본체에 삽입합니다 .

22. 레일 (33) 에 부딪히지 않도록 내부 트레이 (C) 의 안쪽의 칸막이 부분을 낮추면서 본체에 내부 트레이 (C) 를 삽입합니다 .

23. 내부 트레이 (C) 의 안쪽의 칸막이 부분을 레일 (33) 의 전면 위로 올려서 유지하고 내부 트레이 (C) 를 안으로 최대한 밉니다 .

カラー機 のみ

19. 手順 7 で外したコネクター(11) を接続する。ビス (9)1 本でインナーカバー(10) を固定する。

20. 手順 6 で外したビス (8)1 本でファンカバー (7) を固定する。
搬送カバー(5) を閉める。

21. 内部トレイ (C) の右側を本体に挿入する。

22. 内部トレイ (C) の奥側の壁がレール (33) に当たらないように下げて挿入する。

23. 内部トレイ (C) の奥側の壁がレール (33) 前面を越えた位置で上に上げ、その後内部トレイ (C) を奥にスライドさせる。

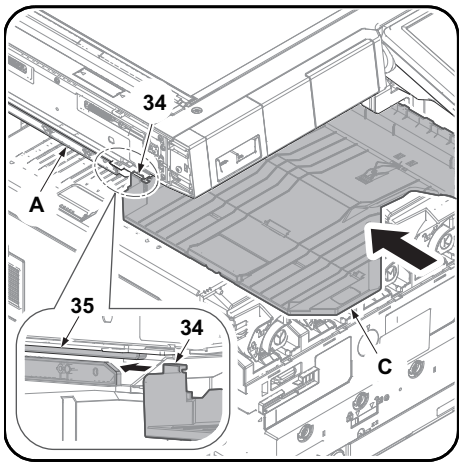

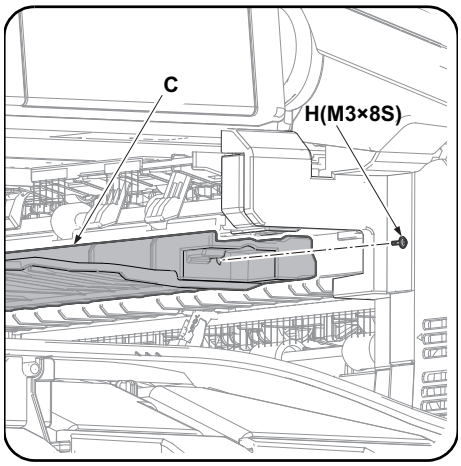

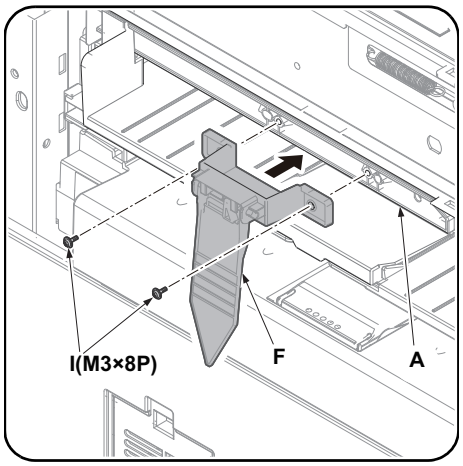

24. Raise the rear left corner of the inner tray (C) and insert the hook (34) into the rail (35) on the scanner bottom cover (A).

25. Firmly slide the inner tray (C) all the way in.

26. Attach the inner tray (C) using the S Tite screw M3 x 8 (H).

27. IInstall the stopper paper (F) onto the scanner bottom cover (A) with the two P Tite screw M3 × 8 (I).

---

24. Soulever le coin arrière gauche du bac intérieur (C) et insérer le crochet (34) dans le rail (35) sur le capot inférieur du scanner (A).

25. Faire coulisser fermement le bac intérieur (C) jusqu'au fond.

26. Attacher le bac intérieur (C) à l'aide de la vis S Tite M3 × 8 (H).

27. Installer la butée de papier (F) sur le capot inférieur du scanner (A) avec les deux vis P Tite M3 × 8 (I).

---

24. Levante la cubierta izquierda posterior de la bandeja interna (C) e inserte el enganche (34) en el raíl (35) en la cubierta inferior (A) del escáner.

25. Deslice firmemente la bandeja interna (C) hasta introducirla hasta el fondo.

26. Fije la bandeja interna (C) con el tornillo S Tite M3 x 8 (H).

27. Instale el tope de papel (F) en la cubierta inferior del escáner (A) con los dos tornillos P Tite M3 x 8 (I).

---

24. Heben Sie die hintere linke Ecke der inneren Ablage (C) an und setzen Sie den Haken (34) in die Schiene (35) an der unteren Abdeckung des Scanners (A) ein.

25. Setzen Sie die innere Ablage (C) vorsichtig komplett ein.

26. Bringen Sie die innere Ablage (C) mit der S-Tite-Schraube M3 x 8 (H) an.

27. Installieren Sie den Papieranschlag (F) an der unteren Abdeckung des Scanners (A) mit 2 P-Tite-Schrauben M3 x 8 (I).

---

24. Sollevare l'angolo sinistro posteriore del vassoio interno (C) e inserire il gancio (34) nella guida (35) sul coperchio inferiore dello scanner (A).

25. Inserire saldamente il vassoio interno (C) fino a fine corsa.

26. Fissare il vassoio interno (C) utilizzando la vite S Tite M3 × 8 (H).

27. Installare il fermo carta (F) sul coperchio inferiore dello scanner (A) con le due viti P Tite M3 × 8 (I).

---

24. 抬起内部接纸盘（C）的左后侧，把挂钩（34）插入扫描仪底部盖板（A）的导轨（35）上。

25. 把内部接纸盘（C）完全插到底。

26. 使用 1 颗紧固型 S 螺丝 M3×8（H）来固定内部接纸盘（C）。

27. 使用 2 颗紧固型 P 螺丝 M3×8（I），把纸张挡板（F）固定到扫描仪底部盖板（A）上。

---

24. 내부 트레이 (C) 의 왼쪽 후면 모서리를 위로 올리고 후크 (34) 를 스캐너 하단 커버 (A) 의 레일 (35) 에 삽입합니다 .5

25. 내부 트레이 (C) 를 안쪽으로 힘껏 밉니다 .

26. 나사 M3×8S 타이트 (H) 를 사용하여 내부 트레이 (C) 를 부착합니다 .

27. 나사 M3×8P 타이트 (I) 두 개를 사용하여 스캐너 하단 커버 (A) 에 스토퍼 용지 (F) 를 장착합니다 .

---

24. 内部トレイ (C) の左後側を持ち上げ、フック (34) をスキャナー底カバー(A) のレール (35) に挿入する。

25. 内部トレイ (C) を奥までしっかり挿入する。

26. 内部トレイ (C) をビス M3×8S タイト (H)1 本で固定する。

27. ペーパーストッパー(F) をスキャナー底カバー(A) にビス M3×8P タイト (I)2 本で固定する。

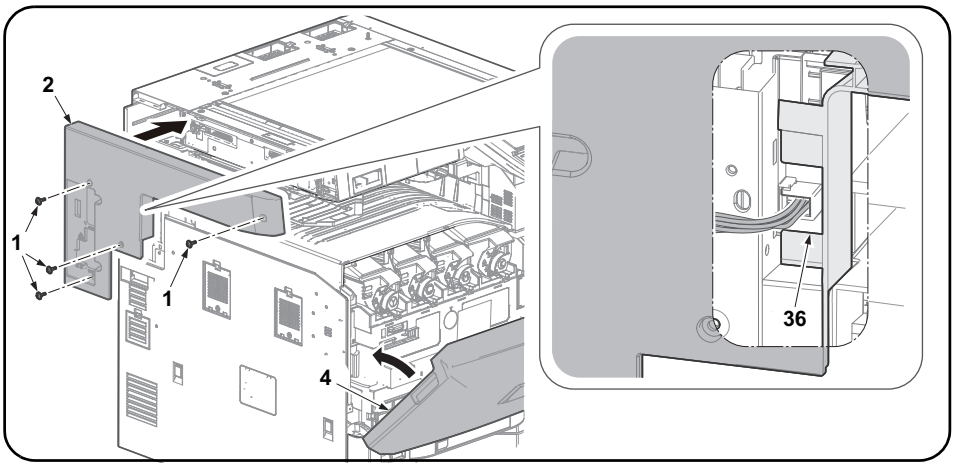

28. Close the front cover (4).
29. Install the left upper cover (2) using the 4 screws (1) removed in step 1.
*Take care to pass the cable through the breakaway part (36) of the left upper cover (2).
NOTICE
The left upper cover (2) will not fit in, if the breakaway cover (3) was not removed in step 2.

---

28. Refermer le capot avant (4).
29. Installez le capot supérieur gauche (2) à l'aide des 4 vis (1) retirées à l'étape 1.
*Veillez à passer le câble à travers la partie détachable (36) du capot supérieur gauche (2).
REMARQUE
Le capot supérieur gauche (2) ne rentre pas si le capot détachable (3) n'a pas été retiré à l'étape 2.

---

28. Cierre la cubierta frontal (4).
29. Instale la cubierta superior izquierda (2) con los 4 tornillos (1) que quitó en el paso 1.
*Tenga cuidado de pasar el cable a través de la pieza de separación (36) de la cubierta superior izquierda (2).
AVISO
La cubierta superior izquierda (2) no entrará si no se ha quitado la cubierta de separación (3) en el paso 2.

---

28. Schließen Sie die vordere Abdeckung (4).
29. Bringen Sie die linke obere Abdeckung (2) wieder an. Benutzen Sie die 4 Schrauben (1) aus Schritt 1.
*Stellen Sie sicher, dass das Kabel durch die Öffnung der Sollbruchstelle (36) der linken oberen Abdeckung (2) geführt wird.
ANMERKUNG
Die linke obere Abdeckung (2) wird nicht passen, wenn die Abdeckung der Sollbruchstelle (3) in Schritt 2 nicht entfernt wurde.

---

28. Chiudere il pannello anteriore (4).
29. Installare il coperchio superiore sinistro (2) utilizzando le 4 viti (1) rimosse al punto 1.
*Prestare attenzione a far passare il cavo attraverso la parte ad aggancio rapido (36) del coperchio superiore sinistro (2).
AVVISO
Se non è stato rimosso il coperchio ad aggancio rapido (3) al punto 2, non sarà possibile montare il coperchio superiore sinistro (2).

---

28. 关闭前盖板（4）。
29. 使用步骤 1 中卸下的 4 颗螺丝（1）安装扫左上盖板（2）。
※ 使电线穿过左上盖板（2）的组合部（36）。
注意
如忘记取下步骤 2 的组合盖板（3），将不能安装左上盖板（2）。

---

28. 전면 커버 (4) 를 닫습니다 .
29. 단계 1 에서 제거한 나사 (1) 4 개를 사용하여 좌측 상 커버 (2) 를 부착합니다 .
※ 케이블이 좌측 상 커버 (2) 의 분리된 부분 (36) 을 통과하도록 합니다 .
주의
단계 2 에서 분리 커버 (3) 를 제거하지 않은 경우 좌측 상 커버 (2) 를 달 수 없습니다 .

---

28. 前カバー(4) 閉める。
29. 手順 1 で外したビス (1)4 本で左上カバー(2) を取り付ける。
※ 左上カバー(2) の割り部 (36) に電線が通っていること。
注意
手順 2 の割りカバー(3) の切り取りを忘れた場合は､左上カバー(2) を取り付ける事ができません。

INSTALLATION GUIDE FOR RIGHT JOB SEPARATOR

JS-731

303NM56710

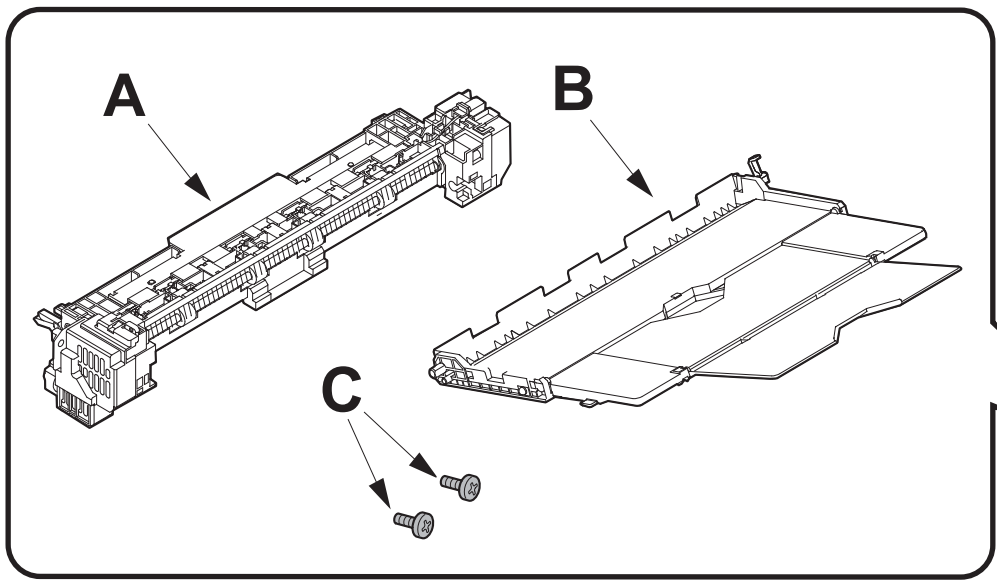

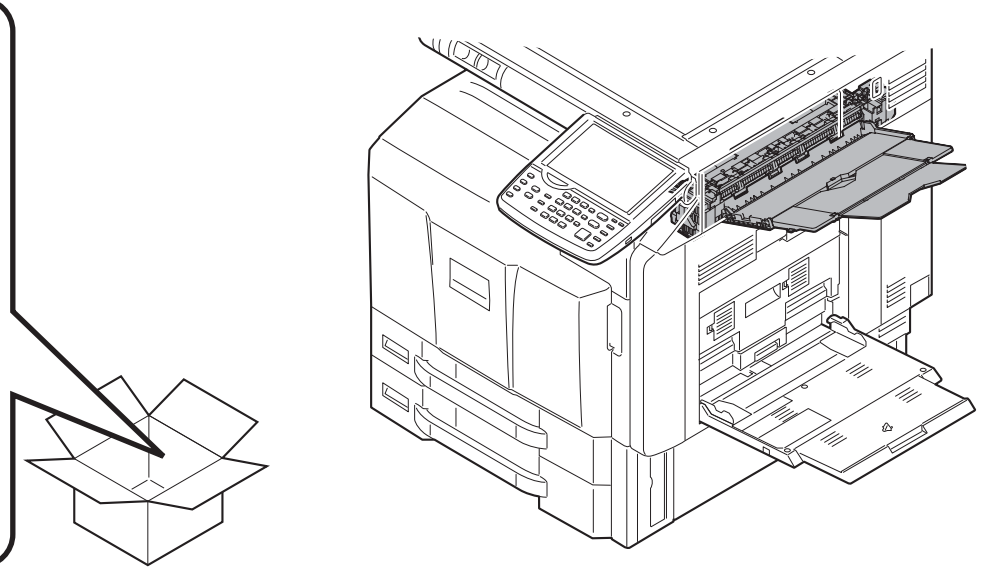

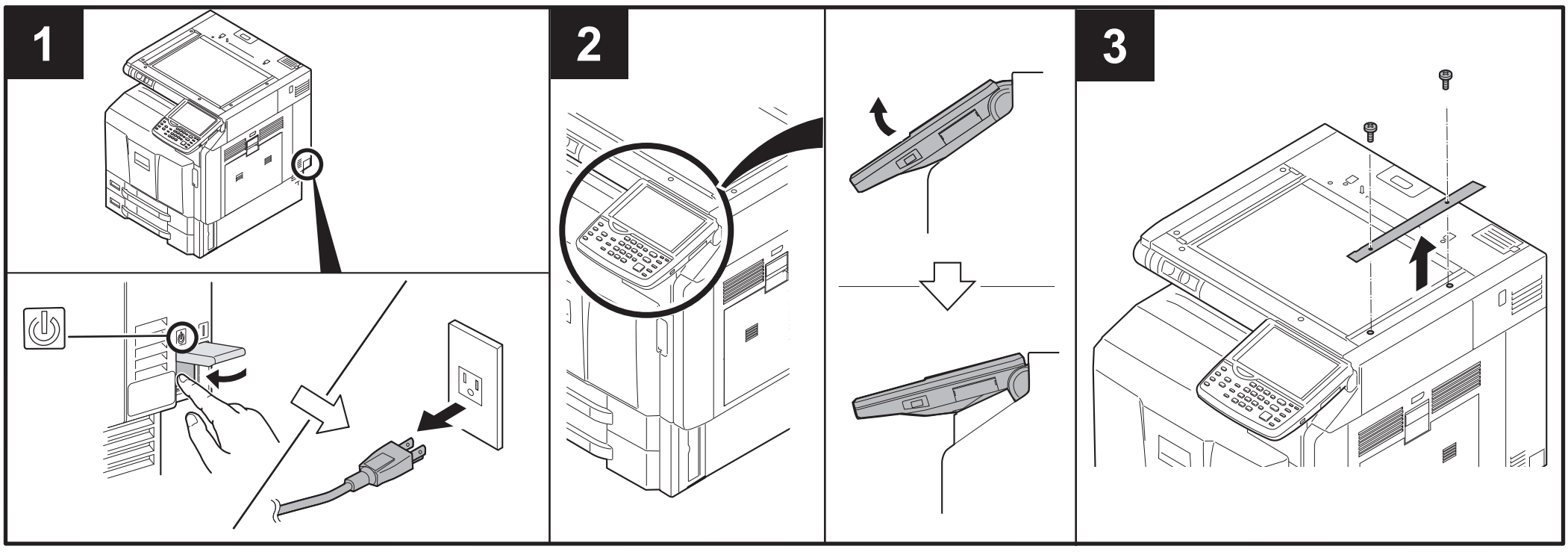

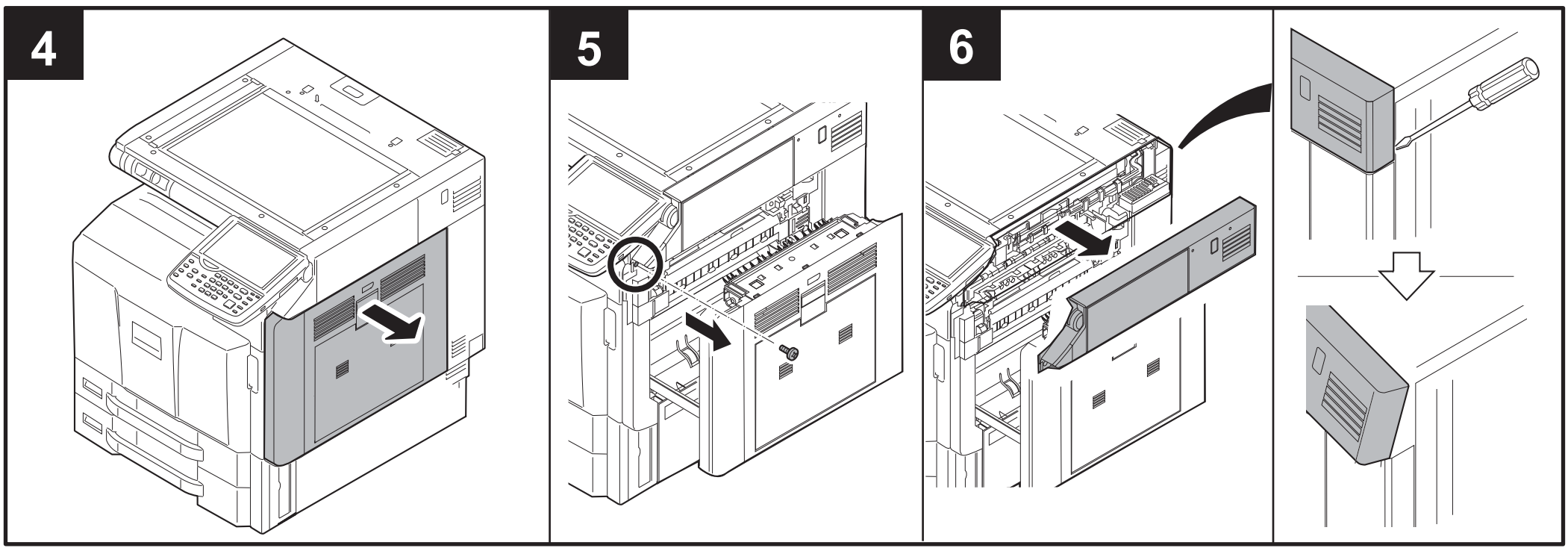

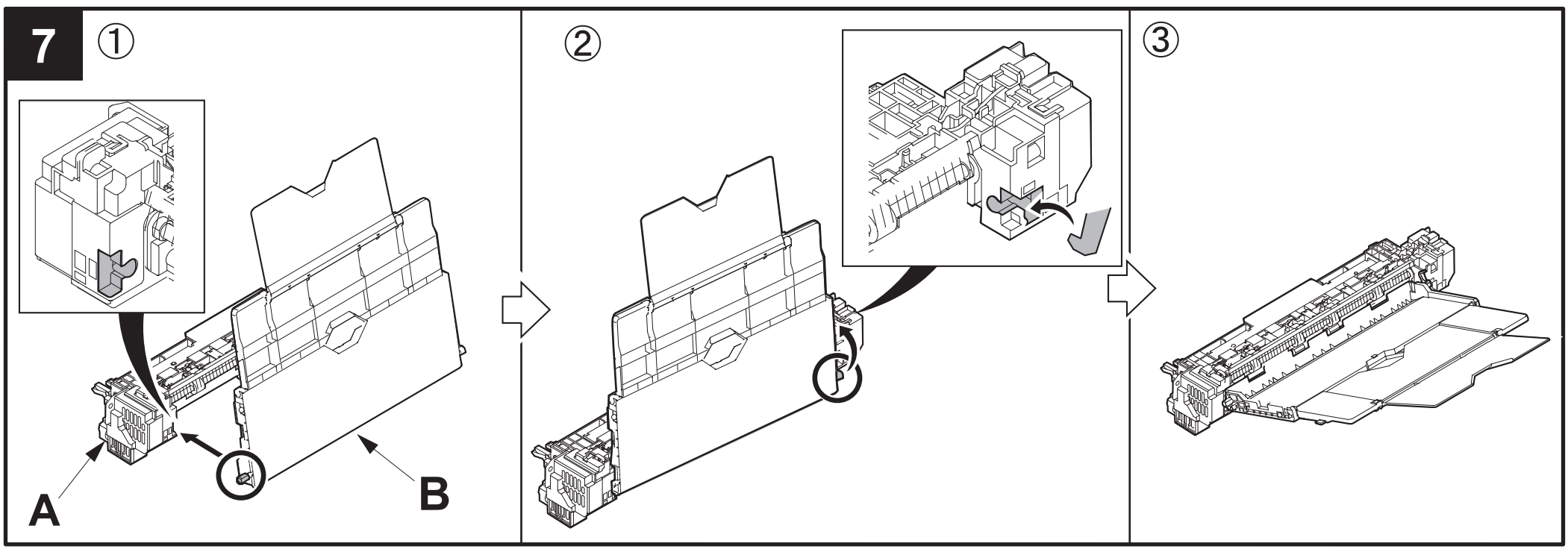

2010.11
303NM56710

8

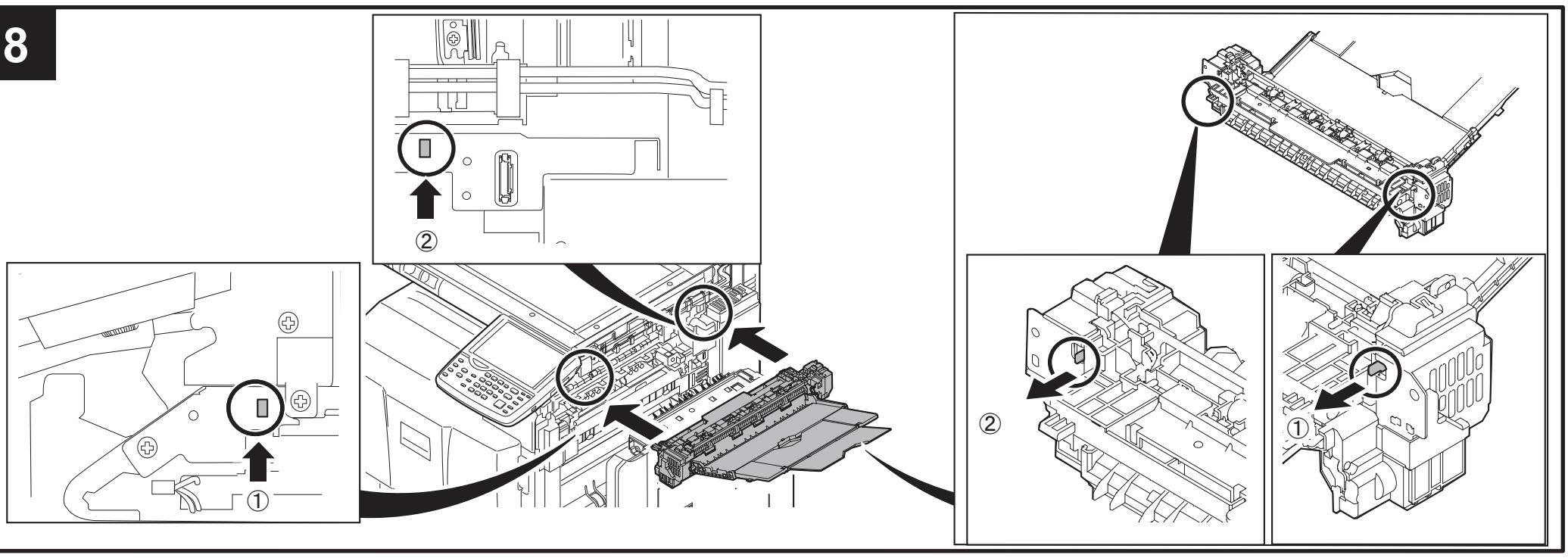

9

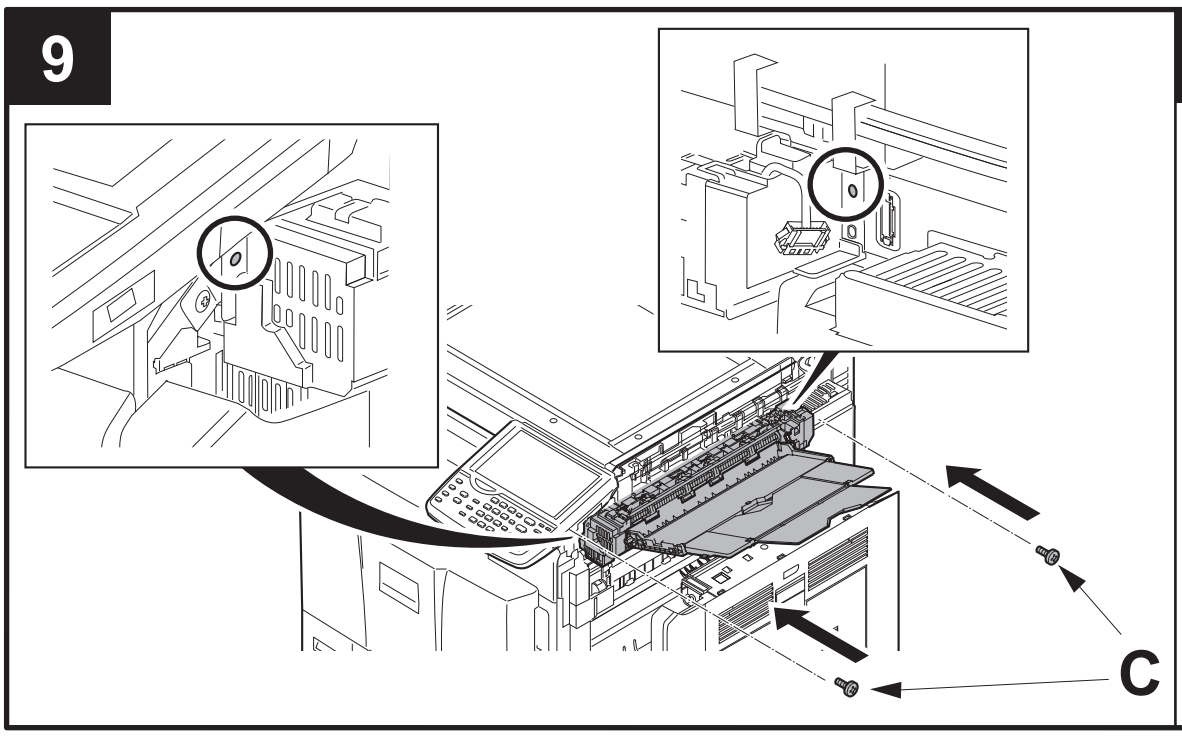

10

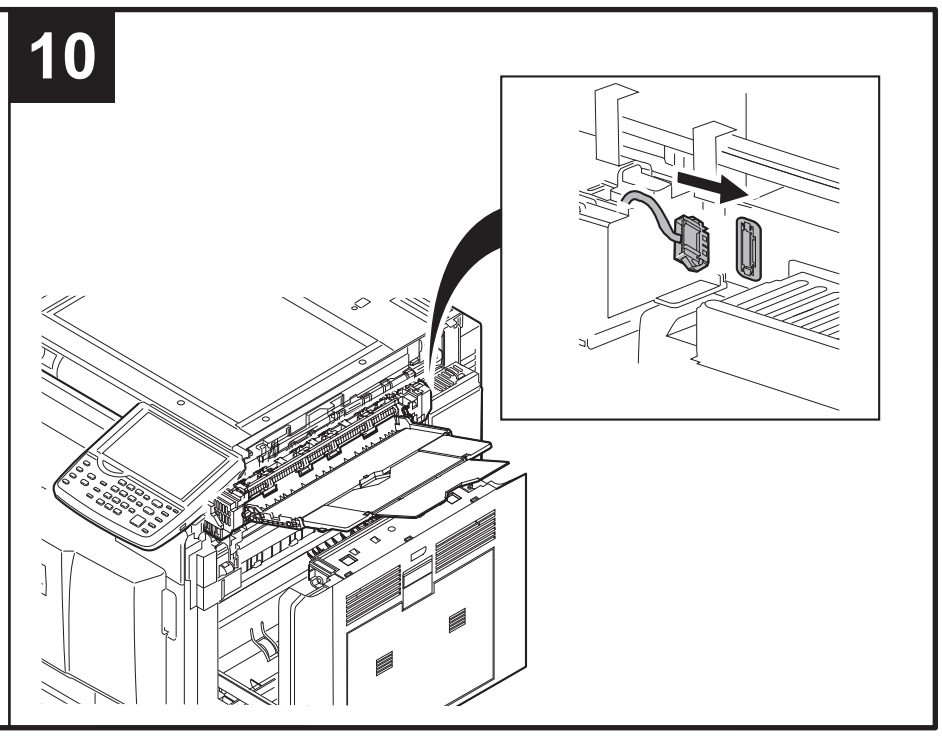

11

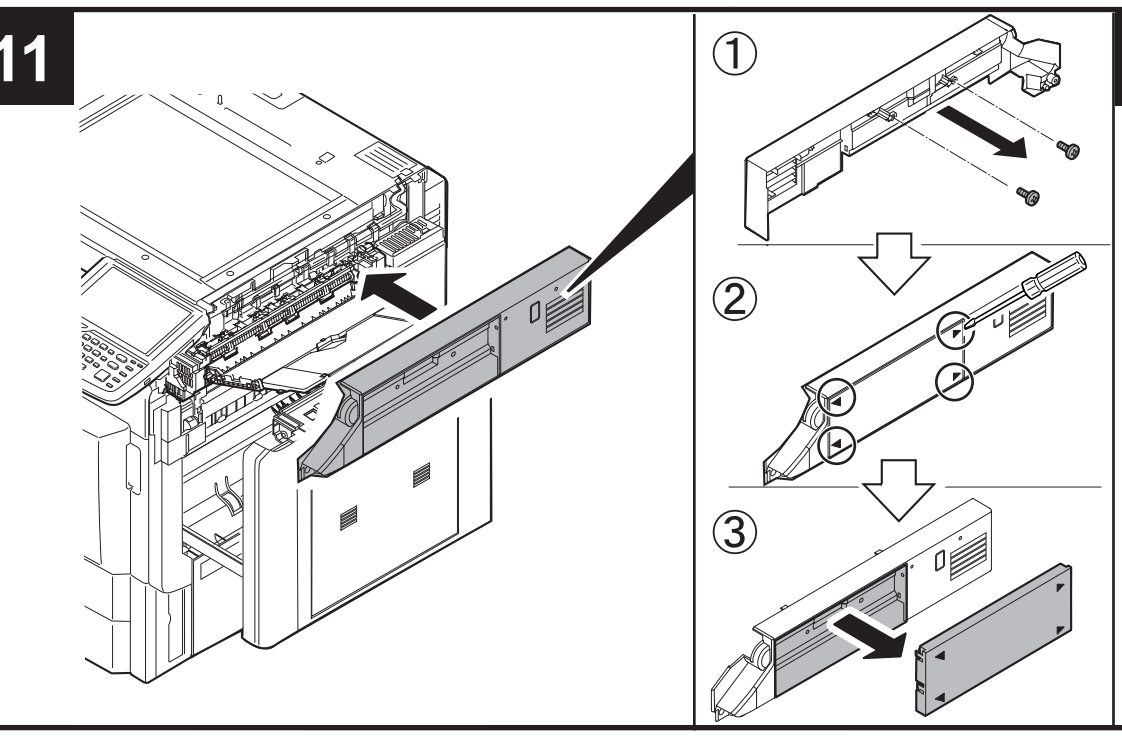

12

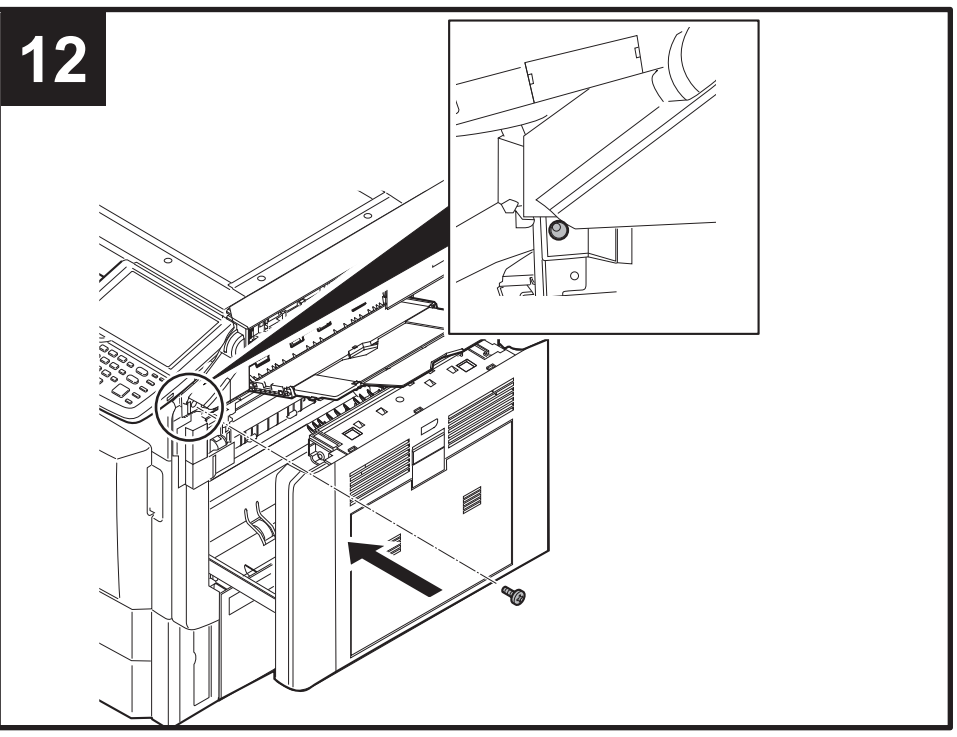

13

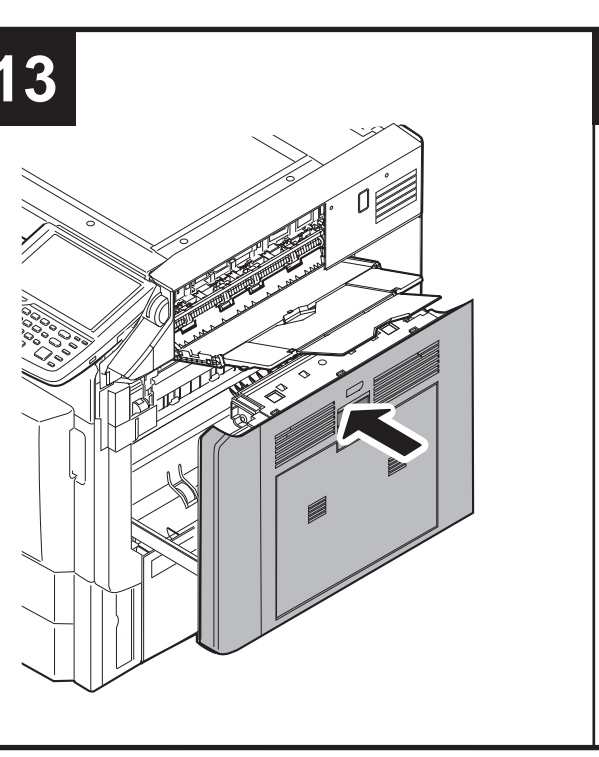

14

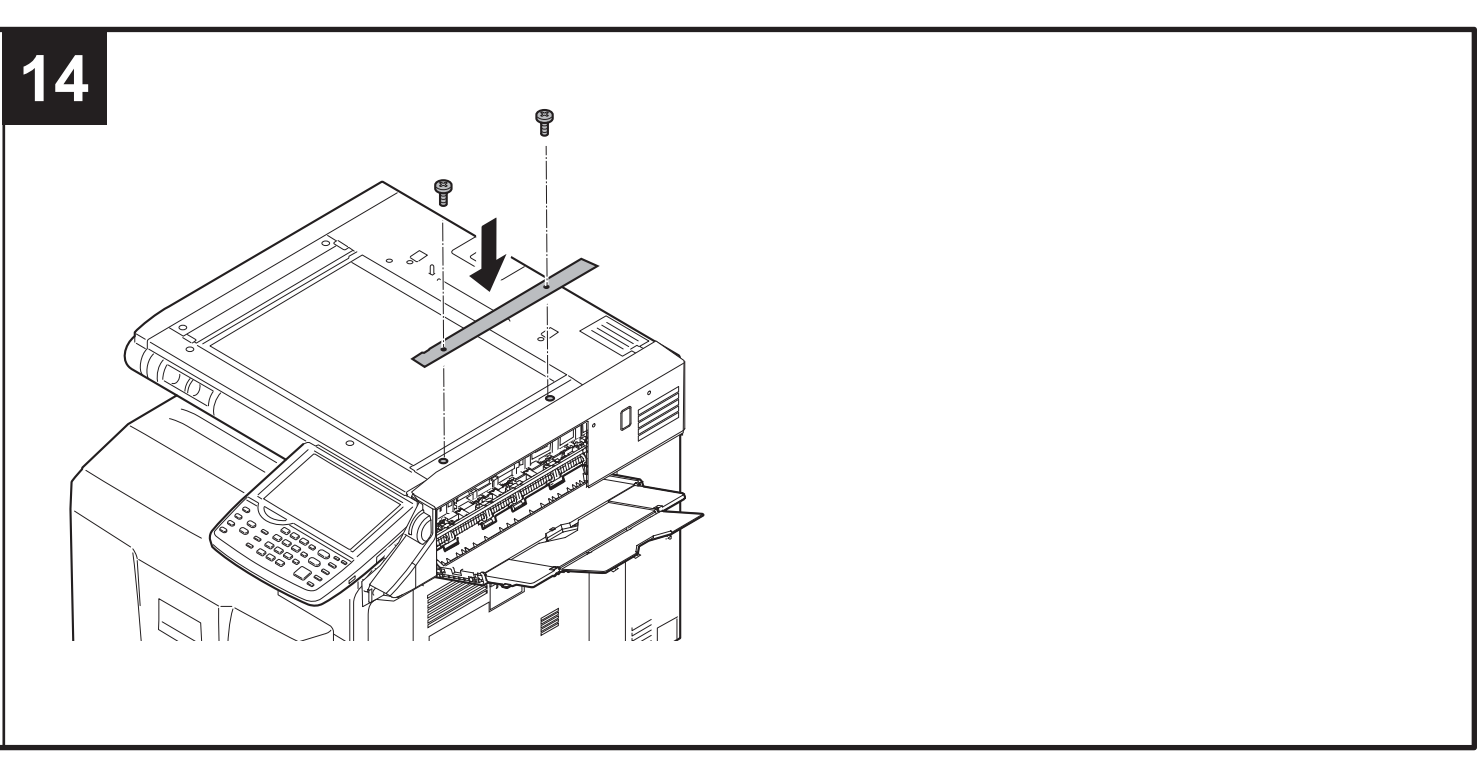

INSTALLATION GUIDE FOR BANNER GUIDE

INSTALLATION GUIDE

GUIDE D'INSTALLATION

GUÍA DE INSTALACION

INSTALLATIONSANLEITUNG

GUIDA ALL'INSTALLAZIONE

安装手册

설치안내서

設置手順書

302K95672001

Banner Guide(A)

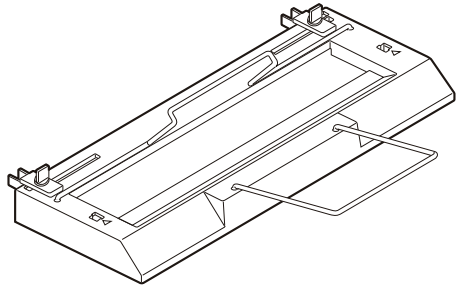

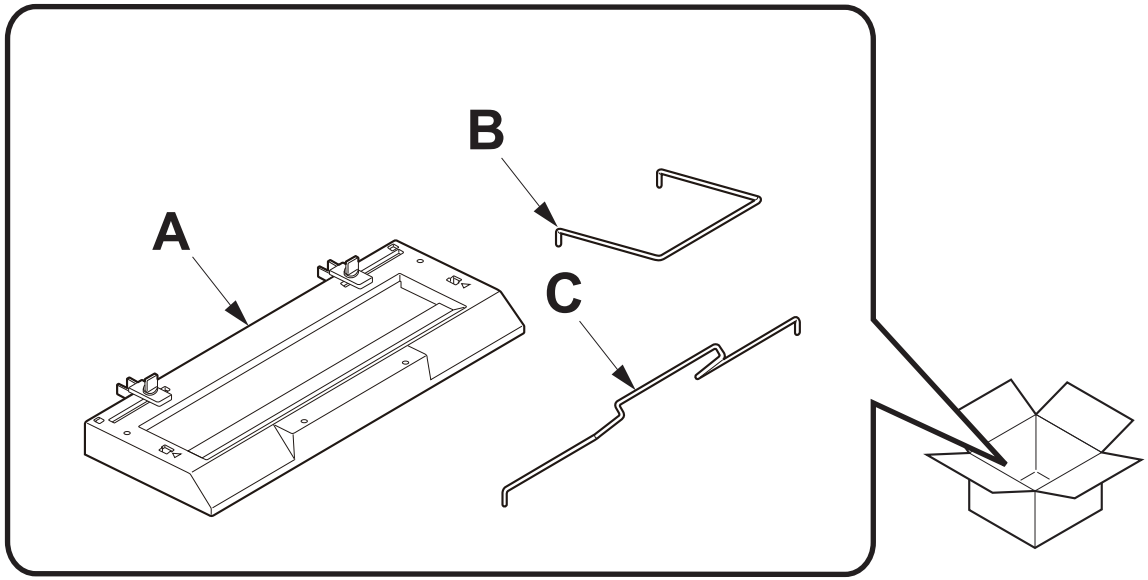

ENG Precautions
The illustrations of the machine in the Installation Guide are for color MFP. (30,35,45,55ppm)

FR Précautions
L'appareil représenté dans les illustrations du présent guide d'installation est le MFP couleur. (30,35,45,55ppm)

ES Precauciones
Las ilustraciones de la máquina que aparecen en la Guía de instalación corresponden a una MFP en color. (30,35,45,55ppm)

DE Vorsichtsmaßnahmen
Die Abbildungen der Maschine in der Installationsanleitung gelten für den Farb-MFP. (30,35,45,55ppm)

IT Precauzioni
Le illustrazioni della macchina nella guida di installazione sono per colore MFP. (30,35,45,55ppm)

CN 注意事项
安装手册中记载的机器主机的插图是彩色机。(30, 35, 45, 55 页机型)

KO 주의사항
설치순서에 기재되어 있는 기기본체 일러스트는 컬러기 입니다 . (30,35,45,55매기)

JP 注意事項
設置手順書に記載している機械本体のイラストはカラー機（30, 35, 45, 55枚機）です。

2011.12
302K956720-01

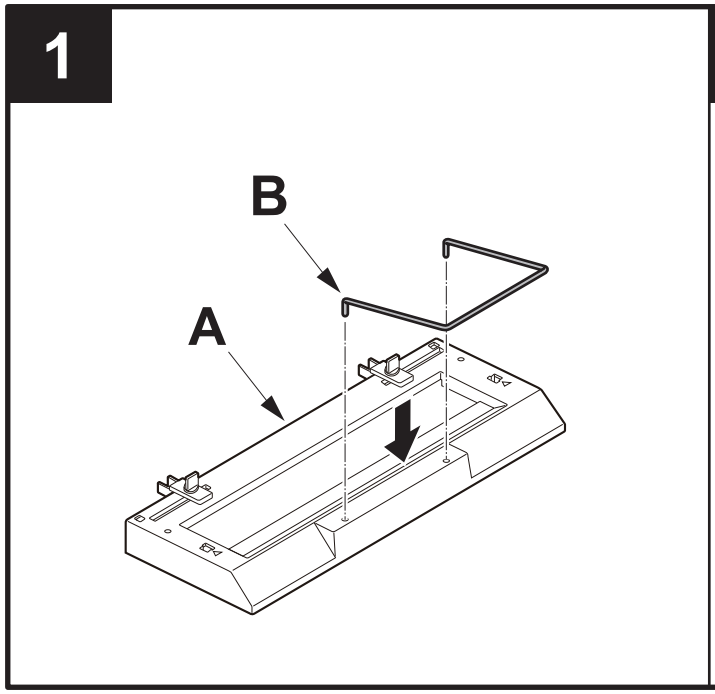

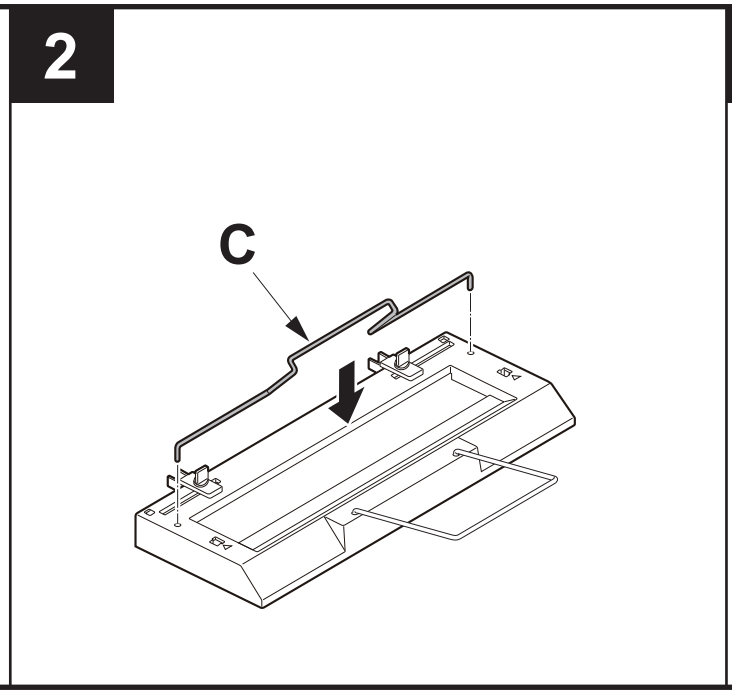

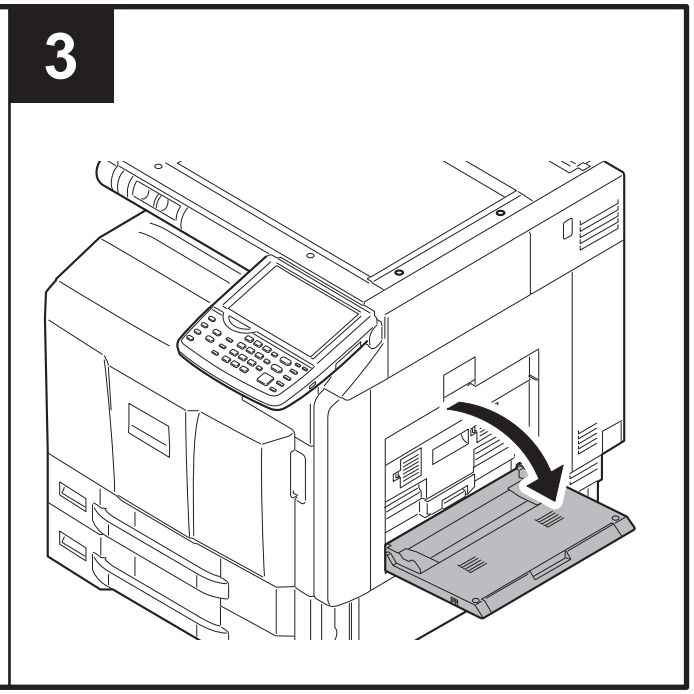

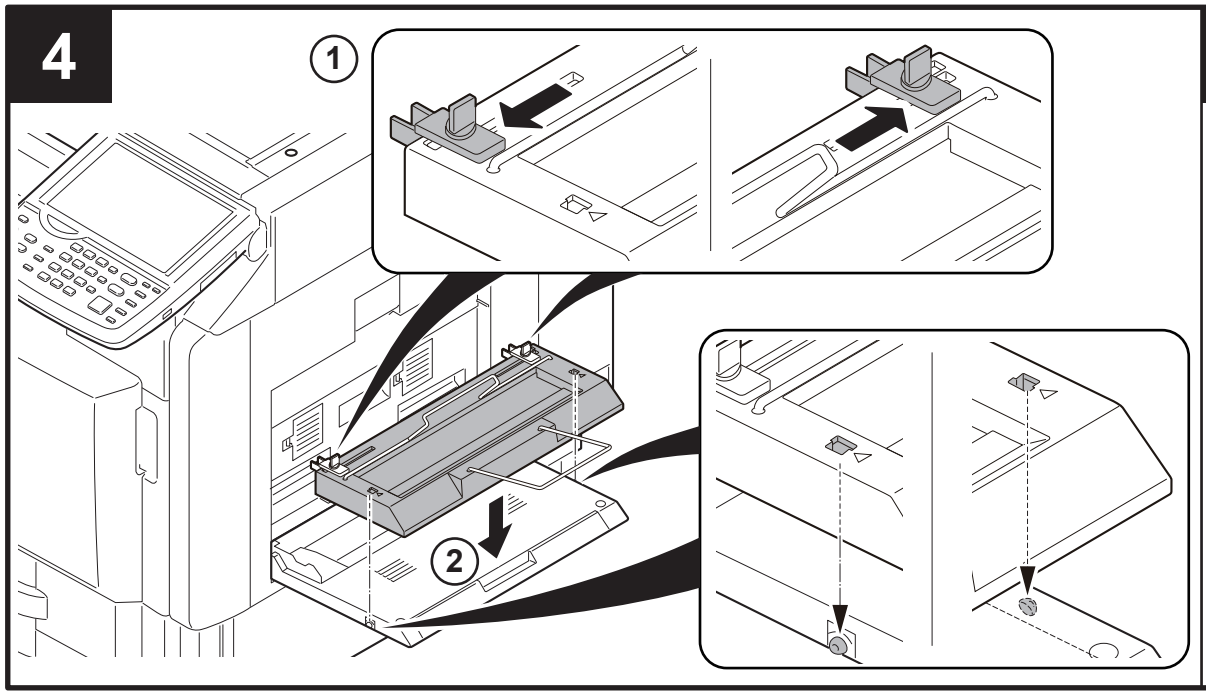

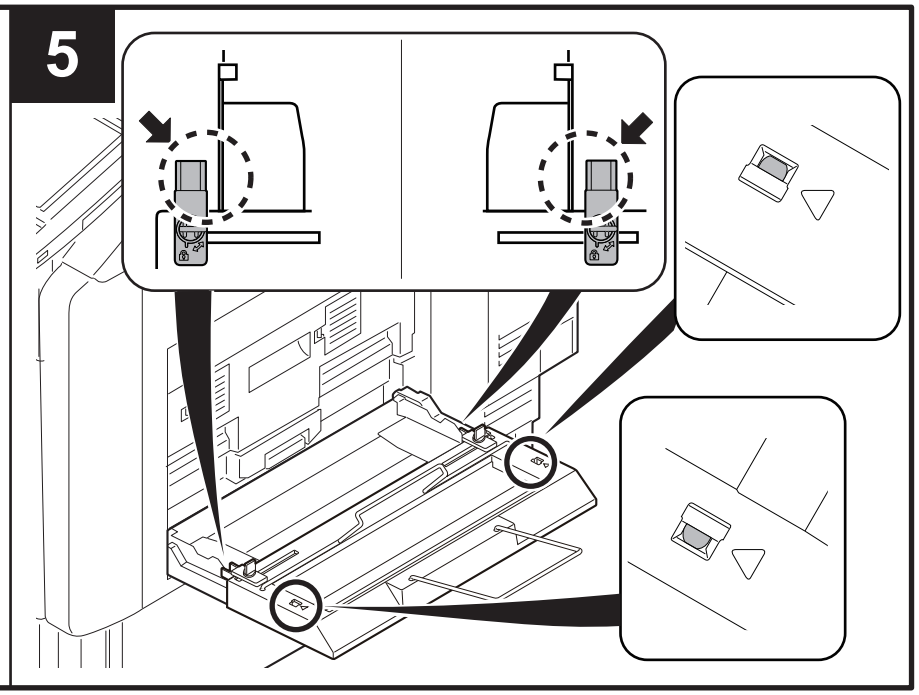

2011.12
302K956720-01

INSTALLATION GUIDE FOR FAX SYSTEM

INSTALLATION GUIDE

GUIDE D’INSTALLATION

GUÍA DE INSTALACION

INSTALLATIONSANLEITUNG

GUIDA ALL’INSTALLAZIONE

安装手册

설치안내서

設置手順書

FAX System(W)

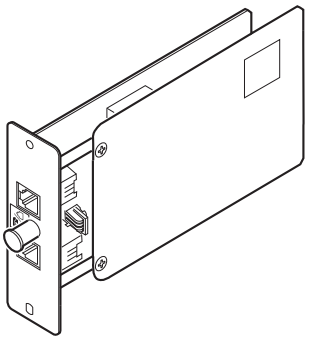

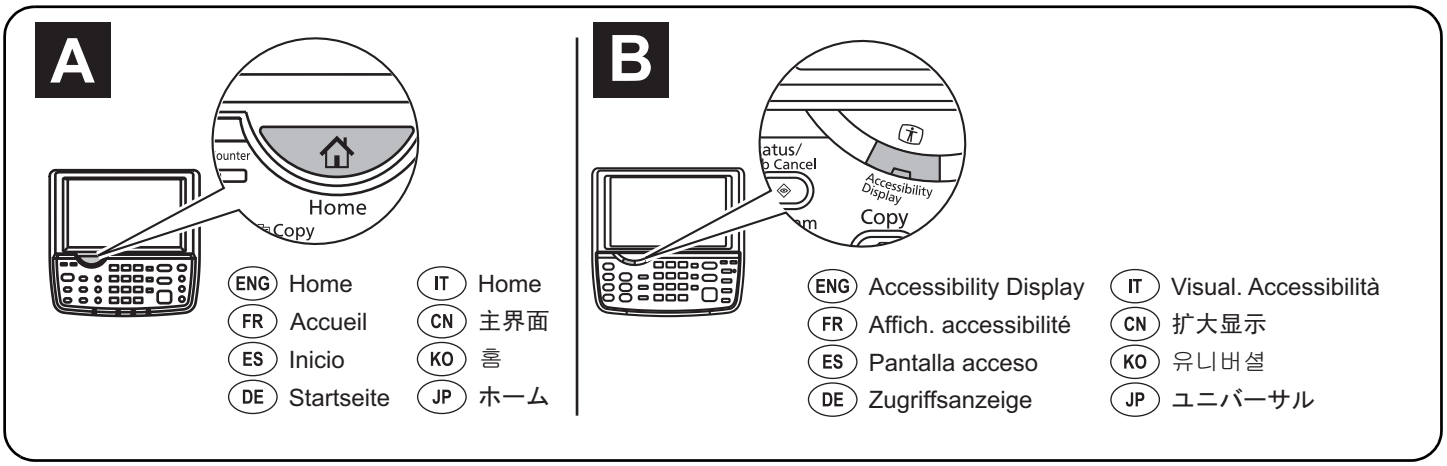

English

A different procedure is required depending on the product which is installed with this unit.Each procedure is described in the following pages.
When installing the Fax system on a machine (A) which has the 'Home' key in the operation panel, see Page 1 to Page 13.
When installing the multiport on a machine (A) which has the 'Home' key in the operation panel, see Page 14 to Page 21.
When installing the Fax system on a machine (B) which has the 'Accessibility Display' key in the operation panel, see Page 22 to Page 34.
When installing the multiport on a machine (B) which has the 'Accessibility Display' key in the operation panel, see Page 35 to Page 41.

Français

Une procédure différente est requise selon le produit qui est installé avec cette unité.Chaque procédure est décrite dans les pages suivantes.
Lors de l'installation du fax sur une machine (A) disposant de la touche 'Accueil' sur le panneau de commande, voir de Page 1 à Page 13.
Lors de l'installation du port multiple sur une machine (A) disposant de la touche 'Accueil' sur le panneau de commande, voir Page 14 à Page 21.
Lors de l'installation du fax sur une machine (B) disposant de la touche 'Affich. accessibilité' sur le panneau de commande, voir de Page 22 à Page 34.
Lors de l'installation du port multiple sur une machine (B) disposant de la touche 'Affich. accessibilité' sur le panneau de commande, voir Page 35 à Page 41.

Español

El procedimiento es diferente según el producto que se instale con esta unidad.En las siguientes páginas, se describe cada procedimiento.
Al instalar el sistema de fax en una máquina (A) que dispone de la tecla 'Inicio' en el panel de controles, consulte las páginas de la 1 a la 13.
Al instalar un puerto múltiple en una máquina (A) que dispone de la tecla 'Inicio' en el panel de controles, consulte las páginas de la 14 a la 21.
Al instalar el sistema de fax en una máquina (B) que dispone de la tecla 'Pantalla acceso' en el panel de controles, consulte las páginas de la 22 a la 34.
Al instalar un puerto múltiple en una máquina (B) que dispone de la tecla 'Pantalla acceso' en el panel de controles, consulte las páginas de la 35 a la 41.

Deutsch

Je nach verwendetem Modell ist eine andere Vorgehensweise zur Installation dieses Teils erforderlich.Die unterschiedlichen Vorgehensweisen werden auf den folgenden Seiten erläutert.
Bei Installation des FAX-Systems in einem Gerät (A), das über die Taste 'Startseite' im Bedienfeld verfügt, siehe Seite 1 bis 13.
Bei Installation einer zweiten Leitung in einem Gerät (A), das über die Taste 'Startseite' im Bedienfeld verfügt, siehe Seite 14 bis 21.
Bei Installation des FAX-Systems in einem Gerät (B), das über die Taste 'Zugriffsanzeige' im Bedienfeld verfügt, siehe Seite 22 bis 34.
Bei Installation einer zweiten Leitung in einem Gerät (B), das über die Taste 'Zugriffsanzeige' im Bedienfeld verfügt, siehe Seite 35 bis 41.

Italiano

Si richiede una procedura diversa in funzione del prodotto su cui è installata l'unità.Le singole procedure sono descritte nelle pagine seguenti.
Per l'installazione del modulo FAX su una macchina (A) dotata di tasto 'Home' sul pannello comandi, vedere le istruzioni da Pagina 1 a Pagina 13.
Per l'installazione di una porta multipla su una macchina (A) dotata di tasto 'Home' sul pannello comandi, vedere le istruzioni da Pagina 14 a Pagina 21.
Per l'installazione del modulo FAX su una macchina (B) dotata di tasto 'Visual. Accessibilità' sul pannello comandi, vedere le istruzioni da Pagina 22 a Pagina 34.
Per l'installazione di una porta multipla su una macchina (B) dotata di tasto 'Visual. Accessibilità' sul pannello comandi, vedere le istruzioni da Pagina 35 a Pagina 41.

简体中文

根据安装对象，安装步骤略有不同。各个步骤记载在下面的页面。
当安装传真系统到那些操作面板上有 ' 主界面 ' 按键的机器 (A) 时，请参见 P1-P13。
当安装双路传真系统到那些操作面板上有 ' 主界面 ' 按键的机器 (A) 时，请参见 P14-P21。
当安装传真系统到那些操作面板上有 ' 扩大显示 ' 按键的机器 (B) 时，请参见 P22-P34。
当安装双路传真系统到那些操作面板上有 ' 扩大显示 ' 按键的机器 (B) 时，请参见 P35-P41。

한국어

이 장치를 설치하는 제품에 따라 절차가 다릅니다 . 다음 페이지에서 각 절차를 설명합니다 .
조작판넬에 ' 홈 ' 키가 있는 본체 (A) 에 팩스 시스템을 설치하는 경우 1 페이지 ~ 13 페이지를 참조하십시오 .
조작판넬에 ' 홈 ' 키가 있는 본체 (A) 에 멀티 포트를 설치하는 경우 14 페이지 ~ 21 페이지를 참조하십시오 .
조작판넬에 ' 유니버셜 ' 키가 있는 본체 (B) 에 팩스 시스템을 설치하는 경우 22 페이지 ~ 34 페이지를 참조하십시오 .
조작판넬에 ' 유니버셜 ' 키가 있는 본체 (B) 에 멀티 포트를 설치하는 경우 35 페이지 ~ 41 페이지를 참조하십시오 .

日本語

装着する対象によって、取付手順は異なります。それぞれ、以下のページに記載しています。
操作パネルに ‘ ホーム ’ キーがある機械 (A) にファクスシステムを設置する場合;1 ページ～ 13 ページ
操作パネルに ‘ ホーム ’ キーがある機械 (A) にマルチポートを設置する場合;14 ページ～ 21 ページ
操作パネルに ‘ ユニバーサル ’ キーがある機械 (B) にファクスシステムを設置する場合;22 ページ～ 34 ページ
操作パネルに ‘ ユニバーサル ’ キーがある機械 (B) にマルチポートを設置する場合;35 ページ～ 41 ページ

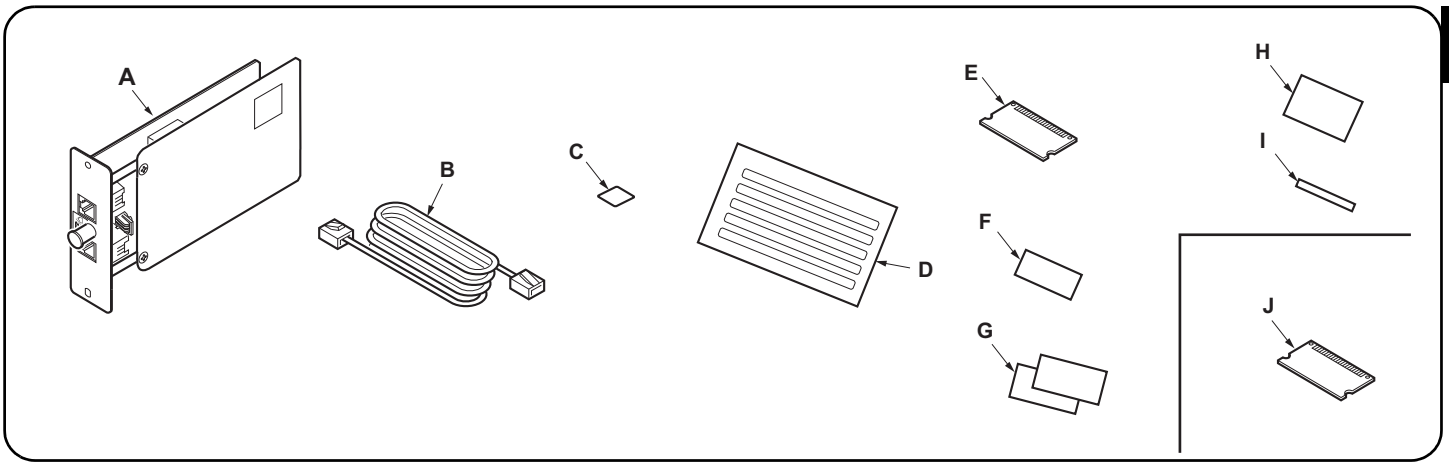

When installing the Fax system on a machine (A) which has the 'Home' key in the operation panel

Supplied parts

A. FAX circuit board 1
B. Modular connector cable (120 V/Australian model only) PJJWC0016Z (UL Listed.HUAN HSIN Type TL:120 V only) 1
C. Terminal seal..... 1
D. Alphabet label..... 1
E. Memory DIMM (16 MB) 1
F. PTT label (110V model only) 1
G. Approval label (Australian/New Zealand models only)..... 2

Option

J. Memory DIMM (128 MB) 1

(H) and (I) are not supplied.

Be sure to remove any tape and/or cushioning materials from the parts supplied.

Lors de l'installation du fax sur une machine (A) disposant de la touche 'Accueil' sur le panneau de commande

Pièces fournies

A. Carte à circuits FAX..... 1
B. Câble du connecteur modulaire (modèles pour l'Australie/120 V seulement)..... 1
C. Joint de borne..... 1
D. Etiquette de l'alphabet..... 1
E. Mémoire DIMM (16 MB) 1

Option

J. Mémoire DIMM (128 MB) 1

(F),(G),(H) et (I) ne sont pas fournis.

Veillez à retirer les morceaux de bande adhésive et/ou les matériaux de rembourrage des pièces fournies.

Al instalar el sistema de fax en una máquina (A) que dispone de la tecla 'Inicio' en el panel de controles

Partes suministradas

A. Tarjeta de circuitos de fax..... 1
B. Cable conector modular (sólo para modelos de 120 V/Australianos)..... 1
C. Sello del terminal..... 1
D. Etiqueta de alfabeto..... 1
E. Memoria DIMM (16 MB) 1

Opción

J. Memoria DIMM (128 MB) 1

(F) ,(G) ,(H) y (I) no se suministran.

Asegúrese de quitar todas las cintas y/o material amortiguador de las partes suministradas.

Bei Installation des FAX-Systems in einem Gerät (A), das über die Taste 'Startseite' im Bedienfeld verfügt

Enthaltene Teile

A. FAX-Leiterplatte..... 1
C. Verschlusskappe 1
D. Alphabetaufkleber..... 1
E. Speicher-DIMM (16 MB) 1

Option

J. Speicher-DIMM (128 MB) 1

(B), (F), (G) , (H) und (I) liegen nicht bei.

Stellen Sie sicher, dass sämtliche Klebebänder und/oder Polstermaterial von den gelieferten Teilen entfernt wurden.

Per l'installazione del modulo FAX su una macchina (A) dotata di tasto 'Home' sul pannello comandi

Parti fornite

A. Scheda a circuiti FAX 1
C. Guarnizione terminale 1
D. Etichetta alfabetica 1
E. Memoria DIMM (16 MB) 1

Opzioni

J. Memoria DIMM (128 MB) 1

(B),(F), (G), (H) e (I) non sono in dotazione.

Rimuovere tutti i nastri adesivi e/o i materiali di protezione dalle parti fornite.

当安装传真系统到那些操作面板上有 ' 主界面 ' 按键的机器 (A) 时

附属品

A. 传真电路板..... 1
B. 电话线..... 1
C. 端子密封..... 1
D. 英文字母标签..... 1
E. 内存模组 DIMM (16MB) 1
F. 规格标签 1
H. 贴片 1
I. 名称标签 1

选购件

J. 内存模组 DIMM (128MB) 1

(G) 并非附属品。

如果附属品上带有固定胶带，缓冲材料时务必揭下。

조작판넬에 ' 홈 ' 키가 있는 본체 (A) 에 팩스 시스템을 설치하는 경우

동봉품

A. FAX 기판 1
C. 단자씰.....1
D. 알파벳 라벨.....1
E. 메모리 DIMM (16MB) 1

옵션

J. 메모리 DIMM (128MB) 1

(B) , (F) ,(G), (H) ,(I) 는 동봉되어 있지 않습니다 .

동봉품에 고정 테이프 , 완충재가 붙어 있는 경우에는 반드시 제거하십시오 .

操作パネルに ‘ ホーム ’ キーがある機械 (A) にファクスシステムを設置する場合

同梱品

A. FAX 基板 1
B. モジュラーコード..... 1
C. 端子シール..... 1
E. メモリーDIMM(16MB)..... 1

オプション

J. メモリーDIMM(128MB) 1

(D),(F),(G),(H),(I) は、同梱されていない。

同梱品に固定テープ、緩衝材が付いている場合は必ず取り外すこと。

NOTICE

References to medium-speed MFPs in this document denote 25/25, 30/30, 35/35, 45/45 and 55/50 ppm color machines, and 30, 35, 45 and 55 ppm monochrome machines.
References to high-speed MFPs in this document denote 65/65 and 75/70 ppm color machines, and 65 and 80 ppm monochrome machines.
(The generic procedure figures in this document show medium-speed MFPs.)
If the finisher is already installed, remove the finisher before installing FAX System(W).
Before starting installation, be sure to turn the main power switch of the machine off, and unplug the power plug from the wall outlet.

REMARQUE

Dans le présent document, les références aux MFP à vitesse moyenne renvoient aux machines couleurs 25/25, 30/30, 35/35, 45/45 et 55/50 ppm et aux machines monochromes 30, 35, 45 et 55 ppm.
Dans le présent document, les références aux MFP à grande vitesse renvoient aux machines couleurs 65/65 et 75/70 ppm et aux machines monochromes 65 et 80 ppm. (Dans ce document, les chiffres des processus génériques renvoient aux MPF à vitesse moyenne.)
Si le retoucheur est déjà en place, le déposer avant de monter le FAX System(W).
Avant de commencer l'installation, s'assurer de mettre la machine hors tension et de débrancher la fiche d'alimentation de la prise murale.

AVISO

Las referencias a las MFP de velocidad media de este documento corresponden a las máquinas a color de 25/25, 30/30, 35/35, 45/45 y 55/50 ppm y a las máquinas monocromáticas de 30, 35, 45 y 55 ppm.
Las referencias a las MFP de alta velocidad de este documento corresponden a las máquinas a color de 65/65 y 75/70 ppm y a las máquinas monocromáticas de 65 y 80 ppm.
(Las ilustraciones de procedimientos genéricos de este documento muestran las MFP de velocidad media.)
Si el finalizador ya se encuentra instalado, desmóntelo antes de instalar el FAX System(W).
Antes de iniciar la instalación, asegúrese de apagar el interruptor de encendido de la máquina y desenchufar el cable de alimentación de la toma de pared.

ANMERKUNG

Angaben für MFP der mittleren Leistungsklasse in dieser Anleitung gelten für die 25/25, 30/30, 35/35, 45/45 und 55/50 ppm Vollfarbenkopierer sowie für die 30, 35, 45 und 55 ppm Monochrommaschinen.
Angaben für MFP der Hochleistungsklasse in dieser Anleitung gelten für die 65/65 und 75/70 ppm Vollfarbenkopierer sowie für die 65 und 80 ppm Monochrommaschinen. (Die Abbildungen der allgemeinen Prozeduren zeigen MFP der mittleren Leistungsklasse.)
Falls der Finisher schon installiert ist, müssen Sie ihn ausbauen, bevor Sie das FAX System(W) installieren.
Bevor Sie mit der Installation beginnen überzeugen Sie sich, dass der Netzschalter des Geräts ausgeschaltet und das Stromkabel aus der Steckdose gezogen ist.

AVVISO

I riferimenti per le MFP a velocità media riportati in questo documento indicano le macchine a colori 25/25, 30/30, 35/35, 45/45 e 55/50 ppm, e le macchine monocromatiche 30, 35, 45 e 55 ppm.
I riferimenti per le MFP a velocità alta riportati in questo documento indicano le macchine a colori 65/65 e 75/70 ppm, e le macchine monocromatiche 65 e 80 ppm. (Le figure della procedura generica riportate in questo documento mostrano le MFP a velocitò media.)
Se la finitrice è già installata, rimuovere la finitrice prima di installare il FAX System(W).
Prima di iniziare l'installazione, spegnere la macchina e scollegare la spina dalla presa di corrente.

注意

本文中的中速 MFP 代表彩色 25/25 页机型、30/30 页机型、35/35 页机型、45/45 页机型、55/50 页机型、黑白 30 页机型、35 页机型、45 页机型、55 页机型。
本文中的高速 MFP 代表彩色 65/65 页机型、75/70 页机型、黑白 65 页机型、80 页机型。（本文中的通用步骤的插图为中速 MFP。）
已安装装订器时，必须先拆下装订器再安装 FAX System(W)。
安装前务必关闭机器的主电源开关，并从墙壁插座拔下电源插头。

주의

본문 중 중속 MFP 는 컬러 25/25, 30/30, 35/35, 45/45, 55/50 ppm 기종 , 흑백 30, 35, 45, 55 ppm 기종을 나타냅니다 .
본문 내 고속 MFP 는 컬러 65/65, 75/70 ppm 기종 , 흑백 65, 80 ppm 기종을 나타냅니다 . (본문에있는 일반적인 순서 일러스트는 중속 MFP 가 보여집니다 .)
피니셔가 이미 장착되어 있는 경우에는 피니셔를 제거하고 FAX System(W) 를 설치할 것 .
설치 시작하기 전에 반드시 본체의 주 전원 스위치를 끄고 벽 콘센트에서 전원 플러그를 분리하십시오 .

注意

本文中の中速 MFP はカラー機の 25/25 枚機、30/30 枚機、35/35 枚機、45/45 枚機、55/50 枚機、モノクロ機の 30 枚機、35 枚機、45 枚機、55 枚機を表す。
本文中の高速 MFP はカラー機の 65/65 枚機、75/70 枚機、モノクロ機の 65 枚機、80 枚機を表す。(本文中の共通手順イラストは中速 MFP とする。)
フィニッシャーがすでに装着されている場合は、フィニッシャーを取り外してから、FAX System(W) を取り付けること。
必ず機械本体の主電源スイッチを OFF にし、機械本体の電源プラグを抜いてから作業すること。

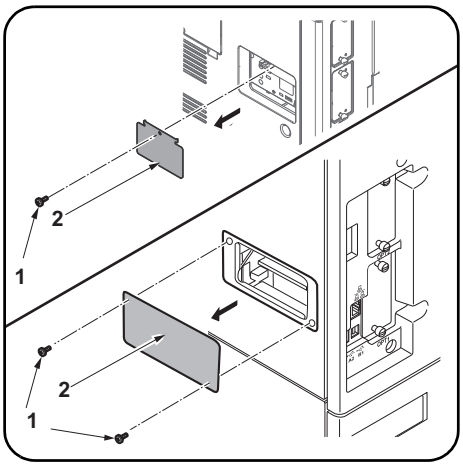

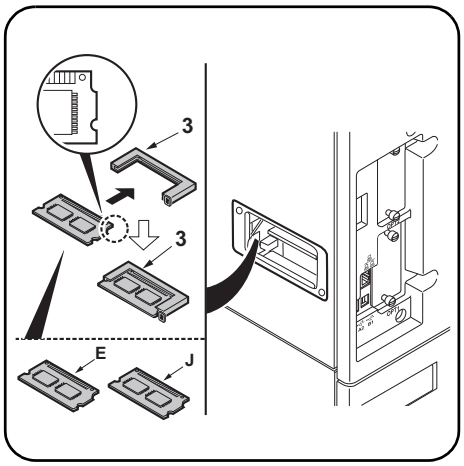

Procedure
Installing the memory DIMM

1. Remove 1 or 2 screws (1), and then remove the cover (2).
2. Install the memory DIMM (E) or the optional memory DIMM (J) into the memory slot (3).
   Install it with the IC side facing up.
   Insert it in the direction of the arrow until it clicks.
3. Reinstall the cover (2) using the 1 or 2 screws (1).

Procédure
Installation de la mémoire DIMM

1. Déposer 1 ou 2 vis (1), puis retirez le couvercle (2).
2. Installer la mémoire DIMM (E) ou la mémoire DIMM en option (J) dans la fente mémoire (3).
   L'installer avec le côté IC vers le haut.
   L'insérer dans la direction de la flèche jusqu'au clic.
3. Reposez le couvercle (2) en position à l'aide de 1 ou 2 vis (1).

Procedimiento
Instalación de la memoria DIMM

1. Quite 1 o 2 tornillos (1) y después retire la cubierta (2).
2. Instale la memoria DIMM (E) o la memoria DIMM opcional (J) en la ranura para memoria (3).
   Instálela con la cara IC hacia arriba.
   Insértela en la dirección que indica la flecha hasta que escuche un clic.
3. Vuelva a colocar la cubierta (2) con 1 o 2 tornillos (1).

Vorgehensweise
Installation der DIMM-Speichermodule

1. Entfernen Sie 1 oder 2 Schrauben (1) und entfernen dann die Abdeckung (2).
2. Setzen Sie den DIMM-Speicher (E) oder den optionalen DIMM-Speicher (J) in der Speichersteckplatz (3).
   Installieren Sie die Platine mit den Speicherbausteinen nach oben.
   Schieben Sie das Modul in Pfeilrichtung, bis es hörbar einrastet.
3. Setzen Sie die Abdeckung (2) mit 1 oder 2 Schrauben (1) wieder ein.

Procedura
Installazione della memoria DIMM

1. Rimuovere 1 o 2 viti (1) per rimuovere il coperchio (2).
2. Installare la memoria DIMM (E) oppure la memoria opzionale DIMM (J) nello slot memoria (3).
   Installarla con il lato IC rivolto verso l'alto.
   Inserirla nella direzione della freccia finché non scatta in posizione.
3. Reinstallare il coperchio (2) utilizzando 1 o 2 viti (1).

安装步骤
安装内存模组 DIMM

1. 取下 1 颗或 2 颗螺丝（1），然后取下盖板（2）。
2. 将内存模块 (E) 或选购件内存模块（J）安装到内存插槽（3）。
   将 IC 侧正面向上来安装。
   沿箭头方向将其插入到底直至发出喀嗒声。
3. 使用 1 颗或 2 颗螺丝（1）重新安装盖板（2）。

설치순서
메모리 DIMM 설치

1. 나사 (1) 1 또는 2 개를 제거하고 커버 (2) 를 제거합니다 .
2. 메모리 DIMM(E) 또는 옵션 메모리 DIMM(J) 을 메모리 슬롯 (3) 에 장착합니다 .
   IC 면을 위로 향하게 하여 설치합니다 .
   딸칵하고 소리가 날 때까지 화살표 방향으로 삽입합니다 .
3. 나사 (1) 1 또는 2 개로 커버 (2) 를 원래대로 장착합니다 .

取付手順
メモリーDIMM の取り付け

1. ビス (1)1 本または 2 本を外し、カバー(2) を取り外す。
2. メモリーDIMM(E)または、オプションのメモリーDIMM(J) をメモリースロット (3) に取り付ける。
   IC 面を上向きに取り付けること。
   カチッと音がするまで矢印方向に挿入する。
3. ビス (1)1 本または 2 本で、カバー(2) を元通り取り付ける。

A

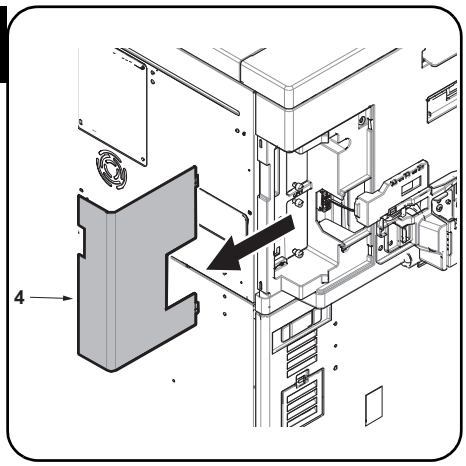

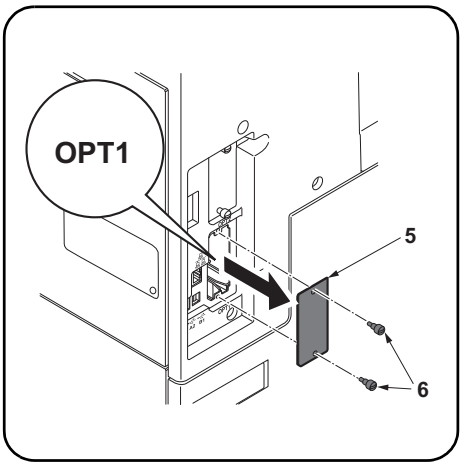

Removing the slot cover

4. Remove the cover (4).
* For high-speed MFPs with/without the finisher and for medium-speed MFPs with the finisher installed.

5. Remove 2 screws (6) and then remove the OPT1 slot cover (5).
* Do not use OPT2.

Dépose du couvercle de la fente

4. Déposer le couvercle (4).
* Pour les imprimantes multifonction à grande vitesse avec/sans module de finition et pour les imprimantes multifonction à vitesse moyenne avec le module de finition installé.

5. Déposer les 2 vis (6) puis le couvercle de la fente OPT1 (5).
* Ne pas utiliser OPT2.

Desmontaje de la cubierta de la ranura

4. Quite la cubierta (4).
*Para los MFP de velocidad alta con/sin finalizador y para los MFP de velocidad media con el finalizador instalado.

5. Quite 2 tornillos (6) y, después, quite la cubierta de la ranura OPT1 (5).
* No utilice OPT2.

Entfernen der Einschubabdeckung

4. Die Abdeckung (4) entfernen.
* Bei schnellen MFPs mit/ohne Finisher oder mittelschnellen MFPs mit installiertem Finisher.

5. 2 Schrauben (6) entfernen und dann die Abdeckung (5) des Einschubs OPT1 entfernen.
* OPT2 nicht verrwenden.

Rimozione del coperchio vano

4. Rimuovere il coperchio (4).
* Per dispositivi MFP di fascia alta con/senza finisher e per dispositivi di fascia media con finisher installato.

5. Rimuovere le 2 viti (6) e quinidi rimuovere il coperchio (5) del vano OPT1.
* Non utilizzare OPT2.

拆下插槽盖板

4. 拆下盖板 (4)。
※ 对于高速机来说装订器可装可不装，对于中速机来说要安装。

5. 拆除 2 颗螺丝 (6)，拆下 OPT1 的插槽盖板 (5)。
※ 不使用 OPT2。

슬롯커버 제거

4. 커버 (4) 를 제거합니다 .
※ 피니셔 장착 및 비장착 고속 MFP 및 피니셔 장착 중속 MFP.

5. 나사 (6) 2 개를 제거하고 OPT1 의 슬롯커버 (5) 를 제거합니다 .
※OPT2 는 사용하지 말 것 .

スロットカバーの取り外し

4. カバー(4) を取り外す。
※ 高速 MFP の場合および中速 MFP にフィニッシャー装着時の場合。

5. ビス (6)2 本を外し、OPT1 のスロットカバー (5) を取り外す。
※OPT2 は使用しないこと。

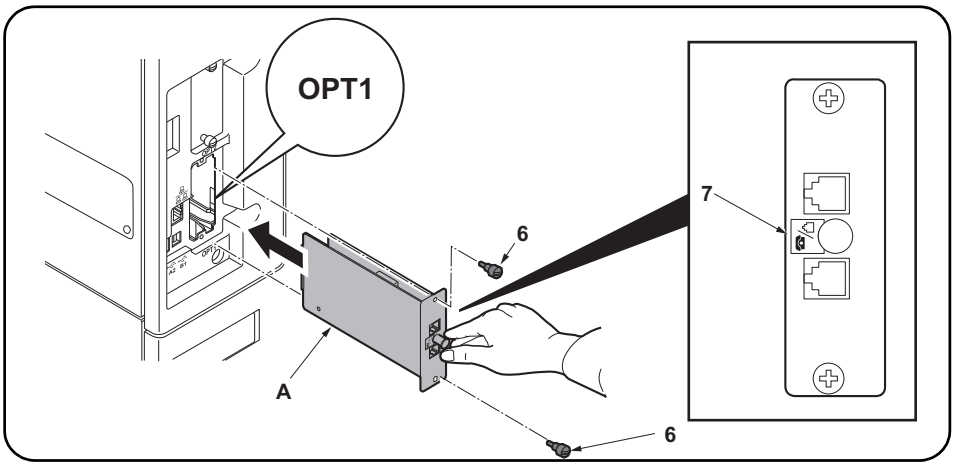

Install the FAX circuit board.

6. Insert the FAX circuit board (A) along the groove in OPT1 and secure the board with two screws (6) that have been removed in step 5.
Do not directly touch the FAX circuit board (A) terminal. Hold the top and bottom of the FAX circuit board, or the projection of the board to insert the FAX circuit board (A).
Direct the label (7) on to the FAX circuit board (A) as indicated in the illustration and insert the board along the groove.

Installer la carte à circuits FAX.

6. Insérer la carte à circuits FAX (A) le long de la rainure dans l'OPT1 et la fixer à l'aide des deux vis (6) retirées à l'étape 5.
Ne pas toucher directement la borne de la carte à circuits FAX (A). Tenir les parties inférieure et supérieure de la carte à circuits FAX ou la saillie de la carte pour insérer la carte à circuits FAX (A).Orienter l'étiquette (7) de la carte à circuits FAX (A) comme illustré et insérer la plaquette le long de la rainure.

Instale la tarjeta de circuitos de fax.

6. Inserte la tarjeta de circuitos de fax (A) a lo largo de la ranura de OPT1 y asegúrela con los dos tornillos (6) que ha quitado en el paso 5.
No toque directamente el terminal de la tarjeta de circuitos del fax (A). Sujete las partes superior e inferior de la tarjeta de circuitos de fax o la saliente de la tarjeta para insertar la tarjeta de circuitos de fax (A).Oriente la etiqueta (7) en la tarjeta de circuitos del FAX (A) como se indica en la ilustración e inserte la tarjeta a lo largo de la ranura.

Installieren der FAX-Leiterplatte.

6. FAX-Leiterplatte (A) in die Nut des Einbauschachts OPT1 einsetzen und Leiterplatte mit den in Schritt 5 ausgebauten Schrauben (6) befestigen.
Berühren Sie die Anschlüsse der FAX-Platine (A) nicht mit den Fingern. Die FAX-Leiterplatte (A) bein Einsetzen oben und unten oder an dem Vorsprung festhalten.
Die FAX-Leiterplatte (A) so in die Nut einsetzen, dass der Aufkleber (7) wie abgebildet zur Leiterplatte zeigt.

Installare la scheda a circuiti FAX.

6. Inserire la scheda a circuiti FAX (A) lungo l'incavo nell'OPT1 e fissare la scheda con le due viti (6) rimosse nell'operazione 5.
Non toccare direttamente il terminale della scheda a circuiti FAX (A). Per inserire il circuito FAX (A), tenere l'estremit superiore e la base della scheda a circuiti FAX, o la sporgenza della scheda a circuiti FAX. Orientare l'etichetta (7) sulla scheda a circuiti FAX (A) come indicato nell'illustrazione e inserire la scheda lungo l'incavo.

安装传真电路板

6. 沿着 OPT1 的沟槽插入传真电路板 (A) 并用在步骤 5 中拆下的两颗螺钉 (6) 固定电路板。
请勿直接触摸传真电路板 (A) 端子。
按住传真电路板的顶部和底部，或者按住电路板的突出部将传真电路板 (A) 插入。
将传真电路板 (A) 上的标签 (7) 保持图示中的方向，将电路板沿着沟槽方向插入。

FAX 회로기판 장착

6. OPT1 의 홈을 따라 FAX 회로기판 (A) 를 삽입하고 앞 순서 5 에서 제거한 나사 (6) 2 개로 고정합니다 .
FAX 회로기판 (A) 의 단자에 직접 닿지 않도록 할 것 .
FAX 회로기판 (A) 삽입 시 , 회로기판의 상하 또는 돌출부를 잡을 것 .
FAX 회로기판 (A) 를 부착된 라벨 (7) 그림 표기 방향으로 삽입할 것 .

FAX 基板の取り付け

6. OPT1 の溝に沿って FAX 基板 (A) を挿入し、手順 5 で外したビス (6)2 本で固定する。
FAX 基板 (A) の端子に直接触れないこと。
FAX 基板 (A) の挿入時は基板の上下か突起を持つこと。
FAX 基板 (A) は、貼り付けられているラベル (7) が図に示す方向になるように、挿入すること。

A

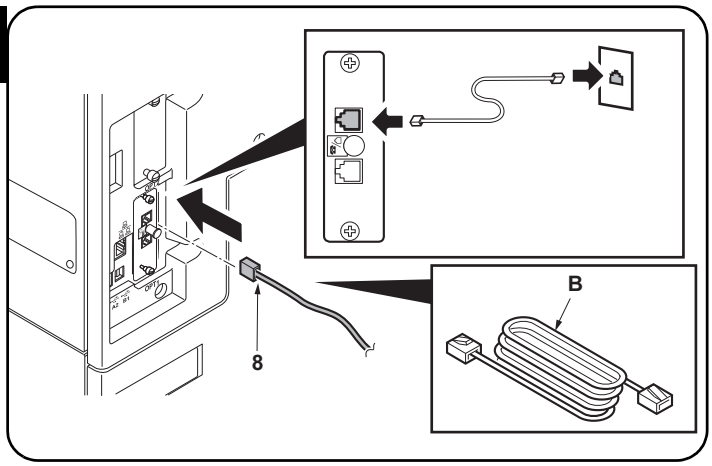

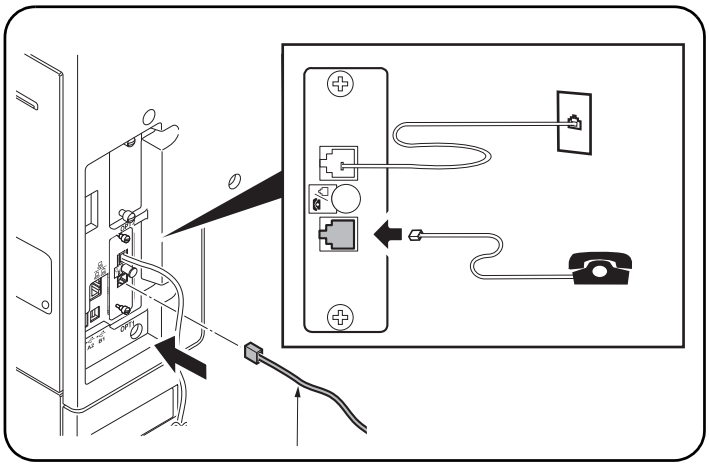

Connect the MFP to the telephone line.

7. Plug the modular connector cable (8) into the line terminal, and then connect the other end to the telephone line.

For 100 V/120 V/Australian or Chinese models, use the supplied modular connector cable (B).

Connect the MFP to the separate phone (except for New Zealand model).

8. Plug the modular connector cable (9) into the telephone terminal, and then connect the other end to the separate phone.

Connecter le MFP à la ligne de téléphone.

7. Brancher le câble du connecteur modulaire (8) à la borne de la ligne, puis connecter l'autre extrémité à la ligne de téléphone.

Pour les modèles 100 V/120 V/Australie ou Chine, utilisez le câble à connecteur modulaire (B) fourni.

Connecter le MFP au téléphone séparé.

8. Brancher le câble du connecteur modulaire (9) à la borne du téléphone, puis connecter l'autre extrémité au téléphone séparé.

Conecte el MFP a la línea telefónica.

7. Enchufe el cable del conector modular (8) en el terminal de línea y, a continuación, conecte el otro extremo a la línea telefónica.

Para los modelos de 100 V/120 V/Australiano o Chino, utilice el cable conector modular (B) suministrado.

Conecte el MFP al teléfono separado.

8. Enchufe el cable del conector modular (9) en el terminal del teléfono y, a continuación, conecte el otro extremo al teléfono separado.

Anschließen des MFP an die Telefonleitung.

7. Telefonmodulkabel (8) in die Gerätebuchse einstecken und das Kabel an der Telefondose anschließen.

Das mitgelieferte Modularsteckerkabel (B) für die 100-V/120-V/Australien- oder China-Modelle verwenden.

Anschließen des MFP an das separate Telefon.

8. Das Telefonmodulkabel (9) in die Telefonbuchse einstecken und das andere Ende an das separate Telefon anschließen.

Collegamento dell'MFP alla linea del telefono.

7. Inserire il cavo connettore modulare (8) nel terminale della linea, e quindi collegare l'altro terminale alla linea del telefono.

Per modelli da 100 V/120 V/Australia o Cina, utilizzare il cavo connettore modulare (B) in dotazione.

Collegamento dell'MFP al telefono separato.

8. Inserire il cavo connettore modulare (9) nel terminale del telefono, e quindi collegare l'altro terminale al telefono separato.

将 MFP 连接到电话线

7. 将模块接插件电缆 (8) 插入电话线端子，然后将另一端与电话线连接。

对于 100V/120V/ 澳大利亚或中国机型，请使用随附的模块接插件电缆 (B)。

将 MFP 连接到其它电话

8. 将模块接插件电缆 (9) 插入电话端子，然后将另一端与其他电话连接。

전화회선 연결

7. 모듈 코드 (8) 을 선 단자에 꽂는다 . 다른 쪽 플러그는 전화선에 연결한다 .

100V/120V/ 오스트레일리아 / 중국 스펙은 부속 모듈 코드 (B) 를 사용할 것 .

외부 전화에 연결

8. 모듈 코드 (9) 를 TEL 단자에 꽂습니다 . 다른 한 쪽의 플러그는 외부 전화에 연결합니다 .

電話回線との接続

7. モジュラーコード (8) をライン端子に差し込む。もう片方のプラグは、電話回線へ接続する。

100V/120V/ オーストラリア / 中国仕様は付属のモジュラーコード (B) を使用すること。

外付け電話との接続

8. モジュラーコード (9) を TEL 端子に差し込む。もう片方のプラグは、外付け電話と接続する。

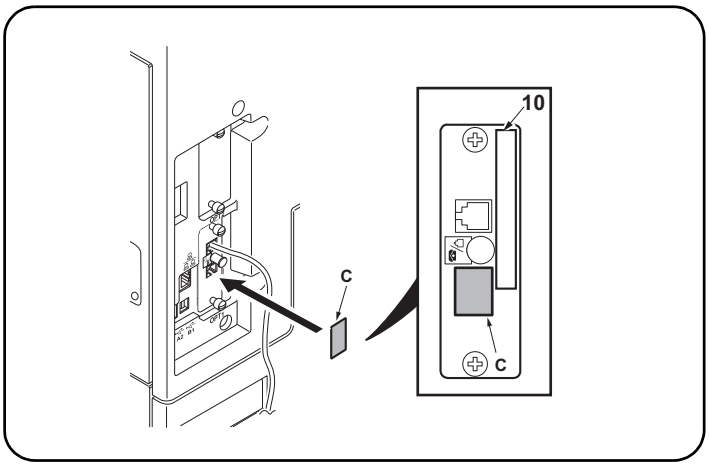

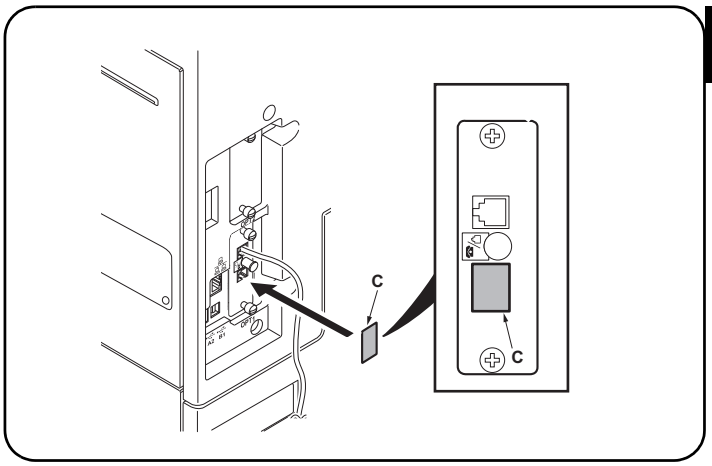

If you don't connect the MFP to the separate phone, wipe the surface of the telephone terminal with alcohol and adhere the terminal seal (C) upon the customer's request.
On 120 V models, be sure that it is not attached over the top of the approval label (10).

Seal the terminal (for New Zealand model).
9. Wipe the surface of the telephone terminal with alcohol and adhere the terminal seal (C).
Perform this procedure for New Zealand model only.

Si le MFP n'est pas connecté au téléphone séparé à la demande du client, nettoyer la surface de la borne de téléphone avec de l'alcool et apposer le joint de borne (C).
Sur les modèles 120 V, attention à ne pas installer en recouvrant le haut de l'étiquette d'approbation (10).

Fermer hermétiquement la borne (modèle pour la Nouvelle-Zélande).
9. Cette étape est superflue.

Si no conecta el MFP a un teléfono separado, limpie la superficie del terminal del teléfono con alcohol y pegue el sello del terminal (C), a solicitud del cliente.
En los modelos de 120 V, asegúrese de que no se fije sobre la etiqueta de aprobación (10).

Selle el terminal (para el modelo Nuevo Zelandés).
9. Este paso no es necesario.

Wenn der MFP nicht an das separate Telefon angeschlossen wird, die Oberfläche der Telefonbuchse mit Alkohol abwischen und Verschlusskappe (C) einsetzen, falls vom Kunden gewünscht.
Bei 120-V-Modellen darauf achten, dass der Aufkleber nicht den Genehmigungsaufkleber (10) verdeckt.

Versiegeln der Anschlussbuchse (für Neuseeland-Modell).
9. Dieser Schritt ist nicht erforderlich.

Nel caso in cui non si colleghi l'MFP al telefono separato, pulire la superficie del terminale del telefono con dell'alcol e applicare la guarnizione terminale (C) a richiesta del cliente.
Sui modelli da 120 V, assicurarsi che essa non venga applicata sopra l'etichetta di approvazione (10).

Sigillare il terminale (per il modello Nuova Zelanda).
9. Questo passo non è richiesto.

如果您没有将 MFP 连接至其他电话，请用酒精擦拭电话端子表面，并按照客户要求粘上端子密封 (C)。
120V 规格在粘贴时注意不要与认可标签 (10) 重叠。

安装端子密封（仅适用于新西兰型号）
9. 不需要本步骤。

외부 전화에 연결하지 않는 경우 , 고객의 요청에 따라 TEL 단자 주위를 알코올 청소하고 단자씰 (C) 을 붙입니다 .
120V 사양은 허가 라벨 (10) 에 겹치지 않도록 붙일 것 .

단자씰의 부착 (뉴질랜드 사양만)
9. 작업 불필요 .

外付け電話と接続しない場合、お客様の要望により、TEL 端子周囲をアルコール清掃し、端子シール (C) を貼り付ける。
120V 仕様は認可ラベル (10) に重ならないように、貼りつけること。

端子シールの貼り付け（ニュージーランド仕様のみ）
9. この作業は不要。

A

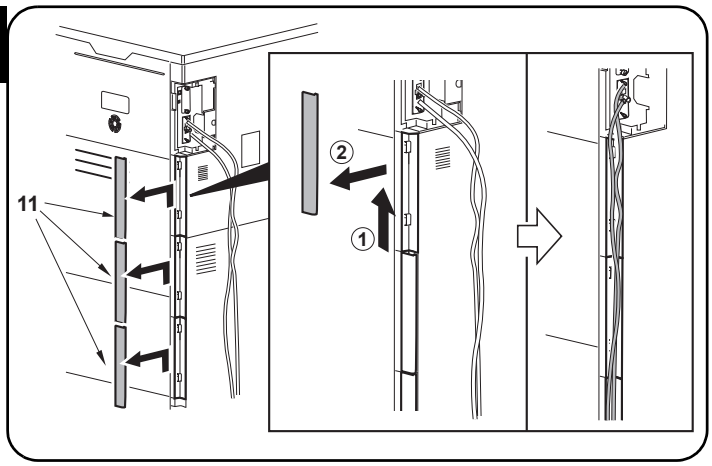

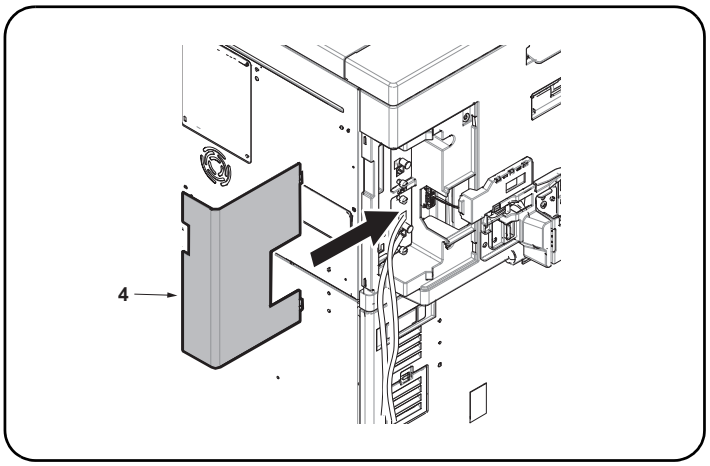

Wiring the modular connector cable
(High-speed MFPs only)

10. Remove the covers (11) and run the modular connector cable as shown in the figure.
11. Reinstall the covers (11).
12. Install the cover (4) which was removed in step 4.
* For high-speed MFPs with/without the finisher and for medium-speed MFPs with the finisher installed.
* This work is not required if a multiport is installed along with the fax system (OPT1).

Câblage du câble à connecteur modulaire
(MFP à grande vitesse uniquement)

10. Déposer les couvercles (11) et implanter le câble à connecteur modulaire comme illustré par la figure.
11. Reposer les couvercles (11).
12. Installer le cache (4) qui a été retiré à l'étape 4.
* Pour les imprimantes multifonction à grande vitesse avec/sans module de finition et pour les imprimantes multifonction à vitesse moyenne avec le module de finition installé.
* Cette opération n'est pas nécessaire si un port multiple est installé avec le fax (OPT1).

Tendido del cable conector modular
(Solo para las MFP de alta velocidad)

10. Quite las cubiertas (11) y tienda el cable conector modular como se muestra en la ilustración.
11. Vuelva a instalar las cubiertas (11).
12. Instale la cubierta (4) que se quitó en el paso 4.
* Para los MFP de velocidad alta con/sin finalizador y para los MFP de velocidad media con el finalizador instalado.
* Esto no es necesario realizarlo si hay instalado un puerto múltiple con el sistema de fax (OPT1).

Verlegung des Modularsteckerkabels
(Nur MFP der Hochleistungsklasse)

10. Die Abdeckungen (11) entfernen und das Modularsteckerkabel gemäß der Abbildung verlegen.
11. Die Abdeckungen (11) wieder anbringen.
12. Installieren Sie die Abdeckung (4), die in Schritt 4 entfernt wurde.
* Bei schnellen MFPs mit/ohne Finisher oder mittelschnellen MFPs mit installiertem Finisher.
*Dies ist nicht nötig, wenn eine zweite Leitung zusammen mit dem FAX-System (OPT1) installiert ist.

Cablaggio del cavo connettore modulare
(Solo per MFP a velocità alta)

10. Rimuovere i coperchi (11) e far passare il cavo connettore modulare come indicato nella figura.
11. Reinstallare i coperchi (11).
12. Installare il coperchio (4) rimosso al punto 4.
* Per dispositivi MFP di fascia alta con/senza finisher e per dispositivi di fascia media con finisher installato.
* Questa operazione non è richiesta quando con il modulo fax (OPT1) viene installata una porta multipla.

电话线的配线（仅限高速 MFP 时）

10. 拆下盖板（11），将电话线如图所示穿过。
11. 安装盖板（11）。
12. 安装在步骤 4 中取下的盖板（4）。
※ 对于高速机来说装订器可装可不装，对于中速机来说要安装。
※ 双路传真系统和传真系统（OPT1）同时安装时，不需要此步骤。

모듈러 코드의 배선 (고속 MFP 의 경우만)

10. 커버 (11) 를 떼어 내고 모듈러 코드를 그림과 같이 지나가게 합니다 .
11. 커버 (11) 을 장착합니다 .
12. 4 단계에서 분리한 커버 (4) 를 설치합니다 .
※ 피니셔 장착 및 비장착의 고속 MFP 및 피니셔 장착 중속 MFP.
※ 이 작업은 멀티 포트가 팩스 시스템 (OPT1) 과 함께 설치되어 있는 경우에는 필요하지 않습니다 .

モジュラーコードの配線(高速 MFP の場合のみ)

10. カバー(11)を取り外し、モジュラーコードを図のように通す。
11. カバー(11)を取り付ける。
12. 手順 4 で取り外したカバー(4)を取り付ける。
※ 高速 MFP の場合および中速 MFP にフィニッシャー装着時の場合。
※ ファクスシステム (OPT1) と同時にマルチポートを設置する場合この作業は不要。

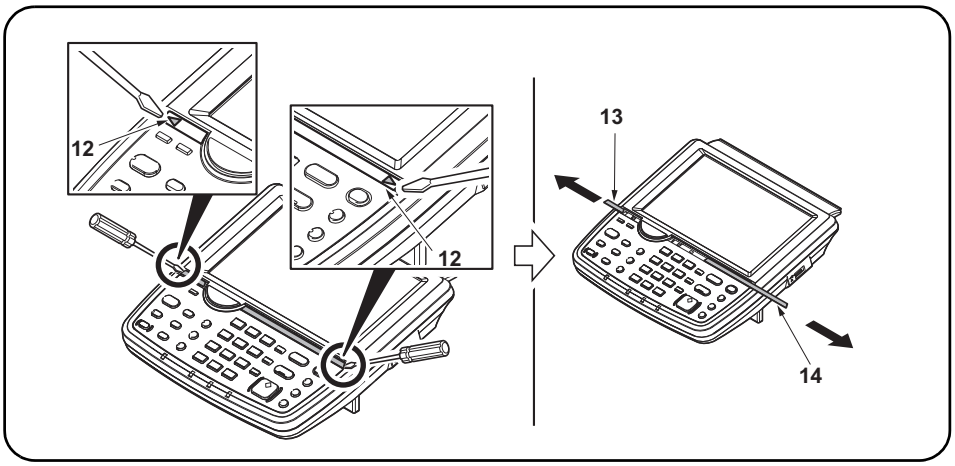

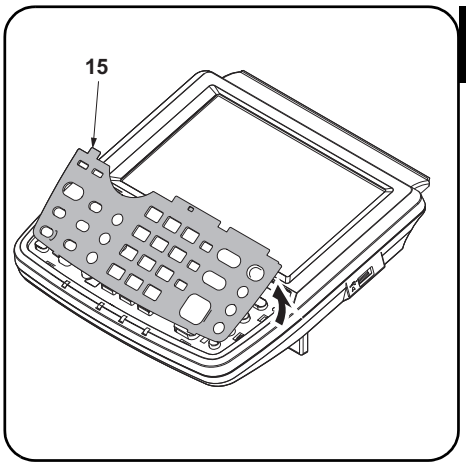

Attach the alphabet labels (excluding 100 V models).

13. Insert a flat-head screwdriver at the tip indicated by the arrows (12) as shown on the left, and slide the operation panel covers (13) (14) to remove them.

14. Remove the clear panel (15).

Apposer les étiquettes de l'alphabet (Sauf sur les modèles 100 V).

13. Insérer un tournevis à lame à l'endroit repéré par les flèches (12) comme illustré ci-contre à gauche et faire glisser les couvercles du panneau de commande (13) (14) pour les déposer.

14. Déposer le panneau transparent (15).

Fije las etiquetas de alfabeto (a excepción de los modelos de 100 V).

13. Inserte un destornillador de pala plana en la punta que indican las flechas (12) como se muestra a la izquierda y deslice las cubiertas del panel de trabajo (13) (14) para quitarlas.

14. Quite el panel transparente (15).

Anbringen der Alphabetaufkleber (ausgenommen 100-V-Modelle).

13. Einen flachen Schraubendreher an der links mit Pfeilen (12) bezeichneten Spitze einschieben und die Bedienfeldabdeckungen (13) (14) verschieben, um sie dann abzunehmen.

14. Die durchsichtige Platte (15) entfernen.

Applicare le etichette alfabetiche (esclusi i modelli da 100 V).

13. Inserire un cacciavite a testa piana nel punto indicato dalla freccia (12) come mostrato sulla sinistra, e slittare i coperchi (13) (14) del pannello operativo per rimuoverli.

14. Rimuovere il pannello trasparente (15).

粘贴英文字母标签（100V 规格以外）

13. 如图所示，在▲箭头（12）前方插入一字螺丝刀，滑动并取下操作面板的盖板（13）（14）。

14. 拆下透明面板（15）。

알파벳 라벨의 부착 (100V 사양 이외)

13. 그림과 같이 ▲ 표시 (12) 앞에 마이너스 드라이버를 삽입해 조작 판넬의 커버 (13) (14) 를 미끄러트리면서 떼어 냅니다 .

14. 클리어 판넬 (15) 을 제거합니다 .

アルファベットラベルの貼り付け（100V 仕様以外）

13. この作業は不要。

14. この作業は不要。

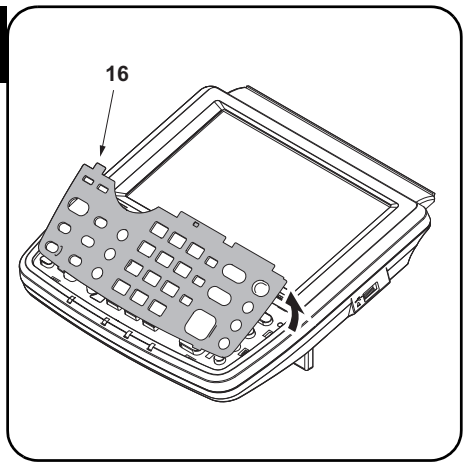

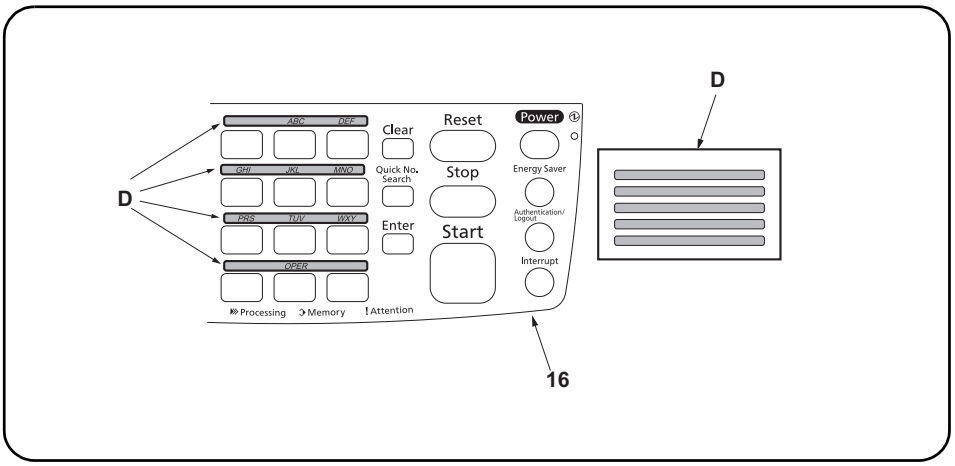

15. Remove the operation panel sheet (16).

16. Wipe the area above the numeric keys on the operation panel sheet (16) with alcohol and attach the alphabet labels (D).
In Asia and Oceania, use PQRS TUV WXYZ label, and do not use PRS TUV WXY and OPER labels.

---

15. Déposer la tôle du panneau de commande (16).

16. Nettoyer à l'alcool la surface au-dessus des touches numériques sur la tôle du panneau de commande (16) et apposer les étiquettes alphabétiques (D).
En Asie et Océanie, utiliser l'étiquette PQRS TUV WXYZ et pas les étiquettes PRS TUV WXY et OPER.

---

15. Quite la hoja del panel de trabajo (16).

16. Limpie el área sobre las teclas numéricas de la hoja del panel de trabajo (16) con alcohol y fije las etiquetas de alfabeto (D).
En Asia y Oceanía, utilice la etiqueta PQRS TUV WXYZ y no use las PRS TUV WXY ni las OPER.

---

15. Die Bedienfeldfolie (16) entfernen.

16. Den Bereich über den Zifferntasten an der Bedienfeldfolie (16) mit Alkohol abwischen und die Alphabetaufkleber (D) hier anbringen.
In Asien und Ozeanien den Aufkleber PQRS TUV WXYZ verwenden; nicht die Aufkleber PRS TUV WXY und OPER verwenden.

---

15. Rimuovere il foglio (16) del pannello operativo.

16. Pulire l'area sopra i tasti numerici sul foglio del pannello operativo (16) con alcool ed applicare le etichette alfabetiche (D).
In Asia ed Oceania, utilizzare l'etichetta PQRS TUV WXYZ e non utilizzare le etichette PRS TUV WXY e OPER.

---

15. 拆下操作面板页（16）。

16. 使用酒精清洁操作面板页（16）的数字键上部，粘贴英文字母标签 (D)。
在亚洲和大洋州，请使用 PQRS TUV WXYZ 标签，而不要使用 PRS TUV WXY 和 OPER 标签。

---

15. 조작판넬시트 (16) 를 제거합니다 .

16. 조작판넬시트 (16) 상에 숫자키 윗측을 알코올 청소하고 알파벳 라벨 (D) 을 붙입니다 . 아시아 / 오세아니아에서는「PRS TUV WXY」및「OPER」라벨을 사용하지 말고「PQRS TUV WXYZ」의 라벨을 사용할 것 .

---

15. この作業は不要。

16. この作業は不要。

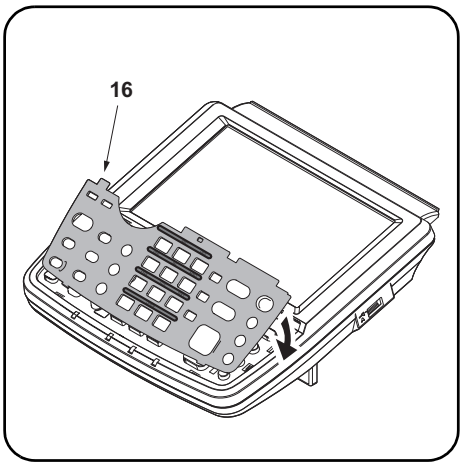

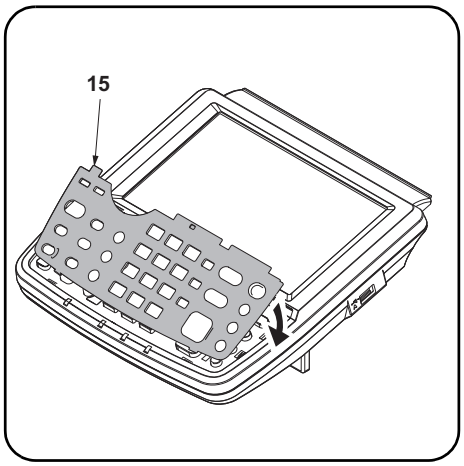

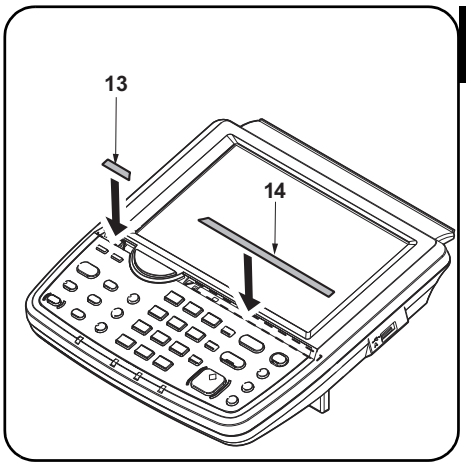

17. Attach the operation panel sheet (16).

18. Reinstall the clear panel (15).

19. Reinstall the operation panel covers (13) (14).

---

17. Fixer la tôle du panneau de commande (16).

18. Reposer le panneau transparent (15).

19. Reposer les couvercles du panneau de commande (13) (14).

---

17. Fije la hoja del panel de trabajo (16).

18. Vuelva a instalar el panel transparente (15).

19. Vuelva a instalar las cubiertas del panel de trabajo (13) (14).

---

17. Die Bedienfeldfolie (16) anbringen.

18. Die durchsichtige Platte (15) wieder anbringen.

19. Die Bedienfeldabdeckungen (13) (14) wieder anbringen.

---

17. Applicare il foglio del pannello operativo (16).

18. Reinstallare il pannello trasparente (15).

19. Reinstallare i coperchi (13) (14) del pannello operativo.

---

17. 安装操作面板页（16）。

18. 安装透明面板（15）。

19. 安装操作面板的盖板（13）（14）。

---

17. 조작판넬시트 (16) 를 붙입니다 .

18. 클리어판넬 (15) 를 부착합니다 .

19. 조작판넬 커버 (13) (14) 을 부착합니다 .

---

17. この作業は不要。

18. この作業は不要。

19. この作業は不要。

A

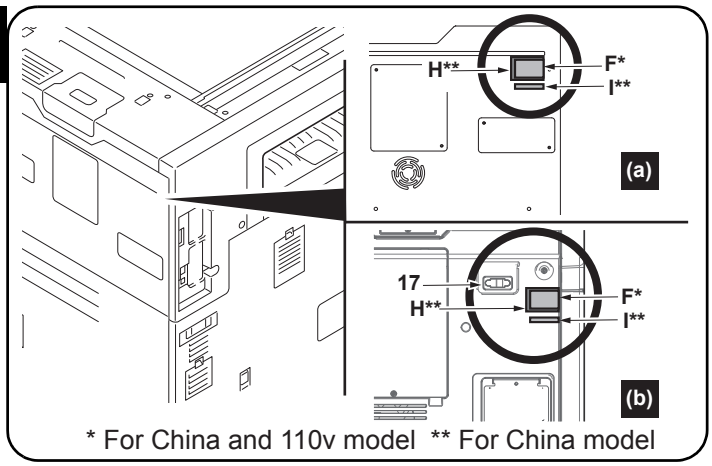

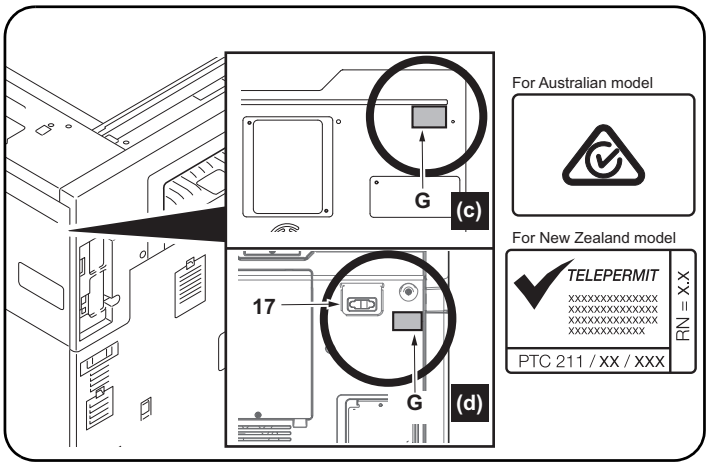

Attach the PTT label (for 110 V models only).

20. Wiping with alcohol in the position as shown above. Attach the PTT label (F) at the point as shown above.

If there isn't a connector(17),see the figure(a).

If there is a connector(17),see the figure(b).

Attach the approval label (for Australian/New Zealand model only).

21. Wiping with alcohol in the position as shown above. Attach the approval label (G) at the point as shown above.

If there isn't a connector(17),see the figure(c).

If there is a connector(17),see the figure(d).

Perform this procedure for Australian/New Zealand model only.

Fixer l'étiquette d'approbation (pour la Chine, modèles 110 V seulement).

20. Cette étape est superflue.

Fixer l'étiquette d'approbation (modèle pour l'Australie/Nouvelle-Zélande seulement).

21. Cette étape est superflue.

Coloque la etiqueta de aprobación (para China, solo para los modelos de 110 V).

20. Este paso no es necesario.

Coloque la etiqueta de aprobación (sólo para los modelos Australiano/Nuevo Zelandés)

21. Este paso no es necesario

Den Genehmigungsaufkleber anbringen (für China nur 110-V-Modelle).

20. Dieser Schritt ist nicht erforderlich.

Den Genehmigungsaufkleber anbringen (nur für Australien/Neuseeland-Modell).

21. Dieser Schritt ist nicht erforderlich.

Applicare l'etichetta di approvazione (per Cina, solo per i modelli da 110 V).

20. Questo passo non è richiesto.

Applicare l'etichetta di approvazione (solo per il modello Australia/Nuova Zelanda).

21. Questo passo non è richiesto.

粘贴规格标签（仅限中国规格）

20. 在粘贴标签或贴片前，请用酒精清洁粘贴位置。按照图示位置来粘贴贴片（H）。把规格标签（F）粘贴在贴片（H）上面。按照图示位置来粘贴名称标签（I）。
如没有连接端子（17），请参照图（a）
如有连接端子（17），请参照图（b）

粘贴规格标签（仅适用于澳大利亚 / 新西兰型号）

21. 不需要本步骤。

규격라벨의 부착 (중국 , 110V 사양만)

20. 이 단계가 필요하지 않습니다 .

규격라벨의 부착 (오스트레일리아 / 뉴질랜드 사양만)

21. 이 단계가 필요하지 않습니다 .

規格ラベルの貼り付け（中国、110V 仕様のみ）

20. この作業は不要。

規格ラベルの貼り付け（オーストラリア / ニュージーランド仕様のみ）

21. この作業は不要。

Initialize the FAX circuit board.

1. Plug the MFP into a power outlet, and turn on the main power.
2. Perform the maintenance mode U600 to initialize the FAX PWBs

---

Initialiser la carte à circuits FAX.

1. Brancher le MFP sur une prise d'alimentation et le mettre sous tension.
2. Exécuter le mode maintenance U600 pour initialiser les cartes de circuit imprimé du fax .

Inicialice la tarjeta de circuitos FAX.

1. Conecte el MFP a un receptáculo de pared y encienda el interruptor principal.
2. Ejecute el modo de mantenimiento U600 para inicializar los FAX PWB.

Initialisieren der FAX-Leiterplatte.

1. Netzstecker des MFP in eine Steckdose stecken und Hauptschalter einschalten.
2. Führen Sie den Wartungsmodus U600 aus, um die FAX-Karte zu initialisieren.

Inizializzare la scheda a circuiti FAX.

1. Collegare l'MFP ad una presa di corrente e portare l'interruttore principale su On.
2. Eseguire il modo manutenzione U600 per inizializzare le schede PWB FAX.

传真电话板的初始化

1. 将 MFP 的电源插头插入电源插座，打开主电源。
2. 执行维修保养模式 U600，初始化传真电路板。

FAX 회로기판 초기화

1. MFP 본체 전원플러그를 콘센트에 꽂고 주 전원 스위치를 ON 으로 한다 .
2. 메인터넌스 모드 U600 을 실행하여 FAX 회로기판을 초기화합니다 .

FAX 基板の初期化

1. MFP 本体の電源プラグをコンセントに差し込み、主電源スイッチを ON にする。
2. メンテナンスモード U600 を実行し、FAX 基板を初期化する。

A

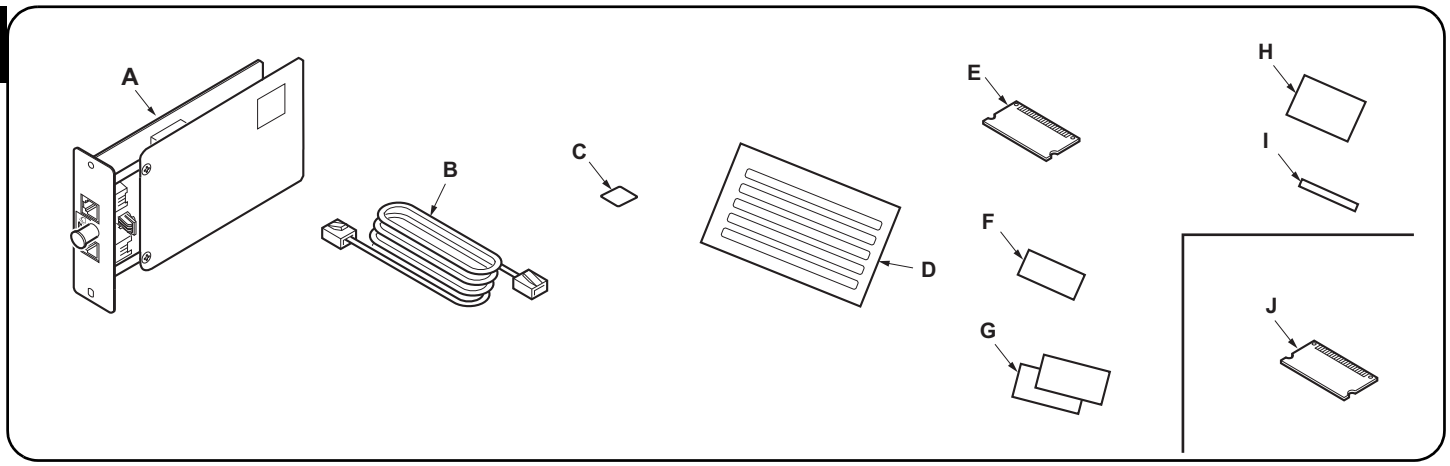

When installing the multiport on a machine (A) which has the 'Home' key in the operation panel

Supplied parts

A. FAX circuit board 1
B. Modular connector cable (120 V/Australian model only) PJJWC0016Z (UL Listed.HUAN HSIN Type TL:120 V only) 1
C. Terminal seal..... 1
D. Alphabet label..... 1
E. Memory DIMM (16 MB) 1
F. PTT label (110V model only) 1
G. Approval label (Australian/New Zealand models only)..... 2

Option

J. Memory DIMM (128 MB) 1

(H) and (I) are not supplied.
(D), (E), (F), (G) and (J) are not used.
Be sure to remove any tape and/or cushioning materials from the parts supplied.

Lors de l'installation du port multiple sur une machine (A) disposant de la touche 'Accueil' sur le panneau de commande

Pièces fournies

A. Carte à circuits FAX..... 1
B. Câble du connecteur modulaire (modèles pour l'Australie/120 V seulement)..... 1
C. Joint de borne..... 1
D. Etiquette de l'alphabet..... 1
E. Mémoire DIMM (16 MB) 1

Option

J. Mémoire DIMM (128 MB) 1

(F), (G), (H) et (I) ne sont pas fournis.
(D), (E) et (J) ne sont pas utilisés.

Veillez à retirer les morceaux de bande adhésive et/ou les matériaux de rembourrage des pièces fournies.

Al instalar un puerto múltiple en una máquina (A) que dispone de la tecla 'Inicio' en el panel de controles

Partes suministradas

A. Tarjeta de circuitos de fax..... 1
B. Cable conector modular (sólo para modelos de 120 V/Australianos)..... 1
C. Sello del terminal..... 1
D. Etiqueta de alfabeto..... 1
E. Memoria DIMM (16 MB) 1

Opción

J. Memoria DIMM (128 MB) 1

(F), (G), (H) y (I) no se suministran.
(D), (E) y (J) no se utilizan.

Asegúrese de quitar todas las cintas y/o material amortiguador de las partes suministradas.

Bei Installation einer zweiten Leitung in einem Gerät (A), das über die Taste 'Startseite' im Bedienfeld verfügt

Enthaltene Teile

A. FAX-Leiterplatte..... 1
C. Verschlusskappe 1
D. Alphabetaufkleber..... 1
E. Speicher-DIMM (16 MB) 1

Option

J. Speicher-DIMM (128 MB) 1

(B), (F), (G), (H) und (I) liegen nicht bei.
(D), (E) und (J) werden nicht benötigt.

Stellen Sie sicher, dass sämtliche Klebebänder und/oder Polstermaterial von den gelieferten Teilen entfernt wurden.

Per l'installazione di una porta multipla su una macchina (A) dotata di tasto 'Home' sul pannello comandi

Parti fornite

A. Scheda a circuiti FAX 1
C. Guarnizione terminale 1
D. Etichetta alfabetica 1
E. Memoria DIMM (16 MB) 1

Opzioni

J. Memoria DIMM (128 MB) 1

(B), (F), (G), (H) e (I) non sono in dotazione.
(D), (E) e (J) non sono utilizzati.

Rimuovere tutti i nastri adesivi e/o i materiali di protezione dalle parti fornite.

当安装双路传真系统到那些操作面板上有 ' 主界面 ' 按键的机器 (A) 时

附属品

A. 传真电路板..... 1
B. 电话线..... 1
C. 端子密封..... 1
D. 英文字母标签..... 1
E. 内存模组 DIMM (16MB) 1
F. 规格标签 1
H. 贴片 1
I. 名称标签 1

选购件

J. 内存模组 DIMM (128MB) 1

(B), (F), (G), (H), (I) 并非附属品。
不使用 (D),(E),(F),(H),(I) 和 (J)。

如果附属品上带有固定胶带，缓冲材料时务必揭下。

조작판넬에 ' 홈 ' 키가 있는 본체 (A) 에 멀티 포트를 설치하는 경우

동봉품

A. FAX 기판 1
C. 단자씰.....1
D. 알파벳 라벨.....1
E. 메모리 DIMM (16MB) 1

옵션

J. 메모리 DIMM (128MB) 1

(B), (F), (G), (H), (I) 는 동봉되어 있지 않습니다 .
(D), (E), (J) 는 사용되지 않습니다 .

동봉품에 고정 테이프 , 완충재가 붙어 있는 경우에는 반드시 제거하십시오 .

操作パネルに ‘ ホーム ’ キーがある機械 (A) にマルチポートを設置する場合

同梱品

A. FAX 基板 1
B. モジュラーコード..... 1
C. 端子シール..... 1
E. メモリーDIMM(16MB)..... 1

オプション

J. メモリーDIMM(128MB) 1

(D),(F),(G),(H),(I) は、同梱されていない。
(E),(J) は、使用しない。

同梱品に固定テープ、緩衝材が付いている場合は必ず取り外すこと。

NOTICE
References to medium-speed MFPs in this document denote 25/25, 30/30, 35/35, 45/45 and 55/50 ppm color machines, and 30, 35, 45 and 55 ppm monochrome machines.
References to high-speed MFPs in this document denote 65/65 and 75/70 ppm color machines, and 65 and 80 ppm monochrome machines.
(The generic procedure figures in this document show medium-speed MFPs.)
If the finisher is already installed, remove the finisher before installing FAX System(W).Before starting installation, be sure to turn the main power switch of the machine off, and unplug the power plug from the wall outlet.

REMARQUE
Dans le présent document, les références aux MFP à vitesse moyenne renvoient aux machines couleurs 25/25, 30/30, 35/35, 45/45 et 55/50 ppm et aux machines monochromes 30, 35, 45 et 55 ppm.
Dans le présent document, les références aux MFP à grande vitesse renvoient aux machines couleurs 65/65 et 75/70 ppm et aux machines monochromes 65 et 80 ppm. (Dans ce document, les chiffres des processus génériques renvoient aux MPF à vitesse moyenne.)
Si le retoucheur est déjà en place, le déposer avant de monter le FAX System(W).
Avant de commencer l'installation, s'assurer de mettre la machine hors tension et de débrancher la fiche d'alimentation de la prise murale.

AVISO
Las referencias a las MFP de velocidad media de este documento corresponden a las máquinas a color de 25/25, 30/30, 35/35, 45/45 y 55/50 ppm y a las máquinas monocromáticas de 30, 35, 45 y 55 ppm.
Las referencias a las MFP de alta velocidad de este documento corresponden a las máquinas a color de 65/65 y 75/70 ppm y a las máquinas monocromáticas de 65 y 80 ppm. (Las ilustraciones de procedimientos genéricos de este documento muestran las MFP de velocidad media.)
Si el finalizador ya se encuentra instalado, desmóntelo antes de instalar el FAX System(W).
Antes de iniciar la instalación, asegúrese de apagar el interruptor de encendido de la máquina y desenchufar el cable de alimentación de la toma de pared.

ANMERKUNG
Angaben für MFP der mittleren Leistungsklasse in dieser Anleitung gelten für die 25/25, 30/30, 35/35, 45/45 und 55/50 ppm Vollfarbenkopierer sowie für die 30, 35, 45 und 55 ppm Monochrommaschinen.
Angaben für MFP der Hochleistungsklasse in dieser Anleitung gelten für die 65/65 und 75/70 ppm Vollfarbenkopierer sowie für die 65 und 80 ppm Monochrommaschinen. (Die Abbildungen der allgemeinen Prozeduren zeigen MFP der mittleren Leistungsklasse.)
Falls der Finisher schon installiert ist, müssen Sie ihn ausbauen, bevor Sie das FAX System(W) installieren.
Bevor Sie mit der Installation beginnen überzeugen Sie sich, dass der Netzschalter des Geräts ausgeschaltet und das Stromkabel aus der Steckdose gezogen ist.

AVVISO
I riferimenti per le MFP a velocità media riportati in questo documento indicano le macchine a colori 25/25, 30/30, 35/35, 45/45 e 55/50 ppm, e le macchine monocromatiche 30, 35, 45 e 55 ppm.
I riferimenti per le MFP a velocità alta riportati in questo documento indicano le macchine a colori 65/65 e 75/70 ppm, e le macchine monocromatiche 65 e 80 ppm. (Le figure della procedura generica riportate in questo documento mostrano le MFP a velocitò media.)
Se la finitrice è già installata, rimuovere la finitrice prima di installare il FAX System(W).
Prima di iniziare l'installazione, spegnere la macchina e scollegare la spina dalla presa di corrente.

注意
本文中的中速 MFP 代表彩色 25/25 页机型、30/30 页机型、35/35 页机型、45/45 页机型、55/50 页机型、黑白 30 页机型、35 页机型、45 页机型、55 页机型。
本文中的高速 MFP 代表彩色 65/65 页机型、75/70 页机型、黑白 65 页机型、80 页机型。（本文中的通用步骤的插图为中速 MFP。）
已安装装订器时，必须先拆下装订器再安装 FAX System(W)。
安装前务必关闭机器的主电源开关，并从墙壁插座拔下电源插头。

주의
본문 중 중속 MFP 는 컬러 25/25, 30/30, 35/35, 45/45, 55/50 ppm 기종 , 흑백 30, 35, 45, 55 ppm 기종을 나타냅니다 .
본문 내 고속 MFP 는 컬러 65/65, 75/70 ppm 기종 , 흑백 65, 80 ppm 기종을 나타냅니다 . (본문에있는 일반적인 순서 일러스트는 중속 MFP 가 보여집니다 .)
피니셔가 이미 장착되어 있는 경우에는 피니셔를 제거하고 FAX System(W) 를 설치할 것 .
설치 시작하기 전에 반드시 본체의 주 전원 스위치를 끄고 벽 콘센트에서 전원 플러그를 분리하십시오 .

注意
本文中の中速 MFP はカラー機の 25/25 枚機、30/30 枚機、35/35 枚機、45/45 枚機、55/50 枚機、モノクロ機の 30 枚機、35 枚機、45 枚機、55 枚機を表す。
本文中の高速 MFP はカラー機の 65/65 枚機、75/70 枚機、モノクロ機の 65 枚機、80 枚機を表す。(本文中の共通手順イラストは中速 MFP とする。)
フィニッシャーがすでに装着されている場合は、フィニッシャーを取り外してから、FAX System(W) を取り付けること。
必ず機械本体の主電源スイッチを OFF にし、機械本体の電源プラグを抜いてから作業すること。

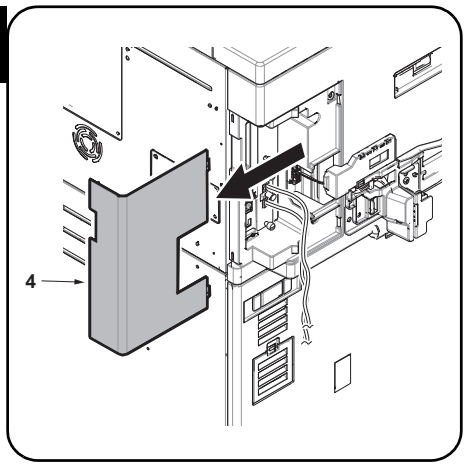

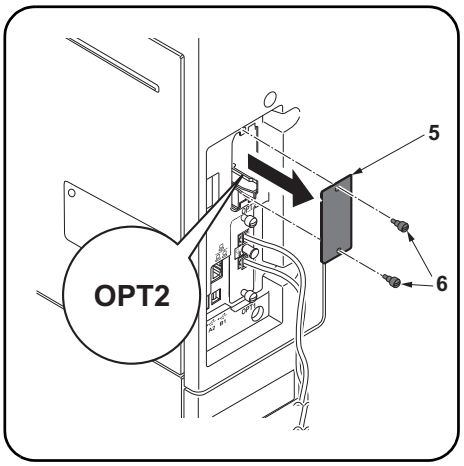

Procedure
Removing the slot cover

1. Remove the cover (4).
* For high-speed MFPs with/without the finisher and for medium-speed MFPs with the finisher installed.
* This work is not required if a multiport is installed along with the fax system (OPT1).

2. Remove 2 screws (6) and then remove the OPT2 slot cover (5).

Procédure
Dépose du couvercle de la fente

1. Déposer le couvercle (4).
* Pour les imprimantes multifonction à grande vitesse avec/sans module de finition et pour les imprimantes multifonction à vitesse moyenne avec le module de finition installé.
* Cette opération n'est pas nécessaire si un port multiple est installé avec le fax (OPT1).

2. Déposer les 2 vis (6) puis le couvercle de la fente OPT2 (5).

Procedimiento
Desmontaje de la cubierta de la ranura

1. Quite la cubierta (4).
* Para los MFP de velocidad alta con/sin finalizador y para los MFP de velocidad media con el finalizador instalado.
* Esto no es necesario realizarlo si hay instalado un puerto múltiple con el sistema de fax (OPT1).

2. Quite 2 tornillos (6) y, después, quite la cubierta de la ranura OPT2 (5).

Vorgehensweise
Entfernen der Einschubabdeckung

1. Die Abdeckung (4) entfernen.
* Bei schnellen MFPs mit/ohne Finisher oder mittelschnellen MFPs mit installiertem Finisher.
*Dies ist nicht nötig, wenn eine zweite Leitung zusammen mit dem FAX-System (OPT1) installiert ist.

2. 2 Schrauben (6) entfernen und dann die Abdeckung (5) des Einschubs OPT2 entfernen.

Procedura
Rimozione del coperchio vano

1. Rimuovere il coperchio (4).
* Per dispositivi MFP di fascia alta con/senza finisher e per dispositivi di fascia media con finisher installato.
* Questa operazione non è richiesta quando con il modulo fax (OPT1) viene installata una porta multipla.

2. Rimuovere le 2 viti (6) e quinidi rimuovere il coperchio (5) del vano OPT2.

安装步骤
拆下插槽盖板

1. 拆下盖板 (4)。
※ 对于高速机来说装订器可装可不装，对于中速机来说要安装。
※ 双路传真系统和传真系统（OPT1）同时安装时，不需要此步骤。

2. 拆除 2 颗螺丝 (6)，拆下 OPT2 的插槽盖板 (5)。

설치순서
슬롯커버 제거

1. 커버 (4) 를 제거합니다 .
※ 피니셔 장착 또는 비장착의 고속 MFP 및 피니셔 장착 중속 MFP.
※ 이 작업은 멀티 포트가 팩스 시스템 (OPT1) 과 함께 설치되어 있는 경우에는 필요하지 않습니다 .

2. 나사 (6) 2 개를 제거하고 OPT2 의 슬롯커버 (5) 를 제거합니다 .

取付手順
スロットカバーの取り外し

1. カバー(4) を取り外す。
※ 高速 MFP の場合および中速 MFP にフィニッシャー装着時の場合
※ ファクスシステム (OPT1) と同時にマルチポートを設置する場合この作業は不要。

2. ビス (6)2 本を外し、OPT2 のスロットカバー (5) を取り外す。

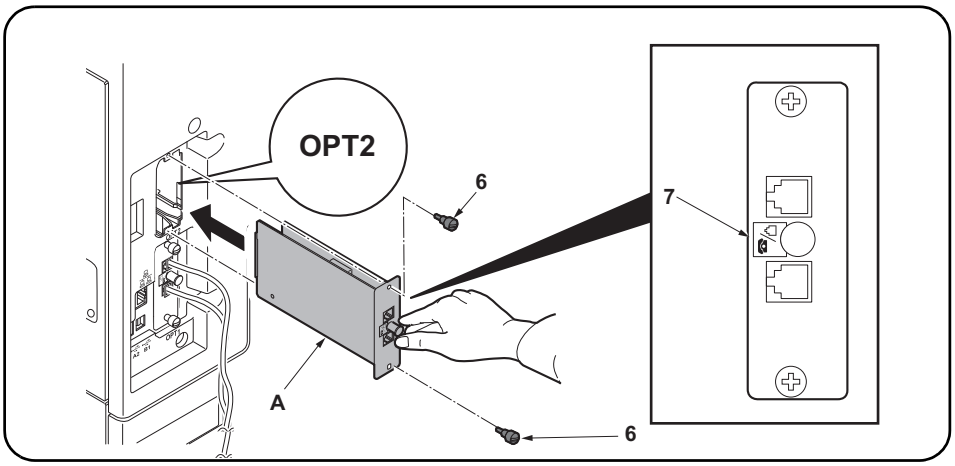

Install the FAX circuit board.

3. Insert the FAX circuit board (A) along the groove in OPT2 and secure the board with two screws (6) that have been removed in step 2.
Do not directly touch the FAX circuit board (A) terminal.
Hold the top and bottom of the FAX circuit board, or the projection of the board to insert the FAX circuit board (A).
Direct the label (7) on to the FAX circuit board (A) toward left side and insert the board along the groove.

Installer la carte à circuits FAX.

3. Insérer la carte à circuits FAX (A) le long de la rainure dans l'OPT2 et la fixer à l'aide des deux vis (6) retirées à l'étape 2.
Ne pas toucher directement la borne de la carte à circuits FAX (A).
Tenir les parties inférieure et supérieure de la carte à circuits FAX ou la saillie de la carte pour insérer la carte à circuits FAX (A).
Orienter l'étiquette (7) de la carte à circuits FAX (A) comme illustré et insérer la plaquette le long de la rainure.

Instale la tarjeta de circuitos de FAX.

3. Inserte la tarjeta de circuitos de fax (A) a lo largo de la ranura de OPT2 y asegúrela con los dos tornillos (6) que ha quitado en el paso 2.
No toque directamente el terminal de la tarjeta de circuitos del FAX (A).
Sujete las partes superior e inferior de la tarjeta de circuitos de FAX o la saliente de la tarjeta para insertar la tarjeta de circuitos de FAX (A).
Oriente la etiqueta (7) en la tarjeta de circuitos del FAX (A) como se indica en la ilustración e inserte la tarjeta a lo largo de la ranura.

Installieren der FAX-Leiterplatte.

3. FAX-Leiterplatte (A) in die Nut des Einbauschachts OPT2 einsetzen und Leiterplatte mit den in Schritt 2 ausgebauten Schrauben (6) befestigen.
Berühren Sie die Anschlüsse der FAX-Platine (A) nicht mit den Fingern.
Die FAX-Leiterplatte (A) bein Einsetzen oben und unten oder an dem Vorsprung festhalten.
Die FAX-Leiterplatte (A) so in die Nut einsetzen, dass der Aufkleber (7) wie abgebildet zur Leiterplatte zeigt.

Installare la scheda a circuiti FAX.

3. Inserire la scheda a circuiti FAX (A) lungo l'incavo nell'OPT2 e fissare la scheda con le due viti (6) rimosse nell'operazione 2.
Non toccare direttamente il terminale della scheda a circuiti FAX (A),
Per inserire il circuito FAX (A), tenere l'estremit superiore e la base della scheda a circuiti FAX, o la sporgenza della scheda a circuiti FAX.
Orientare l'etichetta (7) sulla scheda a circuiti FAX (A) come indicato nell'illustrazione e inserire la scheda lungo l'incavo.

安装传真电路板

3. 沿着 OPT2 的沟槽插入传真电路板 (A) 并用在步骤 2 中拆下的两颗螺钉 (6) 固定电路板。
请勿直接触摸传真电路板 (A) 端子。
按住传真电路板的顶部和底部，或者按住电路板的突出部将传真电路板 (A) 插入。
将传真电路板 (A) 上的标签 (7) 保持图示中的方向，将电路板沿着沟槽方向插入。

FAX 회로기판 장착

3. OPT2 의 홈을 따라 FAX 회로기판 (A) 를 삽입하고 앞 순서 2 에서 제거한 나사 (6) 2 개로 고정합니다 .
FAX 회로기판 (A) 의 단자에 직접 닿지 않도록 할 것 .
FAX 회로기판 (A) 삽입 시 , 회로기판의 상하 또는 돌출부를 잡을 것 .
FAX 회로기판 (A) 를 부착된 라벨 (7) 그림 표기 방향으로 삽입할 것 .

FAX 基板の取り付け

3. OPT2 の溝に沿って FAX 基板 (A) を挿入し、手順 2 で外したビス (6)2 本で固定する。
FAX 基板 (A) の端子に直接触れないこと。
FAX 基板 (A) の挿入時は基板の上下か突起を持つこと。
FAX 基板 (A) は、貼り付けられているラベル (7) が図に示す方向になるように、挿入すること。

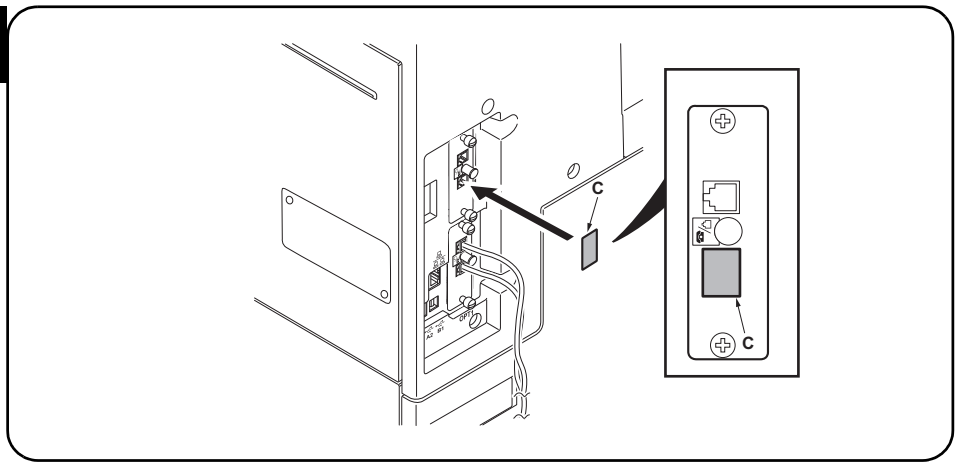

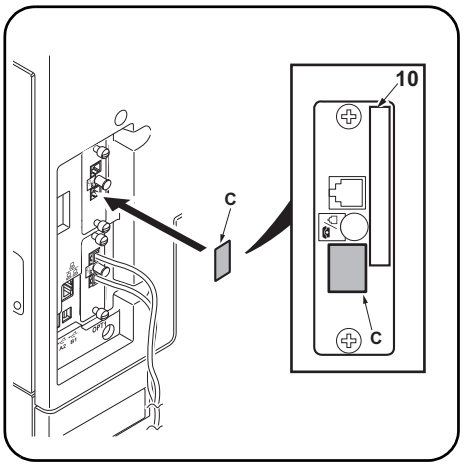

Seal the terminal.

4. Wipe the surface of the telephone terminal with alcohol and adhere the terminal seal (C).
The telephone terminal on the FAX circuit board installed to OPT2 is unavailable (invalid). Seal the terminal securely to prevent a user from connecting a separate phone.

On 120 V models, be sure that it is not attached over the top of the approval label (10).

Fermer hermétiquement la borne.

4. Nettoyer la surface de la borne de téléphone avec de l'alcool, et apposer le joint de borne (C).
La borne de téléphone de la carte à circuits FAX installée sur l'OPT2 n'est pas utilisable (invalide). Fermer hermétiquement la borne pour empêcher tout utilisateur de connecter un téléphone séparé.

Sur les modèles 120 V, attention à ne pas installer en recouvrant le haut de l'étiquette d'approbation (10).

Selle el terminal.

4. Limpie la superficie del terminal de teléfono con alcohol y pegue el sello de terminal (C).
El terminal de teléfono de la tarjeta de circuitos de FAX instalado en el OPT2 no está disponible (inválido). Selle firmemente el terminal para evitar que un usuario conecte un teléfono por separado.

En los modelos de 120 V, asegúrese de que no se fije sobre la etiqueta de aprobación (10).

Versiegeln der Anschlussbuchse.

4. Die Oberfläche der Telefonanschlussbuchse mit Alkohol abwischen und die Verschlusskappe (C) anbringen.
Die Telefonanschlussbuchse der in OPT2 installierten FAX-Leiterplatte ist nicht verfügbar (ungültig). Die Anschlussbuchse vollkommen versiegeln, um den Anschluss eines separaten Telefons zu verhindern.

Bei 120-V-Modellen darauf achten, dass der Aufkleber nicht den Genehmigungsaufkleber (10) verdeckt.

Sigillare il terminale.

4. Pulire la superficie del terminale del telefono con alcol e fare aderire la guarnizione terminale (C).
Il terminale del telefono sulla scheda a circuiti FAX installata su OPT2 non è disponibile (invalido). Sigillare il terminale saldamente per prevenire a un utente di collegare un telefono separato.

Sui modelli da 120 V, assicurarsi che essa non venga applicata sopra l'etichetta di approvazione (10).

安装端子密封

4. 用酒精擦拭电话端子表面并粘上端子密封 (C)。
安装在 OPT2 上的传真电路板的电话端子不可使用 (无效)。为了避免用户错误与其它电话连接，必须确实粘贴好端子密封。

120V 规格在粘贴时注意不要与认可标签 (10) 重叠。

단자씰의 부착

4. TEL 단자주위를 알코올청소하고 단자씰 (C) 을 부착합니다 .
OPT2 에 부착한 FAX 회로기판의 TEL 단자는 사용불가 (무효) 가 됩니다 . 사용자의 실수로 외부 전화에 연결하지 않도록 확실히 부착할 것 .

120V 사양은 허가 라벨 (10) 에 겹치지 않도록 붙일 것 .

端子シールの貼り付け

4. TEL 端子周囲をアルコール清掃し、端子シール (C) を貼り付ける。
OPT2 に取り付けた FAX 基板の TEL 端子は使用不可(無効)となる。ユーザーが誤って外付け電話を接続しないよう確実に貼り付けること。

120V 仕様は認可ラベル(10)に重ならないように、貼り付けること。

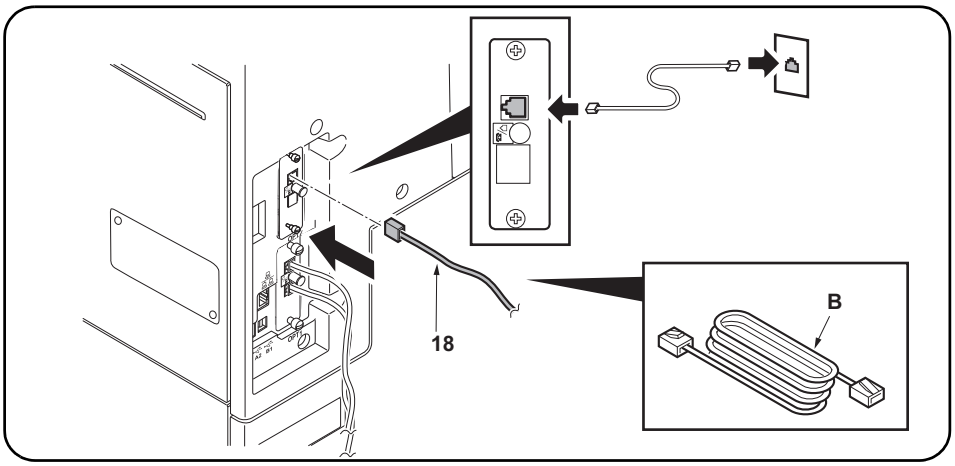

Connect the MFP to the telephone line.

5. Plug the modular connector cable (18) into the line terminal, and then connect the other end to the telephone line.
For 100 V/120 V/Australian or Chinese models, use the supplied modular connector cable (B).

Connecter le MFP à la ligne de téléphone.

5. Brancher le câble du connecteur modulaire (18) à la borne de la ligne, puis connecter l'autre extrémité à la ligne de téléphone.
Pour les modèles 100 V/120 V/Australie ou Chine, utilisez le câble à connecteur modulaire (B) fourni.

Conecte el MFP a la línea telefónica.

5. Enchufe el cable del conector modular (18) en el terminal de línea y, a continuación, conecte el otro extremo a la línea telefónica.
Para los modelos de 100 V/120 V/Australiano o Chino, utilice el cable conector modular (B) suministrado.

Anschließen des MFP an die Telefonleitung.

5. Telefonmodulkabel (18) in die Gerätebuchse einstecken und das Kabel an der Telefondose anschließen.
Das mitgelieferte Modularsteckerkabel (B) für die 100-V/120-V/Australien- oder China-Modelle verwenden.

Collegamento dell'MFP alla linea del telefono.

5. Inserire il cavo connettore modulare (18) nel terminale della linea, e quindi collegare l'altro terminale alla linea del telefono.
Per modelli da 100 V/120 V/Australia o Cina, utilizzare il cavo connettore modulare (B) in dotazione.

将 MFP 连接到电话线

5. 将模块接插件电缆 (18) 插入电话线端子，然后将另一端与电话线连接。
对于 100V/120V/ 澳大利亚或中国机型，请使用随附的模块接插件电缆 (B)。

전화회선과의 연결

5. 모듈러 코드 (18) 를 라인단자에 꽂습니다 . 다른 한 쪽의 플러그는 전화회선과 연결합니다 .
100V/120V/ 오스트레일리아 / 중국사양은 부속 모듈코드 (B) 를 사용할 것 .

電話回線との接続

5. モジュラーコード (18) をライン端子に差し込む。もう片方のプラグは、電話回線へ接続する。
100V/120V/ オーストラリア / 中国仕様は付属のモジュラーコード (B) を使用すること。

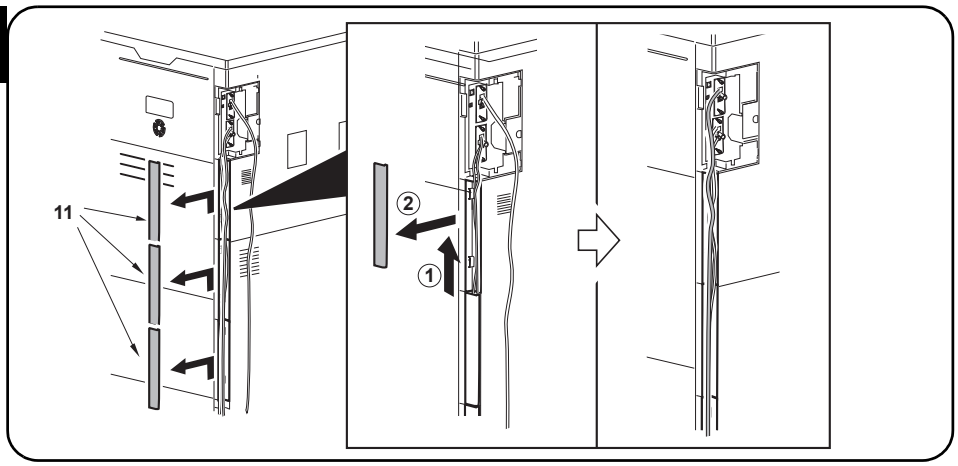

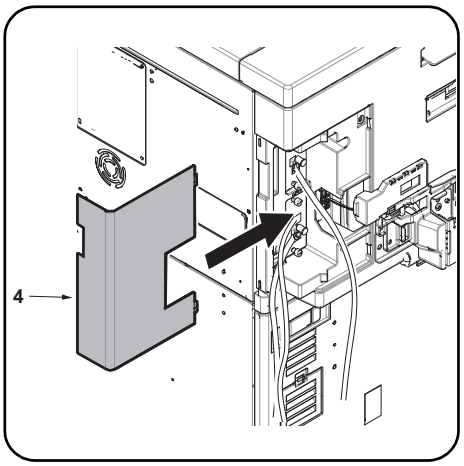

Wiring the modular connector cable (High-speed MFPs only)

6. Remove the covers (11) and run the modular connector cable as shown in the figure.
*Run it by binding with the modular cords from the Fax System (OPT1).

7. Reinstall the covers (11).

8. Install the cover (4) which was removed in step 1.
* For high-speed MFPs with/without the finisher and for medium-speed MFPs with the finisher installed.

Câblage du câble à connecteur modulaire (MFP à grande vitesse uniquement)

6. Déposer les couvercles (11) et implanter le câble à connecteur modulaire comme illustré par la figure.
*Le faire passer avec les cordons modulaires du fax (OPT1).

7. Reposer les couvercles (11).

8. Installer le cache (4) qui a été retiré à l'étape 1.
* Pour les imprimantes multifonction à grande vitesse avec/sans module de finition et pour les imprimantes multifonction à vitesse moyenne avec le module de finition installé.

Tendido del cable conector modular (Solo para las MFP de alta velocidad)

6. Quite las cubiertas (11) y tienda el cable conector modular como se muestra en la ilustración.
* Tiéndalo uniéndolo con los cables modulares del sistema de fax (OPT1).

7. Vuelva a instalar las cubiertas (11).

8. Instale la cubierta (4) que se quitó en el paso 1.
* Para los MFP de velocidad alta con/sin finalizador y para los MFP de velocidad media con el finalizador instalado.

Verlegung des Modularsteckerkabels (Nur MFP der Hochleistungsklasse)

6. Die Abdeckungen (11) entfernen und das Modularsteckerkabel gemäß der Abbildung verlegen.
*Führen Sie es zusammen mit dem Kabel des FAX-Systems (OPT1).

7. Die Abdeckungen (11) wieder anbringen.

8. Installieren Sie die Abdeckung (4), die in Schritt 1 entfernt wurde.
* Bei schnellen MFPs mit/ohne Finisher oder mittelschnellen MFPs mit installiertem Finisher.

Cablaggio del cavo connettore modulare (Solo per MFP a velocità alta)

6. Rimuovere i coperchi (11) e far passare il cavo connettore modulare come indicato nella figura.
*Infilarlo collegandolo ai cavi modulari del modulo fax (OPT1).

7. Reinstallare i coperchi (11).

8. Installare il coperchio (4) rimosso al punto 1.
* Per dispositivi MFP di fascia alta con/senza finisher e per dispositivi di fascia media con finisher installato.

电话线的配线（仅限高速 MFP 时）

6. 拆下盖板（11），将电话线如图所示穿过。
※ 将传真系统（OPT1）的连接线整理成束。

7. 安装盖板（11）。

8. 安装在步骤 1 中取下的盖板（4）。
※ 对于高速机来说装订器可装可不装，对于中速机来说要安装。

모듈러 코드의 배선 (고속 MFP 의 경우만)

6. 커버 (11) 를 떼어 내고 모듈러 코드를 그림과 같이 지나가게 합니다 .
※ 팩스 시스템 (OPT1) 의 모듈러 코드와 묶어서 실행합니다 .

7. 커버 (11) 을 장착합니다 .

8. 1 단계에서 분리한 커버 (4) 를 설치합니다 .
※ 피니셔 장착 및 비장착의 고속 MFP 및 피니셔 장착 중속 MFP.

モジュラーコードの配線（高速 MFP の場合のみ）

6. カバー(11)を取り外し、モジュラーコードを図のように通す。
※ ファクスシステム（OPT1）のモジュラーコードと束ねて通す。

7. カバー(11)を取り付ける。

8. 手順 1 で取り外したカバー(4)を取り付ける。
※ 高速 MFP の場合および中速 MFP にフィニッシャー装着時の場合。

Initialize the FAX circuit board.

1. Plug the MFP into a power outlet, and turn on the main power.
2. If the FAX PWBs were installed simultaneously to OPT1 and OPT2 (all Fax PWBs are initialized), perform the maintenance mode U600 to initialize the FAX PWBs.
3. If the FAX circuit board has been added to OPT2 (to initialize the FAX circuit board in OPT2)
   Initialize OPT2 by pressing [PORT2], and the Start key in this order in the maintenance mode U698 and executing the maintenance mode U600. If [ALL] is selected in U698, both OPT1 and OPT2 are initialized.
   For details, see the service manual.

Initialiser la carte à circuits FAX.

1. Brancher le MFP sur une prise d'alimentation et le mettre sous tension.
2. Si les cartes de circuit imprimé du fax ont été installées en même temps que OPT1 et OPT2 (toutes les cartes de circuit imprimé du fax sont initialisées), exécuter le mode maintenance U600 pour initialiser les cartes de circuit imprimé du fax.
3. Si la carte à circuits FAX a été ajoutée à l'OPT2 (pour initialiser la carte à circuits FAX dans l'OPT2)
   Initialiser l'OPT2 en appuyant sur [PORT2] et la touche Départ dans cet ordre en mode de maintenance U698, et exécuter le mode de maintenance U600. Si [ALL] est sélectionné dans U698, l'OPT1 et l'OPT2 sont tous deux initialisés. Pour plus de détails, se reporter au manuel d'entretien.

Inicialice la tarjeta de circuitos FAX.

1. Conecte el MFP a un receptáculo de pared y encienda el interruptor principal.
2. Si se instalaron FAX PWB simultáneamente a OPT1 y OPT2 (se inicializan todos los FAX PWB), ejecute el modo de mantenimiento U600 para inicializar los FAX PWB.
3. Si la tarjeta de circuitos de FAX se agregó a OPT2 (para inicializar la tarjeta de circuitos de FAX en OPT2)
   Inicialice el OPT2 presionando [PORT2] y la tecla de Inicio en ese orden en el modo de mantenimiento U698 y ejecutando el modo de mantenimiento U600. Si se selecciona [ALL] en U698, se inicializan ambos OPT1 y OPT2. Para más detalles, lea el manual de servicio.

Initialisieren der FAX-Leiterplatte.

1. Netzstecker des MFP in eine Steckdose stecken und Hauptschalter einschalten.
2. Falls die FAX-Karten gleichzeitig in OPT1 und OPT2 installiert werden (alle FAX-Karten werden initialisiert), führen Sie den Wartungsmodus U600 aus, um die FAX-Karten zu initialisieren.
3. Wenn die FAX-Leiterplatte zu OPT2 hinzugefügt worden ist (um die FAX-Leiterplatte in OPT2 zu in7itialisieren)
   OPT2 initialisieren. Dazu [PORT2] und die Start-Taste im Wartungsmodus U698 in dieser Reihenfolge drücken und den Wartungsmodus U600 ausführen. Wenn [ALL] in U698 gewählt wird, werden OPT1 und OPT2 initialisiert. Weitere Einzelheiten siehe Wartungsanleitung.

Inizializzare la scheda a circuiti FAX.

1. Collegare l'MFP ad una presa di corrente e portare l'interruttore principale su On.
2. Se sono state installate simultaneamente le schede FAX PWB su OPT1 e OPT2 (tutte le schede FAX PWB sono inizializzate), eseguire il modo manutenzione U600 per inizializzare le schede FAX PWB.
3. Se la scheda a circuiti è stata aggiunta all'OPT2 (per inzializzare la scheda a circuiti FAX nell'OPT2)
   Inizializzare OPT2 premendo [PORT2] e il tasto Avvio in questo ordine nel modo di manutenzione U698 ed eseguendo il modo di manutenzione U600. Se viene selezionato [ALL] nel modo U698, entrambi OPT1 e OPT2 sono inizializzati. Per ulteriori dettagli leggere il manuale d'istruzioni.

传真电话板的初始化

1. 将 MFP 的电源插头插入电源插座，打开主电源。
2. 当把传真电路板同时安装到 OPT1 和 OPT2 时（全部的传真电路板初始化），执行维修保养模式 U600，初始化传真电路板。
3. 在 OPT2 上增设时
   (OPT2 的传真电路板初始化)
   只进行 OPT2 初始化时，在维修保养模式 U698 状态下，按顺序按下 “PORT2”、开始键，执行维修保养模式 U600。
   在 U698 状态下设定 “ALL” 时，会使 OPT1 和 OPT2 均初始化。
   有关详信息，请参见维修手册。

FAX 회로기판의 초기화

1. MFP 본체 전원플러그를 콘센트에 꼽고 주 전원 스위치를 ON 으로 한다 .
2. OPT1 과 OPT2 에 FAX 회로기판을 동시에 설치한 경우 (모든 FAX 회로기판이 초기화됨), 메인터넌스 모드 U600 을 수행하여 FAX 회로기판을 초기화합니다 .
3. OPT2 에 증설한 경우 (OPT2 의 FAX 기판을 초기화)
   메인터넌스모드 U698 에서 「PORT2」, 시작키 순으로 누릅니다 . 메인터넌스 모드 U600 을 실행하고 FAX 회로기판을 초기화합니다 .
   U698 에서 「ALL」을 설정하면 OPT1 과 OPT2 양쪽을 초기화하기 때문에 주의할 것 .
   상세는 서비스 매뉴얼을 참조할 것 .

FAX 基板の初期化

1. MFP 本体の電源プラグをコンセントに差し込み、主電源スイッチを ON にする。
2. OPT1 と OPT2 に FAX 基板を同時に設置した場合 (すべての FAX 基板を初期化) メンテナンスモード U600 を実行し、FAX 基板を初期化する。
3. OPT2 に増設した場合 (OPT2 の FAX 基板を初期化)
   メンテナンスモード U698 で「PORT2」、スタートキーの順に押す。メンテナンスモード U600 を実行し、FAX 基板を初期化する。
   U698 で「ALL」を設定すると OPT1 と OPT2 両方を初期化するので注意すること。詳細はサービスマニュアルを参照のこと。

B

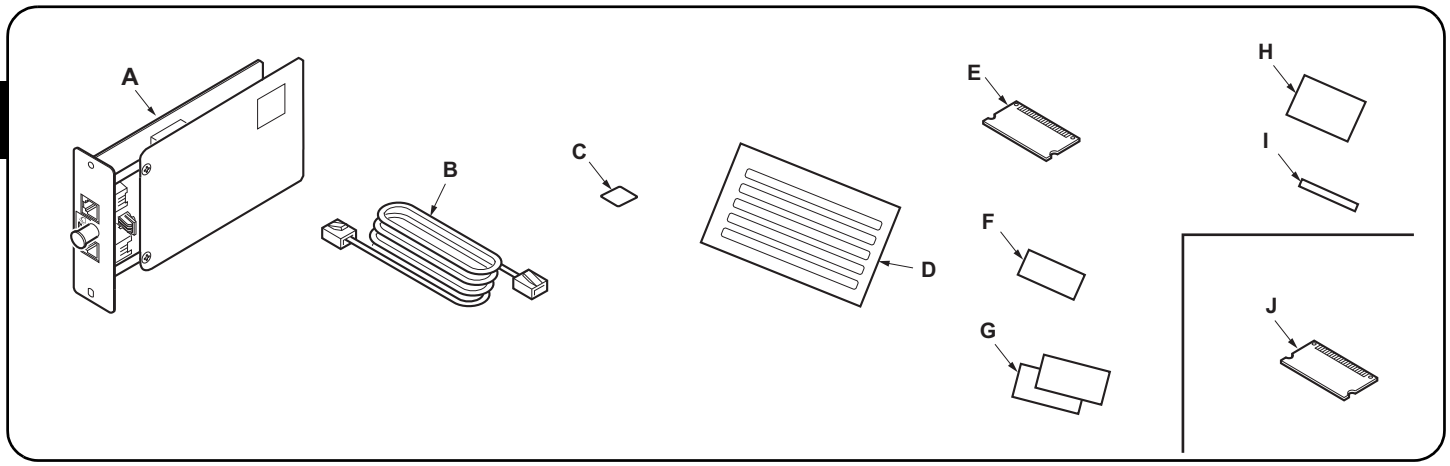

When installing the Fax system on a machine (B) which has the 'Accessibility Display' key in the operation panel

Supplied parts

A. FAX circuit board 1
B. Modular connector cable (120 V/Australian model only) PJJWC0016Z (UL Listed.HUAN HSIN Type TL:120 V only) 1
C. Terminal seal..... 1
D. Alphabet label..... 1
E. Memory DIMM (16 MB) 1
F. PTT label (110V model only) 1
G. Approval label (Australian/New Zealand models only)..... 2

Option

J. Memory DIMM (128 MB) 1

(H) and (I) are not supplied.

Be sure to remove any tape and/or cushioning materials from the parts supplied.

Lors de l'installation du fax sur une machine (B) disposant de la touche 'Affich. accessibilité' sur le panneau de commande

Pièces fournies

A. Carte à circuits FAX..... 1
B. Câble du connecteur modulaire (modèles pour l'Australie/120 V seulement)..... 1
C. Joint de borne..... 1
D. Etiquette de l'alphabet..... 1
E. Mémoire DIMM (16 MB) 1

Option

J. Mémoire DIMM (128 MB) 1

(F),(G),(H) et (I) ne sont pas fournis.

Veillez à retirer les morceaux de bande adhésive et/ou les matériaux de rembourrage des pièces fournies.

Al instalar el sistema de fax en una máquina (B) que dispone de la tecla 'Pantalla acceso' en el panel de controles

Partes suministradas

A. Tarjeta de circuitos de fax..... 1
B. Cable conector modular (sólo para modelos de 120 V/Australianos)..... 1
C. Sello del terminal..... 1
D. Etiqueta de alfabeto..... 1
E. Memoria DIMM (16 MB) 1

Opción

J. Memoria DIMM (128 MB) 1

(F) ,(G) ,(H) y (I) no se suministran.

Asegúrese de quitar todas las cintas y/o material amortiguador de las partes suministradas.

Bei Installation des FAX-Systems in einem Gerät (B), das über die Taste 'Zugriffsanzeige' im Bedienfeld verfügt

Enthaltene Teile

A. FAX-Leiterplatte..... 1
C. Verschlusskappe 1
D. Alphabetaufkleber..... 1
E. Speicher-DIMM (16 MB) 1

Option

J. Speicher-DIMM (128 MB) 1

(B), (F), (G) , (H) und (I) liegen nicht bei.

Stellen Sie sicher, dass sämtliche Klebebänder und/oder Polstermaterial von den gelieferten Teilen entfernt wurden.

Per l'installazione del modulo FAX su una macchina (B) dotata di tasto 'Visual. Accessibilità' sul pannello comandi

Parti fornite

A. Scheda a circuiti FAX 1
C. Guarnizione terminale 1
D. Etichetta alfabetica 1
E. Memoria DIMM (16 MB) 1

Opzioni

J. Memoria DIMM (128 MB) 1

(B), (F), (G), (H) e (I) non sono in dotazione.

Rimuovere tutti i nastri adesivi e/o i materiali di protezione dalle parti fornite.

当安装传真系统到那些操作面板上有 ' 扩大显示 ' 按键的机器 (B) 时

附属品

A. 传真电路板..... 1
B. 电话线..... 1
C. 端子密封..... 1
D. 英文字母标签..... 1
E. 内存模组 DIMM (16MB) 1
F. 规格标签 1
H. 贴片 1
I. 名称标签 1

选购件

J. 内存模组 DIMM (128MB) 1

(G) 并非附属品。
不使用 (I)。

如果附属品上带有固定胶带，缓冲材料时务必揭下。

조작판넬에 ' 유니버셜 ' 키가 있는 본체 (B) 에 팩스 시스템을 설치하는 경우

동봉품

A. FAX 기판 1
C. 단자씰.....1
D. 알파벳 라벨.....1
E. 메모리 DIMM (16MB) 1

옵션

J. 메모리 DIMM (128MB) 1

(B),(F),(G),(H),(I) 는 동봉되어 있지 않습니다 .

동봉품에 고정 테이프 , 완충재가 붙어 있는 경우에는 반드시 제거하십시오 .

操作パネルに ‘ ユニバーサル ’ キーがある機械 (B) にファクスシステムを設置する場合

同梱品

A. FAX 基板 1
B. モジュラーコード..... 1
C. 端子シール..... 1
E. メモリーDIMM(16MB)..... 1

オプション

J. メモリーDIMM(128MB) 1

(D),(F),(G),(H),(I) は、同梱されていない。

同梱品に固定テープ、緩衝材がついている場合は、必ず取り外すこと。

NOTICE
If the finisher is already installed, remove the finisher before installing FAX System(W).
Before starting installation, be sure to turn the main power switch of the machine off, and unplug the power plug from the wall outlet.

REMARQUE
Si le retoucheur est déjà en place, le déposer avant de monter le FAX System(W).
Avant de commencer l'installation, s'assurer de mettre la machine hors tension et de débrancher la fiche d'alimentation de la prise murale.

AVISO
Si el finalizador ya se encuentra instalado, desmóntelo antes de instalar el FAX System(W).
Antes de iniciar la instalación, asegúrese de apagar el interruptor de encendido de la máquina y desenchufar el cable de alimentación de la toma de pared.

ANMERKUNG
Falls der Finisher schon installiert ist, müssen Sie ihn ausbauen, bevor Sie das FAX System(W) installieren.
Bevor Sie mit der Installation beginnen überzeugen Sie sich, dass der Netzschalter des Geräts ausgeschaltet und das Stromkabel aus der Steckdose gezogen ist.

AVVISO
Se la finitrice è già installata, rimuovere la finitrice prima di installare il FAX System(W).
Prima di iniziare l'installazione, spegnere la macchina e scollegare la spina dalla presa di corrente.

注意
已安装装订器时，必须先拆下装订器再安装 FAX System(W)。
安装前务必关闭机器的主电源开关，并从墙壁插座拔下电源插头。

주의
피니셔가 이미 장착되어 있는 경우에는 피니셔를 제거하고 FAX System(W) 를 설치할 것 .
설치를 시작하기 전에 반드시 본체의 주 전원 스위치를 끄고 벽 콘센트에서 전원 플러그를 분리하십시오 .

注意
フィニッシャーがすでに装着されている場合は、フィニッシャーを取り外してから、FAX System(W) を取り付けること。
必ず機械本体の主電源スイッチを OFF にし、機械本体の電源プラグを抜いてから作業すること。

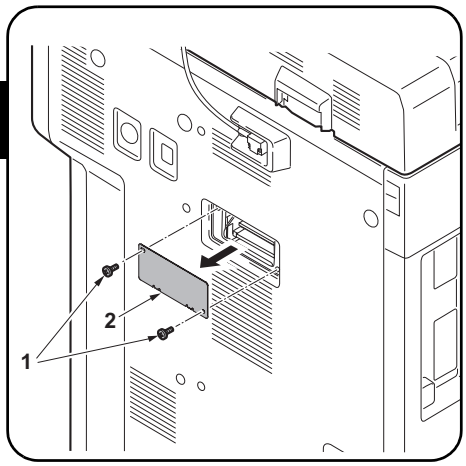

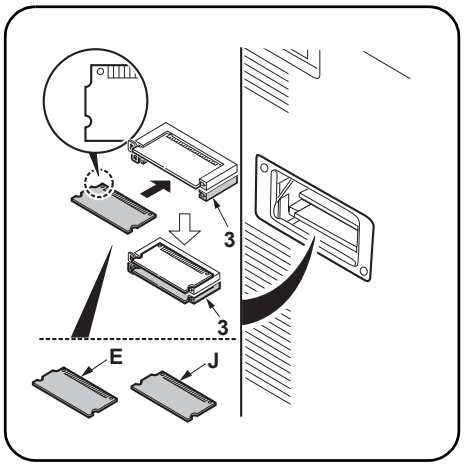

Procedure
Installing the memory DIMM

1. Remove 2 screws (1), and then remove the cover (2).

2. Install the memory DIMM (E) or the optional memory DIMM (J) into the memory slot (3) on the lower level (FLS).
Install it with the IC side facing down.
Insert it in the direction of the arrow until it clicks.

3. Reinstall the cover (2) using the 2 screws (1).

Procédure
Installation de la mémoire DIMM

1. Déposer les 2 vis (1) puis enlevez le couvercle (2).

2. Installer la mémoire DIMM (E) ou la mémoire DIMM en option (J) dans la fente mémoire (3) se trouvant au niveau inférieur (FLS).
L'installer avec le côté IC en bas.
L'insérer dans la direction de la flèche jusqu'au clic.

3. Reposez le couvercle (2) à l'aide des 2 vis (1).

Procedimiento
Instalación de la memoria DIMM

1. Quite 2 tornillos (1) y, después, desmonte la cubierta (2).

2. Instale la memoria DIMM (E), o la memoria DIMM opcional (J), en la ranura para memoria (3) en el nivel inferior (FLS).
Instálelo con el lado IC hacia abajo.
Insértela en la dirección que indica la flecha hasta que escuche un clic.

3. Vuelva a colocar la cubierta (2) utilizando los 2 tornillos (1).

Vorgehensweise
Installation der DIMM-Speichermodule

1. Entfernen Sie 2 Schrauben (1) und nehmen Sie dann die Abdeckung (2) ab.

2. Setzen Sie das DIMM-Speichermodul (E) oder das optionale DIMM-Speichermodul (J) in die untere Position (FLS) der Speicherbank (3) ein.
Mit der IC-Seite nach unten weisend installieren.
Schieben Sie das Modul in Pfeilrichtung, bis es hörbar einrastet.

3. Setzen Sie die Abdeckung (2) wieder mit den 2 Schrauben (1) an.

Procedura
Installazione della memoria DIMM

1. Rimuovere 2 viti (1), e quindi rimuovere il coperchio (2).

2. Installare la memoria DIMM (E) o la memoria DIMM opzionale (J) nello slot della memoria (3) al livello inferiore (FLS).
Installare con il lato IC rivolto verso il basso.
Inserirla nella direzione della freccia finché non scatta in posizione.

3. Reinstallare il coperchio (2) utilizzando le 2 viti (1).

安装步骤
安装内存模组 DIMM

1. 取下 2 个螺丝 (1)，然后取下盖板 (2)。

2. 将内存模组 DIMM (E) 或选购件内存模组 DIMM (J) 安装至下层 (FLS) 的内存插槽 (3)。
安装时，将 IC 侧正面朝下。
沿箭头方向将其插入到底直至发出喀嗒声。

3. 使用 2 个螺丝 (1) 重新安装盖板 (2)。

설치순서
메모리 DIMM 설치

1. 나사 (1) 2 개를 제거하고 커버 (2) 를 제거합니다 .

2. 메모리 DIMM (E) 또는 옵션 메모리 DIMM(J) 를 하단 (FLS) 의 메모리 슬롯 (3) 에 장착합니다 .
IC 면을 밑으로 할 것 .
딸칵하고 소리가 날 때까지 화살표 방향으로 삽입합니다 .

3. 나사 (1) 2 개로 커버 (2) 를 원래대로 장착합니다 .

取付手順
メモリーDIMM の取り付け

1. ビス (1)2 本を外し、カバー(2) を取り外す。

2. メモリーDIMM(E)または、オプションのメモリーDIMM(J) を下段 (FLS) のメモリースロット (3) に取り付ける。
IC 面を下向きに取り付けること。
カチッと音がするまで矢印方向に挿入する。

3. ビス (1)2 本で、カバー(2) を元通り取り付ける。

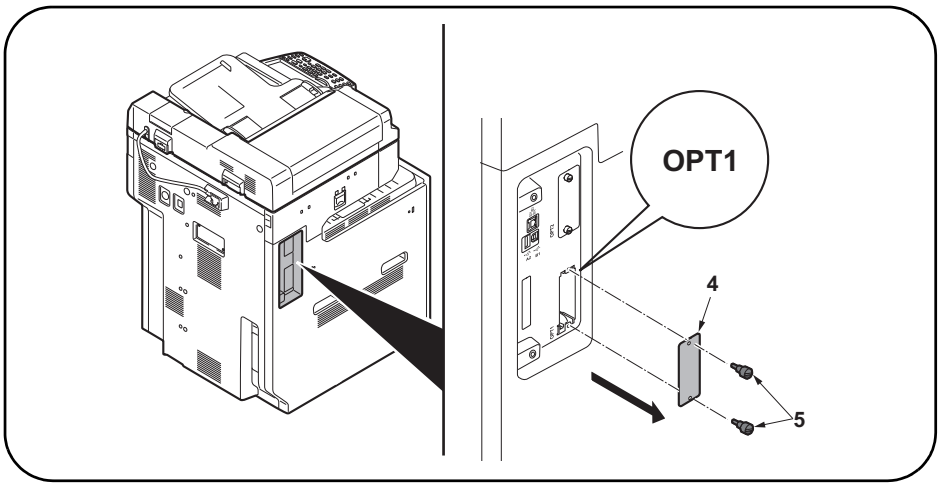

Removing the slot cover

4. Remove 2 screws (5) and then remove the OPT1 slot cover (4).
* Do not use OPT2.

Dépose du couvercle de la fente

4. Déposer les 2 vis (5) puis le couvercle de la fente OPT1 (4).
* Ne pas utiliser OPT2.

Desmontaje de la cubierta de la ranura

4. Quite 2 tornillos (5) y, después, quite la cubierta de la ranura OPT1 (4).
* No utilice OPT2.

Entfernen der Einschubabdeckung

4. 2 Schrauben (5) entfernen und dann die Abdeckung (4) des Einschubs OPT1 entfernen.
* OPT2 nicht verrwenden.

Rimozione del coperchio vano

4. Rimuovere le 2 viti (5) e quinidi rimuovere il coperchio (4) del vano OPT1.
* Non utilizzare OPT2.

拆下插槽盖板

4. 拆除 2 颗螺丝 (5)，拆下 OPT1 的插槽盖板 (4)。
※ 不使用 OPT2。

슬롯커버 제거

4. 나사 (5) 2 개를 제거하고 OPT1 의 슬롯커버 (4) 를 제거합니다 .
※ OPT2 는 사용하지 말 것 .

スロットカバーの取り外し

4. ビス (5)2 本を外し、OPT1 のスロットカバー(4) を取り外す。
※OPT2 は使用しないこと。

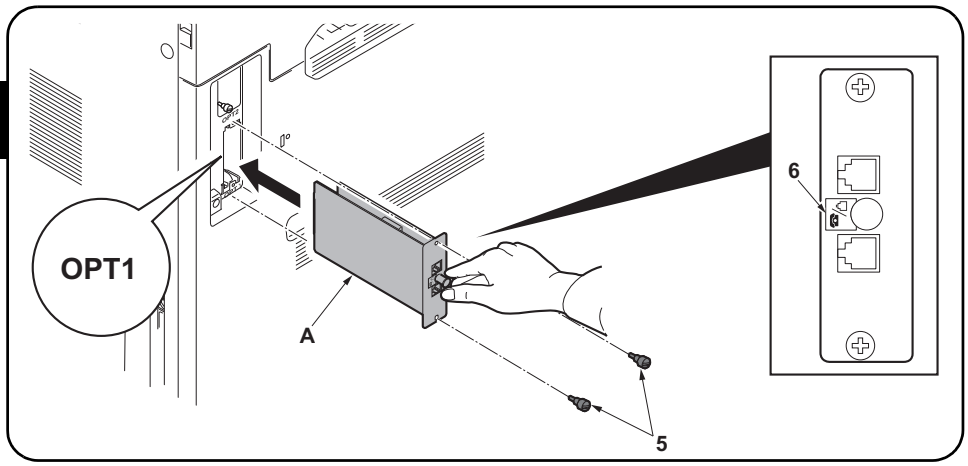

Install the FAX circuit board.

5. Insert the FAX circuit board (A) along the groove in OPT1 and secure the board with two screws (5) that have been removed in step 4.
Do not directly touch the FAX circuit board (A) terminal. Hold the top and bottom of the FAX circuit board, or the projection of the board to insert the FAX circuit board (A).
Direct the label (6) on to the FAX circuit board (A) as indicated in the illustration and insert the board along the groove.

Installer la carte à circuits FAX.

5. Insérer la carte à circuits FAX (A) le long de la rainure dans l'OPT1 et la fixer à l'aide des deux vis (5) retirées à l'étape 4.
Ne pas toucher directement la borne de la carte à circuits FAX (A). Tenir les parties inférieure et supérieure de la carte à circuits FAX ou la saillie de la carte pour insérer la carte à circuits FAX (A).Orienter l'étiquette (6) de la carte à circuits FAX (A) comme illustré et insérer la plaquette le long de la rainure.

Instale la tarjeta de circuitos de fax.

5. Inserte la tarjeta de circuitos de fax (A) a lo largo de la ranura de OPT1 y asegúrela con los dos tornillos (5) que ha quitado en el paso 4.
No toque directamente el terminal de la tarjeta de circuitos del fax (A). Sujete las partes superior e inferior de la tarjeta de circuitos de fax o la saliente de la tarjeta para insertar la tarjeta de circuitos de fax (A).Oriente la etiqueta (6) en la tarjeta de circuitos del FAX (A) como se indica en la ilustración e inserte la tarjeta a lo largo de la ranura.

Installieren der FAX-Leiterplatte.

5. FAX-Leiterplatte (A) in die Nut des Einbauschachts OPT1 einsetzen und Leiterplatte mit den in Schritt 4 ausgebauten Schrauben (5) befestigen.
Berühren Sie die Anschlüsse der FAX-Platine (A) nicht mit den Fingern. Die FAX-Leiterplatte (A) bein Einsetzen oben und unten oder an dem Vorsprung festhalten.
Die FAX-Leiterplatte (A) so in die Nut einsetzen, dass der Aufkleber (6) wie abgebildet zur Leiterplatte zeigt.

Installare la scheda a circuiti FAX.

5. Inserire la scheda a circuiti FAX (A) lungo l'incavo nell'OPT1 e fissare la scheda con le due viti (5) rimosse nell'operazione 4.
Non toccare direttamente il terminale della scheda a circuiti FAX (A). Per inserire il circuito FAX (A), tenere l'estremit superiore e la base della scheda a circuiti FAX, o la sporgenza della scheda a circuiti FAX. Orientare l'etichetta (6) sulla scheda a circuiti FAX (A) come indicato nell'illustrazione e inserire la scheda lungo l'incavo.

安装传真电路板

5. 沿着 OPT1 的沟槽插入传真电路板 (A) 并用在步骤 4 中拆下的两颗螺钉 (5) 固定电路板。
请勿直接触摸传真电路板 (A) 端子。
按住传真电路板的顶部和底部，或者按住电路板的突出部将传真电路板 (A) 插入。
将传真电路板 (A) 上的标签 (6) 保持图示中的方向，将电路板沿着沟槽方向插入。

FAX 회로기판 장착

5. OPT1 의 홈을 따라 FAX 회로기판 (A) 를 삽입하고 앞 순서 4 에서 제거한 나사 (5) 2 개로 고정합니다 .
FAX 회로기판 (A) 의 단자에 직접 닿지 않도록 할 것 .
FAX 회로기판 (A) 삽입 시 , 회로기판의 상하 또는 돌출부를 잡을 것 .
FAX 회로기판 (A) 를 부착된 라벨 (6) 그림 표기 방향으로 삽입할 것 .

FAX 基板の取り付け

5. OPT1 の溝に沿って FAX 基板 (A) を挿入し、手順 4 で外したビス (5)2 本で固定する。
FAX 基板 (A) の端子に直接触れないこと。
FAX 基板 (A) の挿入時は基板の上下か突起を持つこと。
FAX 基板 (A) は、貼り付けられているラベル (6) が図に示す方向になるように、挿入すること。

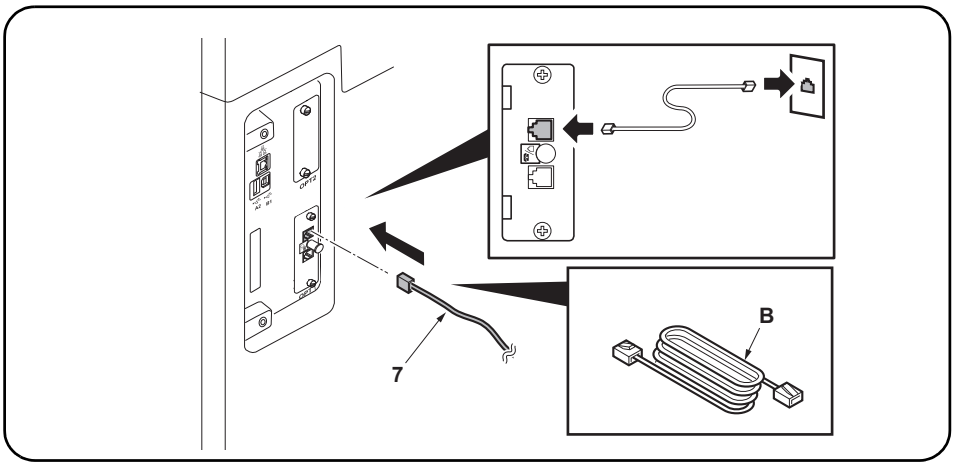

Connect the MFP to the telephone line.

6. Plug the modular connector cable (7) into the line terminal, and then connect the other end to the telephone line.

For 100 V/120 V/Australian or Chinese models, use the supplied modular connector cable (B).

Connecter le MFP à la ligne de téléphone.

6. Brancher le câble du connecteur modulaire (7) à la borne de la ligne, puis connecter l'autre extrémité à la ligne de téléphone.

Pour les modèles 100 V/120 V/Australie ou Chine, utilisez le câble à connecteur modulaire (B) fourni.

Conecte el MFP a la línea telefónica.

6. Enchufe el cable del conector modular (7) en el terminal de línea y, a continuación, conecte el otro extremo a la línea telefónica.

Para los modelos de 100 V/120 V/Australiano o Chino, utilice el cable conector modular (B) suministrado.

Anschließen des MFP an die Telefonleitung.

6. Telefonmodulkabel (7) in die Gerätebuchse einstecken und das Kabel an der Telefondose anschließen.

Das mitgelieferte Modularsteckerkabel (B) für die 100-V/120-V/Australien- oder China-Modelle verwenden.

Collegamento dell'MFP alla linea del telefono.

6. Inserire il cavo connettore modulare (7) nel terminale della linea, e quindi collegare l'altro terminale alla linea del telefono.

Per modelli da 100 V/120 V/Australia o Cina, utilizzare il cavo connettore modulare (B) in dotazione.

将 MFP 连接到电话线

6. 将模块接插件电缆 (7) 插入电话线端子，然后将另一端与电话线连接。

对于 100V/120V/ 澳大利亚或中国机型，请使用随附的模块接插件电缆 (B)。

전화회선 연결

6. 모듈 코드 (7) 을 라인단자에 꽂습니다 . 다른 한 쪽의 플러그는 전화회선과 연결합니다 .

100V/120V/ 오스트레일리아 / 중국사양은 부속 모듈러 코드 (B) 를 사용할 것 .

電話回線との接続

6. モジュラーコード (7) をライン端子に差し込む。もう片方のプラグは、電話回線へ接続する。

100V/120V/ オーストラリア / 中国仕様は付属のモジュラーコード (B) を使用すること。

B

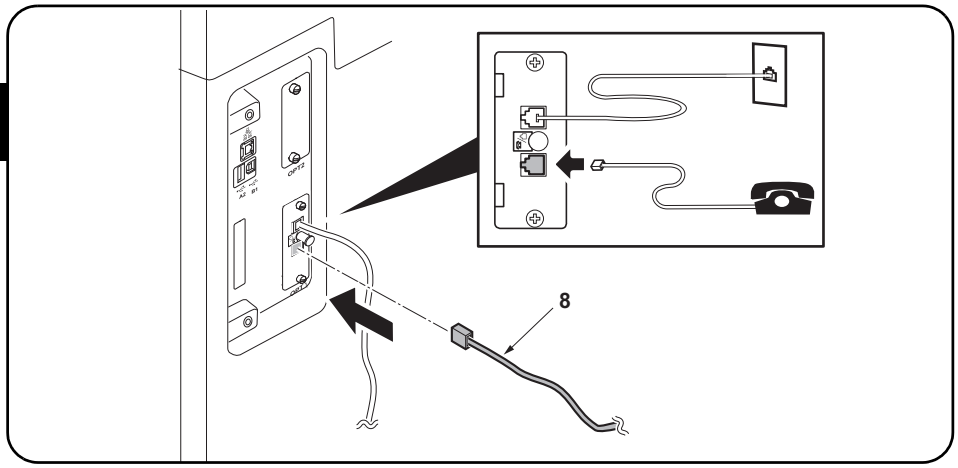

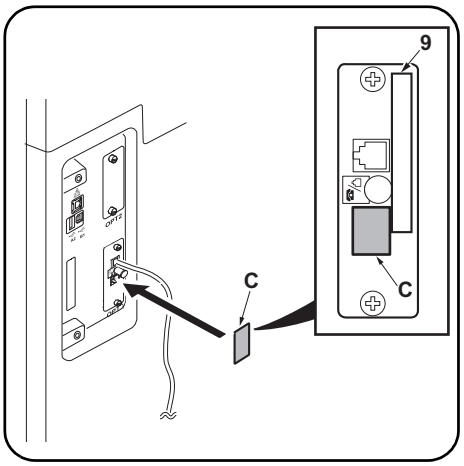

Connect the MFP to the separate phone).

7. Plug the modular connector cable (8) into the telephone terminal, and then connect the other end to the separate phone.

If you don't connect the MFP to the separate phone, wipe the surface of the telephone terminal with alcohol and adhere the terminal seal (C) upon the customer's request.
On 120 V models, be sure that it is not attached over the top of the approval label (9).

Connecter le MFP au téléphone séparé.

7. Brancher le câble du connecteur modulaire (8) à la borne du téléphone, puis connecter l'autre extrémité au téléphone séparé.

Si le MFP n'est pas connecté au téléphone séparé à la demande du client, nettoyer la surface de la borne de téléphone avec de l'alcool et apposer le joint de borne (C).
Sur les modèles 120 V, attention à ne pas installer en recouvrant le haut de l'étiquette d'approbation (9).

Conecte el MFP al teléfono separado.

7. Enchufe el cable del conector modular (8) en el terminal del teléfono y, a continuación, conecte el otro extremo al teléfono separado.

Si no conecta el MFP a un teléfono separado, limpie la superficie del terminal del teléfono con alcohol y pegue el sello del terminal (C), a solicitud del cliente.
En los modelos de 120 V, asegúrese de que no se fije sobre la etiqueta de aprobación (9).

Anschließen des MFP an das separate Telefon.

7. Das Telefonmodulkabel (8) in die Telefonbuchse einstecken und das andere Ende an das separate Telefon anschließen.

Wenn der MFP nicht an das separate Telefon angeschlossen wird, die Oberfläche der Telefonbuchse mit Alkohol abwischen und Verschlusskappe (C) einsetzen, falls vom Kunden gewünscht.
Bei 120-V-Modellen darauf achten, dass der Aufkleber nicht den Genehmigungsaufkleber (9) verdeckt.

Collegamento dell'MFP al telefono separato.

7. Inserire il cavo connettore modulare (8) nel terminale del telefono, e quindi collegare l'altro terminale al telefono separato.

Nel caso in cui non si colleghi l'MFP al telefono separato, pulire la superficie del terminale del telefono con dell'alcol e applicare la guarnizione terminale (C) a richiesta del cliente.
Sui modelli da 120 V, assicurarsi che essa non venga applicata sopra l'etichetta di approvazione (9).

将 MFP 连接到其它电话

7. 将模块接插件电缆 (8) 插入电话端子，然后将另一端与其他电话连接。

如果您没有将 MFP 连接至其他电话，请用酒精擦拭电话端子表面，并按照客户要求粘上端子密封 (C)。
120V 规格在粘贴时注意不要与认可标签 (9) 重叠。

외부 전화와 연결

7. 모듈코드 (8) 를 TEL 단자에 꽂습니다 . 다른 한 쪽의 플러그는 외부 전화와 연결합니다 .

외부 전화와 연결하지 않는 경우 고객의 요청에 따라 TEL 단자 주위를 알코올 청소하고 단자씰 (C) 을 붙입니다 .
120V 사양은 허가 라벨 (9) 에 겹치지 않도록 붙일 것 .

外付け電話との接続

7. モジュラーコード (8) を TEL 端子に差し込む。もう片方のプラグは、外付け電話と接続する。

外付け電話と接続しない場合、お客様の要望により、TEL 端子周囲をアルコール清掃し、端子シール (C) を貼り付ける。
120V 仕様は認可ラベル (9) に重ならないように、貼りつけること。

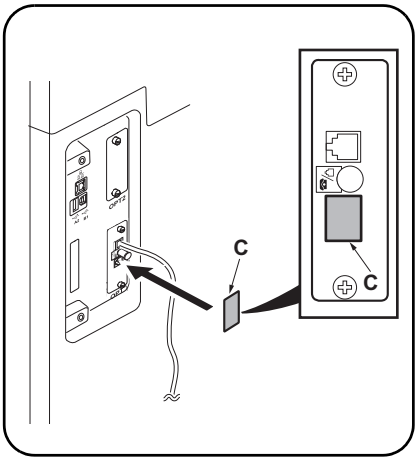

Seal the terminal
(for New Zealand model)

8. Wipe the surface of the telephone terminal with alcohol and adhere the terminal seal (C).
Perform this procedure for New Zealand model only.

Fermer hermétiquement la borne
(modèle pour la Nouvelle-Zélande)

8. Cette étape est superflue.

Selle el terminal
(para el modelo Nuevo Zelandés)

8. Este paso no es necesario.

Versiegeln der Anschlussbuchse
(für Neuseeland-Modell)

8. Dieser Schritt ist nicht erforderlich.

Sigillare il terminale
(per il modello Nuova Zelanda)

8. Questo passo non è richiesto.

安装端子密封（仅适用于新西兰型号）

8. 不需要本步骤。

단자씰의 부착 (뉴질랜드 사양만)

8. 이 단계가 필요하지 않습니다 .

端子シールの貼り付け
（ニュージーランド仕様のみ）

8. この作業は不要。

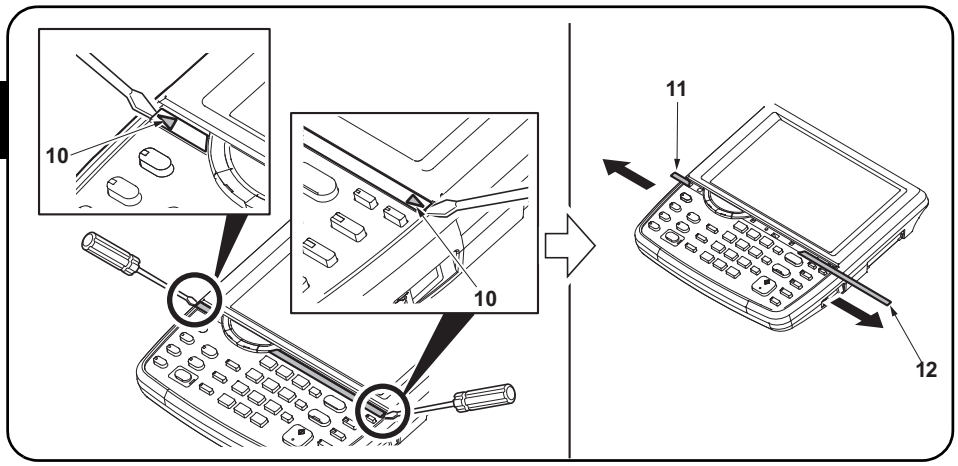

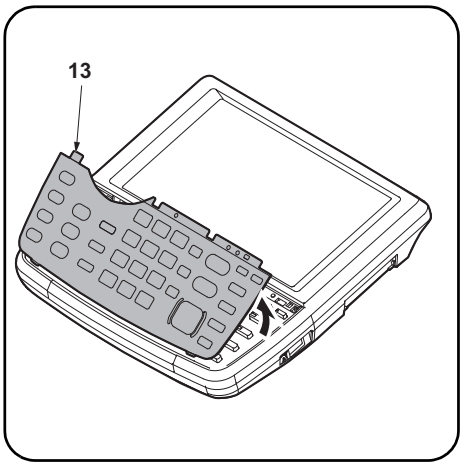

Attach the alphabet labels (excluding 100 V models).

9. Insert a flat-head screwdriver at the tip indicated by the arrows (10) as shown on the left, and slide the operation panel covers (11) (12) to remove them.

10. Remove the clear panel (13).

Apposer les étiquettes de l'alphabet (Sauf sur les modèles 100 V).

9. Insérer un tournevis à lame à l'endroit repéré par les flèches (10) comme illustré ci-contre à gauche et faire glisser les couvercles du panneau de commande (11) (12) pour les déposer.

10. Déposer le panneau transparent (13).

Fije las etiquetas de alfabeto (a excepción de los modelos de 100 V).

9. Inserte un destornillador de pala plana en la punta que indican las flechas (10) como se muestra a la izquierda y deslice las cubiertas del panel de trabajo (11) (12) para quitarlas.

10. Quite el panel transparente (13).

Anbringen der Alphabetaufkleber (ausgenommen 100-V-Modelle).

9. Einen flachen Schraubendreher an der links mit Pfeilen (10) bezeichneten Spitze einschieben und die Bedienfeldabdeckungen (11) (12) verschieben, um sie dann abzunehmen.

10. Die durchsichtige Platte (13) entfernen.

Applicare le etichette alfabetiche (esclusi i modelli da 100 V).

9. Inserire un cacciavite a testa piana nel punto indicato dalla freccia (10) come mostrato sulla sinistra, e slittare i coperchi (11) (12) del pannello operativo per rimuoverli.

10. Rimuovere il pannello trasparente (13).

粘贴英文字母标签（100V 规格以外）

9. 如图所示，在▲箭头（10）前方插入一字螺丝刀，滑动并取下操作面板的盖板（11）（12）。

10. 拆下透明面板（13）。

알파벳 라벨의 부착 (100V 사양 이외)

9. 그림과 같이 ▲ 표시 (10) 앞에 일자 드라이버를 삽입해 조작 판넬의 커버 (11) (12) 를 밀면서 떼어 냅니다 .

10. 클리어 판넬 (13) 을 제거합니다 .

アルファベットラベルの貼り付け（100V 仕様以外）

9. この作業は不要。

10. この作業は不要。

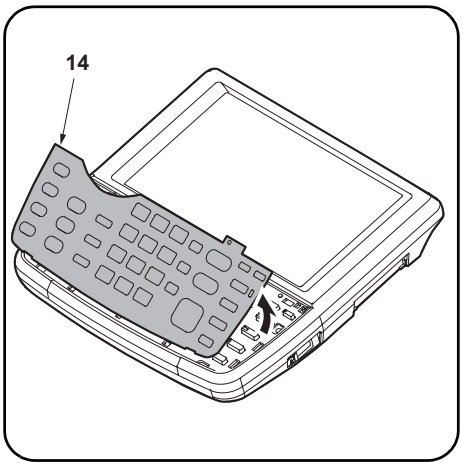

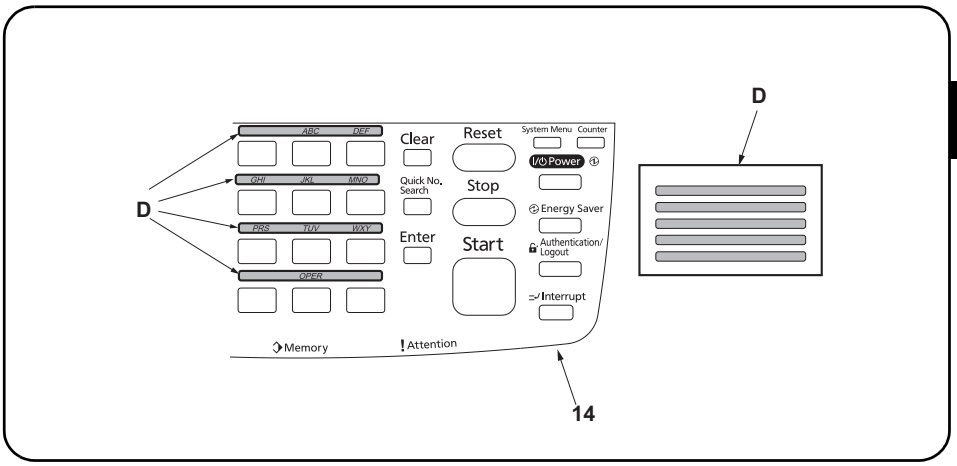

11. Remove the operation panel sheet (14).

12. Wipe the area above the numeric keys on the operation panel sheet (14) with alcohol and attach the alphabet labels (D).
In Asia and Oceania, use PQRS TUV WXYZ label, and do not use PRS TUV WXY and OPER labels.

---

11. Déposer la tôle du panneau de commande (14).

12. Nettoyer à l'alcool la surface au-dessus des touches numériques sur la tôle du panneau de commande (14) et apposer les étiquettes alphabétiques (D).
En Asie et Océanie, utiliser l'étiquette PQRS TUV WXYZ et pas les étiquettes PRS TUV WXY et OPER.

---

11. Quite la hoja del panel de trabajo (14).

12. Limpie el área sobre las teclas numéricas de la hoja del panel de trabajo (14) con alcohol y fije las etiquetas de alfabeto (D).
En Asia y Oceanía, utilice la etiqueta PQRS TUV WXYZ y no use las PRS TUV WXY ni las OPER.

---

11. Die Bedienfeldfolie (14) entfernen.

12. Den Bereich über den Zifferntasten an der Bedienfeldfolie (14) mit Alkohol abwischen und die Alphabetaufkleber (D) hier anbringen.
In Asien und Ozeanien den Aufkleber PQRS TUV WXYZ verwenden; nicht die Aufkleber PRS TUV WXY und OPER verwenden.

---

11. Rimuovere il foglio (14) del pannello operativo.

12. Pulire l'area sopra i tasti numerici sul foglio del pannello operativo (14) con alcool ed applicare le etichette alfabetiche (D).
In Asia ed Oceania, utilizzare l'etichetta PQRS TUV WXYZ e non utilizzare le etichette PRS TUV WXY e OPER.

---

11. 拆下操作面板页（14）。

12. 使用酒精清洁操作面板页（14）的数字键上部，粘贴英文字母标签 (D)。
在亚洲和大洋州，请使用 PQRS TUV WXYZ 标签，而不要使用 PRS TUV WXY 和 OPER 标签。

---

11. 조작판넬시트 (14) 를 제거합니다 .

12. 조작판넬시트 (14) 상에 숫자키 윗측을 알코올 청소하고 알파벳 라벨 (D) 을 붙입니다 .
아시아 / 오세아니아에서는「PRS TUV WXY」및「OPER」라벨을 사용하지 말고「PQRS TUV WXYZ」의 라벨을 사용할 것 .

---

11. この作業は不要。

12. この作業は不要。

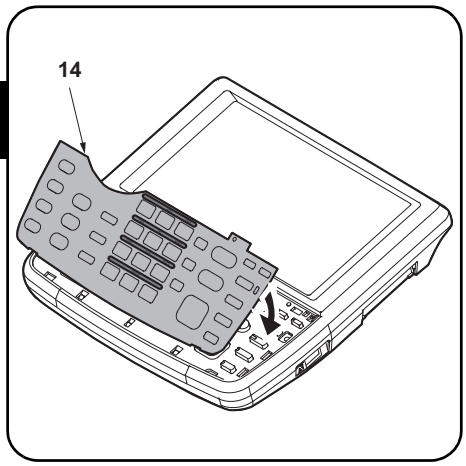

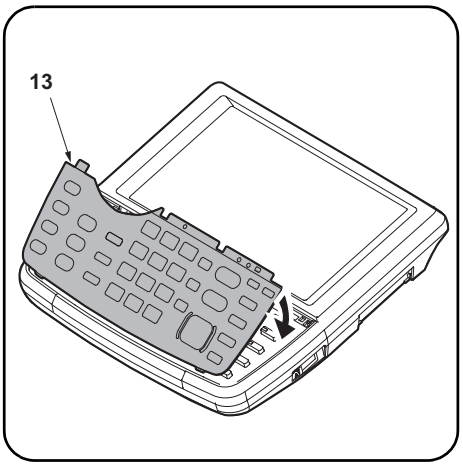

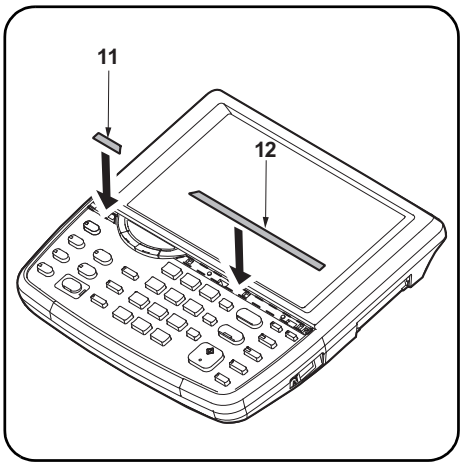

13. Attach the operation panel sheet (14).

14. Reinstall the clear panel (13).

15. Reinstall the operation panel covers (11) (12).

---

13. Fixer la tôle du panneau de commande (14).

14. Reposer le panneau transparent (13).

15. Reposer les couvercles du panneau de commande (11) (12).

---

13. Fije la hoja del panel de trabajo (14).

14. Vuelva a instalar el panel transparente (13).

15. Vuelva a instalar las cubiertas del panel de trabajo (11) (12).

---

13. Die Bedienfeldfolie (14) anbringen.

14. Die durchsichtige Platte (13) wieder anbringen.

15. Die Bedienfeldabdeckungen (11) (12) wieder anbringen.

---

13. Applicare il foglio del pannello operativo (14).

14. Reinstallare il pannello trasparente (13).

15. Reinstallare i coperchi (11) (12) del pannello operativo.

---

13. 安装操作面板页（14）。

14. 安装透明面板（13）。

15. 安装操作面板的盖板（11）（12）。

---

13. 조작판넬시트 (14) 를 붙입니다 .

14. 클리어판넬 (13) 를 부착합니다 .

15. 조작판넬 커버 (11) (12) 을 부착합니다 .

---

13. この作業は不要。

14. この作業は不要。

15. この作業は不要。

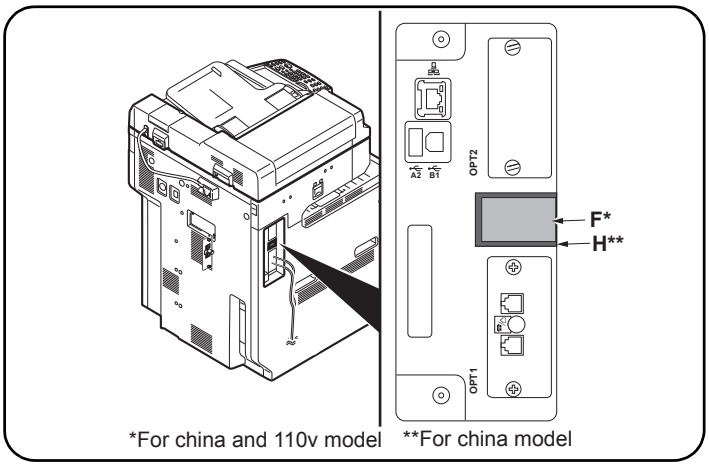

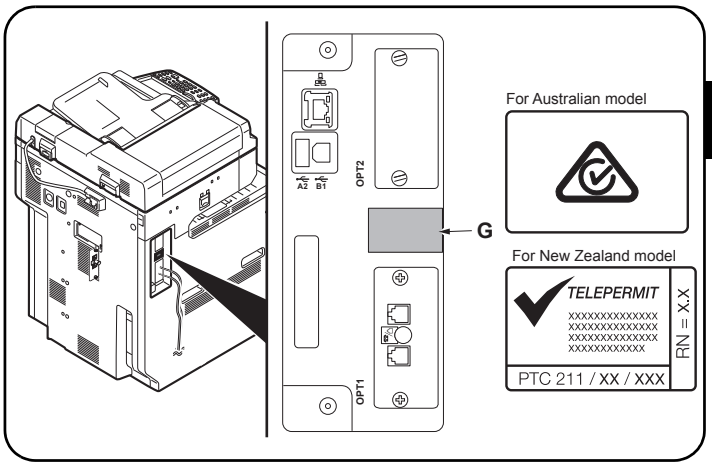

Attach the PTT label (for 110 V model only).

16. Attach the PTT label (F) at the point as shown above after wiping with alcohol.

Attach the approval label (for Australian/New Zealand model only).

17. Attach the approval label (G) at the point as shown above after wiping with alcohol.

Perform this procedure for Australian/New Zealand model only.

Fixer l'étiquette d'approbation (pour la Chine, modèles 110 V seulement).

16. Cette étape est superflue.

Fixer l'étiquette d'approbation (modèle pour l'Australie/Nouvelle-Zélande seulement).

17. Cette étape est superflue.

Coloque la etiqueta de aprobación (para China, solo para los modelos de 110 V).

16. Este paso no es necesario.

Coloque la etiqueta de aprobación (sólo para los modelos Australiano/Nuevo Zelandés)

17. Este paso no es necesario.

Den Genehmigungsaufkleber anbringen (für China nur 110-V-Modelle).

16. Dieser Schritt ist nicht erforderlich.

Den Genehmigungsaufkleber anbringen (nur für Australien/Neuseeland-Modell).

17. Dieser Schritt ist nicht erforderlich.

Applicare l'etichetta di approvazione (per Cina, solo per i modelli da 110 V).

16. Questo passo non è richiesto.

Applicare l'etichetta di approvazione (solo per il modello Australia/Nuova Zelanda)

17. Questo passo non è richiesto.

粘贴规格标签（仅限中国规格）

16. 在粘贴标签或贴片前，请用酒精清洁粘贴位置。按照图示位置来粘贴贴片（H）。把规格标签（F）粘贴在贴片（H）上面。

粘贴规格标签（仅适用于澳大利亚 / 新西兰型号）

17. 不需要本步骤。

규격라벨의 부착 (중국 , 110V 사양만)

16. 이 단계가 필요하지 않습니다 .

규격라벨의 부착 (오스트레일리아 / 뉴질랜드 사양만)

17. 이 단계가 필요하지 않습니다 .

規格ラベルの貼り付け（中国、110V 仕様のみ）

16. この作業は不要。

規格ラベルの貼り付け（オーストラリア / ニュージーランド仕様のみ）

17. この作業は不要。

Initialize the FAX circuit board.

1. Plug the MFP into a power outlet, and turn on the main power.
2. Perform the maintenance mode U600 to initialize the FAX PWBs

---

Initialiser la carte à circuits FAX.

1. Brancher le MFP sur une prise d'alimentation et le mettre sous tension.
2. Exécuter le mode maintenance U600 pour initialiser les cartes de circuit imprimé du fax .

Inicialice la tarjeta de circuitos FAX.

1. Conecte el MFP a un receptáculo de pared y encienda el interruptor principal.
2. Ejecute el modo de mantenimiento U600 para inicializar los FAX PWB.

Initialisieren der FAX-Leiterplatte.

1. Netzstecker des MFP in eine Steckdose stecken und Hauptschalter einschalten.
2. Führen Sie den Wartungsmodus U600 aus, um die FAX-Karte zu initialisieren.

Questo passo non è richiesto.**Inizializzare la scheda a circuiti FAX.**

1. Collegare l'MFP ad una presa di corrente e portare l'interruttore principale su On.
2. Eseguire il modo manutenzione U600 per inizializzare le schede PWB FAX.

传真电话板的初始化

1. 将 MFP 的电源插头插入电源插座，打开主电源。
2. 执行维修保养模式 U600，初始化传真电路板。

FAX 회로기판의 초기화

1. MFP 본체 전원플러그를 콘센트에 꼽고 주 전원 스위치를 ON 으로 한다 .
2. 메인터넌스 모드 U600 을 수행하여 FAX 회로기판을 초기화합니다 .

FAX 基板の初期化

1. MFP 本体の電源プラグをコンセントに差し込み、主電源スイッチを ON にする。
2. メンテナンスモード U600 を実行し、FAX 基板を初期化する。

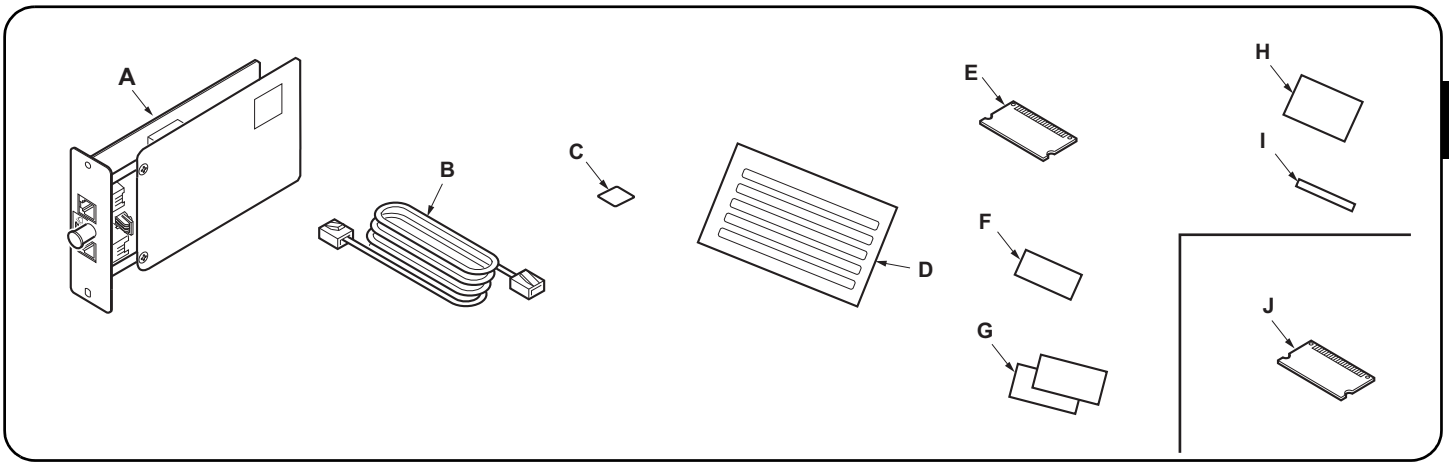

When installing the multiport on a machine (B) which has the 'Accessibility Display' key in the operation panel

Supplied parts

A. FAX circuit board 1
B. Modular connector cable (120 V/Australian model only) PJJWC0016Z (UL Listed.HUAN HSIN Type TL:120 V only) 1
C. Terminal seal..... 1
D. Alphabet label..... 1
E. Memory DIMM (16 MB) 1
F. PTT label (110V model only) 1
G. Approval label (Australian/New Zealand models only)..... 2

Option

J. Memory DIMM (128 MB) 1

(H) and (I) are not supplied.
(D), (E), (F), (G) and (J) are not used.
Be sure to remove any tape and/or cushioning materials from the parts supplied.

Lors de l'installation du port multiple sur une machine (B) disposant de la touche 'Affich. accessibilité' sur le panneau de commande

Pièces fournies

A. Carte à circuits FAX..... 1
B. Câble du connecteur modulaire (modèles pour l'Australie/120 V seulement)..... 1
C. Joint de borne..... 1
D. Etiquette de l'alphabet..... 1
E. Mémoire DIMM (16 MB) 1

Option

J. Mémoire DIMM (128 MB) 1

(F), (G), (H) et (I) ne sont pas fournis.
(D), (E) et (J) ne sont pas utilisés.

Veillez à retirer les morceaux de bande adhésive et/ou les matériaux de rembourrage des pièces fournies.

Al instalar un puerto múltiple en una máquina (B) que dispone de la tecla 'Pantalla acceso' en el panel de controles

Partes suministradas

A. Tarjeta de circuitos de fax..... 1
B. Cable conector modular (sólo para modelos de 120 V/Australianos)..... 1
C. Sello del terminal..... 1
D. Etiqueta de alfabeto..... 1
E. Memoria DIMM (16 MB) 1

Opción

J. Memoria DIMM (128 MB) 1

(F), (G), (H) y (I) no se suministran.
(D), (E) y (J) no se utilizan.

Asegúrese de quitar todas las cintas y/o material amortiguador de las partes suministradas.

Bei Installation einer zweiten Leitung in einem Gerät (B), das über die Taste 'Zugriffsanzeige' im Bedienfeld verfügt

Enthaltene Teile

A. FAX-Leiterplatte..... 1
C. Verschlusskappe 1
D. Alphabetaufkleber..... 1
E. Speicher-DIMM (16 MB) 1

Option

J. Speicher-DIMM (128 MB) 1

(B), (F), (G), (H) und (I) liegen nicht bei.
(D), (E) und (J) werden nicht benötigt.

Stellen Sie sicher, dass sämtliche Klebebänder und/oder Polstermaterial von den gelieferten Teilen entfernt wurden.

Per l'installazione di una porta multipla su una macchina (B) dotata di tasto 'Visual. Accessibilità' sul pannello comandi

Parti fornite

A. Scheda a circuiti FAX 1
C. Guarnizione terminale 1
D. Etichetta alfabetica 1
E. Memoria DIMM (16 MB) 1

Opzioni

J. Memoria DIMM (128 MB) 1

(B), (F), (G), (H) e (I) non sono in dotazione.
(D), (E) e (J) non sono utilizzati.

Rimuovere tutti i nastri adesivi e/o i materiali di protezione dalle parti fornite.

当安装双路传真系统到那些操作面板上有 ' 扩大显示 ' 按键的机器 (B) 时

附属品

A. 传真电路板..... 1
B. 电话线..... 1
C. 端子密封..... 1
D. 英文字母标签..... 1
E. 内存模组 DIMM (16MB) 1
F. 规格标签 1
H. 贴片 1
I. 名称标签 1

选购件

J. 内存模组 DIMM (128MB) 1

(G) 并非附属品。
不使用 (D),(E),(F),(H),(I), 和 (J)。

如果附属品上带有固定胶带，缓冲材料时务必揭下。

조작판넬에 ' 유니버셜 ' 키가 있는 본체 (B) 에 멀티 포트를 설치하는 경우

동봉품

A. FAX 기판 1
C. 단자씰.....1
D. 알파벳 라벨.....1
E. 메모리 DIMM (16MB) 1

옵션

J. 메모리 DIMM (128MB) 1

(B) , (F) ,(G), (H) ,(I) 는 동봉되어 있지 않습니다 .
(D) , (E) ,(J) 는 사용되지 않습니다 .

동봉품에 고정 테이프 , 완충재가 붙어 있는 경우에는 반드시 제거하십시오 .

操作パネルに ‘ ユニバーサル ’ キーがある機械 (B) にマルチポートを設置する場合

同梱品

A. FAX 基板 1
B. モジュラーコード..... 1
C. 端子シール..... 1
E. メモリーDIMM(16MB)..... 1

オプション

J. メモリーDIMM(128MB) 1

(D),(F),(G)),(H),(I) は、同梱されていない。
(E),(J) は、使用しない。

同梱品に固定テープ、緩衝材がついている場合は、必ず取り外すこと。

NOTICE
If the finisher is already installed, remove the finisher before installing FAX System(W).
Before starting installation, be sure to turn the main power switch of the machine off, and unplug the power plug from the wall outlet.

REMARQUE
Si le retoucheur est déjà en place, le déposer avant de monter le FAX System(W).
Avant de commencer l'installation, s'assurer de mettre la machine hors tension et de débrancher la fiche d'alimentation de la prise murale.

AVISO
Si el finalizador ya se encuentra instalado, desmóntelo antes de instalar el FAX System(W).
Antes de iniciar la instalación, asegúrese de apagar el interruptor de encendido de la máquina y desenchufar el cable de alimentación de la toma de pared.

ANMERKUNG
Falls der Finisher schon installiert ist, müssen Sie ihn ausbauen, bevor Sie das FAX System(W) installieren.
Bevor Sie mit der Installation beginnen überzeugen Sie sich, dass der Netzschalter des Geräts ausgeschaltet und das Stromkabel aus der Steckdose gezogen ist.

AVVISO
Se la finitrice è già installata, rimuovere la finitrice prima di installare il FAX System(W).
Prima di iniziare l'installazione, spegnere la macchina e scollegare la spina dalla presa di corrente.

注意
已安装装订器时，必须先拆下装订器再安装 FAX System(W)。
安装前务必关闭机器的主电源开关，并从墙壁插座拔下电源插头。

주의
피니셔가 이미 장착되어 있는 경우에는 피니셔를 제거하고 FAX System(W) 를 설치할 것 .
설치를 시작하기 전에 반드시 본체의 주 전원 스위치를 끄고 벽 콘센트에서 전원 플러그를 분리하십시오 .

注意
フィニッシャーがすでに装着されている場合は、フィニッシャーを取り外してから、FAX System(W) を取り付けること。
必ず機械本体の主電源スイッチを OFF にし、機械本体の電源プラグを抜いてから作業すること。

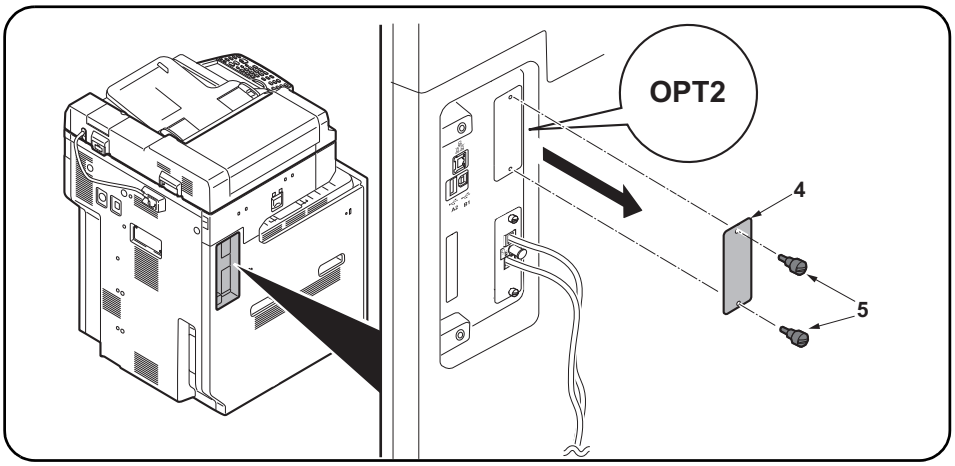

Procedure
Removing the slot cover
1. Remove 2 screws (5) and then remove the OPT2 slot cover (4).

Procédure
Dépose du couvercle de la fente
1. Déposer les 2 vis (5) puis le couvercle de la fente OPT2 (4).

Procedimiento
Desmontaje de la cubierta de la ranura
1. Quite 2 tornillos (5) y, después, quite la cubierta de la ranura OPT2 (4).

Vorgehensweise
Entfernen der Einschubabdeckung
1. 2 Schrauben (5) entfernen und dann die Abdeckung (4) des Einschubs OPT2 entfernen.

Procedura
Rimozione del coperchio vano
1. Rimuovere le 2 viti (2) e quinidi rimuovere il coperchio (1) del vano OPT2.

安装步骤
拆下插槽盖板
1. 拆除 2 颗螺丝 (5)，拆下 OPT2 的插槽盖板 (4)。

설치순서
슬롯커버 제거
1. 나사 (5) 2 개를 제거하고 OPT2 의 슬롯커버 (4) 를 제거합니다 .

取付手順
スロットカバーの取り外し
1. ビス (5)2 本を外し、OPT2 のスロットカバー(4) を取り外す。

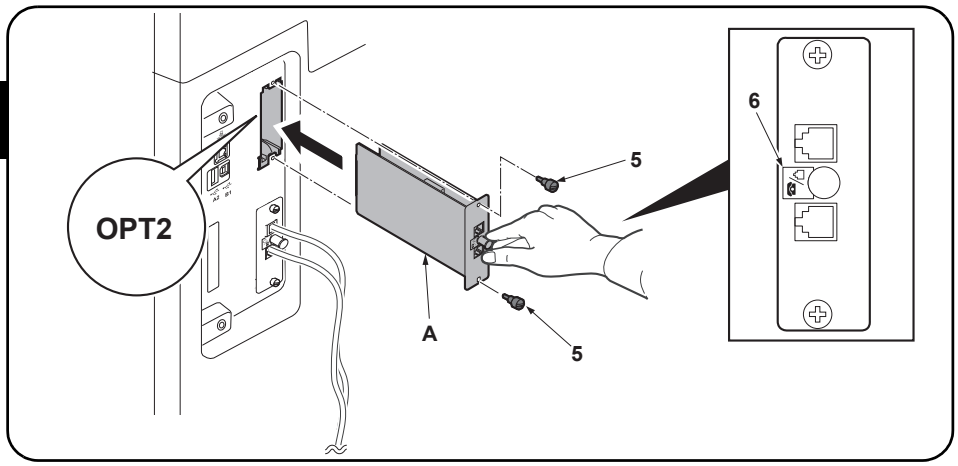

Install the FAX circuit board.

2. Insert the FAX circuit board (A) along the groove in OPT2 and secure the board with two screws (5) that have been removed in step 1.
Do not directly touch the FAX circuit board (A) terminal.
Hold the top and bottom of the FAX circuit board, or the projection of the board to insert the FAX circuit board (A).
Direct the label (6) on to the FAX circuit board (A) toward left side and insert the board along the groove.

Installer la carte à circuits FAX.

2. Insérer la carte à circuits FAX (A) le long de la rainure dans l'OPT2 et la fixer à l'aide des deux vis (5) retirées à l'étape 1.
Ne pas toucher directement la borne de la carte à circuits FAX (A).
Tenir les parties inférieure et supérieure de la carte à circuits FAX ou la saillie de la carte pour insérer la carte à circuits FAX (A).
Orienter l'étiquette (6) de la carte à circuits FAX (A) comme illustré et insérer la plaquette le long de la rainure.

Instale la tarjeta de circuitos de FAX.

2. Inserte la tarjeta de circuitos de fax (A) a lo largo de la ranura de OPT2 y asegúrela con los dos tornillos (5) que ha quitado en el paso 1.
No toque directamente el terminal de la tarjeta de circuitos del FAX (A).
Sujete las partes superior e inferior de la tarjeta de circuitos de FAX o la saliente de la tarjeta para insertar la tarjeta de circuitos de FAX (A).
Oriente la etiqueta (6) en la tarjeta de circuitos del FAX (A) como se indica en la ilustración e inserte la tarjeta a lo largo de la ranura.

Installieren der FAX-Leiterplatte.

2. FAX-Leiterplatte (A) in die Nut des Einbauschachts OPT2 einsetzen und Leiterplatte mit den in Schritt1 ausgebauten Schrauben (5) befestigen.
Berühren Sie die Anschlüsse der FAX-Platine (A) nicht mit den Fingern.
Die FAX-Leiterplatte (A) bein Einsetzen oben und unten oder an dem Vorsprung festhalten.
Die FAX-Leiterplatte (A) so in die Nut einsetzen, dass der Aufkleber (6) wie abgebildet zur Leiterplatte zeigt.

Installare la scheda a circuiti FAX.

2. Inserire la scheda a circuiti FAX (A) lungo l'incavo nell'OPT2 e fissare la scheda con le due viti (5) rimosse nell'operazione 1.
Non toccare direttamente il terminale della scheda a circuiti FAX (A),
Per inserire il circuito FAX (A), tenere l'estremit superiore e la base della scheda a circuiti FAX, o la sporgenza della scheda a circuiti FAX.
Orientare l'etichetta (6) sulla scheda a circuiti FAX (A) come indicato nell'illustrazione e inserire la scheda lungo l'incavo.

安装传真电路板

2. 沿着 OPT2 的沟槽插入传真电路板 (A) 并用在步骤 1 中拆下的两颗螺钉 (5) 固定电路板。
请勿直接触摸传真电路板 (A) 端子。
按住传真电路板的顶部和底部，或者按住电路板的突出部将传真电路板 (A) 插入。
将传真电路板 (A) 上的标签 (6) 保持图示中的方向，将电路板沿着沟槽方向插入。

FAX 회로기판 장착

2. OPT2 의 홈을 따라 FAX 회로기판 (A) 를 삽입하고 앞 순서 1 에서 제거한 나사 (5) 2 개로 고정합니다 .
FAX 회로기판 (A) 의 단자에 직접 닿지 않도록 할 것 .
FAX 회로기판 (A) 삽입 시 , 회로기판의 상하 또는 돌출부를 잡을 것 .
FAX 회로기판 (A) 를 부착된 라벨 (6) 그림 표기 방향으로 삽입할 것 .

FAX 基板の取り付け

2. OPT2 の溝に沿って FAX 基板 (A) を挿入し、手順 1 で外したビス (5)2 本で固定する。
FAX 基板 (A) の端子に直接触れないこと。
FAX 基板 (A) の挿入時は基板の上下か突起を持つこと。
FAX 基板 (A) は、貼り付けられているラベル (6) が図に示す方向になるように、挿入すること。

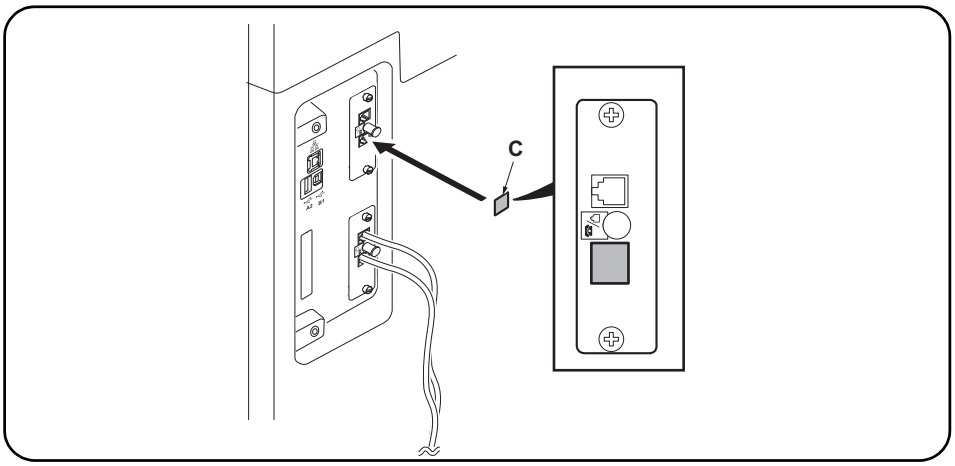

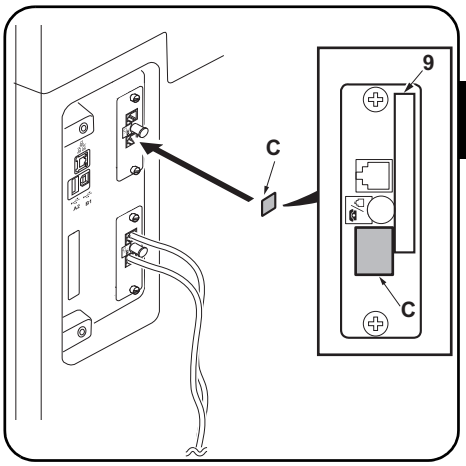

Seal the terminal.

3. Wipe the surface of the telephone terminal with alcohol and adhere the terminal seal (C).
The telephone terminal on the FAX circuit board installed to OPT2 is unavailable (invalid). Seal the terminal securely to prevent a user from connecting a separate phone.

On 120 V models, be sure that it is not attached over the top of the approval label (9).

Fermer hermétiquement la borne.

3. Nettoyer la surface de la borne de téléphone avec de l'alcool, et apposer le joint de borne (C).
La borne de téléphone de la carte à circuits FAX installée sur l'OPT2 n'est pas utilisable (invalide). Fermer hermétiquement la borne pour empêcher tout utilisateur de connecter un téléphone séparé.

Sur les modèles 120 V, attention à ne pas installer en recouvrant le haut de l'étiquette d'approbation (9).

Selle el terminal.

3. Limpie la superficie del terminal de teléfono con alcohol y pegue el sello de terminal (C).
El terminal de teléfono de la tarjeta de circuitos de FAX instalado en el OPT2 no está disponible (inválido). Selle firmemente el terminal para evitar que un usuario conecte un teléfono por separado.

En los modelos de 120 V, asegúrese de que no se fije sobre la etiqueta de aprobación (9).

Versiegeln der Anschlussbuchse.

3. Die Oberfläche der Telefonanschlussbuchse mit Alkohol abwischen und die Verschlusskappe (C) anbringen.
Die Telefonanschlussbuchse der in OPT2 installierten FAX-Leiterplatte ist nicht verfügbar (ungültig). Die Anschlussbuchse vollkommen versiegeln, um den Anschluss eines separaten Telefons zu verhindern.

Bei 120-V-Modellen darauf achten, dass der Aufkleber nicht den Genehmigungsaufkleber (9) verdeckt.

Sigillare il terminale.

3. Pulire la superficie del terminale del telefono con alcol e fare aderire la guarnizione terminale (C).
Il terminale del telefono sulla scheda a circuiti FAX installata su OPT2 non è disponibile (invalido). Sigillare il terminale saldamente per prevenire a un utente di collegare un telefono separato.

Sui modelli da 120 V, assicurarsi che essa non venga applicata sopra l'etichetta di approvazione (9).

安装端子密封

3. 用酒精擦拭电话端子表面并粘上端子密封 (C)。
安装在 OPT2 上的传真电路板的电话端子不可使用 (无效)。为了避免用户错误与其它电话连接，必须确实粘贴好端子密封。

120V 规格在粘贴时注意不要与认可标签 (9) 重叠。

단자씰의 부착

3. TEL 단자주위를 알코올청소하고 단자씰 (C) 을 부착합니다 .
OPT2 에 부착한 FAX 기판의 TEL 단자는 사용불가 (무효) 가 됩니다 . 사용자가 잘못해 외부 전화를 연결하지 않도록 확실히 부착할 것 .

120V 사양은 허가 라벨 (9) 에 겹치지 않도록 붙일 것 .

端子シールの貼り付け

3. TEL 端子周囲をアルコール清掃し、端子シール (C) を貼り付ける。
OPT2 に取り付けた FAX 基板の TEL 端子は使用不可(無効)となる。ユーザーが誤って外付け電話を接続しないよう確実に貼り付けること。

120V 仕様は認可ラベル(9)に重ならないように、貼り付けること。

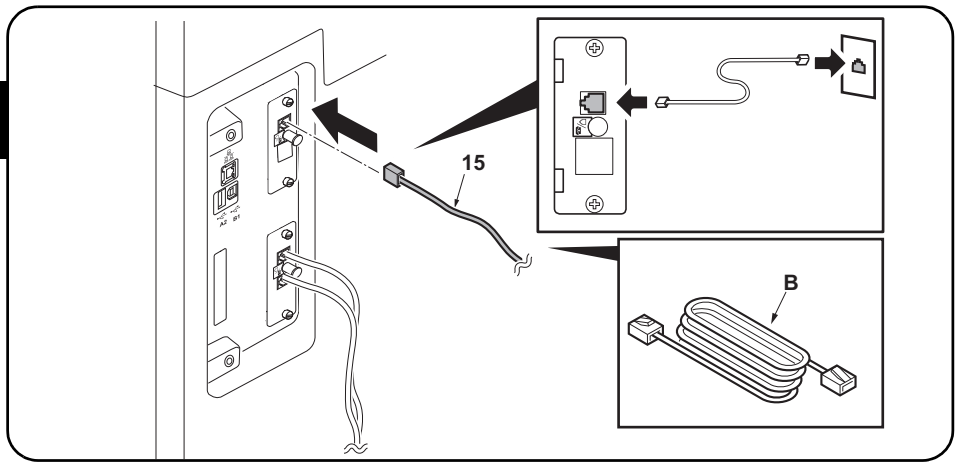

Connect the MFP to the telephone line.

4. Plug the modular connector cable (15) into the line terminal, and then connect the other end to the telephone line.
For 100 V/120 V/Australian or Chinese models, use the supplied modular connector cable (B).

Connecter le MFP à la ligne de téléphone.

4. Brancher le câble du connecteur modulaire (15) à la borne de la ligne, puis connecter l'autre extrémité à la ligne de téléphone.
Pour les modèles 100 V/120 V/Australie ou Chine, utilisez le câble à connecteur modulaire (B) fourni.

Conecte el MFP a la línea telefónica.

4. Enchufe el cable del conector modular (15) en el terminal de línea y, a continuación, conecte el otro extremo a la línea telefónica.
Para los modelos de 100 V/120 V/Australiano o Chino, utilice el cable conector modular (B) suministrado.

Anschließen des MFP an die Telefonleitung.

4. Telefonmodulkabel (15) in die Gerätebuchse einstecken und das Kabel an der Telefondose anschließen.
Das mitgelieferte Modularsteckerkabel (B) für die 100-V/120-V/Australien- oder China-Modelle verwenden.

Collegamento dell'MFP alla linea del telefono.

4. Inserire il cavo connettore modulare (15) nel terminale della linea, e quindi collegare l'altro terminale alla linea del telefono.
Per modelli da 100 V/120 V/Australia o Cina, utilizzare il cavo connettore modulare (B) in dotazione.

将 MFP 连接到电话线

4. 将模块接插件电缆 (15) 插入电话线端子，然后将另一端与电话线连接。
对于 100V/120V/ 澳大利亚或中国机型，请使用随附的模块接插件电缆 (B)。

전화회선과의 연결

4. 모듈러 코드 (15) 를 라인단자에 꽂습니다 . 다른 한 쪽의 플러그는 전화회선과 연결합니다 .
100V/120V/ 오스트레일리아 / 중국사양은 부속 모듈러 코드 (B) 를 사용할 것 .

電話回線との接続

4. モジュラーコード (15) をライン端子に差し込む。もう片方のプラグは、電話回線へ接続する。
100V/120V/ オーストラリア / 中国仕様は付属のモジュラーコード (B) を使用すること。

(Initialize the FAX circuit board.

1. Plug the MFP into a power outlet, and turn on the main power.
2. If the FAX PWBs were installed simultaneously to OPT1 and OPT2 (all Fax PWBs are initialized), perform the maintenance mode U600 to initialize the FAX PWBs.
3. If the FAX circuit board has been added to OPT2 (to initialize the FAX circuit board in OPT2)
   Initialize OPT2 by pressing [PORT2], and the Start key in this order in the maintenance mode U698 and executing the maintenance mode U600. If [ALL] is selected in U698, both OPT1 and OPT2 are initialized. For details, see the service manual.

Initialiser la carte à circuits FAX.

1. Brancher le MFP sur une prise d'alimentation et le mettre sous tension.
2. Si les cartes de circuit imprimé du fax ont été installées en même temps que OPT1 et OPT2 (toutes les cartes de circuit imprimé du fax sont initialisées), exécuter le mode maintenance U600 pour initialiser les cartes de circuit imprimé du fax.
3. Si la carte à circuits FAX a été ajoutée à l'OPT2 (pour initialiser la carte à circuits FAX dans l'OPT2)
   Initialiser l'OPT2 en appuyant sur [PORT2] et la touche Départ dans cet ordre en mode de maintenance U698, et exécuter le mode de maintenance U600. Si [ALL] est sélectionné dans U698, l'OPT1 et l'OPT2 sont tous deux initialisés. Pour plus de détails, se reporter au manuel d'entretien.

Inicialice la tarjeta de circuitos FAX.

1. Conecte el MFP a un receptáculo de pared y encienda el interruptor principal.
2. Si se instalaron FAX PWB simultáneamente a OPT1 y OPT2 (se inicializan todos los FAX PWB), ejecute el modo de mantenimiento U600 para inicializar los FAX PWB.
3. Si la tarjeta de circuitos de FAX se agregó a OPT2 (para inicializar la tarjeta de circuitos de FAX en OPT2)
   Inicialice el OPT2 presionando [PORT2] y la tecla de Inicio en ese orden en el modo de mantenimiento U698 y ejecutando el modo de mantenimiento U600. Si se selecciona [ALL] en U698, se inicializan ambos OPT1 y OPT2. Para más detalles, lea el manual de servicio.

Initialisieren der FAX-Leiterplatte.

1. Netzstecker des MFP in eine Steckdose stecken und Hauptschalter einschalten.
2. Falls die FAX-Karten gleichzeitig in OPT1 und OPT2 installiert werden (alle FAX-Karten werden initialisiert), führen Sie den Wartungsmodus U600 aus, um die FAX-Karten zu initialisieren.
3. Wenn die FAX-Leiterplatte zu OPT2 hinzugefügt worden ist (um die FAX-Leiterplatte in OPT2 zu in7itialisieren)
   OPT2 initialisieren. Dazu [PORT2] und die Start-Taste im Wartungsmodus U698 in dieser Reihenfolge drücken und den Wartungsmodus U600 ausführen. Wenn [ALL] in U698 gewählt wird, werden OPT1 und OPT2 initialisiert. Weitere Einzelheiten siehe Wartungsanleitung.

Inizializzare la scheda a circuiti FAX.

1. Collegare l'MFP ad una presa di corrente e portare l'interruttore principale su On.
2. Se sono state installate simultaneamente le schede FAX PWB su OPT1 e OPT2 (tutte le schede FAX PWB sono inizializzate), eseguire il modo manutenzione U600 per inizializzare le schede FAX PWB.
3. Se la scheda a circuiti è stata aggiunta all'OPT2 (per inzializzare la scheda a circuiti FAX nell'OPT2)
   Inizializzare OPT2 premendo [PORT2] e il tasto Avvio in questo ordine nel modo di manutenzione U698 ed eseguendo il modo di manutenzione U600. Se viene selezionato [ALL] nel modo U698, entrambi OPT1 e OPT2 sono inizializzati. Per ulteriori dettagli leggere il manuale d'istruzioni.

传真电话板的初始化

1. 将 MFP 的电源插头插入电源插座，打开主电源。
2. 当把传真电路板同时安装到 OPT1 和 OPT2 时（全部的传真电路板初始化），执行维修保养模式 U600，初始化传真电路板。
3. 在 OPT2 上增设时
   (OPT2 的传真电路板初始化)
   只进行 OPT2 初始化时，在维修保养模式 U698 状态下，按顺序按下 "PORT2"、开始键，执行维修保养模式 U600。
   在 U698 状态下设定 "ALL" 时，会使 OPT1 和 OPT2 均初始化。
   有关详信息，请参见维修手册。

FAX 회로기판의 초기화

1. MFP 본체 전원플러그를 콘센트에 꼽고 주 전원 스위치를 ON 으로 한다 .
2. OPT1 과 OPT2 에 FAX 회로기판을 동시에 설치한 경우 (모든 FAX 회로기판이 초기화됨), 메인터넌스 모드 U600 을 수행하여 FAX 회로기판을 초기화합니다 .
3. OPT2 에 증설한 경우 (OPT2 의 FAX 기판을 초기화)
   메인터넌스모드 U698 에서 「PORT2」, 시작키 순으로 누릅니다 . 메인터넌스 모드 U600 을 실행하고 FAX 회로기판을 초기화합니다 .
   U698 에서 「ALL」을 설정하면 OPT1 과 OPT2 양쪽을 초기화하기 때문에 주의할 것 .
   상세는 서비스 매뉴얼을 참조할 것 .

FAX 基板の初期化

1. MFP 本体の電源プラグをコンセントに差し込み、主電源スイッチを ON にする。
2. OPT1 と OPT2 に FAX 基板を同時に設置した場合 (すべての FAX 基板を初期化) メンテナンスモード U600 を実行し、FAX 基板を初期化する。
3. OPT2 に増設した場合 (OPT2 の FAX 基板を初期化)
   メンテナンスモード U698 で「PORT2」、スタートキーの順に押す。メンテナンスモード U600 を実行し、FAX 基板を初期化する。
   U698 で「ALL」を設定すると OPT1 と OPT2 両方を初期化するので注意すること。詳細はサービスマニュアルを参照のこと。

303N65673201

2015.11
303N656732-01

INSTALLATION GUIDE FOR DOCUMENT TABLE

INSTALLATION GUIDE

GUIDE D'INSTALLATION

GUÍA DE INSTALACION

INSTALLATIONSANLEITUNG

GUIDA ALL'INSTALLAZIONE

安装手册

설치안내서

設置手順書

for Color MFP 30/30ppm,35/35ppm,45/45ppm,55/50ppm
for Black & White MFP 35ppm,45ppm,55ppm

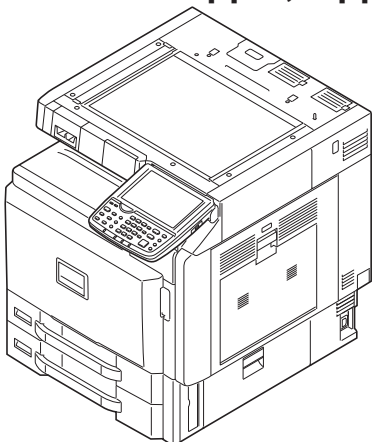

DT-730(B)

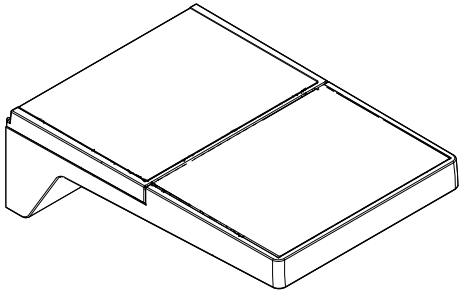

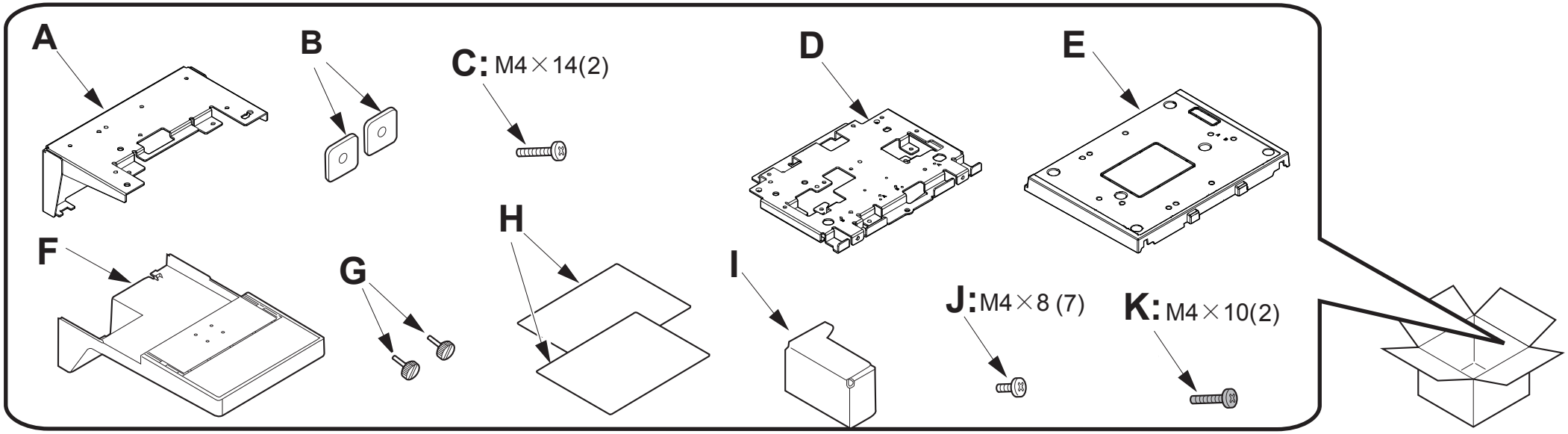

ENG (K) is not used.

FR (K) n'est pas utilisé.

ES (K) no se utiliza.

DE (K) wird nicht verwendet.

IT (K) non viene utilizzata.

CN 不使用（K）。

KO (K)는 사용되지 않습니다.

JP （K）は使用しません。

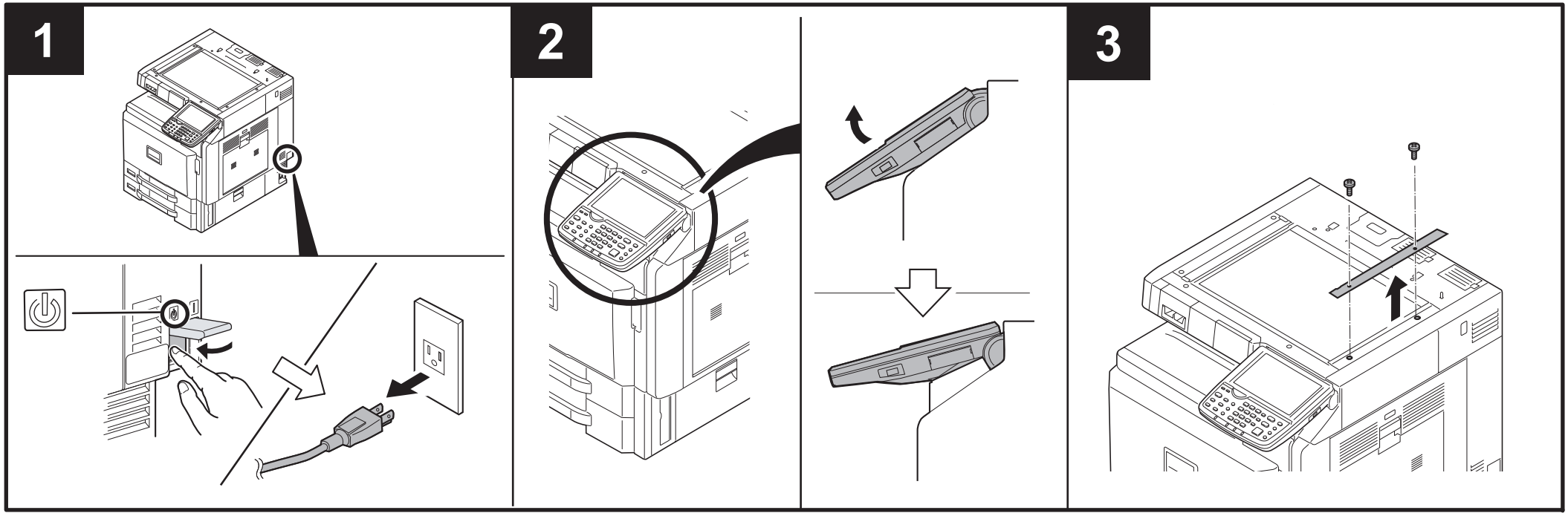

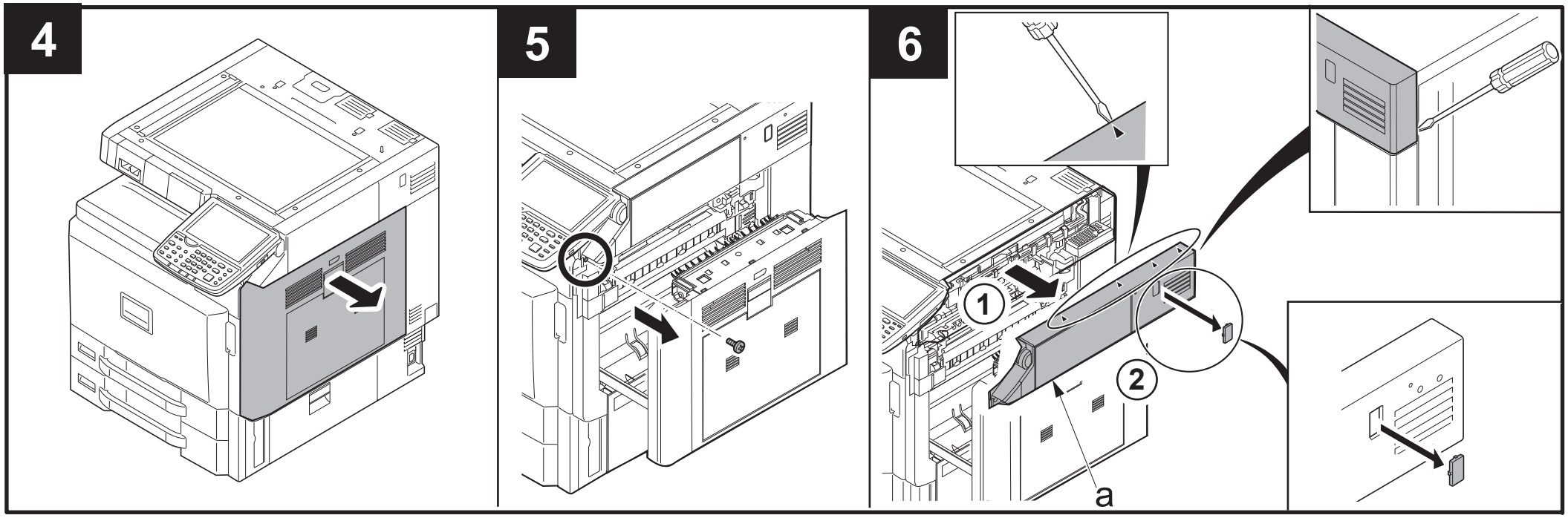
4
5
6
1
2
a

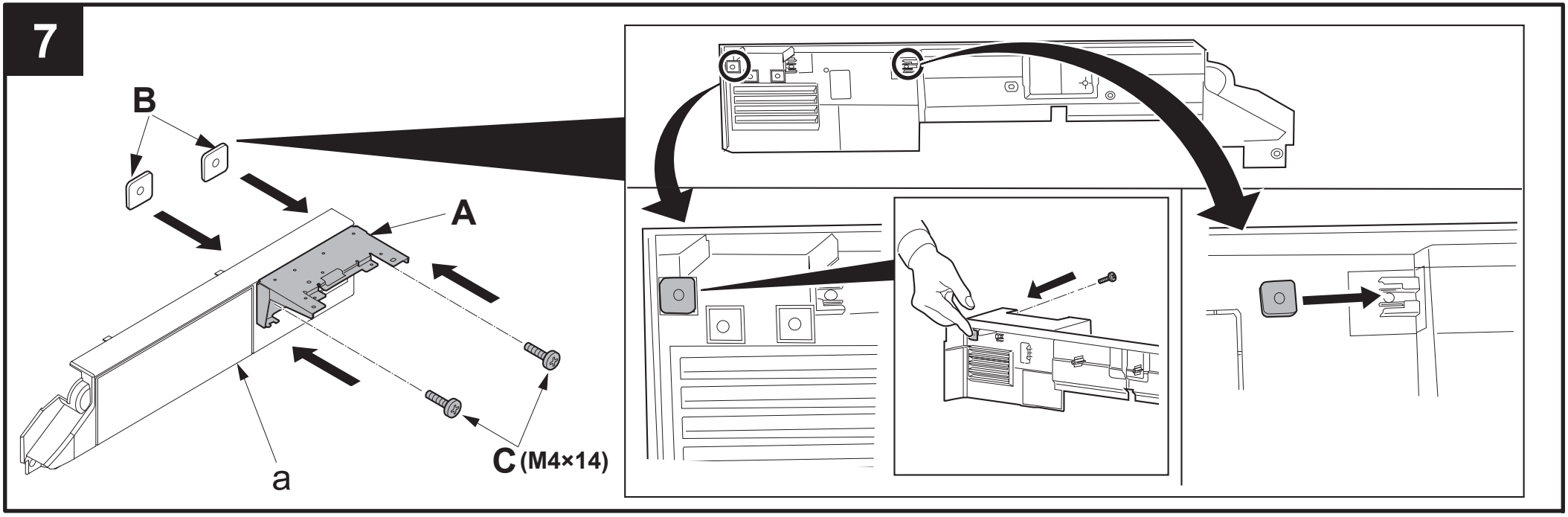
7
B
A
a
C (M4×14)

ENG If the right job separator is not installed, proceed to step 8.

FR Si le séparateur de travaux correspondant n'est pas installé, passer à l'étape 8.

ES Si no está instalado el separador de trabajos derecho, vaya al paso 8.

DE Gehen Sie weiter zu Schritt 8, falls der rechte Job-Separator nicht installiert ist.

IT Se il separatore lavori destro non è installato, procedere al punto 8.

CN 如果没有安装右作业分离器，请进入步骤8。

KO 우측 작업 분류기가 설치되어 있지 않은 경우 순서 8로 진행합니다.

JP 右ジョブセパレーターが設置されていない場合、手順8へ進む。

ENG If the right job separator is installed, proceed to step 10.

FR Si le séparateur de travaux correspondant est installé, passer à l'étape 10.

ES Si está instalado el separador de trabajos derecho, vaya al paso 10.

DE Gehen Sie weiter zu Schritt 10, falls der rechte Job-Separator installiert ist.

IT Se il separatore lavori destro è installato, procedere al punto 10.

CN 如果安装了右作业分离器，请进入步骤10。

KO 우측 작업 분류기가 설치되어 있는 경우 순서 10로 진행합니다.

JP 右ジョブセパレーターが設置されている場合、手順10へ進む。

8

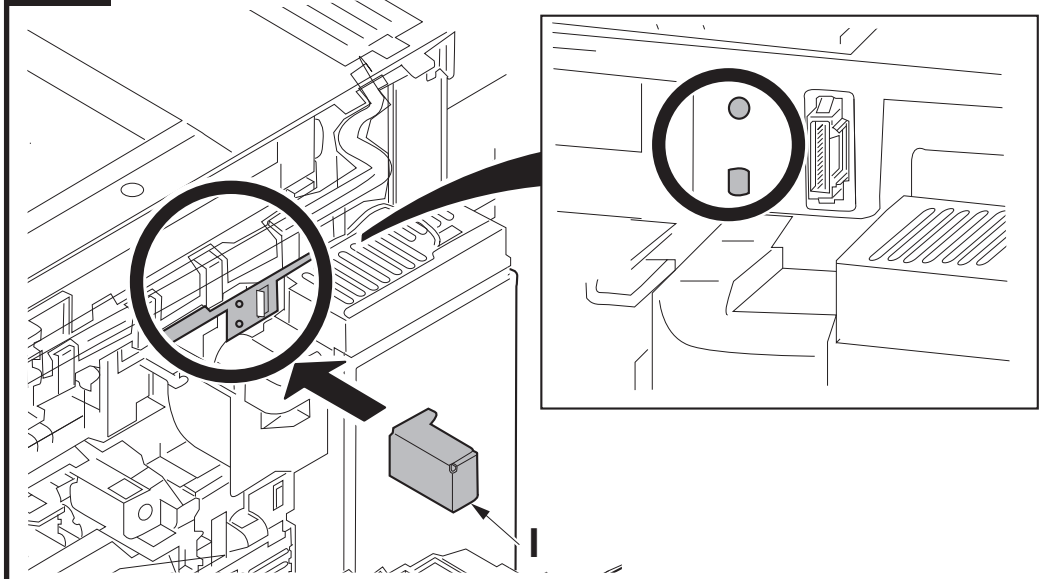

9

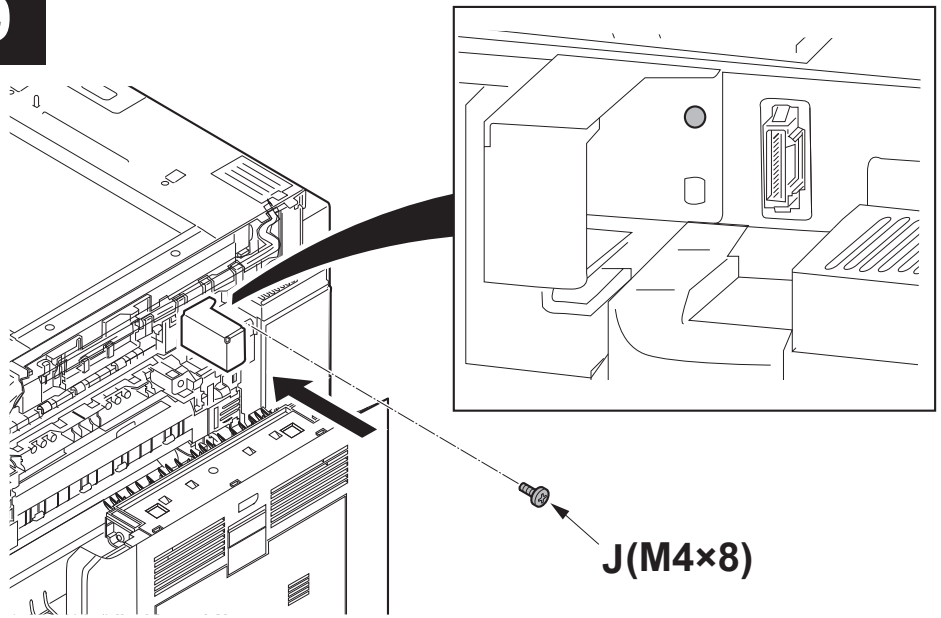

10

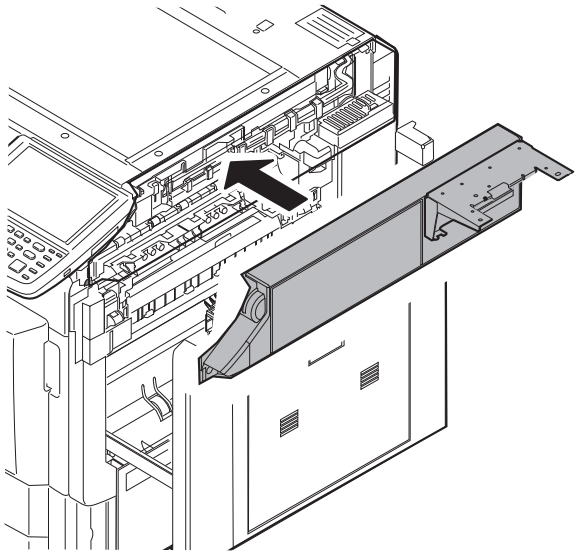

11

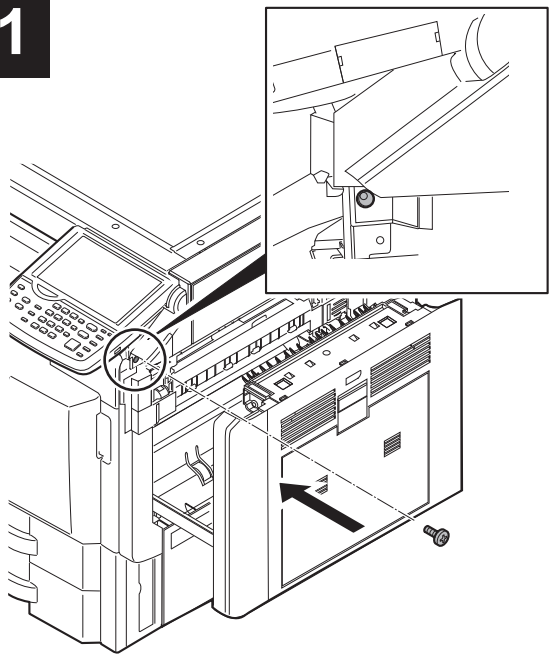

12

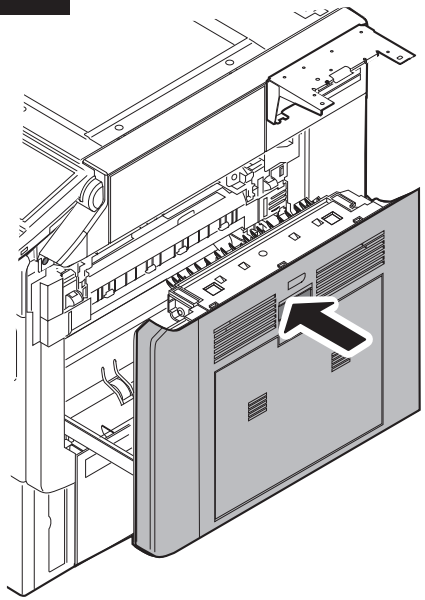

13

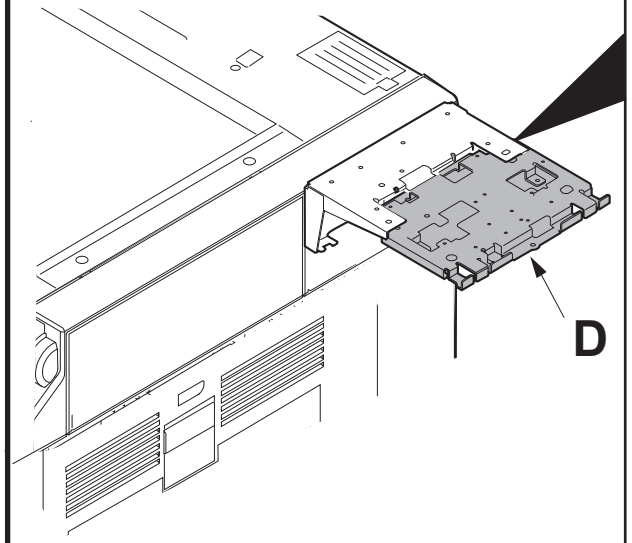

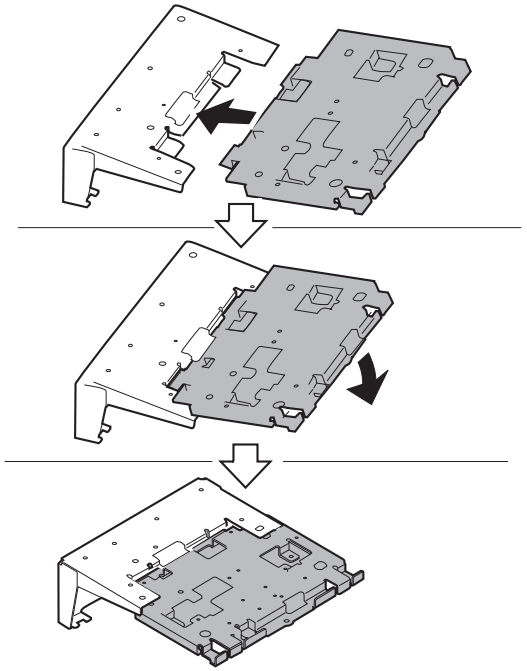

14

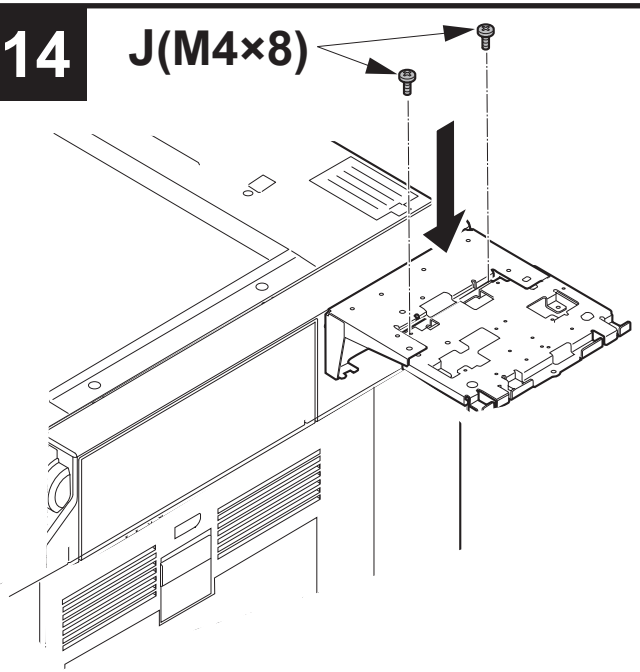

15

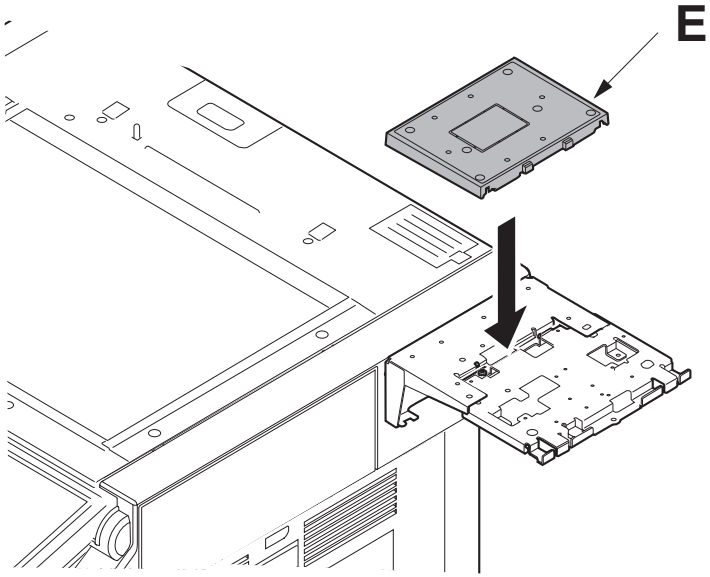

16

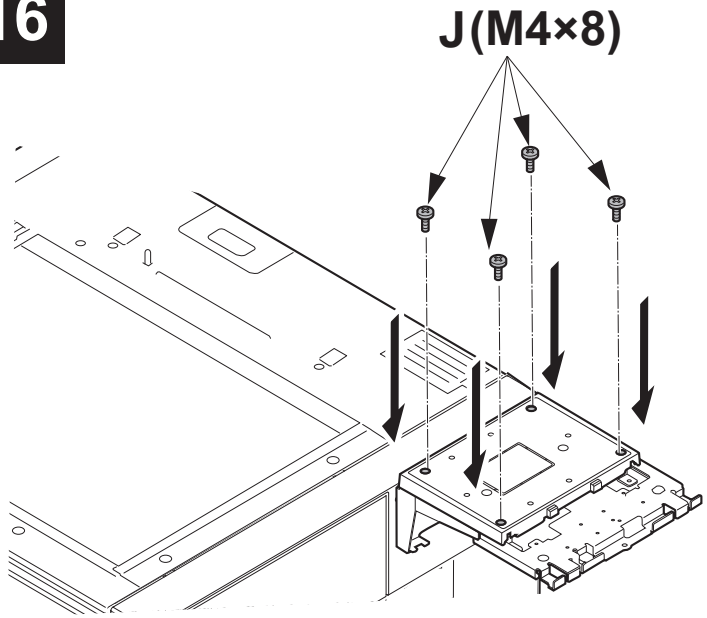

17

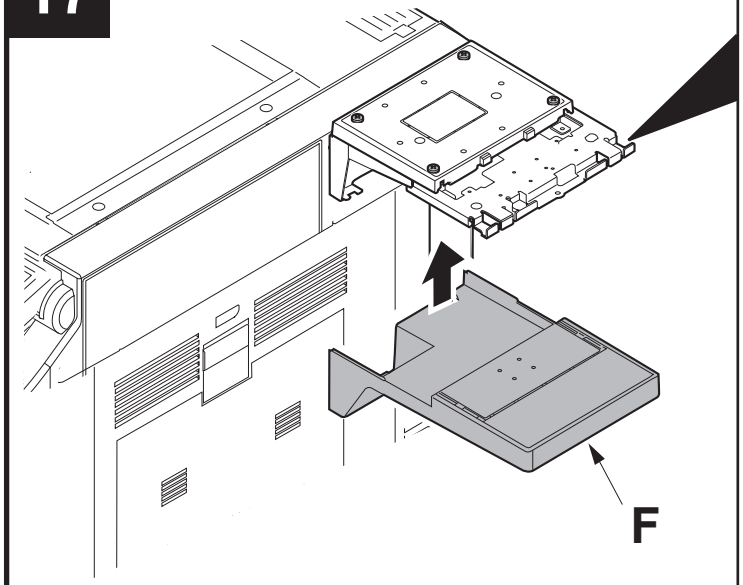

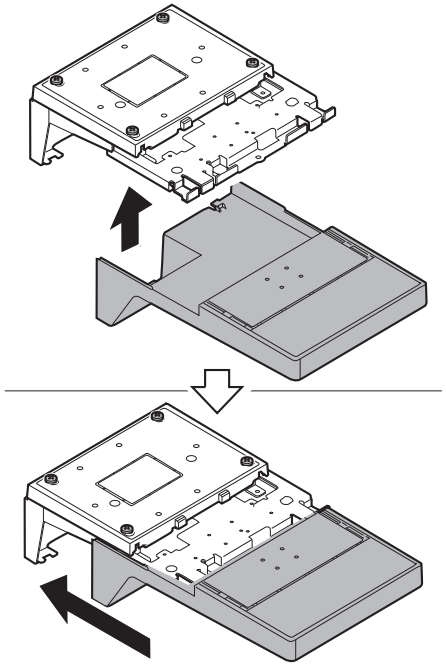

18

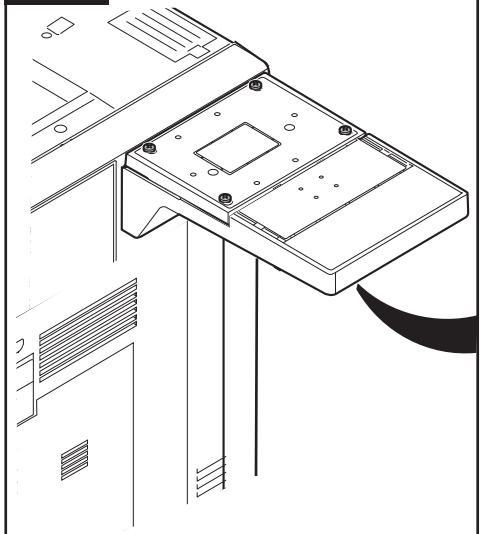

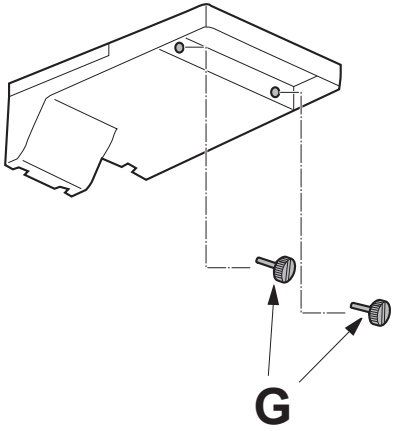

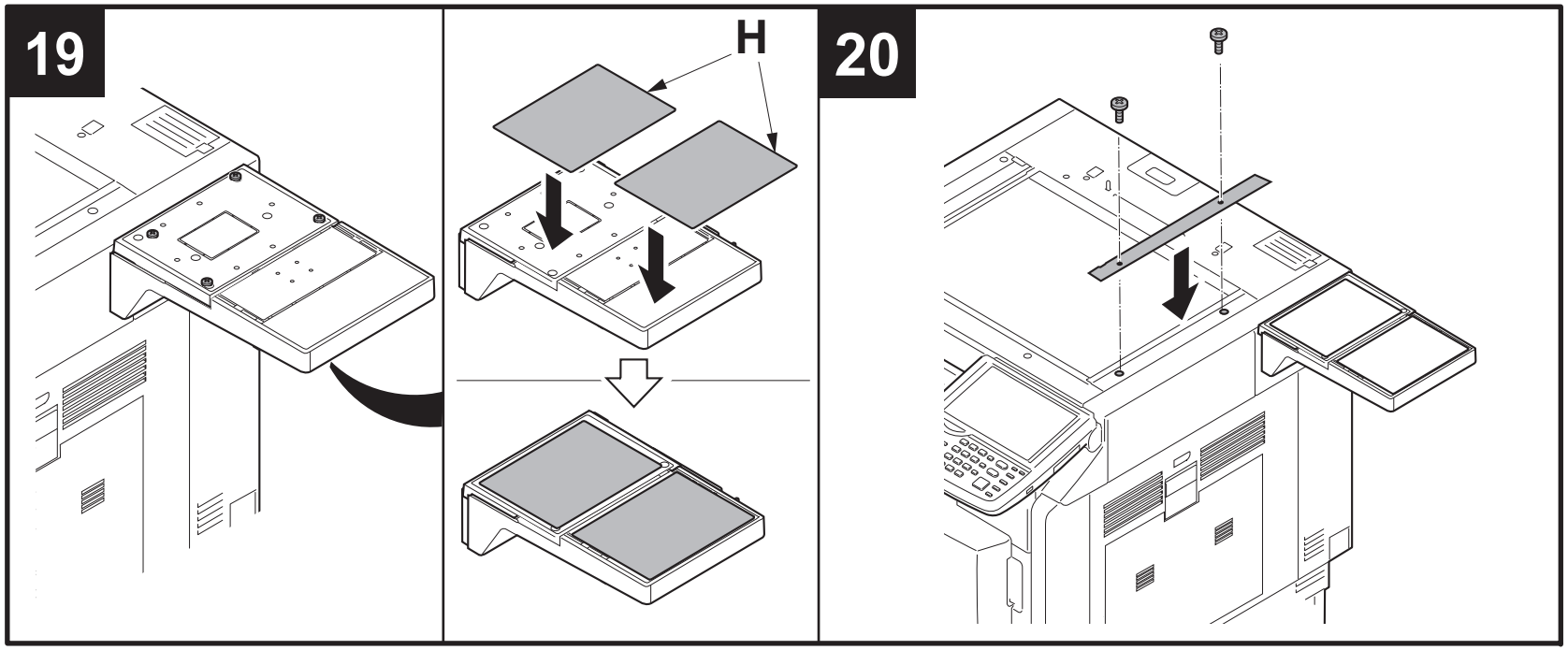
19
H
20

302LC5674001

2013. 5
302LC56740-01

INSTALLATION GUIDE FOR PRINTING SYSTEM

INSTALLATION GUIDE

GUIDE D’INSTALLATION

GUÍA DE INSTALACION

INSTALLATIONSANLEITUNG

GUIDA ALL’INSTALLAZIONE

安装手册

설치안내서

設置手順書

Printing System

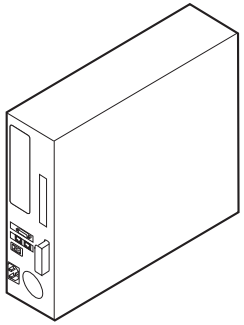

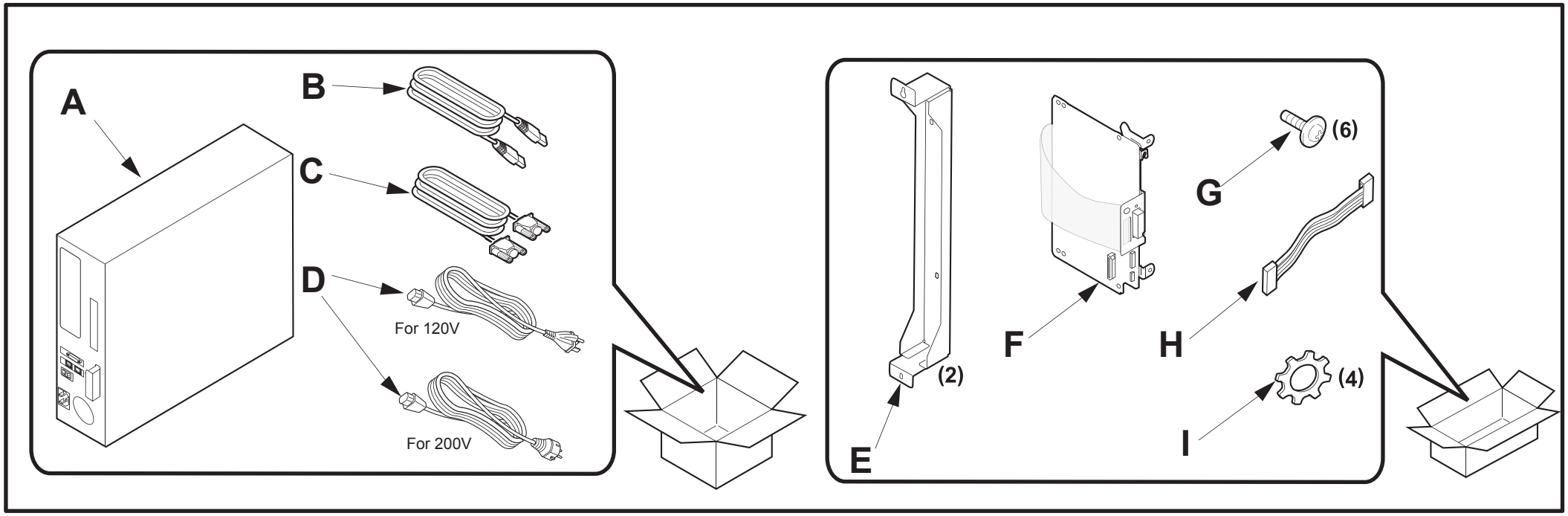
A
B
C
D
For 120V
For 200V
E
(2)
F
G
(6)
H
I
(4)

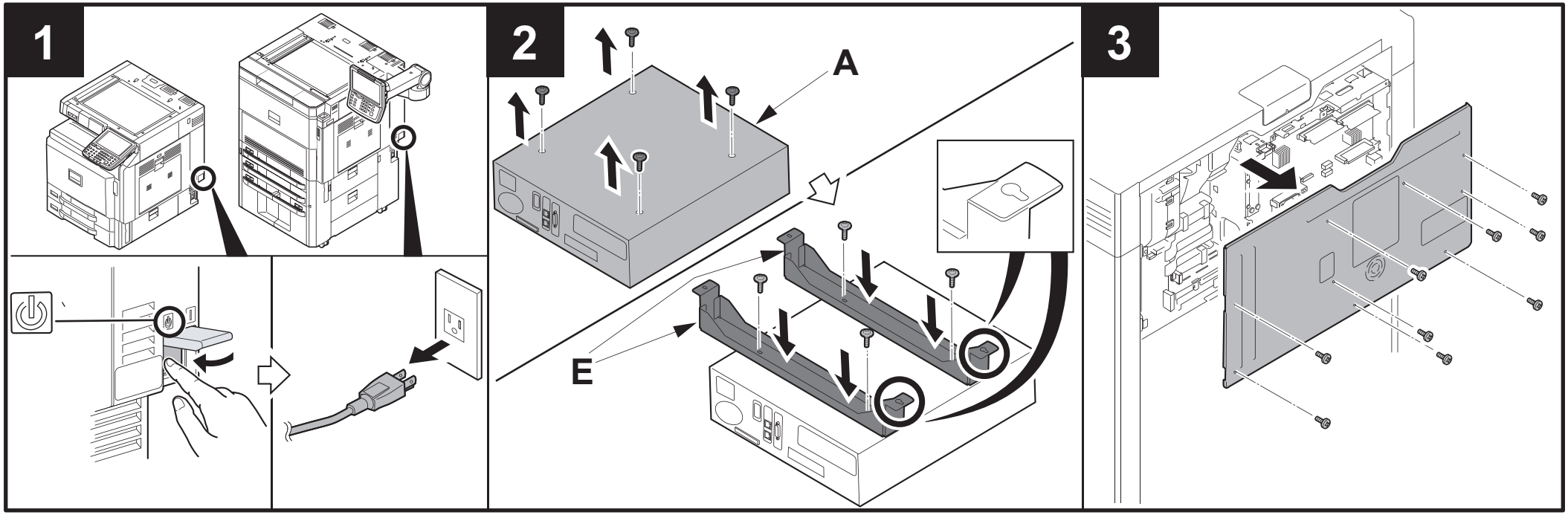
1
2
A
E
3

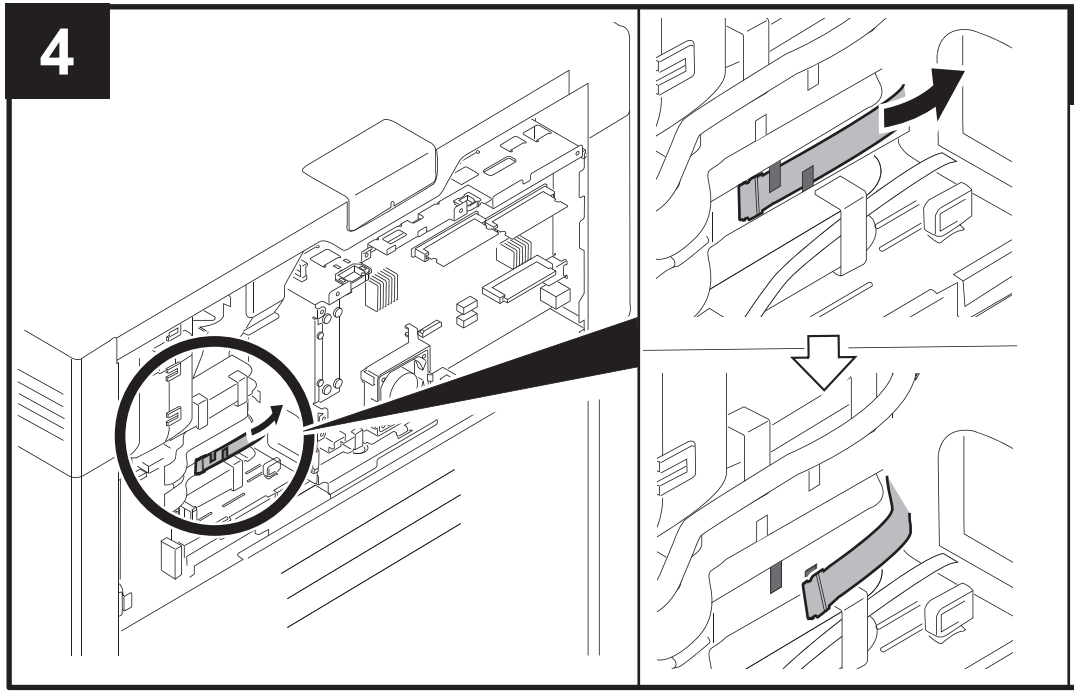
4

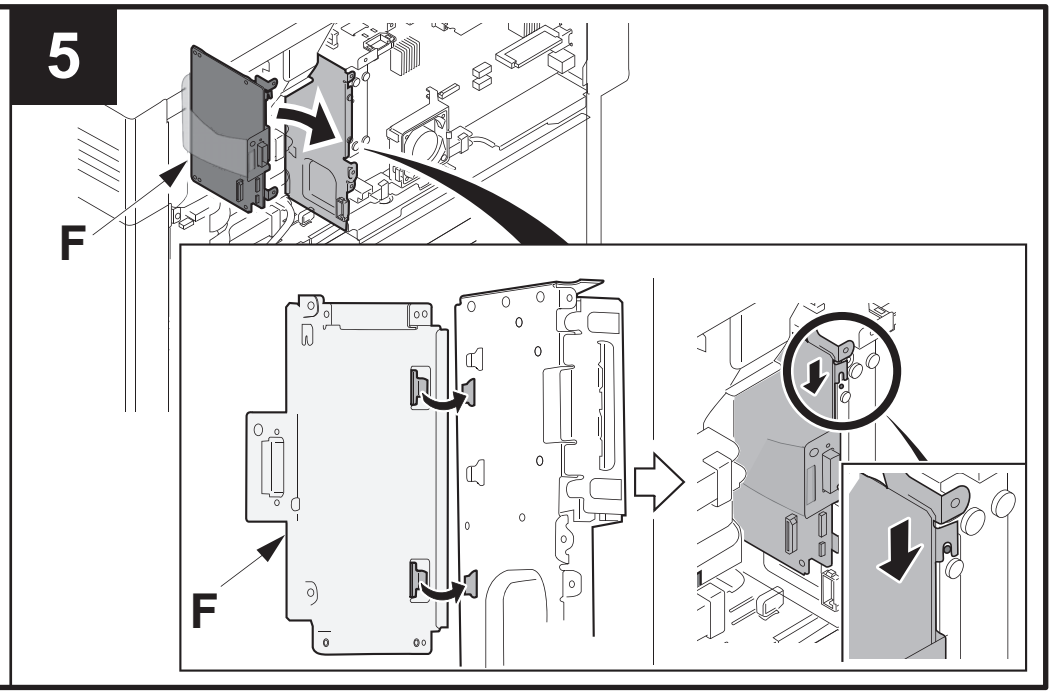
5
F
F

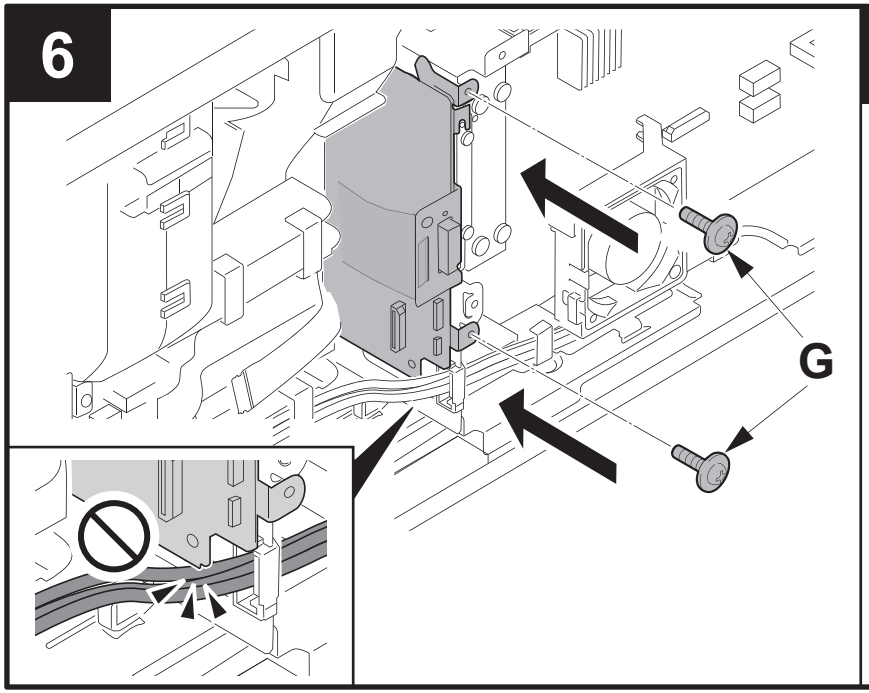
6
G

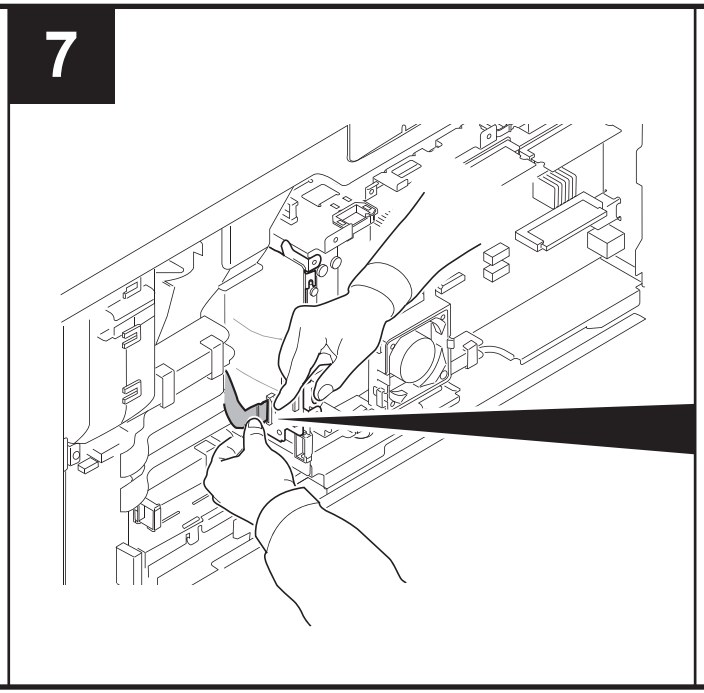
7

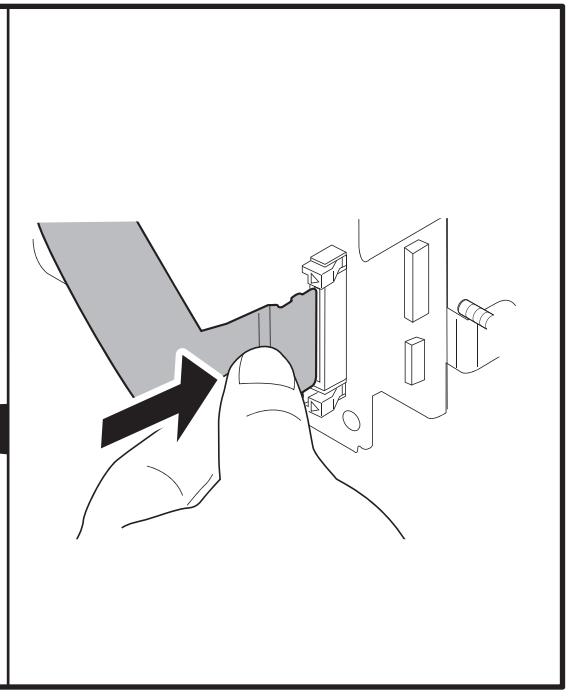

8

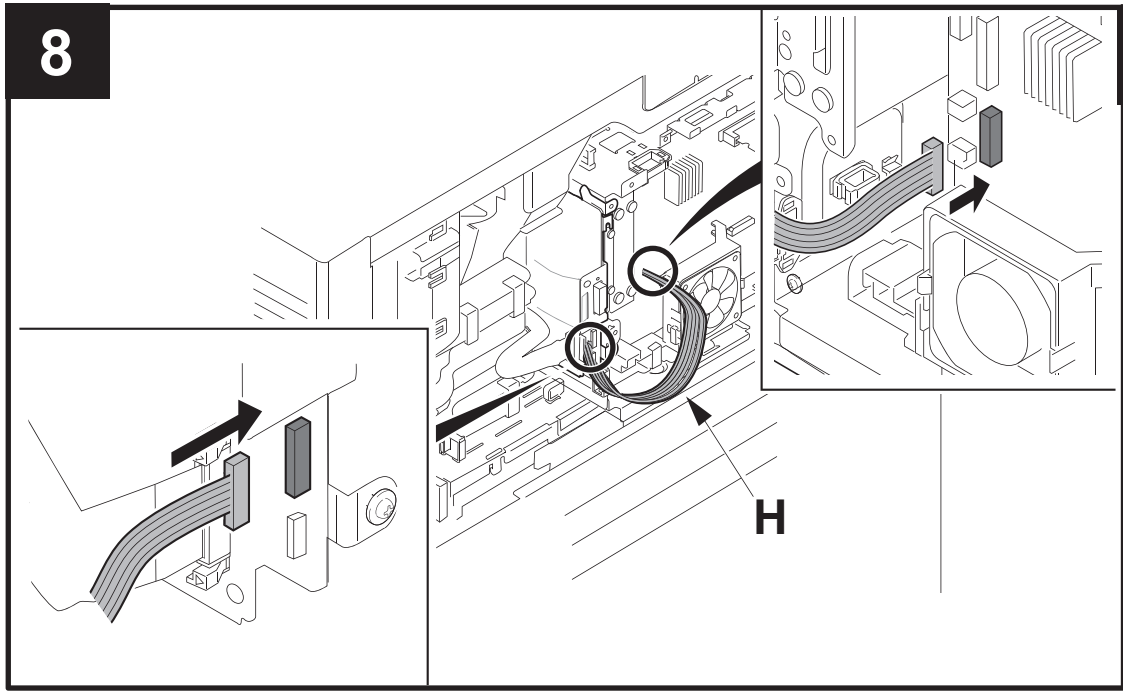

9

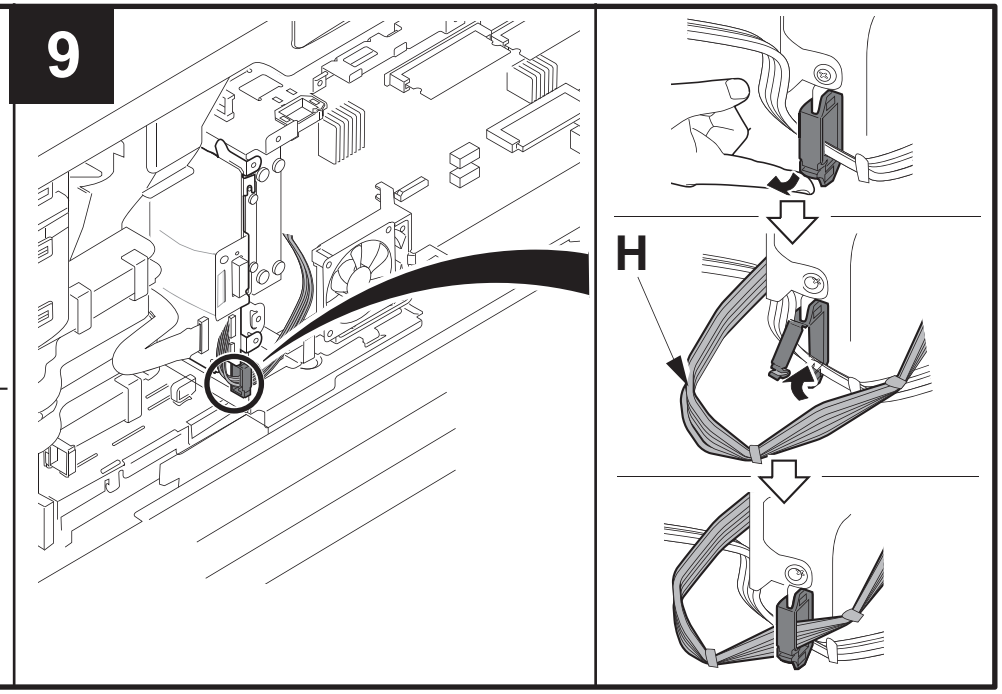

10

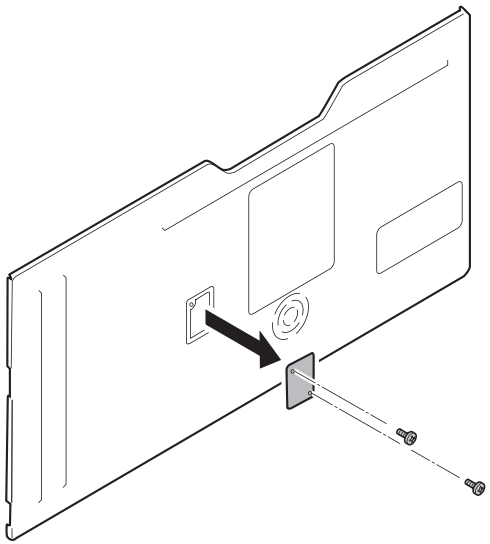

11

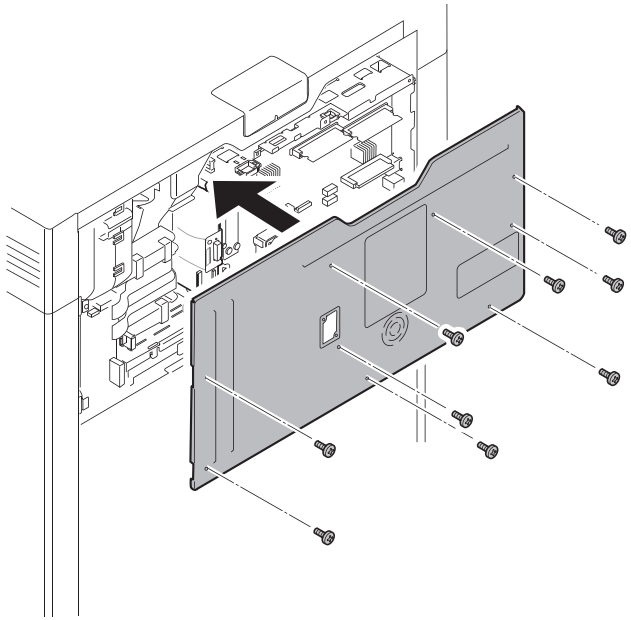

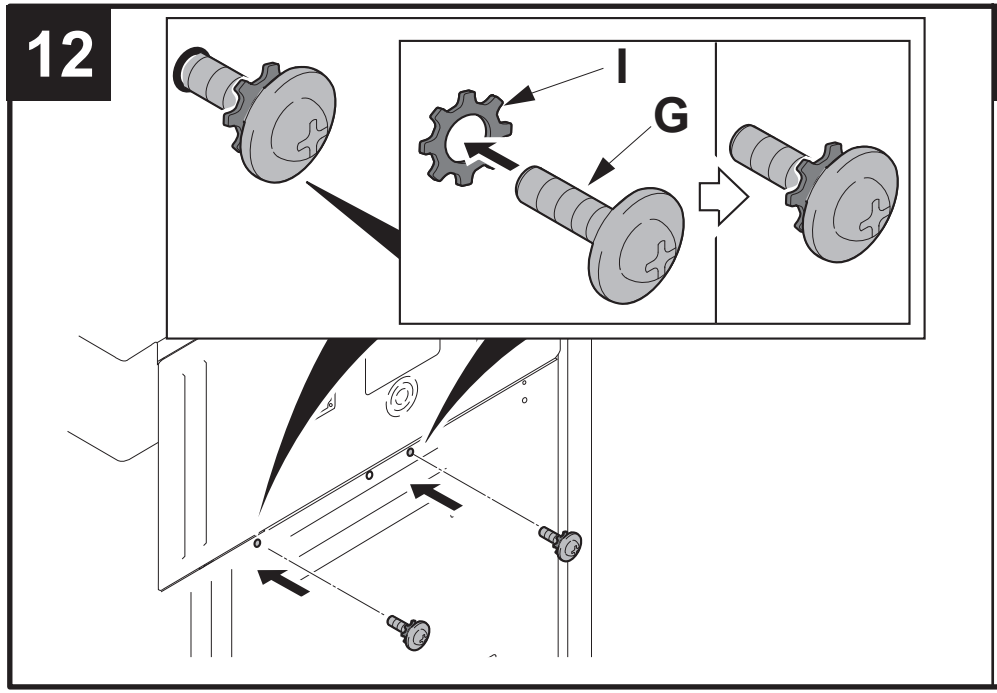
12
I
G

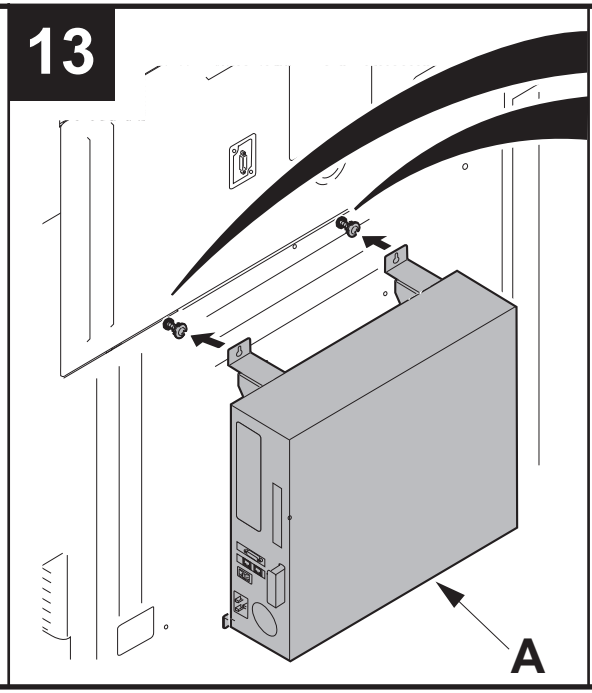
13
A

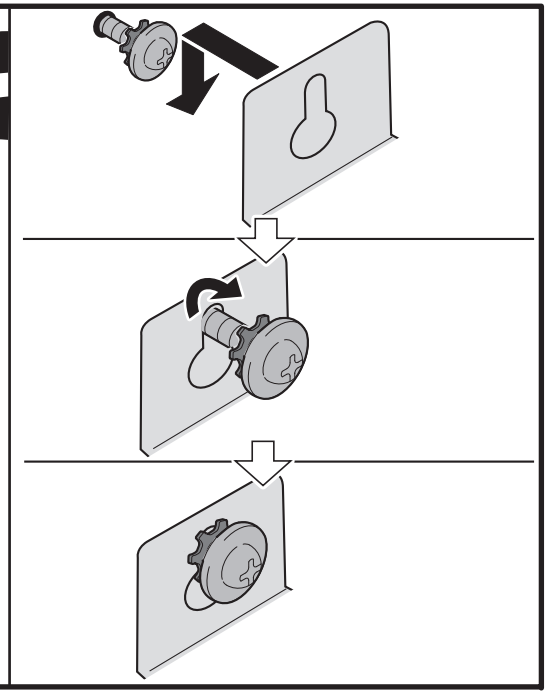

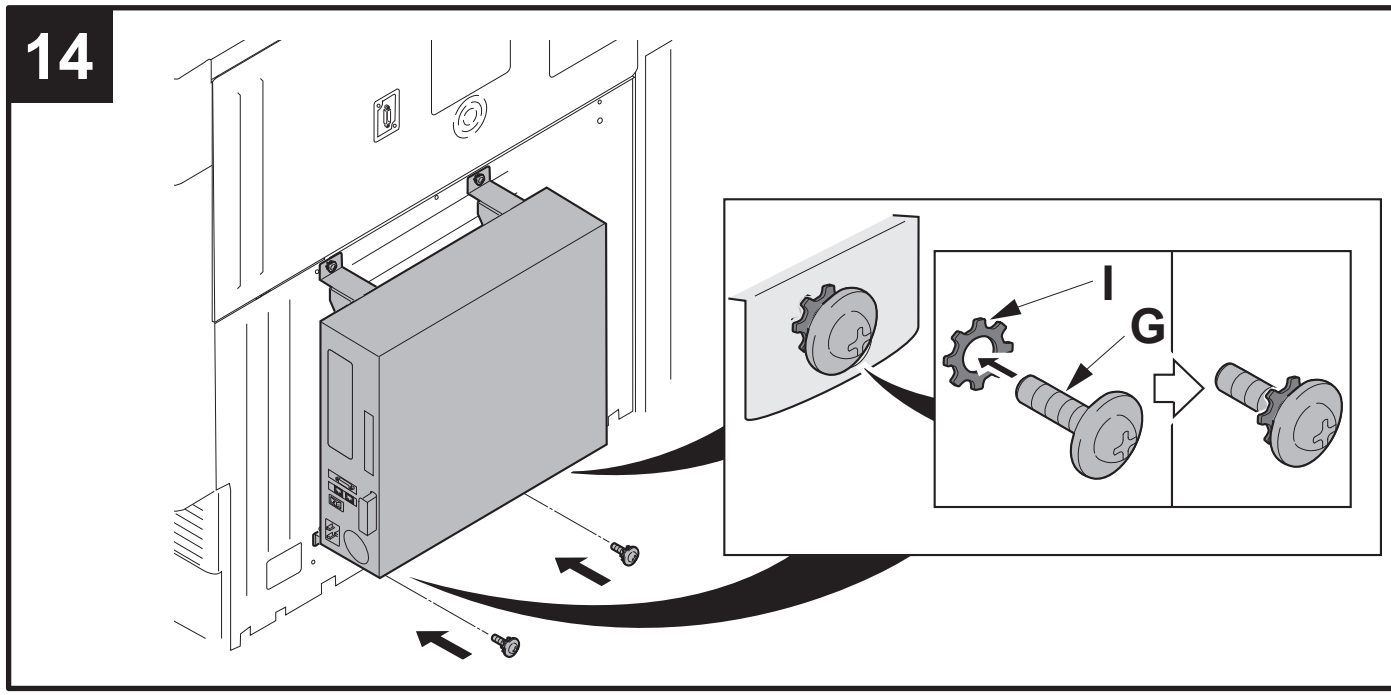
14
I
G

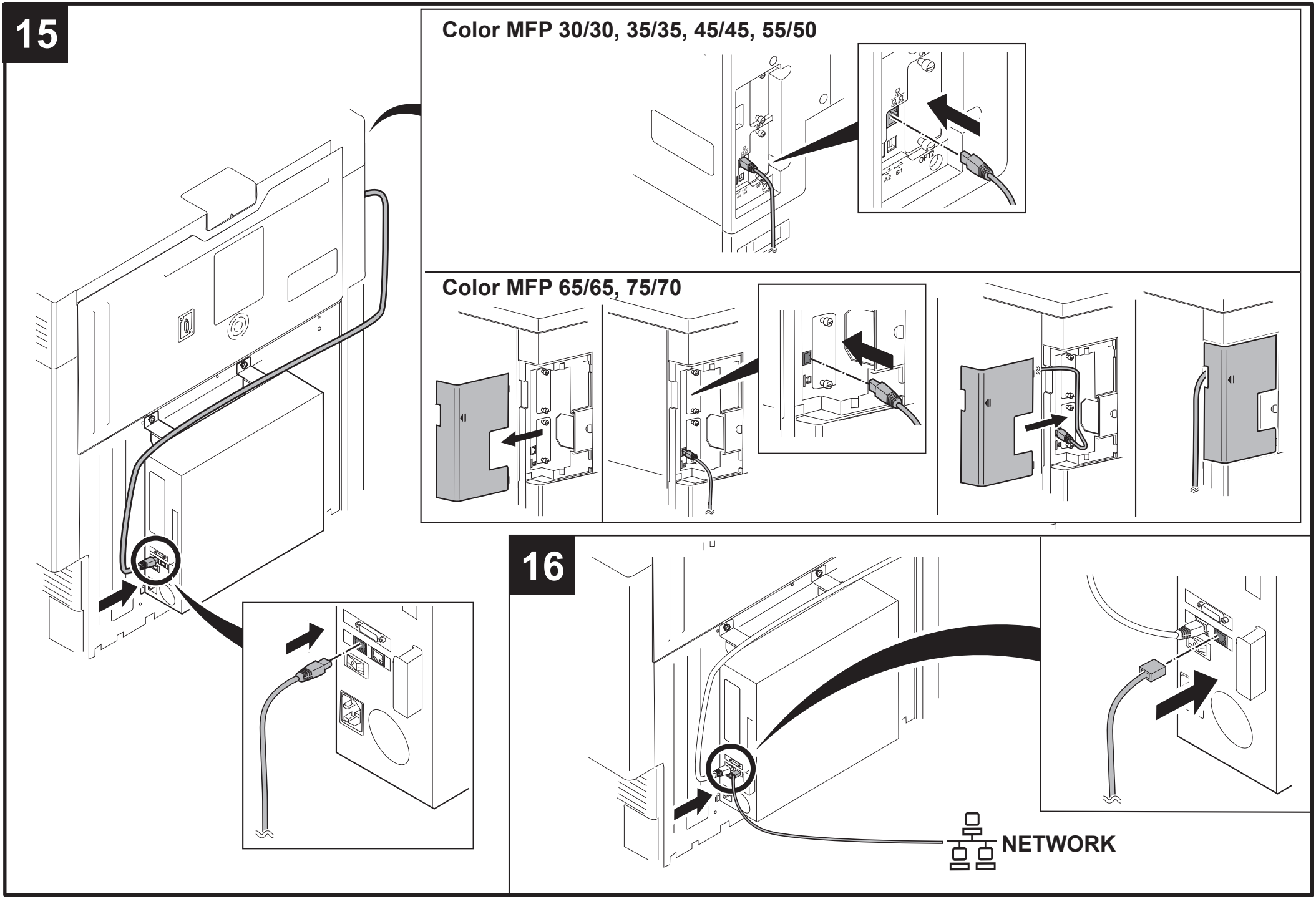
15
Color MFP 30/30, 35/35, 45/45, 55/50
Color MFP 65/65, 75/70
16
NETWORK

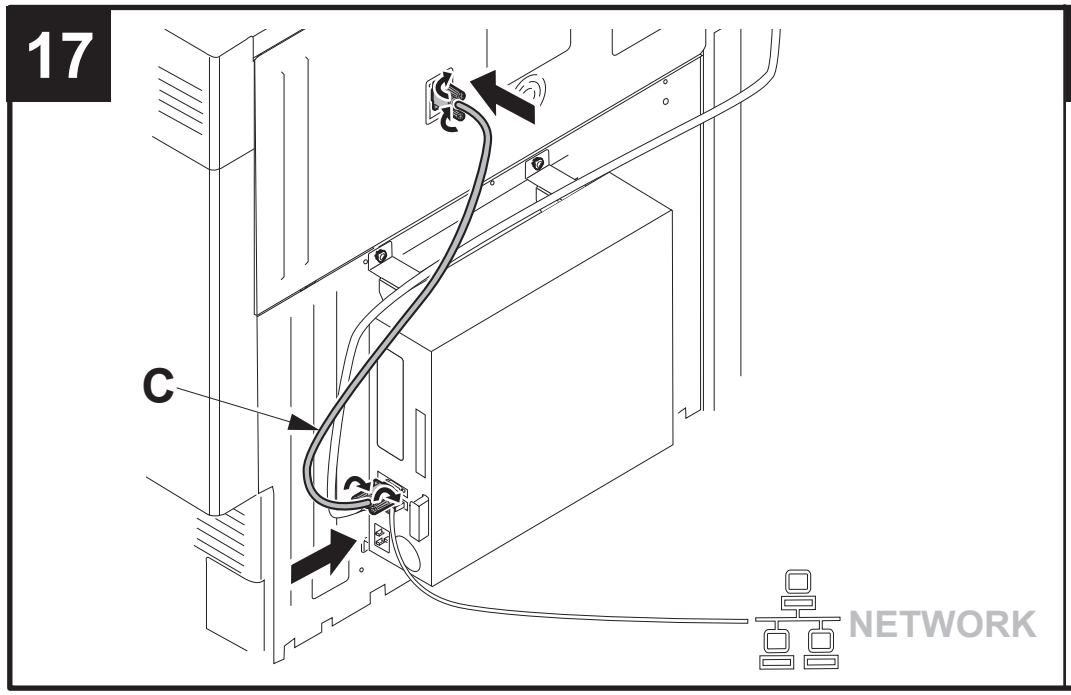
17
C
NETWORK

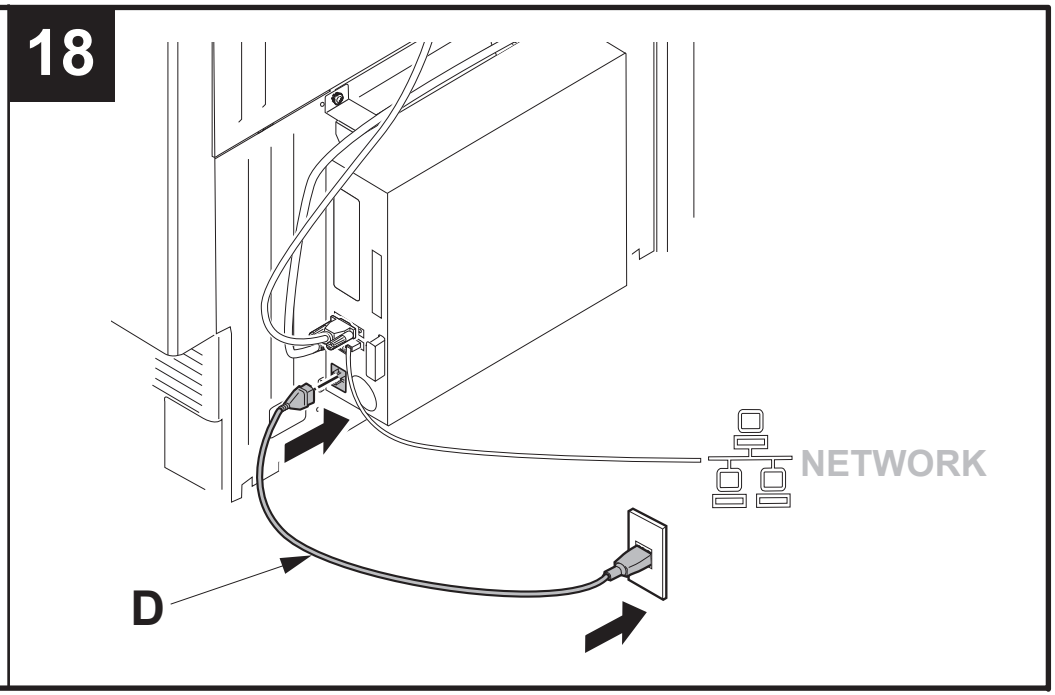
18
NETWORK
D

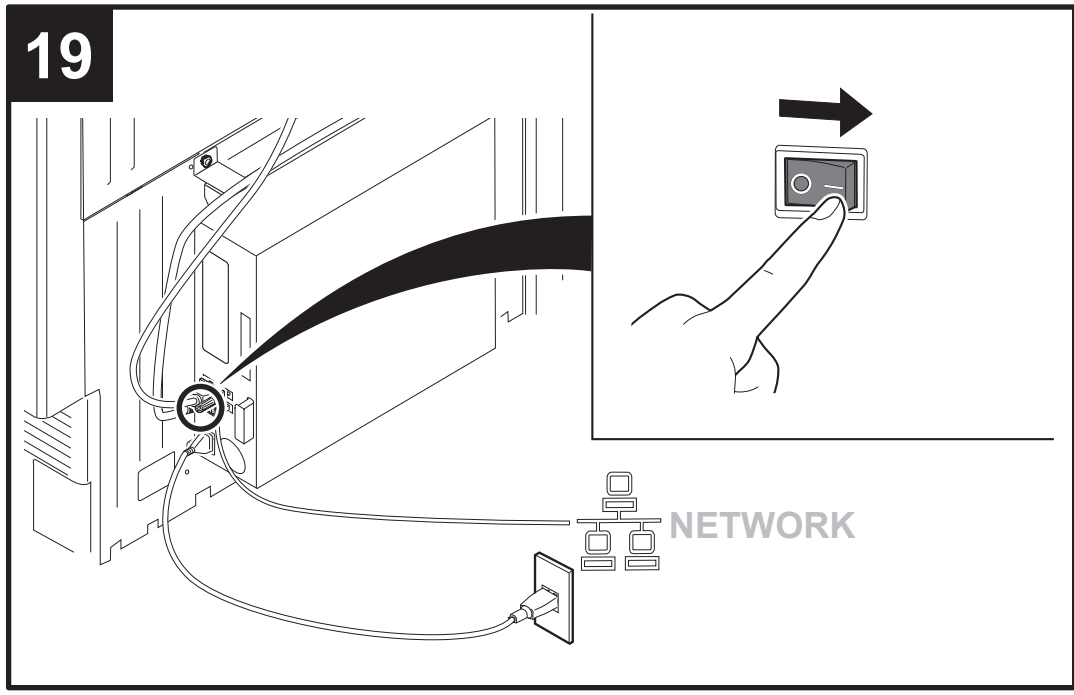
19
NETWORK

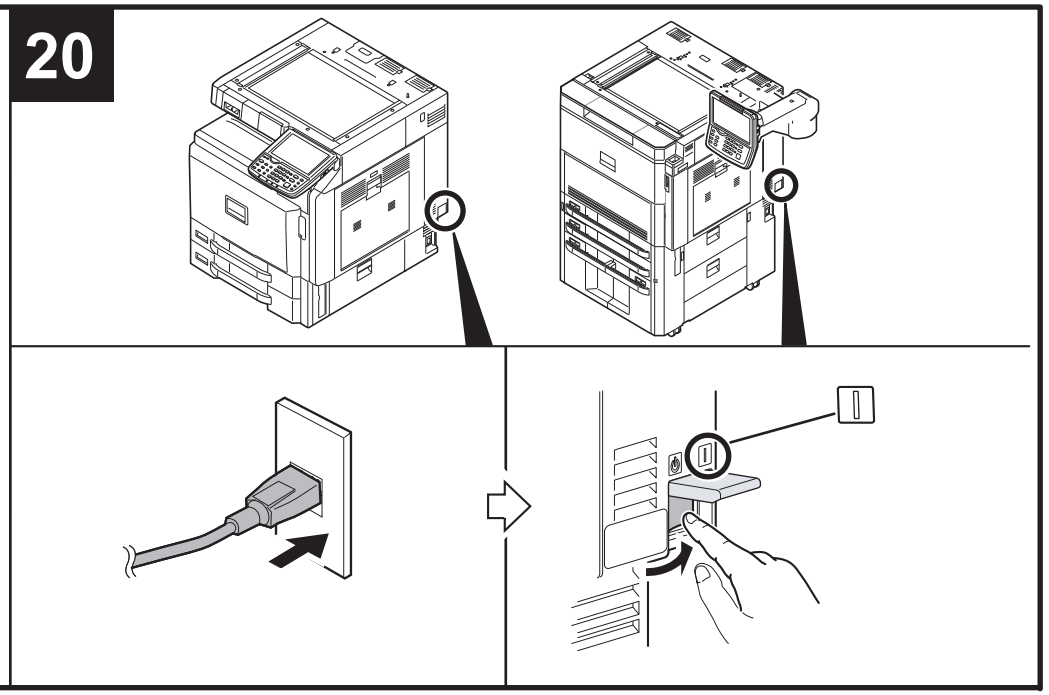
20

303N95671001

2013.1
303N956710-01

Quick Setup
Configuration rapide
Installazione rapida
Installationsübersicht
Configuración rápida
Configuração rápida
Snelle installatie

1

Contact your authorized service/support center to schedule installation of the Fiery hardware.

Hardware installation to be performed by an authorized service technician only. Do not attempt the installation yourself.

The technician will connect the Fiery to the copier/printer and the network, and power on the Fiery.

Contactez le S.A.V. ou le centre de support agréé afin de planifier l'installation du matériel Fiery.

L'installation du matériel doit être effectuée uniquement par un technicien S.A.V. agréé. N'essayez pas de l'installer vous-même.

Le technicien connectera le Fiery au copieur/à l'imprimante et au réseau, puis le mettra sous tension.

Contattare il centro di supporto/assistenza autorizzato per programmare l'installazione dell'hardware Fiery.

L'installazione dell'hardware verrà eseguita esclusivamente da un tecnico del centro di assistenza autorizzato. Non provare ad eseguire l'installazione da soli.

Il tecnico provvederà a collegare Fiery alla fotocopiatrice/stampante e alla rete e quindi ad accendere Fiery.

Vereinbaren Sie einen Termin für die Installation der Fiery Hardware.

Die Fiery Hardware muss von einem autorisierten Servicetechniker installiert werden. Installieren Sie die Hardware nicht selbst! Der Techniker verbindet die Fiery Hardware mit dem Kopierer/Drucker und dem Netzwerk und stellt die Betriebsbereitschaft her.

Contacte con su centro autorizado de servicio/asistencia para planificar la instalación del hardware del Fiery.

La instalación del hardware será realizada únicamente por un técnico de servicio autorizado. No intente realizar la instalación personalmente.

El técnico conectará el Fiery a la copiadora/impresora y la red, y encenderá el Fiery.

Entre em contato com a central de atendimento/suporte autorizada para agendar a instalação do hardware Fiery.

A instalação do hardware deve ser executada apenas por um técnico de manutenção autorizado. Não tente executá-la.

O técnico conectará o Fiery à copiadora/impressora e à rede e ligará o Fiery.

Neem contact op met uw erkende service-/onderhoudsdienst om de installatie van de Fiery-hardware te plannen.

Installatie van hardware mag alleen worden uitgevoerd door een bevoegde onderhoudstechnicus. Probeer de installatie niet zelf uit te voeren.

De technicus sluit de Fiery aan op de kopieermachine/printer en het netwerk, en schakelt de Fiery in.

2

To obtain the Fiery server name, print the Fiery Configuration page.

You will need the server name to configure client computers for printing. See the instructions for printing the Configuration page in the *Welcome* document.

Pour obtenir le nom du serveur Fiery, imprimez la page de configuration Fiery.

Vous aurez besoin du nom du serveur pour configurer les ordinateurs clients pour l'impression. Reportez-vous aux instructions d'impression de la page de configuration dans le document *Bienvenue*.

Stampare la pagina di configurazione per sapere il nome del server Fiery.

Il nome del server sarà necessario per configurare i computer client per la stampa. Vedere le istruzioni per la stampa della pagina di configurazione nel documento Attività preliminari.

Drucken Sie die Fiery Konfigurationsseite; auf ihr ist der Fiery Servername vermerkt.

Sie benötigen den Servernamen zum Einrichten der Druckfunktionalität auf dem Client-Computer; (die Druckanleitung finden Sie im Dokument *Einführung und erste Schritte*).

Para obtener el nombre del servidor Fiery, imprima la página Configuración del Fiery.

Necesitará el nombre del servidor para configurar las computadoras cliente para imprimir. Consulte las instrucciones para imprimir la página Configuración en el documento *Bienvenida*.

Para obter o nome do servidor Fiery, imprima a página de configuração do Fiery.

Você precisará do nome do servidor para configurar os computadores clientes para impressão. Consulte as instruções para imprimir a página de configuração no documento *Bem-vindo*.

Druk de Fiery-configuratiepagina af om de naam van de Fiery-server te verkrijgen.

U hebt de naam van de server nodig om clientcomputers te configureren voor afdrukken. Raadpleeg de instructies voor het afdrukken van de configuratiepagina in het document *Welkom*.

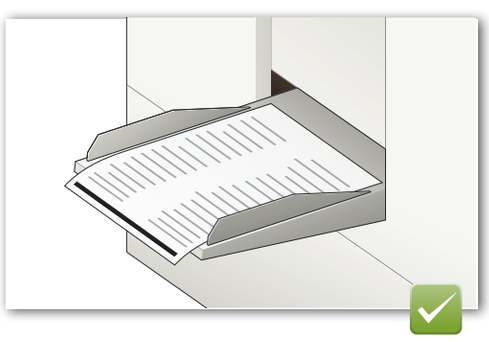

Part Number: 45096407

Microsoft Windows

3

Install Fiery user software on the client computer and configure the client for printing.

Installez les logiciels utilisateur Fiery sur l'ordinateur client et configurez ce dernier pour l'impression.

Installare il software utente Fiery sul computer client e configurare il client per la stampa.

Installieren Sie die Fiery Anwendersoftware auf dem Client und richten Sie ihn zum Drucken ein.

Instale el software del usuario del Fiery en la computadora cliente y configure el cliente para la impresión.

Instale o software do usuário do Fiery no computador cliente e configure o cliente para imprimir.

Installeer Fiery-gebruikerssoftware op de clientcomputer en configureer de client voor afdrukken.

A

1

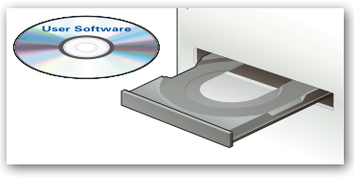

2

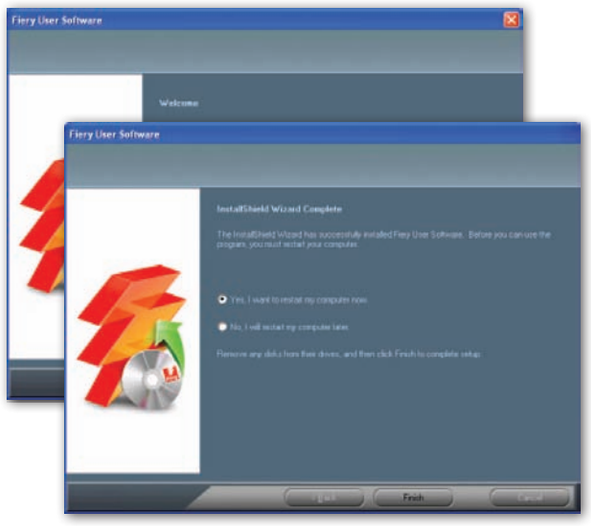

B

Use Point and Print to install the PostScript printer driver.

Utilisez la méthode Pointer-imprimer pour installer le pilote d'imprimante PostScript.

Usare Point and Print per installare il driver di stampa PostScript.

Installieren Sie den PostScript-Druckertreiber per Point-and-Print.

Utilice Apuntar e imprimir para instalar el controlador de impresora PostScript.

Use Apontar e imprimir para instalar o driver de impressora PostScript.

Installeer het PostScript-printerstuurprogramma via point-and-print.

1

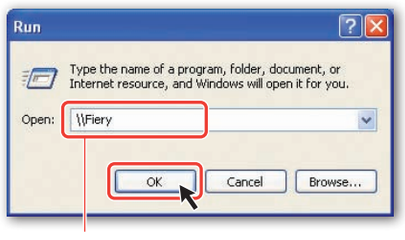

"\\" + Fiery server name
"\\" + nom du serveur Fiery
"\\" + nome del server Fiery
\\ + Fiery Servername
"\\" + nombre del servidor Fiery
"\\" + nome do servidor Fiery
"\\" + naam van Fiery-server

2

Double-click print to add the print connection.
You can add additional connection types later.

Double-cliquez sur print pour ajouter la connexion d'impression.
Vous pourrez ajouter d'autres types de connexion ultérieurement.

Fare doppio clic su print per aggiungere il collegamento di stampa.
Sarà possibile aggiungere altri tipi di collegamenti più avanti.

Doppelklicken Sie auf eine Druckverbindung.
Weitere Verbindungen sind später ergänzbar.

Haga doble clic en "print" para agregar la conexión de impresión.
Puede agregar otros tipos de conexión más adelante.

Clique duas vezes em print para adicionar a conexão de impressão.
É possível incluir tipos de conexão adicionais posteriormente.

Dubbelklik op print om de afdrukverbinding toe te voegen.
U kunt later aanvullende verbindingstypen toevoegen.

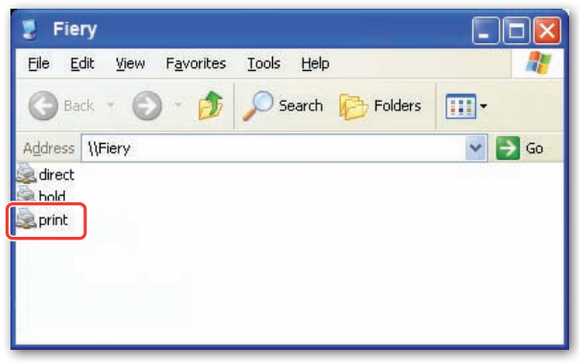

- **direct** Jobs are printed, but not stored.
- **hold** Jobs are spooled and stored for later printing.
- **print** Jobs are printed and stored.

- **direct** Les tâches sont imprimées mais pas stockées.
- **hold** Les tâches sont spoulées et stockées pour impression ultérieure.
- **print** Les tâches sont imprimées et stockées.

- **direct** I lavori vengono stampati, ma non memorizzati.
- **hold** I lavori vengono inviati in spool per essere stampati più tardi.
- **print** I lavori vengono stampati e memorizzati.

- **Direkt** Aufträge drucken, aber nicht speichern.
- **Halten** Aufträge für spätere Druckausgabe spoolen.
- **Drucken** Aufträge drucken und speichern.

- **direct** Los trabajos se imprimen pero no se guardan.
- **hold** Los trabajos se almacenan en la cola y se guardan para imprimirlos posteriormente.
- **print** Los trabajos se imprimen y se guardan.

- **direct** As tarefas são impressas, mas não são armazenadas.
- **hold** As tarefas são passadas pelo spool e armazenadas para impressão posteriormente.
- **print** As tarefas são impressas e armazenadas.

- **direct** Taken worden afgedrukt, maar niet opgeslagen.
- **hold** Taken worden in de wachtrij geplaatst en opgeslagen om deze later af te drukken.
- **print** Taken worden afgedrukt en opgeslagen.

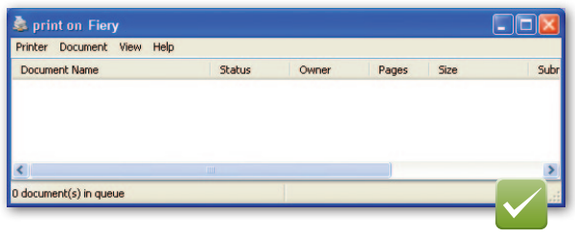

3

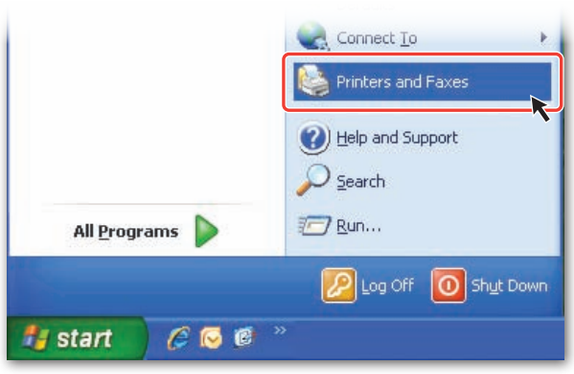

4

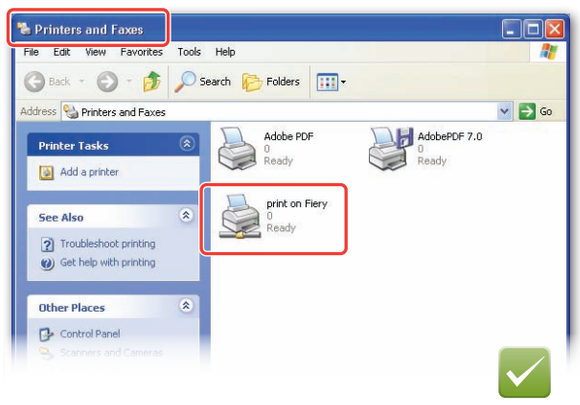

C

Update the printer driver to add the installed options.

Effectuez la mise à jour du pilote d'imprimante pour ajouter les options installées.

Aggiornare il driver di stampa per aggiungere le opzioni installate.

Aktualisieren Sie den Druckertreiber, damit die installierbaren Optionen hinzugefügt werden.

Actualice el controlador de impresora para agregar las opciones instaladas.

Atualize o driver da impressora para adicionar as opções instaladas.

Werk het printerstuurprogramma bij om de geïnstalleerde opties toe te voegen.

1

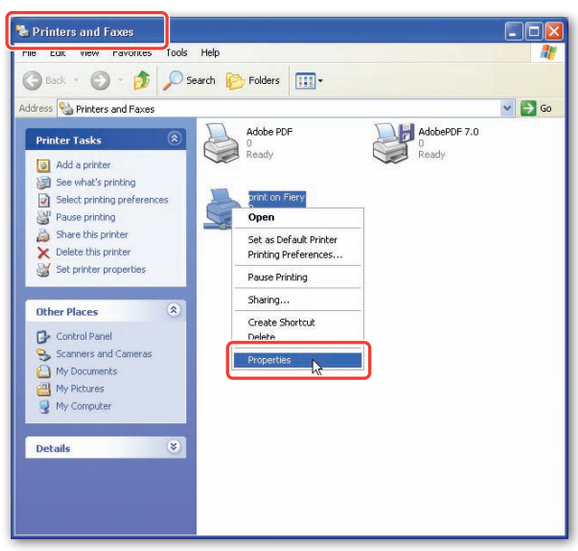

2

Configuration or Installable Options
Configuration ou options d'installation
Configurazione o Opzioni installabili
Seite "Konfiguration" / "Installierbare Optionen"
Configuración u Opciones instalables
Configuração ou Opções instaláveis
Configuratie of Installeerbare opties

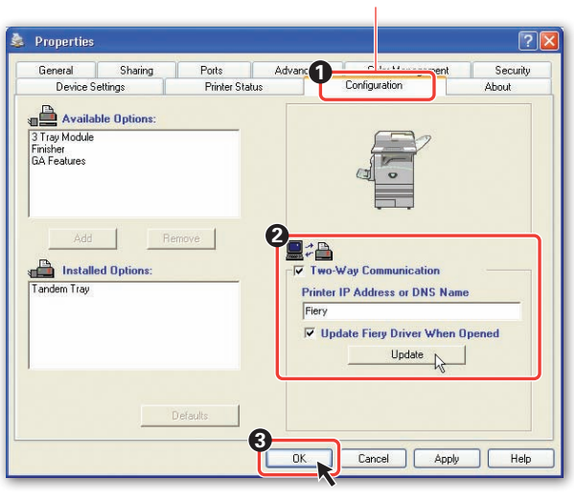

If these settings are unavailable, ask your network administrator to update the driver with the installed options.

Si ces paramètres ne sont pas disponibles, demandez à votre administrateur système de mettre à jour le pilote pour inclure les options installées.

Se queste impostazioni non sono disponibili, chiedere all'amministratore della rete di aggiornare il driver con le opzioni installate.

Bitten Sie, falls diese Einstellungen nicht verfügbar sind, den Netzwerkadministrator, die installierten Optionen im Originaldruckertreiber hinzuzufügen.

Si estos valores no están disponibles, pida a su administrador de red que actualice el controlador con las opciones instaladas.

Se essas configurações não estiverem disponíveis, peça ao administrador de rede para atualizar o driver com as opções instaladas.

Als deze instellingen niet beschikbaar zijn, vraagt u de netwerkbeheerder het stuurprogramma bij te werken met de geïnstalleerde opties.

4

Open and print a sample PDF job.

Ouvrez et imprimez un document PDF en guise d'échantillon.

Aprire un file PDF di prova e stamparlo.

Öffnen Sie ein PDF-Dokument und drucken Sie es.

Abra e imprima un archivo PDF de ejemplo.

Abra e imprima uma tarefa PDF de amostra.

Open een PDF-voorbeeldtaak en druk deze af.

A

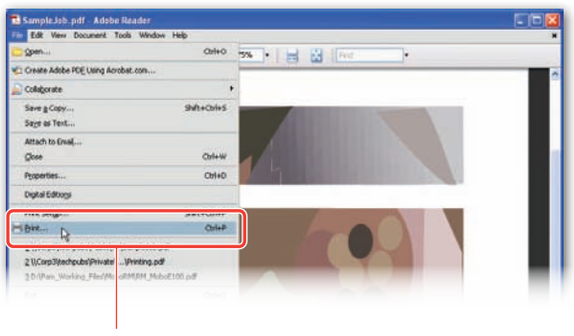

Print	Imprimir
Imprimer	Imprimir
Stampa	Afdrukken
Drucken	

B

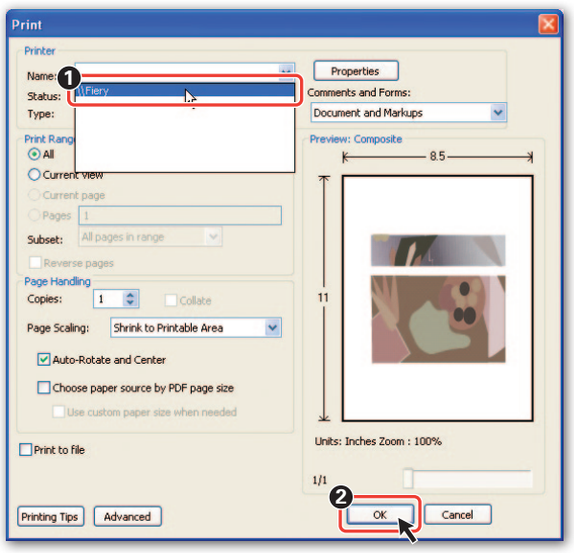

C

3

Install Fiery user software on the client computer and configure the client for printing.

Installez les logiciels utilisateur Fiery sur l'ordinateur client et configurez ce dernier pour l'impression.

Installare il software utente Fiery sul computer client e configurare il client per la stampa.

Installieren Sie die Fiery Anwendersoftware auf dem Client und richten Sie ihn zum Drucken ein.

Instale el software del usuario del Fiery en la computadora cliente y configure el cliente para la impresión.

Instale o software do usuário do Fiery no computador cliente e configure o cliente para imprimir.

Installeer Fiery-gebruikerssoftware op de clientcomputer en configureer de client voor afdrukken.

A

1

Quit all open applications.

Fermez toutes les applications ouvertes.

Chiudere tutte le applicazioni aperte.

Beenden Sie alle Anwendungsprogramme.

Salga de todas las aplicaciones que estén abiertas.

Saia de todos os aplicativos abertos.

Sluit alle geopende toepassingen af.

2

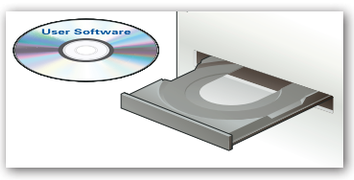

3

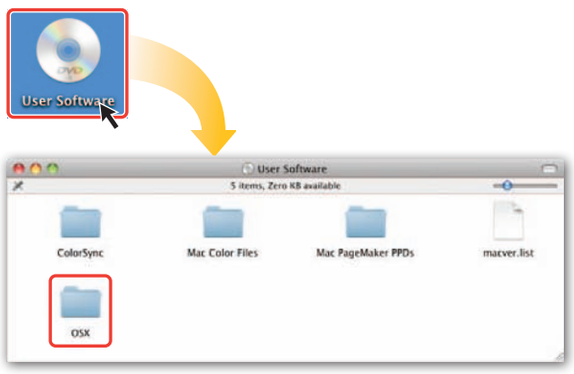

4

Double-click CWS5.mpkg to start the Command WorkStation installer.

Double-cliquez sur CWS5.mpkg pour lancer le programme d'installation de la Command WorkStation.

Fare doppio clic su CWS5.mpkg per avviare il programma di installazione di Command WorkStation.

Doppelklicken Sie zum Installieren der Command WorkStation Software auf die Datei "CWS5.mpkg".

Haga doble clic en CWS5.mpkg para iniciar el instalador de Command WorkStation.

Clique duas vezes em CWS5.mpkg para iniciar o instalador da Command WorkStation.

Dubbelklik op CWS5.mpkg om het installatieprogramma voor Command WorkStation te starten.

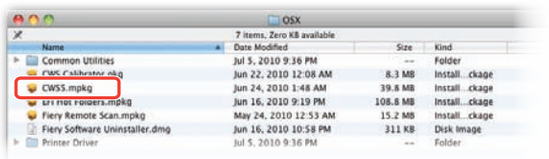

5

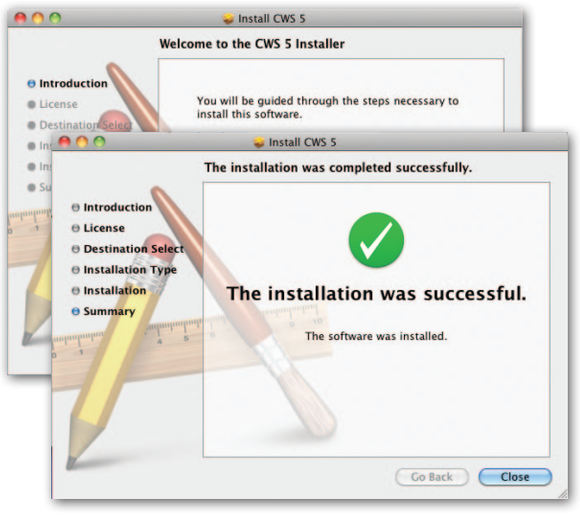

6

Double-click the .mpkg installer for any other software utility that you want to install.

Si vous voulez installer un autre utilitaire, double-cliquez sur le programme d'installation .mpkg correspondant.

Fare doppio clic sul programma di installazione .mpkg per ogni altro programma di utilità che si desidera installare.

Doppelklicken Sie zum Installieren einer anderen Komponente auf die jeweilige ".mpkg"-Datei.

Haga doble clic en el instalador .mpkg de cualquier otra utilidad de software que desee instalar.

Clique duas vezes no instalador do .mpkg para qualquer outro utilitário de software que você desejar instalar.

Dubbelklik op het installatieprogramma (.mpkg) voor eventuele andere hulpprogramma's die u wilt installeren.

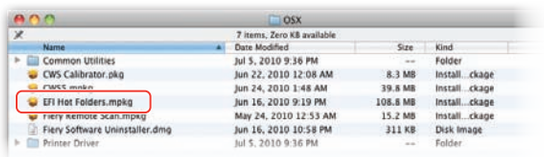

B

Install the printer driver.

Installez le pilote d'imprimante.

Installare il driver di stampa.

Installieren Sie den Druckertreiber.

Instale el controlador de impresora.

Instale o driver da impressora.

Installeer het printerstuurprogramma.

1

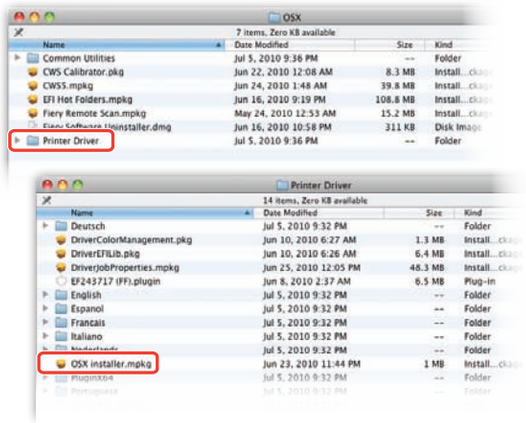

2

3

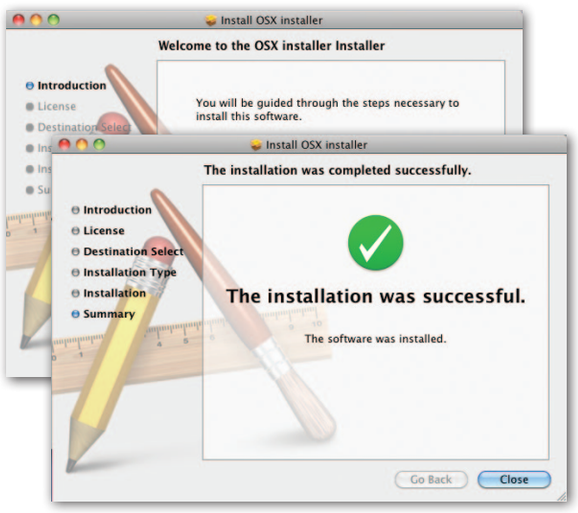

C

Set up the print connection.

Configurez la connexion d'impression.

Configurare il collegamento di stampa.

Richten Sie die Druckverbindung ein.

Configure la conexión de impresión.

Configure a conexão de impressão.

Stel de afdrukverbinding in.

1

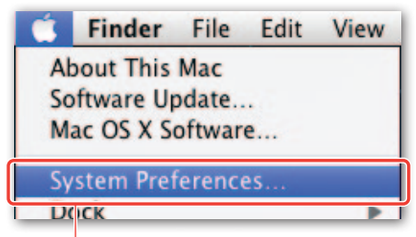

System Preferences
Préférences système
Preferenze di Sistema
Systemeinstellungen
Preferencias del sistema
Preferências do sistema
Systeemvoorkeuren

2

3

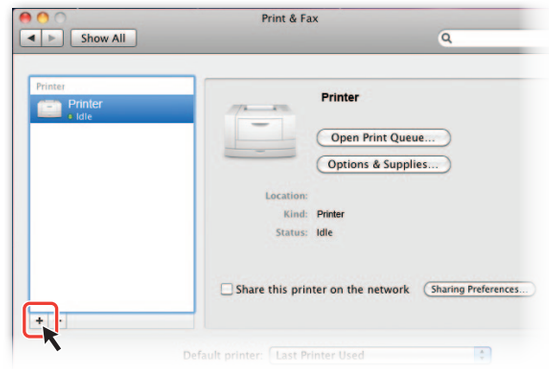

4

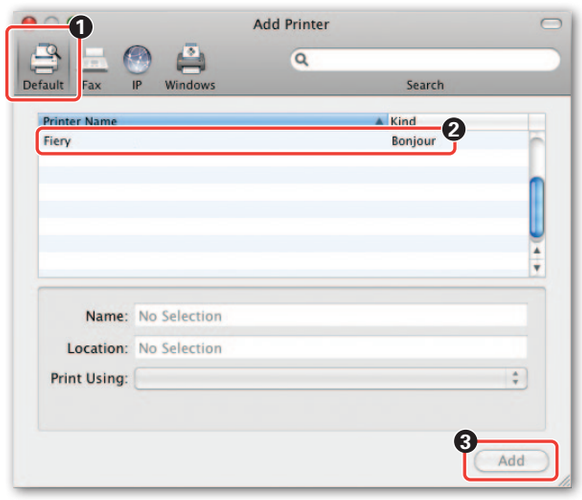

5

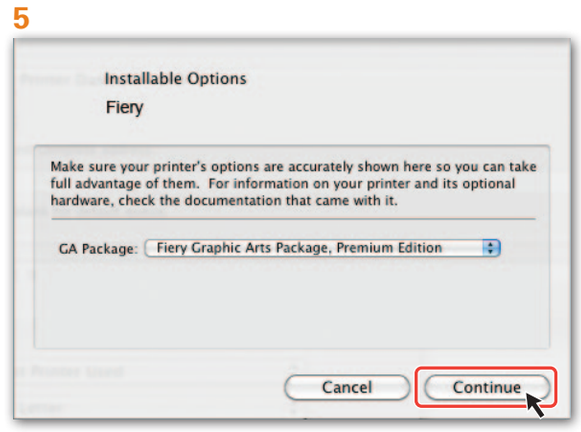

6

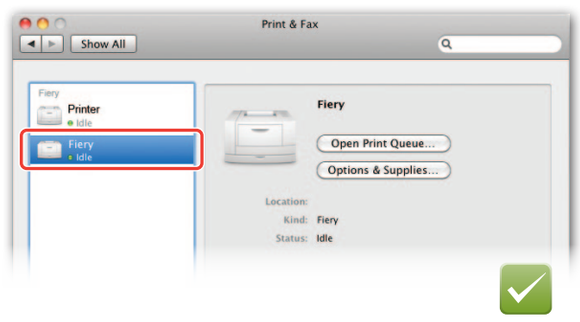

4

Update the printer driver to add the installed options by opening and printing a sample PDF job.

Effectuez la mise à jour du pilote d'imprimante pour ajouter les options installées lors de l'ouverture et de l'impression d'un échantillon PDF.

Aggiornare il driver di stampa per aggiungere le opzioni installate aprendo e stampando un file PDF di prova.

Drucken Sie ein PDF-Dokument, um im Druckertreiber die Installationsoptionen hinzuzufügen.

Actualice el controlador de impresora para agregar las opciones instaladas. Para ello, abra e imprima un trabajo PDF de ejemplo.

Atualize o driver da impressora para adicionar as opções instaladas abrindo e imprimindo uma tarefa PDF de amostra.

Werk het printerstuurprogramma bij om de geïnstalleerde opties toe te voegen door een PDF-voorbeeldtaak te openen en af te drukken.

A

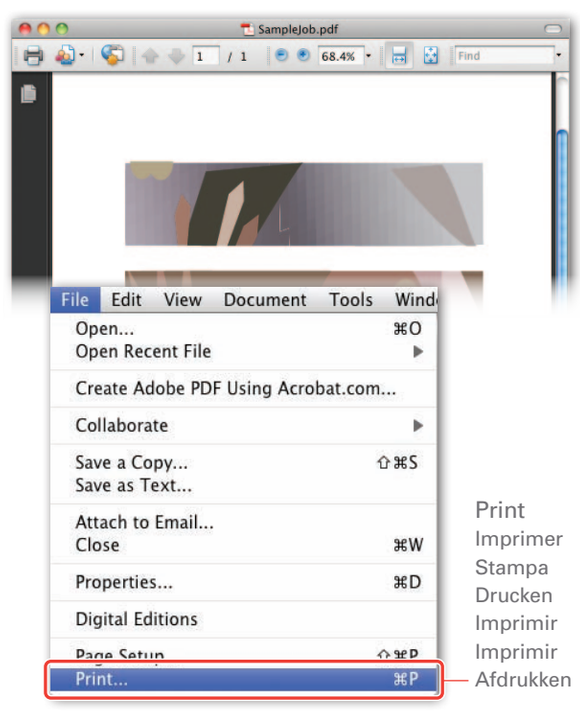

Print
Imprimer
Stampa
Drucken
Imprimir
Imprimir
Afdrukken

B

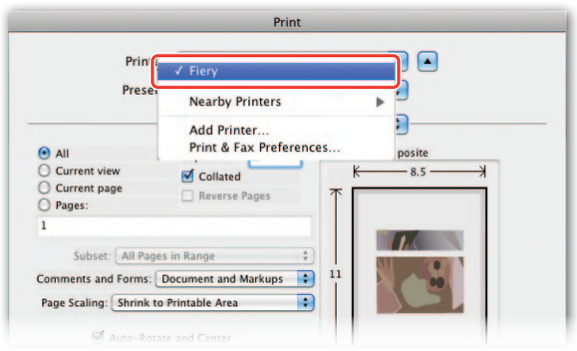

C

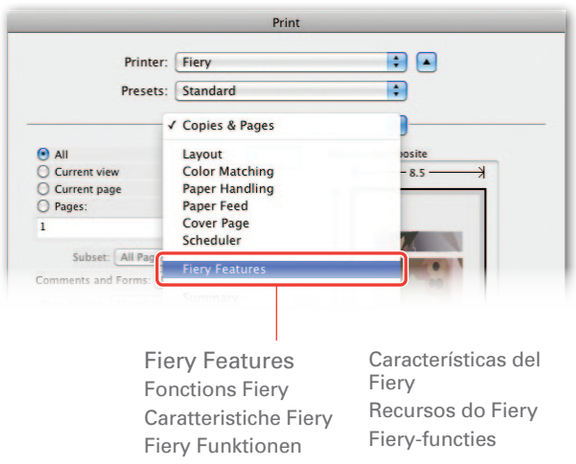

Fiery Features
Fonctions Fiery
Caratteristiche Fiery
Fiery Funktionen

Características del Fiery
Recursos do Fiery
Fiery-functies

D

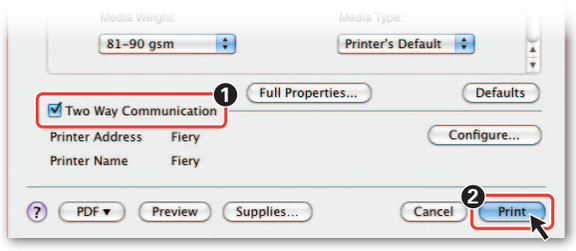

E

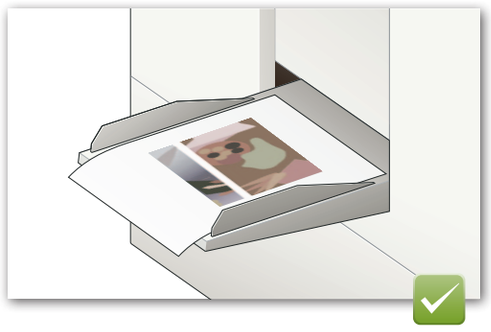

Congratulations! You have successfully installed and set up your Fiery. You can now begin using the Fiery for all of your network printing jobs.

For more assistance with the Fiery, contact your authorized service/support center. For more information about Fiery products, visit www.efi.com.

Félicitations ! Vous avez correctement installé et configuré votre Fiery. Vous pouvez maintenant utiliser le Fiery pour toutes vos tâches d'impression réseau.

Pour obtenir une assistance complémentaire concernant le Fiery, contactez le S.A.V. ou le centre de support agréé. Pour plus d'informations sur les produits Fiery, rendez-vous sur www.efi.com.

Complimenti! L'installazione e la configurazione di Fiery sono state completate. Ora è possibile iniziare a usare Fiery per tutti i lavori di stampa in rete.

Per avere assistenza per Fiery, contattare il centro di supporto/assistenza autorizzato. Per ulteriori informazioni sui prodotti Fiery, visitare il sito www.efi.com.

Herzlichen Glückwunsch! Ihre Fiery Lösung wurde erfolgreich installiert und eingerichtet. Sie können nun Ihre Dokumente über das Netzwerk drucken.

Wenden Sie sich bei Fragen zu Ihrer Fiery Lösung an Ihren autorisierten Support- und Servicepartner. Weitere Informationen über Fiery Produkte finden Sie auf der Website www.efi.com.

¡Enhorabuena! Ha instalado y configurado correctamente su Fiery. Ahora puede empezar a utilizar el Fiery para todos sus trabajos de impresión en red.

Para obtener más asistencia para el Fiery, póngase en contacto con su centro autorizado de servicio/asistencia. Para obtener más información acerca de los productos Fiery, visite www.efi.com.

Parabéns! Você instalou e configurou o Fiery com êxito. Agora você pode começar a usar o Fiery para todas as tarefas de impressão da rede.

Para obter mais assistência com o Fiery, entre em contato com a central de atendimento/suporte autorizada. Para obter mais informações sobre os produtos Fiery, visite www.efi.com.

Gefeliciteerd! Uw Fiery is geïnstalleerd en ingesteld. U kunt de Fiery vanaf nu gebruiken voor al uw netwerkafdruktaken.

Neem contact op met uw erkende service-/onderhoudsdienst voor meer ondersteuning voor de Fiery. Raadpleeg www.efi.com voor meer informatie over Fiery-producten.

Copyright 2010 © Electronics for Imaging, Inc.

KYOCERA Document Solutions America, Inc.
Headquarters
225 Sand Road,
Fairfield, New Jersey 07004-0008, USA
Phone: +1-973-808-8444
Fax: +1-973-882-6000

Latin America
8240 NW 52nd Terrace Dawson Building, Suite 100
Miami, Florida 33166, USA
Phone: +1-305-421-6640
Fax: +1-305-421-6666

KYOCERA Document Solutions Canada, Ltd.
6120 Kestrel Rd., Mississauga, ON L5T 1S8,
Canada
Phone: +1-905-670-4425
Fax: +1-905-670-8116

KYOCERA Document Solutions
Mexico, S.A. de C.V.
Calle Arquimedes No. 130, 4 Piso, Colonia Polanco
Chapultepec, Delegacion Miguel Hidalgo,
Distrito Federal, C.P. 11560, México
Phone: +52-555-383-2741
Fax: +52-555-383-7804

KYOCERA Document Solutions Brazil, Ltda.
Alameda África, 545, Pólo Empresarial Consbrás,
Tamboré, Santana de Parnaíba, State of São Paulo, CEP
06543-306, Brazil
Phone: +55-11-2424-5353
Fax: +55-11-2424-5304

KYOCERA Document Solutions Chile SpA
Jose Ananias 505, Macul. Santiago, Chile
Phone: +562-2350-7000
Fax: +562-2350-7150

KYOCERA Document Solutions
Australia Pty. Ltd.
Level 3, 6-10 Talavera Road North Ryde N.S.W, 2113,
Australia
Phone: +61-2-9888-9999
Fax: +61-2-9888-9588

KYOCERA Document Solutions
New Zealand Ltd.
Ground Floor, 19 Byron Avenue, Takapuna, Auckland,
New Zealand
Phone: +64-9-415-4517
Fax: +64-9-415-4597

KYOCERA Document Solutions Asia Limited
Unit 3 & 5, 16/F.,Mita Centre, 552-566, Castle Peak Road
Tsuen Wan, New Territories, Hong Kong
Phone: +852-2496-5678
Fax: +852-2610-2063

KYOCERA Document Solutions
(China) Corporation
8F, No. 288 Nanjing Road West, Huangpu District,
Shanghai,200003, China
Phone: +86-21-5301-1777
Fax: +86-21-5302-8300

KYOCERA Document Solutions
(Thailand) Corp., Ltd.
335 Ratchadapisek Road, Wongsawang, Bangsue,
Bangkok 10800,
Thailand
Phone: +66-2-586-0333
Fax: +66-2-586-0278

KYOCERA Document Solutions
Singapore Pte. Ltd.
12 Tai Seng Street #04-01A,
Luxasia Building, Singapore 534118
Phone: +65-6741-8733
Fax: +65-6748-3788

KYOCERA Document Solutions
Hong Kong Limited
Unit 1,2,4,6,8 & 10, 16/F.,Mita Centre, 552-566, Castle
Peak Road Tsuen Wan, New Territories, Hong Kong
Phone: +852-3582-4000
Fax: +852-3185-1399

KYOCERA Document Solutions
Taiwan Corporation
6F., No.37, Sec. 3, Minquan E. Rd.,
Zhongshan Dist., Taipei 104, Taiwan R.O.C.
Phone: +886-2-2507-6709
Fax: +886-2-2507-8432

KYOCERA Document Solutions Korea Co., Ltd.
#3F Daewoo Foundation Bldg 18, Toegye-ro, Jung-gu,
Seoul, Korea
Phone: +822-6933-4050
Fax: +822-747-0084

KYOCERA Document Solutions
India Private Limited
Second Floor, Centrum Plaza, Golf Course Road,
Sector-53, Gurgaon, Haryana 122002, India
Phone: +91-0124-4671000
Fax: +91-0124-4671001

KYOCERA Document Solutions Europe B.V.
Bloemlaan 4, 2132 NP Hoofddorp,
The Netherlands
Phone: +31-20-654-0000
Fax: +31-20-653-1256

KYOCERA Document Solutions Nederland B.V.
Beechavenue 25, 1119 RA Schiphol-Rijk,
The Netherlands
Phone: +31-20-5877200
Fax: +31-20-5877260

KYOCERA Document Solutions (U.K.) Limited
Eldon Court, 75-77 London Road,
Reading, Berkshire RG1 5BS,
United Kingdom
Phone: +44-118-931-1500
Fax: +44-118-931-1108

KYOCERA Document Solutions Italia S.p.A.
Via Monfalcone 15, 20132, Milano, Italy,
Phone: +39-02-921791
Fax: +39-02-92179-600

KYOCERA Document Solutions Belgium N.V.
Sint-Martinusweg 199-201 1930 Zaventem,
Belgium
Phone: +32-2-7209270
Fax: +32-2-7208748

KYOCERA Document Solutions France S.A.S.
Espace Technologique de St Aubin
Route de l'Orme 91195 Gif-sur-Yvette CEDEX,
France
Phone: +33-1-69852600
Fax: +33-1-69853409

KYOCERA Document Solutions Espana, S.A.
Edificio Kyocera, Avda. de Manacor No.2,
28290 Las Matas (Madrid), Spain
Phone: +34-91-6318392
Fax: +34-91-6318219

KYOCERA Document Solutions Finland Oy
Atomitie 5C, 00370 Helsinki,
Finland
Phone: +358-9-47805200
Fax: +358-9-47805390

KYOCERA Document Solutions Europe B.V., Amsterdam (NL) Zürich Branch
Hohlstrasse 614, 8048 Zürich,
Switzerland
Phone: +41-44-9084949
Fax: +41-44-9084950

KYOCERA Bilgitas Document Solutions Turkey A.S.
Gülbahar Mahallesi Otello Kamil Sk. No:6 Mecidiyeköy
34394 Şişli İstanbul, Turkey
Phone: +90-212-356-7000
Fax: +90-212-356-6725

KYOCERA Document Solutions Deutschland GmbH
Otto-Hahn-Strasse 12, 40670 Meerbusch,
Germany
Phone: +49-2159-9180
Fax: +49-2159-918100

KYOCERA Document Solutions Austria GmbH
Altmannsdorferstraße 91, Stiege 1, 2. OG, Top 1, 1120,
Wien, Austria
Phone: +43-1-863380
Fax: +43-1-86338-400

KYOCERA Document Solutions Nordic AB
Esbogatan 16B 164 75 Kista, Sweden
Phone: +46-8-546-550-00
Fax: +46-8-546-550-10

KYOCERA Document Solutions Norge Nuf
Olaf Helsetsv. 6, 0619 Oslo, Norway
Phone: +47-22-62-73-00
Fax: +47-22-62-72-00

KYOCERA Document Solutions Danmark A/S
Ejby Industrivej 60, DK-2600 Glostrup,
Denmark
Phone: +45-70223880
Fax: +45-45765850

KYOCERA Document Solutions Portugal Lda.
Rua do Centro Cultural, 41 (Alvalade) 1700-106 Lisboa,
Portugal
Phone: +351-21-843-6780
Fax: +351-21-849-3312

KYOCERA Document Solutions South Africa (Pty) Ltd.
KYOCERA House, Hertford Office Park,
90 Bekker Road (Cnr. Allandale), Midrand, South Africa
Phone: +27-11-540-2600
Fax: +27-11-466-3050

KYOCERA Document Solutions Russia LLC.
Building 2, 51/4, Schepkina St., 129110, Moscow,
Russia
Phone: +7(495)741-0004
Fax: +7(495)741-0018

KYOCERA Document Solutions Middle East
Dubai Internet City, Bldg. 17,
Office 157 P.O. Box 500817, Dubai,
United Arab Emirates
Phone: +971-04-433-0412

KYOCERA Document Solutions Inc.
2-28, 1-chome, Tamatsukuri, Chuo-ku
Osaka 540-8585, Japan
Phone: +81-6-6764-3555
http://www.kyoceradocumentsolutions.com

© 2016 KYOCERA Document Solutions Inc.

KYOCERA is a trademark of KYOCERA Corporation