More Service Manuals at www.service-manual.net

RICOH UNIVERSITY
Learning ◆ Knowledge ◆ Performance

D088/D089
SERVICE MANUAL

006189MIU

MAINFRAME

LANIER RICOH savin

WWW.SERVICE-MANUAL.NET

WWW.SERVICE-MANUAL.NET

RICOH UNIVERSITY
Learning • Knowledge • Performance

D088/D089
SERVICE MANUAL
(MAINFRAME)

LANIER
RICOH
savin

WWW.SERVICE-MANUAL.NET

WWW.SERVICE-MANUAL.NET

RICOH UNIVERSITY
Learning ◆ Knowledge ◆ Performance

D088/D089
SERVICE MANUAL
(MAINFRAME)

006189MIU

LANIER RICOH savin

WWW.SERVICE-MANUAL.NET

WWW.SERVICE-MANUAL.NET

It is the reader's responsibility when discussing the information contained within this document to maintain a level of confidentiality that is in the best interest of Ricoh Americas Corporation and its member companies.

NO PART OF THIS DOCUMENT MAY BE REPRODUCED IN ANY FASHION AND DISTRIBUTED WITHOUT THE PRIOR PERMISSION OF RICOH AMERICAS CORPORATION.

All product names, domain names or product illustrations, including desktop images, used in this document are trademarks, registered trademarks or the property of their respective companies.
They are used throughout this book in an informational or editorial fashion only and for the benefit of such companies. No such use, or the use of any trade name, or web site is intended to convey endorsement or other affiliation with Ricoh products.

© 2010 RICOH Americas Corporation. All rights reserved.

WWW.SERVICE-MANUAL.NET

WWW.SERVICE-MANUAL.NET

WARNING

The Service Manual contains information regarding service techniques, procedures, processes and spare parts of office equipment distributed by Ricoh Americas Corporation. Users of this manual should be either service trained or certified by successfully completing a Ricoh Technical Training Program.

Untrained and uncertified users utilizing information contained in this service manual to repair or modify Ricoh equipment risk personal injury, damage to property or loss of warranty protection.

Ricoh Americas Corporation

WWW.SERVICE-MANUAL.NET

WWW.SERVICE-MANUAL.NET

LEGEND

PRODUCT CODE	COMPANY			
	GESTETNER	LANIER	RICOH	SAVIN
D088	MP C4501	LD645C	Aficio MP C4501	C9145
D089	MP C5501	LD655C	Aficio MP C5501	C9155

DOCUMENTATION HISTORY

REV. NO.	DATE	COMMENTS
*	11/2010	Original Printing

WWW.SERVICE-MANUAL.NET

WWW.SERVICE-MANUAL.NET

D088/D089

TABLE OF CONTENTS

PRODUCT INFORMATION

1. PRODUCT INFORMATION 1-1

1.1 SPECIFICATIONS 1-1

1.2 PRODUCT OVERVIEW 1-2

1.2.1 COMPONENT LAYOUT 1-2

1.2.2 PAPER PATH 1-3

1.2.3 DRIVE LAYOUT 1-4

1.3 MACHINE CODES AND PERIPHERALS CONFIGURATION 1-6

1.4 GUIDANCE FOR THOSE WHO ARE FAMILIAR WITH PREDECESSOR PRODUCTS 1-10

INSTALLATION

2. INSTALLATION 2-1

2.1 INSTALLATION REQUIREMENTS 2-1

2.1.1 ENVIRONMENT 2-1

2.1.2 MACHINE LEVEL 2-2

2.1.3 MACHINE SPACE REQUIREMENTS 2-2

2.1.4 MACHINE DIMENSIONS 2-3

2.1.5 POWER REQUIREMENTS 2-3

2.2 OPTIONAL UNIT COMBINATIONS 2-4

2.2.1 MACHINE OPTIONS 2-4

2.2.2 CONTROLLER OPTIONS 2-5

2.2.3 OTHER OPTIONS 2-6

2.2.4 FAX OPTIONS 2-6

2.3 COPIER INSTALLATION 2-7

2.3.1 POWER SOCKETS FOR PERIPHERALS 2-7

2.3.2 INSTALLATION FLOW CHART 2-7

2.3.3 INSTALLATION PROCEDURE 2-8

Tapes and Retainers 2-9

Developer and Toner Bottles 2-9

Paper Trays 2-10

Emblem and Decals 2-11

WWW.SERVICE-MANUAL.NET

Initialize the Developer.....2-11
Settings Relevant to the Service Contract.....2-12
SP Operation Sound On/Off Setting.....2-13
Settings for @Remote Service.....2-13
VM Card Installation.....2-17
Enabling App2Me.....2-17
2.3.4 MOVING THE MACHINE.....2-18
2.3.5 TRANSPORTING THE MACHINE.....2-18
2.4 PAPER FEED UNIT PB3010 (D537).....2-20
2.4.1 ACCESSORY CHECK.....2-20
2.4.2 INSTALLATION PROCEDURE.....2-20
2.5 ENVELOPE FEEDER EF3000 (D547).....2-23
2.5.1 ACCESSORY CHECK.....2-23
2.5.2 INSTALLATION PROCEDURE.....2-23
2.6 LCIT PB3110 (D538).....2-25
2.6.1 ACCESSORY CHECK.....2-25
2.6.2 INSTALLATION PROCEDURE.....2-25
2.7 LCIT RT3010 (D539).....2-28
2.7.1 COMPONENT CHECK.....2-28
2.7.2 INSTALLATION PROCEDURE.....2-28
2.7.3 SIDE FENCE POSITION CHANGE.....2-30
2.8 ARDF DF3040 (D540).....2-32
2.8.1 COMPONENT CHECK.....2-32
2.8.2 INSTALLATION PROCEDURE.....2-32
2.9 1 BIN TRAY BN3080 (D536).....2-36
2.9.1 COMPONENT CHECK.....2-36
2.9.2 INSTALLATION PROCEDURE.....2-36
2.10 INTERNAL SHIFT TRAY SH3040 (D388).....2-39
2.10.1 COMPONENT CHECK.....2-39
2.10.2 INSTALLATION PROCEDURE.....2-39
2.11 SIDE TRAY TYPE C5501 (D542).....2-41
2.11.1 COMPONENT CHECK.....2-41
2.11.2 INSTALLATION PROCEDURE.....2-41
2.12 BRIDGE UNIT BU3030 (D386).....2-44
2.12.1 COMPONENT CHECK.....2-44
2.12.2 INSTALLATION PROCEDURE.....2-44
2.13 SR790 (B408).....2-47
2.13.1 ACCESSORY CHECK.....2-47

WWW.SERVICE-MANUAL.NET

2.13.2 INSTALLATION PROCEDURE 2-47
2.14 FINISHER SR3020/SR3030 (B804/B805) 2-50
2.14.1 ACCESSORY CHECK.....2-50
2.14.2 INSTALLATION PROCEDURE 2-51
Support Tray Installation 2-54
2.15 PUNCH UNIT TYPE 3260 (B702).....2-55
2.15.1 COMPONENT CHECK.....2-55
2.15.2 INSTALLATION PROCEDURE 2-55
2.16 KEY COUNTER BRACKET TYPE H (A674).....2-60
2.16.1 INSTALLATION PROCEDURE 2-60
2.17 OPTIONAL COUNTER INTERFACE UNIT TYPE A (B870) 2-62
2.17.1 INSTALLATION PROCEDURE 2-62
2.18 USB2.0/SD SLOT TYPE F (D546).....2-64
2.18.1 ACCESSORY CHECK.....2-64
2.18.2 INSTALLATION PROCEDURE 2-64
2.18.3 TESTING THE SD CARD/USB SLOT 2-67
2.19 CARD READER BRACKET TYPE C5501 (D547) 2-68
2.19.1 COMPONENT CHECK.....2-68
2.19.2 INSTALLATION PROCEDURE 2-69
2.20 ANTI-CONDENSATION HEATER (SCANNER) 2-70
2.20.1 INSTALLATION PROCEDURE 2-70
2.21 ANTI-CONDENSATION HEATER TYPE A.....2-72
2.21.1 COMPONENT CHECK.....2-72
2.21.2 INSTALLATION PROCEDURE 2-72
For installing the tray heater in the main machine.....2-73
For installing the tray heater in D537 2-73
For Installing the Tray Heater in D538 2-75
2.22 CONTROLLER OPTIONS 2-78
2.22.1 OVERVIEW 2-78
I/F Card Slots 2-78
SD Card Slots 2-78
2.22.2 SD CARD APPLI MOVE.....2-78
Overview 2-78
Move Exec 2-79
Undo Exec 2-80
2.22.3 POSTSCRIPT3 UNIT TYPE C5501 2-80
2.22.4 IPDS UNIT TYPE C5501.....2-82
2.22.5 FILE FORMAT CONVERTER TYPE E.....2-82

WWW.SERVICE-MANUAL.NET

2.22.6 IEEE 1284 INTERFACE BOARD TYPE A.....2-83
Installation Procedure 2-83
2.22.7 IEEE 802.11A/G INTERFACE UNIT TYPE J.....2-84
Installation Procedure 2-84
UP Mode Settings for Wireless LAN 2-86
SP Mode and UP Mode Settings for IEEE 802.11 a/g Wireless LAN..2-87
2.22.8 BLUETOOTH INTERFACE UNIT TYPE 3245.....2-88
2.22.9 CAMERA DIRECT PRINT CARD TYPE I.....2-88
2.22.10 BROWSER UNIT TYPE E.....2-89
Installation Procedure 2-89
2.22.11 GIGABIT ETHERNET TYPE B.....2-91
2.22.12 CHECK ALL CONNECTIONS 2-92
2.23 SCANNER ACCESSIBILITY OPTION TYPE C5000 D423.....2-100

PREVENTIVE MAINTENANCE

3. PREVENTIVE MAINTENANCE..... 3-1
3.1 MAINTENANCE TABLES.....3-1
3.2 PM PARTS SETTINGS.....3-2
3.2.1 BEFORE REMOVING THE OLD PM PARTS.....3-2
3.2.2 AFTER INSTALLING THE NEW PM PARTS 3-3
3.2.3 PREPARATION BEFORE OPERATION CHECK.....3-3
3.2.4 OPERATION CHECK.....3-4

REPLACEMENT AND ADJUSTMENT

4. REPLACEMENT AND ADJUSTMENT..... 4-1
4.1 BEFOREHAND.....4-1
4.2 SPECIAL TOOLS 4-2
4.3 IMAGE ADJUSTMENT 4-3
4.3.1 SCANNING.....4-3
Scanner sub-scan magnification 4-3
Scanner leading edge and side-to-side registration 4-3
4.3.2 ARDF.....4-4
ARDF side-to-side, leading edge registration and trailing edge 4-4
ARDF sub-scan magnification.....4-5
4.3.3 REGISTRATION.....4-5
Image Area 4-5
Leading Edge.....4-5
Side to Side.....4-5

WWW.SERVICE-MANUAL.NET

Adjustment Standard....4-6
Paper Registration Standard....4-6
Adjustment Procedure....4-6
4.3.4 ERASE MARGIN ADJUSTMENT....4-6
4.3.5 COLOR REGISTRATION....4-7
Line Position Adjustment....4-7
4.3.6 PRINTER GAMMA CORRECTION....4-8
Copy Mode....4-8
Printer Mode....4-12
4.4 EXTERIOR COVERS....4-14
4.4.1 FRONT DOOR....4-14
4.4.2 CONTROLLER COVER....4-14
4.4.3 LEFT COVER....4-15
4.4.4 REAR COVER....4-15
4.4.5 RIGHT REAR COVER....4-16
4.4.6 OPERATION PANEL....4-16
4.4.7 PAPER EXIT COVER....4-17
4.4.8 INNER TRAY....4-17
4.4.9 OZONE FILTER AND DUST FILTER....4-18
Ozone filters for the scanner unit....4-18
Ozone filter and dust filter for the IH inverter....4-19
4.5 SCANNER UNIT....4-20
4.5.1 EXPOSURE GLASS....4-20
4.5.2 EXPOSURE LAMP....4-20
4.5.3 SCANNER MOTOR....4-22
4.5.4 SENSOR BOARD UNIT (SBU)....4-23
When reassembling....4-24
4.5.5 ORIGINAL LENGTH SENSORS....4-25
4.5.6 EXPOSURE LAMP STABILIZER....4-25
4.5.7 SIO (SCANNER IN/OUT) BOARD....4-26
4.5.8 SCANNER HP SENSOR....4-26
4.5.9 PLATEN COVER SENSOR....4-27
4.5.10 FRONT SCANNER WIRE....4-27
Reassembling the Front Scanner Wire....4-28
4.5.11 REAR SCANNER WIRE....4-30
Reassembling the Rear Scanner Wire....4-32
4.5.12 TOUCH PANEL POSITION ADJUSTMENT....4-33
4.6 LASER OPTICS....4-34

WWW.SERVICE-MANUAL.NET

4.6.1 CAUTION DECAL LOCATION 4-34
4.6.2 LASER OPTICS HOUSING UNIT.....4-34
Preparing the new laser optics housing unit.....4-35
Before removing the old laser optics housing unit.....4-35
Recovery procedure for no replacement preparation of laser optics housing unit.....4-35
Removing the old laser optics housing unit.....4-36
Installing a new Laser Optics Housing Unit.....4-37
After installing the new laser optics housing unit.....4-38
4.6.3 POLYGON MIRROR MOTOR AND DRIVE BOARD 4-39
4.6.4 AIRFLOW FANS.....4-40
4.7 IMAGE CREATION.....4-42
4.7.1 PCDU 4-42
4.7.2 DRUM UNIT AND DEVELOPMENT UNIT.....4-42
Developer.....4-45
4.7.3 TONER COLLECTION BOTTLE 4-47
4.7.4 SECOND DUCT FAN 4-47
When reinstalling the second duct fan 4-48
4.7.5 THIRD DUCT FAN.....4-48
When reinstalling the third duct fan.....4-49
4.7.6 TONER PUMP UNIT 4-49
When you install the new toner pump unit 4-52
4.7.7 TONER END SENSOR 4-54
4.8 IMAGE TRANSFER.....4-55
4.8.1 IMAGE TRANSFER BELT UNIT.....4-55
4.8.2 IMAGE TRANSFER BELT CLEANING UNIT 4-55
4.8.3 IMAGE TRANSFER BELT.....4-56
When reinstalling the image transfer belt.....4-59
4.9 PAPER TRANSFER 4-61
4.9.1 PAPER TRANSFER ROLLER UNIT.....4-61
4.9.2 PAPER TRANSFER UNIT.....4-61
4.9.3 ID SENSOR BOARD 4-63
Cleaning for ID sensors.....4-64
After installing a new ID sensor unit/board.....4-64
4.9.4 TEMPERATURE AND HUMIDITY SENSOR.....4-65
4.10 DRIVE UNIT.....4-66
4.10.1 GEAR UNIT 4-66
When installing the drive unit 4-71

WWW.SERVICE-MANUAL.NET

Adjustment after replacing the gear unit.....4-71
4.10.2 REGISTRATION MOTOR 4-72
4.10.3 PAPER FEED MOTOR.....4-72
4.10.4 DRUM/DEVELOPMENT MOTORS FOR M, C, AND Y 4-73
4.10.5 DRUM/DEVELOPMENT MOTOR-K.....4-74
4.10.6 ITB DRIVE MOTOR.....4-74
4.10.7 FUSING/PAPER EXIT MOTOR.....4-75
4.10.8 IMAGE TRANSFER BELT CONTACT MOTOR 4-75
4.10.9 DUPLEX INVERTER MOTOR.....4-76
4.10.10 PRESSURE ROLLER CONTACT MOTOR 4-77
4.10.11 DUPLEX/BY-PASS MOTOR 4-78
4.10.12 PAPER TRANSFER CONTACT MOTOR.....4-79
4.10.13 TONER TRANSPORT MOTOR.....4-81
4.10.14 TONER COLLECTION UNIT.....4-81
4.10.15 PAPER FEED CLUTCHES.....4-82
4.10.16 DEVELOPMENT CLUTCH-Y 4-84
4.10.17 DEVELOPMENT CLUTCHES FOR M AND C.....4-85
4.10.18 DEVELOPMENT CLUTCH-K 4-85
4.11 FUSING 4-87
4.11.1 FUSING UNIT PM PARTS 4-87
4.11.2 FUSING UNIT.....4-87
4.11.3 FUSING ENTRANCE GUIDE PLATE.....4-88
Cleaning Requirement 4-89
4.11.4 FUSING EXIT GUIDE PLATE CLEANING PROCEDURE 4-89
4.11.5 HEATING ROLLER AND HEATING ROLLER BEARING.....4-89
When re-installing the heating roller.....4-94
4.11.6 FUSING CLEANING FELT 4-95
When attaching a new fusing cleaning felt 4-96
4.11.7 FUSING LAMP 4-96
4.11.8 PRESSURE ROLLER AND PRESSURE ROLLER BEARING....4-97
When re-installing the pressure roller.....4-99
4.11.9 STRIPPER PLATES.....4-100
Cleaning Requirement 4-101
4.11.10 HEATING ROLLER THERMISTOR.....4-101
4.11.11 PRESSURE ROLLER THERMOSTAT 4-102
4.11.12 PRESSURE ROLLER THERMISTORS.....4-102
Pressure Roller Thermistor: Center.....4-102
Pressure Roller Thermistor: End 4-103

WWW.SERVICE-MANUAL.NET

4.11.13 FUSING FAN 4-104
When installing the fusing fan 4-104
4.11.14 PAPER EXIT FAN 4-104
When installing the paper exit fan 4-105
4.11.15 IH (INDUCTION HEATING) INVERTER FAN.....4-105
When installing the IH inverter fan 4-105
4.11.16 THERMOPILE 4-105
When cleaning the lens of the thermopile 4-107
4.11.17 PRESSURE ROLLER HP SENSOR 4-108
4.11.18 IH COIL FAN 4-108
4.11.19 IH COIL UNIT 4-109
4.12 PAPER FEED 4-112
4.12.1 PAPER FEED UNIT 4-112
4.12.2 SEPARATION ROLLER, FEED ROLLER AND PICK-UP BELT UNIT 4-113
Tray 1 and Tray 2.....4-113
4.12.3 TRAY LIFT MOTOR 4-113
4.12.4 VERTICAL TRANSPORT, PAPER OVERFLOW, PAPER END AND PAPER FEED SENSOR 4-114
4.12.5 REGISTRATION SENSOR.....4-114
4.12.6 BY-PASS PAPER SIZE SENSOR AND BY-PASS PAPER LENGTH SENSOR 4-115
When reinstalling the by-pass paper size sensor.....4-116
4.12.7 BY-PASS BOTTOM TRAY 4-117
4.12.8 BY-PASS PAPER END SENSOR 4-119
4.12.9 BY-PASS PICK-UP, FEED AND SEPARATION ROLLER, TORQUE LIMITER 4-120
4.12.10 BY-PASS FEED CLUTCH.....4-121
4.12.11 PAPER EXIT UNIT 4-121
4.12.12 FUSING EXIT, PAPER OVERFLOW, JUNCTION PAPER JAM AND PAPER EXIT SENSOR.....4-122
4.13 DUPLEX UNIT 4-124
4.13.1 DUPLEX UNIT.....4-124
4.13.2 DUPLEX DOOR SENSOR 4-125
4.13.3 DUPLEX ENTRANCE SENSOR 4-126
4.13.4 DUPLEX EXIT SENSOR 4-126
4.14 ELECTRICAL COMPONENTS 4-128
4.14.1 BOARDS 4-128

WWW.SERVICE-MANUAL.NET

4.14.2 CONTROLLER UNIT 4-130
4.14.3 CONTROLLER BOX RIGHT COVER 4-130
4.14.4 CONTROLLER BOX 4-131
When opening the controller box 4-131
When removing the controller box 4-132
4.14.5 IOB (IN/OUT BOARD) 4-133
4.14.6 BICU 4-134
When installing the new BICU 4-134
4.14.7 PSU 4-135
PSU bracket 4-135
PSU board 4-135
4.14.8 POWER RELAY SWITCH 4-136
4.14.9 ITB POWER SUPPLY BOARD 4-137
4.14.10 HIGH VOLTAGE SUPPLY BOARD 4-137
4.14.11 HIGH VOLTAGE SUPPLY BOARD BRACKET 4-137
4.14.12 IH INVERTER 4-138
4.14.13 CONTROLLER BOARD 4-138
When installing the new controller board 4-139
4.14.14 HDD FAN 4-140
When installing the HDD fan 4-140
4.14.15 HDD 4-140
When installing a new HDD unit 4-141
4.14.16 NVRAM REPLACEMENT PROCEDURE 4-141
NVRAM on the BICU 4-141
4.15 USING DIP SWITCHES 4-143
4.15.1 CONTROLLER BOARD 4-143
4.15.2 BICU BOARD 4-143

SYSTEM MAINTENANCE

5. SYSTEM MAINTENANCE 5-1
5.1 SERVICE PROGRAM MODE 5-1
5.1.1 SP TABLES 5-1
5.1.2 ENABLING AND DISABLING SERVICE PROGRAM MODE 5-1
Entering SP Mode 5-1
Exiting SP Mode 5-1
5.1.3 TYPES OF SP MODES 5-1
SP Mode Button Summary 5-2
Switching Between SP Mode and Copy Mode for Test Printing 5-3

WWW.SERVICE-MANUAL.NET

Selecting the Program Number 5-3
Exiting Service Mode 5-4
Service Mode Lock/Unlock.....5-4
5.1.4 REMARKS 5-4
Display on the Control Panel Screen 5-4
Others 5-5
5.2 MAIN SP TABLES-1 5-7
5.2.1 SP1-XXX (FEED).....5-7
5.3 MAIN SP TABLES-2 5-36
5.3.1 SP2-XXX (DRUM) 5-36
5.4 MAIN SP TABLES-3 5-108
5.4.1 SP3-XXX (PROCESS).....5-108
5.5 MAIN SP TABLES-4 5-139
5.5.1 SP4-XXX (SCANNER).....5-139
5.6 MAIN SP TABLES-5 5-158
5.6.1 SP5-XXX (MODE) 5-158
5.7 MAIN SP TABLES-6 5-220
5.7.1 SP6-XXX (PERIPHERALS) 5-220
5.8 MAIN SP TABLES-7 5-228
5.8.1 SP7-XXX (DATA LOG) 5-228
5.9 MAIN SP TABLES-8 5-260
5.9.1 SP8-XXX: DATA LOG2 5-260
5.10 MAIN SP TABLES-9 5-308
5.10.1 INPUT CHECK TABLE 5-308
Copier 5-308
Table 1: Paper Height Sensor.....5-312
Table 2: Paper Size Switch (Tray 2).....5-312
Table 3: Paper Size (By-pass Table) 5-313
ARDF (D540) 5-314
2000/3000-Sheet (Booklet) Finisher (B804, B805) 5-315
1000-Sheet Finisher (B408) 5-318
Bridge Unit (D386)/ Side Tray (D542) 5-319
Internal Shift Tray (D388).....5-320
1 Bin Tray (D536).....5-320
Two-Tray PFU (D537)/ LCIT 2000 (D538)/ LCIT 1200 (D539).....5-320
5.10.2 OUTPUT CHECK TABLE 5-321
Copier 5-321
ARDF (D540) 5-328

WWW.SERVICE-MANUAL.NET

1000-Sheet Finisher (B408) 5-328
2000/3000-Sheet (Booklet) Finisher (B804/B805) 5-329
Bridge Unit (D386)/ Side Tray (D542) 5-330
Shift Tray (D388).....5-331
1 Bin Tray (D536).....5-331
Two-Tray PFU (D537)/ LCIT 2000 (D538)/ LCIT 1200 (D539).....5-331
5.10.3 PRINTER SERVICE MODE 5-332
SP1-XXX (Service Mode).....5-332
5.10.4 SCANNER SP MODE.....5-341
SP1-xxx (System and Others).....5-341
SP2-XXX (Scanning-image quality) 5-341
5.11 FIRMWARE UPDATE 5-343
5.11.1 TYPE OF FIRMWARE.....5-343
5.11.2 BEFORE YOU BEGIN 5-344
5.11.3 UPDATING FIRMWARE.....5-344
Preparation 5-344
Updating Procedure 5-345
Error Messages.....5-346
Firmware Update Error.....5-346
Recovery after Power Loss 5-346
5.11.4 UPDATING THE LCDC FOR THE OPERATION PANEL.....5-346
5.11.5 UPDATE PROCEDURE FOR APP2ME PROVIDER 5-347
5.11.6 BROWSER UNIT UPDATE PROCEDURE 5-348
5.11.7 HANDLING FIRMWARE UPDATE ERRORS.....5-349
Error Message Table.....5-349
5.12 INSTALLING ANOTHER LANGUAGE.....5-352
5.13 REBOOT/SYSTEM SETTING RESET.....5-355
5.13.1 SOFTWARE RESET 5-355
5.13.2 SYSTEM SETTINGS AND COPY SETTING RESET.....5-355
System Setting Reset.....5-355
Copier Setting Reset 5-355
5.14 DOWNLOADING STAMP DATA.....5-357
5.15 NVRAM DATA UPLOAD/DOWNLOAD.....5-358
5.15.1 UPLOADING CONTENT OF NVRAM TO AN SD CARD 5-358
5.15.2 DOWNLOADING AN SD CARD TO NVRAM 5-358
5.16 ADDRESS BOOK UPLOAD/DOWNLOAD.....5-360
5.16.1 INFORMATION LIST 5-360
5.16.2 DOWNLOAD 5-360

WWW.SERVICE-MANUAL.NET

5.16.3 UPLOAD 5-361
5.17 USING THE DEBUG LOG 5-362
5.17.1 OVERVIEW 5-362
5.17.2 SWITCHING ON AND SETTING UP SAVE DEBUG LOG 5-362
5.17.3 RETRIEVING THE DEBUG LOG FROM THE HDD 5-366
5.17.4 RECORDING ERRORS MANUALLY 5-366
5.17.5 DEBUG LOG CODES 5-366
SP5857-015 Copy SD Card-to-SD Card: Any Desired Key 5-366
SP5857-016 Create a File on HDD to Store a Log 5-367
SP5857-017 Create a File on SD Card to Store a Log 5-367
5.18 CARD SAVE FUNCTION 5-368
5.18.1 OVERVIEW 5-368
Card Save: 5-368
5.18.2 PROCEDURE 5-368
5.18.3 ERROR MESSAGES 5-371

TROUBLESHOOTING

6. TROUBLESHOOTING 6-1
6.1 SERVICE CALL 6-1
6.1.1 SERVICE CALL CONDITIONS 6-1
SC Code Classification 6-2
6.1.2 SERVICE CALL TABLES - 1 6-4
SC1xxx: Scanning 6-4
6.1.3 SERVICE CALL TABLES - 2 6-9
SC Codes Group 2: Exposure 6-9
6.1.4 SERVICE CALL TABLES - 3 6-15
SC3xx: Image Processing – 1 6-15
SC3xx: Image Processing – 2 6-16
6.1.5 SERVICE CALL TABLES - 4 6-19
SC4xx: Image Processing - 3 6-19
6.1.6 SERVICE CALL TABLES – 5 6-23
SC5xx: Paper Feed and Fusing 6-23
6.1.7 SERVICE CALL TABLES - 6 6-38
SC6xx: Device Communication 6-38
6.1.8 SERVICE CALL TABLES - 7 6-47
SC7xx: Peripherals 6-47
6.1.9 SERVICE CALL TABLES - 8 6-60
SC8xx: Overall System 6-60

WWW.SERVICE-MANUAL.NET

6.1.10 SERVICE CALL TABLES - 9 6-71
SC9xx: Miscellaneous 6-71
6.2 PROCESS CONTROL ERROR CONDITIONS 6-77
6.2.1 DEVELOPER INITIALIZATION RESULT 6-77
6.2.2 PROCESS CONTROL SELF-CHECK RESULT 6-78
Vsg Adjustment Result 6-80
6.2.3 LINE POSITION ADJUSTMENT RESULT 6-80
6.3 TROUBLESHOOTING GUIDE 6-82
6.3.1 IMAGE QUALITY 6-82
6.3.2 LINE POSITION ADJUSTMENT 6-83
Test 6-84
Countermeasure list for color registration errors 6-84
6.3.3 STAIN ON THE OUTPUTS 6-89
6.3.4 STACK PROBLEM IN THE 1-BIN TRAY 6-90
6.3.5 PROBLEM AT REGULAR INTERVALS 6-90
6.3.6 TONER END RECOVERY ERROR 6-91
Flow Chart for the Toner End Recovery Error 6-92
6.3.7 SOLID IMAGE OR HALFTONE IMAGE ERROR 6-93
Recovery Procedure 6-94
Problem Prevention Procedure 6-94
6.3.8 FAULTY CLEANING 6-95
Black or color lines (2-3mm) 6-95
Band Image Between 20mm and 30mm 6-95
6.4 JAM DETECTION 6-97
6.4.1 PAPER JAM DISPLAY 6-97
6.4.2 JAM CODES AND DISPLAY CODES 6-97
Paper Size Code 6-104
Sensor Locations 6-105
6.5 ELECTRICAL COMPONENT DEFECTS 6-106
6.5.1 SENSORS 6-106
6.5.2 BLOWN FUSE CONDITIONS 6-111
Power Supply Unit 6-111
IH Inverter 6-112
6.6 SCANNER TEST MODE 6-114
6.6.1 SBU TEST MODE 6-114

WWW.SERVICE-MANUAL.NET

ENERGY SAVING

7. ENERGY SAVING 7-1
7.1 ENERGY SAVE 7-1
7.1.1 ENERGY SAVER MODES 7-1
Timer Settings 7-1
Return to Stand-by Mode 7-2
Recommendation 7-2
7.1.2 ENERGY SAVE EFFECTIVENESS.....7-2
7.2 PAPER SAVE 7-4
7.2.1 EFFECTIVENESS OF DUPLEX/COMBINE FUNCTION 7-4
1. Duplex: 7-4
2. Combine mode: 7-4
3. Duplex + Combine: 7-4
How to calculate the paper reduction ratio 7-5

D088/D089 SERVICE MANUAL APPENDICES

SEE D088/D089 SERVICE MANUAL APPENDICES SECTION FOR DETAILED TABLE OF CONTENTS

1000-SHEET FINISHER (B408)

SEE SECTION B408 FOR DETAILED TABLE OF CONTENTS

BOOKLET FIISHER & FINISHER (B804/B805/D373/D374)

SEE SECTION B804/B805/D373/D374 FOR DETAILED TABLE OF CONTENTS

BRIDGE UNIT BU3030D (D386)

SEE SECTION D386 FOR DETAILED TABLE OF CONTENTS

INTERNAL SHIFT TRAY SH3040 (D388)

SEE SECTION D388 FOR DETAILED TABLE OF CONTENTS

WWW.SERVICE-MANUAL.NET

FAX OPTION TYPE C5000 (D393)

SEE SECTION D393 FOR DETAILED TABLE OF CONTENTS

BIN TRAY BN3080 (D536)

SEE SECTION D536 FOR DETAILED TABLE OF CONTENTS

PAPER FEED UNIT PB3100 (D537)

SEE SECTION D537 FOR DETAILED TABLE OF CONTENTS

LCIT PB3110 (D538)

SEE SECTION D538 FOR DETAILED TABLE OF CONTENTS

LCIT PB3010 (D539)

SEE SECTION D538 FOR DETAILED TABLE OF CONTENTS

ARDF DF3040 (D540)

SEE SECTION D540 FOR DETAILED TABLE OF CONTENTS

SIDE TRAY TYPE C5501 (D542)

SEE SECTION D542 FOR DETAILED TABLE OF CONTENTS

FAX OPTION TYPE C5501 (D545)

SEE SECTION D545 FOR DETAILED TABLE OF CONTENTS

WWW.SERVICE-MANUAL.NET

WWW.SERVICE-MANUAL.NET

PRODUCT INFORMATION
- APPENDIX: SPECIFICATIONS
  - FAX OPTION TYPE C5000 (D393)
  - FAX OPTION TYPE C5501 (D545)
  - ARDF DF3040 (D540)

INSTALLATION
- APPENDIX: PM MAINTENANCE TABLES
  - PAPER FEED UNIT PB3100 (D537)

PREVENTIVE MAINTENANCE
- APPENDIX: SP MODE TABLES
  - LCIT PB3110 (D538)
  - LCIT PB3010 (D539)

REPLACEMENT AND ADJUSTMENT
- 1000-Sheet Finisher (B408)
  - Booklet Finisher/Finisher (B804/B805/D373/D374)

SYSTEM MAINTENANCE

TROUBLESHOOTING

ENERGY SAVING
- BIN TRAY BN3080 (D536)
  - SIDE TRAY TYPE C5501 (D542)

- Bridge Unit BU3030 (D386)
- INTERNAL SHIFT TRAY SH3040 (D388)

TAB POSITION 1

TAB POSITION 2

TAB POSITION 3

TAB POSITION 4

TAB POSITION 5

TAB POSITION 6

TAB POSITION 7

TAB POSITION 8

WWW.SERVICE-MANUAL.NET

WWW.SERVICE-MANUAL.NET

Read This First

Important Safety Notices

Prevention of Physical Injury

1. Before disassembling or assembling parts of the copier and peripherals, make sure that the copier power cord is unplugged.
2. The wall outlet should be near the copier and easily accessible.
3. If any adjustment or operation check has to be made with exterior covers off or open while the main switch is turned on, keep hands away from electrified or mechanically driven components.
4. The copier drives some of its components when it completes the warm-up period. Be careful to keep hands away from the mechanical and electrical components as the copier starts operation.
5. The inside and the metal parts of the fusing unit become extremely hot while the copier is operating. Be careful to avoid touching those components with your bare hands.

Health Safety Conditions

1. Toner and developer are non-toxic, but if you get either of them in your eyes by accident, it may cause temporary eye discomfort. Immediately wash eyes with plenty of water. If unsuccessful, get medical attention.
2. The copier, which use high voltage power source, can generate ozone gas. High ozone density is harmful to human health. Therefore, the machine must be installed in a well-ventilated room.

WWW.SERVICE-MANUAL.NET

Observance of Electrical Safety Standards

The copier and its peripherals must be serviced by a customer service representative who has completed the training course on those models.

⚠WARNING

- ⃠Keep the machine away from flammable liquids, gases, and aerosols. A fire or an explosion might occur.

⚠CAUTION

- The Controller board on this machine contains a lithium battery. The danger of explosion exists if a battery of this type is incorrectly replaced. Replace only with the same or an equivalent type recommended by the manufacturer. Discard batteries in accordance with the manufacturer's instructions and local regulations.
- The optional fax and memory expansion units contain lithium batteries, which can explode if replaced incorrectly. Replace only with the same or an equivalent type recommended by the manufacturer. Do not recharge or burn the batteries. Used batteries must be handled in accordance with local regulations.

Safety and Ecological Notes for Disposal

1. Do not incinerate toner bottles or used toner. Toner dust may ignite suddenly when exposed to an open flame.
2. Dispose of used toner, the maintenance unit which includes developer or the organic photoconductor in accordance with local regulations. (These are non-toxic supplies.)
3. Dispose of replaced parts in accordance with local regulations.
4. When keeping used lithium batteries in order to dispose of them later, do not put more than 100 batteries per sealed box. Storing larger numbers or not sealing them apart may lead to chemical reactions and heat build-up.

WWW.SERVICE-MANUAL.NET

Laser Safety

The Center for Devices and Radiological Health (CDRH) prohibits the repair of laser-based optical units in the field. The optical housing unit can only be repaired in a factory or at a location with the requisite equipment. The laser subsystem is replaceable in the field by a qualified Customer Engineer. The laser chassis is not repairable in the field. Customer engineers are therefore directed to return all chassis and laser subsystems to the factory or service depot when replacement of the optical subsystem is required.

⚠WARNING

- **Use of controls, or adjustment, or performance of procedures other than those specified in this manual may result in hazardous radiation exposure.**

⚠WARNING

- **WARNING**: Turn off the main switch before attempting any of the procedures in the Laser Optics Housing Unit section. Laser beams can seriously damage your eyes.
- **CAUTION MARKING:**

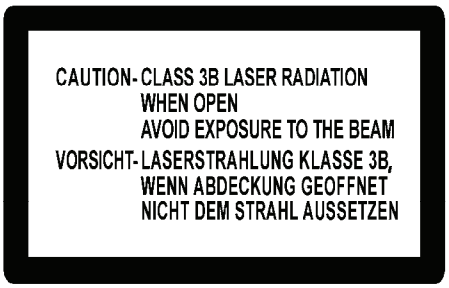

Warnings, Cautions, Notes

In this manual, the following important symbols and notations are used.

⚠WARNING

- A Warning indicates a potentially hazardous situation. Failure to obey a Warning could result in death or serious injury.

⚠CAUTION

- A Caution indicates a potentially hazardous situation. Failure to obey a Caution could result in minor or moderate injury or damage to the machine or other property.

Important

- Obey these guidelines to avoid problems such as misfeeds, damage to originals, loss of valuable data and to prevent damage to the machine.

Note

- This information provides tips and advice about how to best service the machine.

WWW.SERVICE-MANUAL.NET

Symbols, Abbreviations and Trademarks

This manual uses several symbols and abbreviations. The meaning of those symbols and abbreviations are as follows:

	See or Refer to
	Clip ring
	Screw
	Connector
	Clamp
	E-ring
SEF	Short Edge Feed
LEF	Long Edge Feed

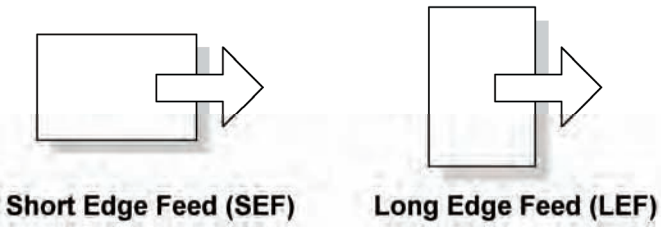

Trademarks

Microsoft®, Windows®, and MS-DOS® are registered trademarks of Microsoft Corporation in the United States and /or other countries.
PostScript® is a registered trademark of Adobe Systems, Incorporated.
PCL® is a registered trademark of Hewlett-Packard Company.
Ethernet® is a registered trademark of Xerox Corporation.
PowerPC® is a registered trademark of International Business Machines Corporation.
Other product names used herein are for identification purposes only and may be trademarks of their respective companies. We disclaim any and all rights involved with those marks.

WWW.SERVICE-MANUAL.NET

PRODUCT INFORMATION

REVISION HISTORY		
Page	**Date**	**Added/Updated/New**
		None

WWW.SERVICE-MANUAL.NET

WWW.SERVICE-MANUAL.NET

1. PRODUCT INFORMATION

1.1 SPECIFICATIONS

See "Appendices" for the following information:

- General Specifications
- Supported Paper Sizes
- Software Accessories
- Optional Equipment

WWW.SERVICE-MANUAL.NET

1.2 PRODUCT OVERVIEW

1.2.1 COMPONENT LAYOUT

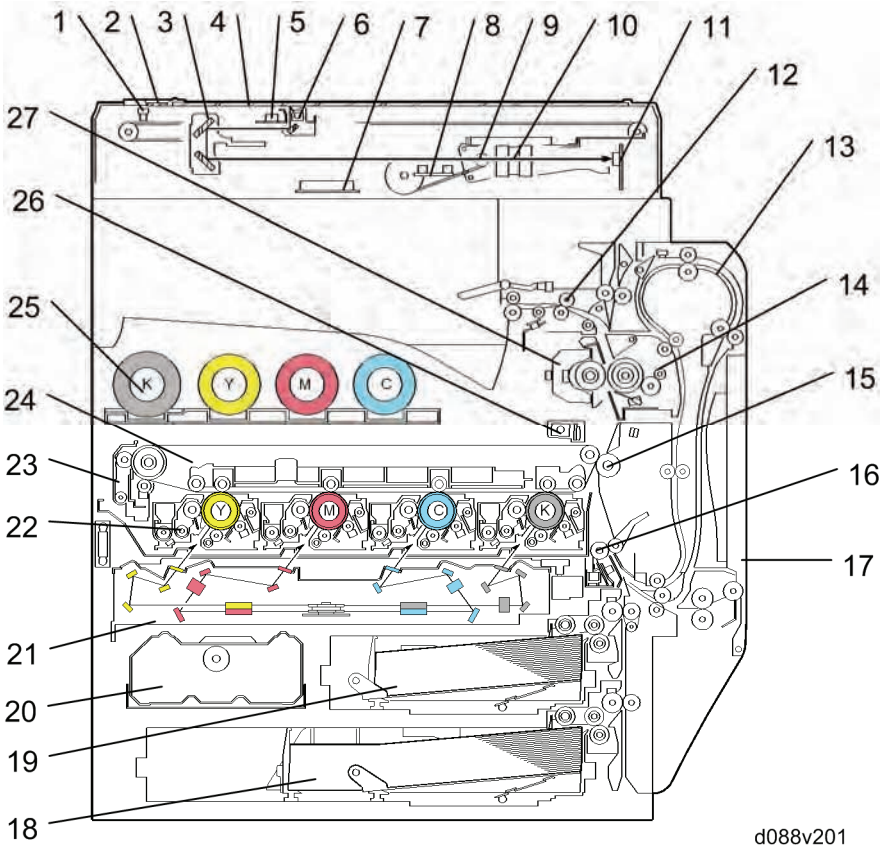

1. Scanner HP sensor 2. ADF exposure glass 3. 2nd scanner (2nd carriage) 4. Exposure glass 5. 1st scanner (1st carriage) 6. Scanner lamp 7. Original width sensor 8. Original length sensor 9. Scanner motor 10. Lens block 11. Sensor board unit (SBU) 12. Decurler rollers 13. Duplex unit 14. Fusing unit	15. Paper transfer roller 16. Registration roller 17. By-pass feed table 18. Tray 2 19. Tray 1 20. Toner collection bottle 21. Laser optics housing unit 22. PCDU (4 colors) 23. Image transfer belt cleaning unit 24. Image transfer belt unit 25. Toner bottle (4 colors) 26. ID sensor 27. IH coil unit

WWW.SERVICE-MANUAL.NET

1.2.2 PAPER PATH

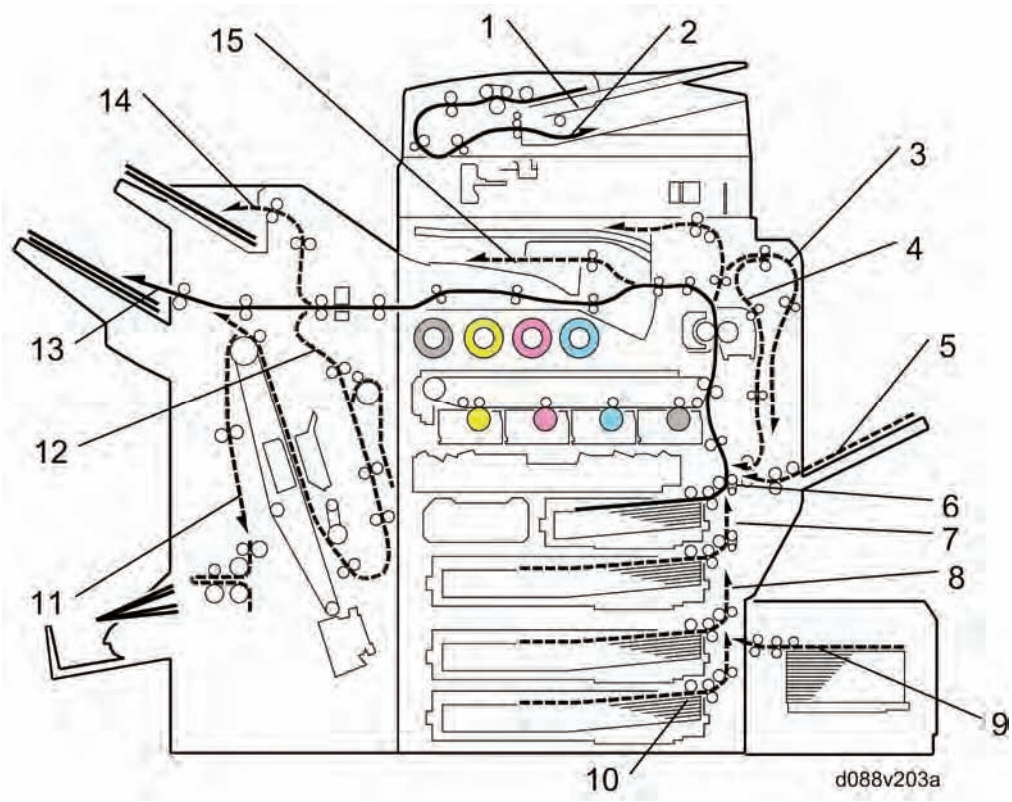

1. Original tray 2. Original exit tray 3. Duplex inverter 4. Duplex feed 5. By-pass tray feed 6. Tray 1 feed 7. Tray 2 feed 8. Tray 3: Optional paper feed unit/LCT	9. Tray 5: Optional LCT 1200 10. Tray 4: Optional paper feed unit 11. Finisher booklet stapler (Optional) 12. Finisher stapler (Optional) 13. Finisher upper tray (Optional) 14. Finisher proof tray (Optional) 15. Inner Tray

The 2000/3000-sheet (booklet) finisher and 1000-sheet finisher require the bridge unit and one from the two-tray paper feed unit or the LCT.

WWW.SERVICE-MANUAL.NET

1.2.3 DRIVE LAYOUT

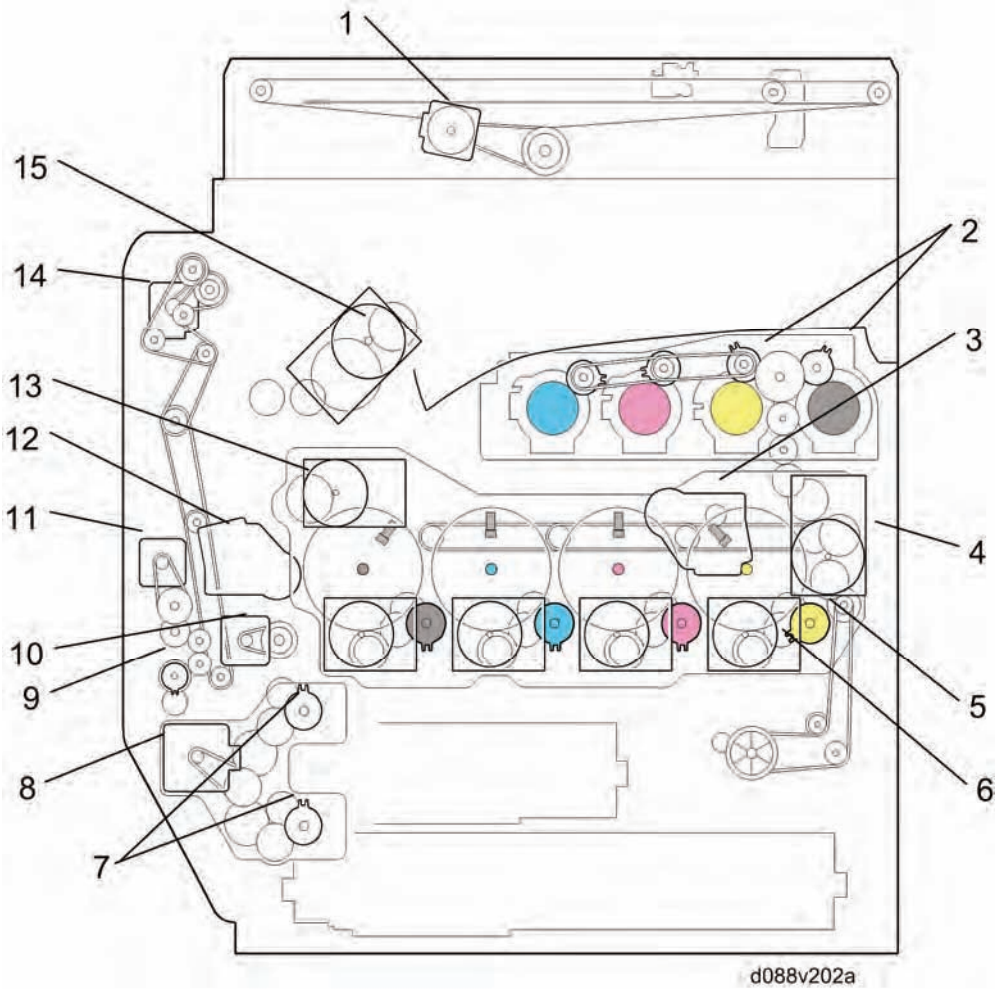

1. Scanner motor:	Drives the scanner unit.
2. Toner supply clutch-K and -CMY:	Turns on/off the drive power to the toner supply unit (K and -CMY).
3.ITB (Image Transfer Belt) contact motor:	Moves the ITB into contact and away from the color PCDUs.
4. Toner transport motor:	Drives the toner attraction pumps and the toner collection coils from the PCDUs, from the transfer belt unit, and inside the toner collection bottle. Also rotates the toner bottles.
5. Development clutch (K, Y, M, C):	Turns on/off the drive power to the development unit (K, Y, M, C).
6. Drum/Development drive	Drives the color drum unit and development unit (K, Y,

WWW.SERVICE-MANUAL.NET

motor (K, Y, M, C)	M, C).
7. Paper feed clutch	Switches the drive power between tray 1 and tray 2.
8. Paper feed motor:	Drives the paper feed mechanisms (tray 1/tray 2).
9. By-pass feed clutch:	Turns on/off the drive power to the by-pass pick-up, feed and separation rollers.
10. Registration motor:	Drives the registration roller.
11. By-pass/duplex feed motor:	Drives the by-pass pick-up, feed and separation roller, and duplex transport rollers.
12. Paper transfer contact motor:	Moves the paper transfer roller in contact with the image transfer belt.
13. ITB drive motor:	Drives the image transfer belt unit.
14. Duplex inverter motor	Drives the duplex inverter rollers and duplex transport rollers.
15. Fusing/paper exit motor:	Drives the fusing unit and paper exit section.

WWW.SERVICE-MANUAL.NET

1.3 MACHINE CODES AND PERIPHERALS CONFIGURATION

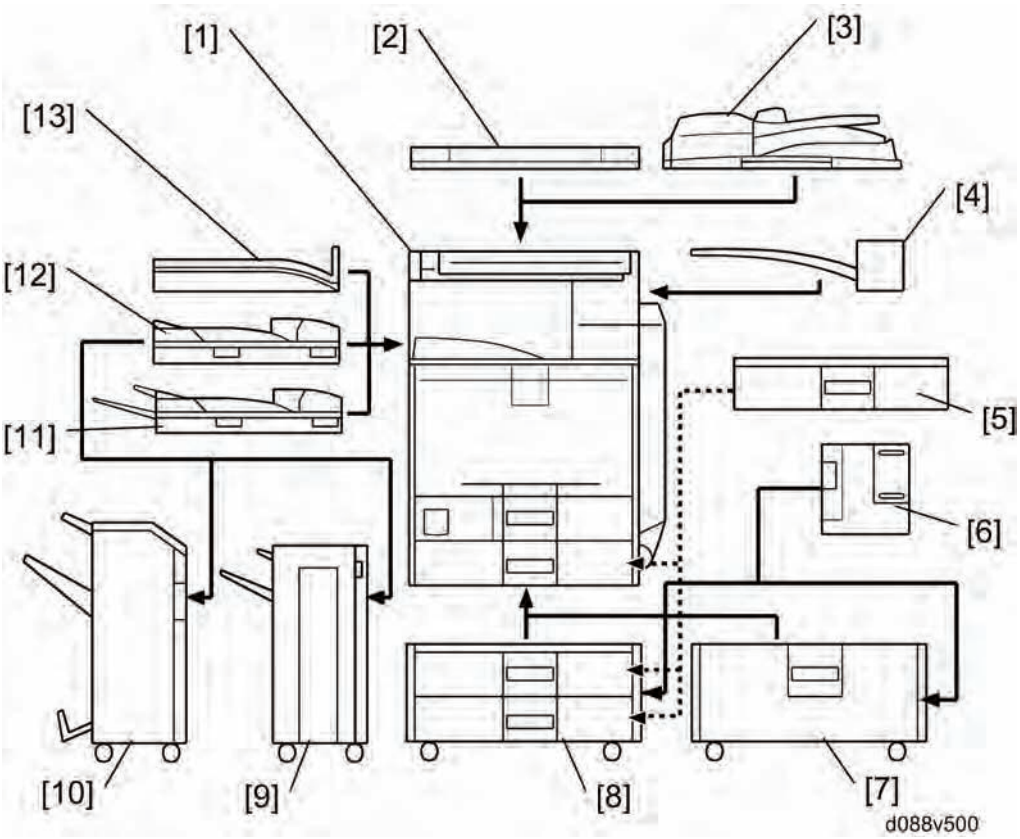

Item	Machine Code	Call out	Remarks
Mainframe	D088/D089	[1]	-
Platen cover	G329	[2]	One from the two
ARDF	D540	[3]	
2000(booklet)/3000-sheet finisher	B804/B805	[10]	One from [9] and [10]; Requires [11] and one from [7] and [8]
Punch unit: 3/2 holes	B702-17	-	Requires [10]
Punch unit: 4/2 holes	B702-27	-	Requires [10]
Punch unit: 4 holes	B702-28	-	Requires [10]

WWW.SERVICE-MANUAL.NET

Item	Machine Code	Call out	Remarks
1000-sheet finisher	B408	[9]	One from [9] and [10]; Requires [11] and one from [7] and [8]
2000-sheet LCT	D538	[7]	One from the two
Two-tray paper feed unit	D537	[8]	
1200-sheet LCT	D539	[6]	Requires [7] or [8]
Envelope feeder	D547	[5]	Requires Tray 2 of the Mainframe or [8]
1-bin tray	D536	[4]	-
Bridge unit	D386	[12]	One from the three
Shift tray	D388	[13]	
Side tray	D542	[11]	
Scanner accessibility option	D423	-	-
Card reader bracket	D547	-	-
Optional counter interface unit	B870	-	-
Key counter bracket	A674	-	-

WWW.SERVICE-MANUAL.NET

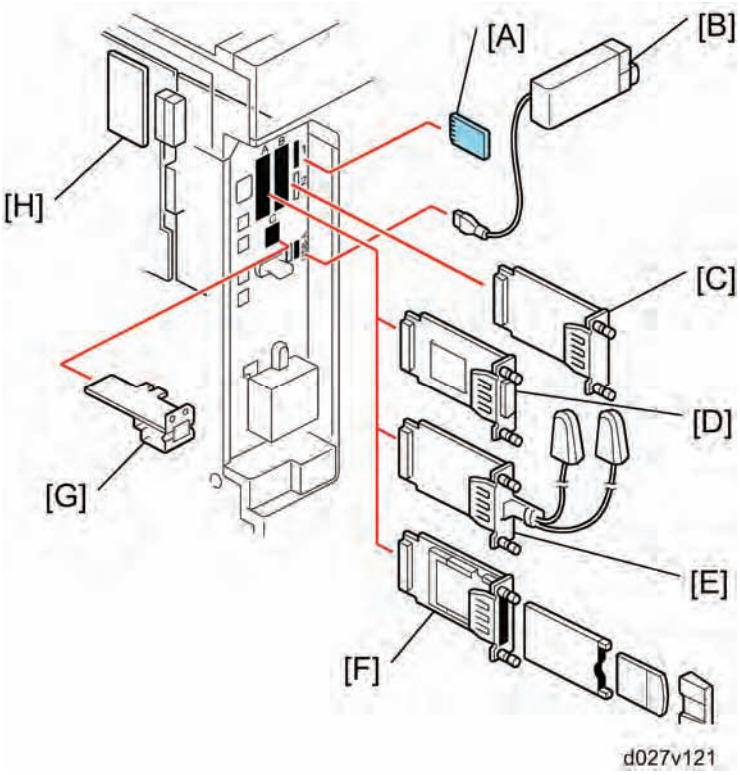

Item	Machine code	Call out	Remark
USB2.0/SD Slot	D546-23	[B]	In USB A (front)
Gigabit Ethernet	D377-21	[G]	-
IEEE 1284	B679-17	[D]	You can only install one of these at a time.
Wireless LAN (IEEE 802.11a/g)	D377-01 (NA) D377-02 (EU/AA)	[E]	
Bluetooth	B826-17	[F]	
File Format Converter	D377-04	[C]	-
PostScript 3	D546-09 (NA) D546-10 (EU) D546-11 (AA)	[A]	You can only install one from the five (SD card slot 1) Security SD Card (Data Overwrite Security and HDD Encryption) is in SD card slot 1 by default. If multiple applications are
Security SD Card (Standard)	-		
PictBridge	D546-21		
IPDS Unit	D546-05 (NA)		

WWW.SERVICE-MANUAL.NET

	D546-06 (EU) D546-07 (AA)		required, merge all applications in one SD card with SP mode. (☛ SD Card Appli Move)
PDF Direct	This card is included in [B] D546-23.		
Browser Unit	D403-05 (NA) D403-06 (EU) D403-07 (AA)	-	In SD card slot 2 Remove it from slot 2 after installing.
VM Card (Standard)	-	-	SD card slot 2 This SD card is not installed in SD slot 2 by factory default. This card should be installed in SD slot 2 at machine installation.

WWW.SERVICE-MANUAL.NET

1.4 GUIDANCE FOR THOSE WHO ARE FAMILIAR WITH PREDECESSOR PRODUCTS

Machine D088/D089 is a successor model to Machine D027/D029. If you have experience with the predecessor products, the following information will be of help when you read this manual.

Different Points from Predecessor Products

	D088/D089	D027/D029
Security Card	Standard	Optional
VM Card	Standard	Optional
Safety shutdown function	Available	Not available

WWW.SERVICE-MANUAL.NET

INSTALLATION

REVISION HISTORY		
Page	**Date**	**Added/Updated/New**
10	01/26/2011	Corrected Developer and Toner Bottles instructions.
71	2/24/2011	USB 2.0 installation.
97 ~ 98	6/14/2011	Browser Unit
100 ~ 134	4/21/2011	Scanner Accessibility Option Type C5000 D423

WWW.SERVICE-MANUAL.NET

WWW.SERVICE-MANUAL.NET

2. INSTALLATION

2.1 INSTALLATION REQUIREMENTS

2.1.1 ENVIRONMENT

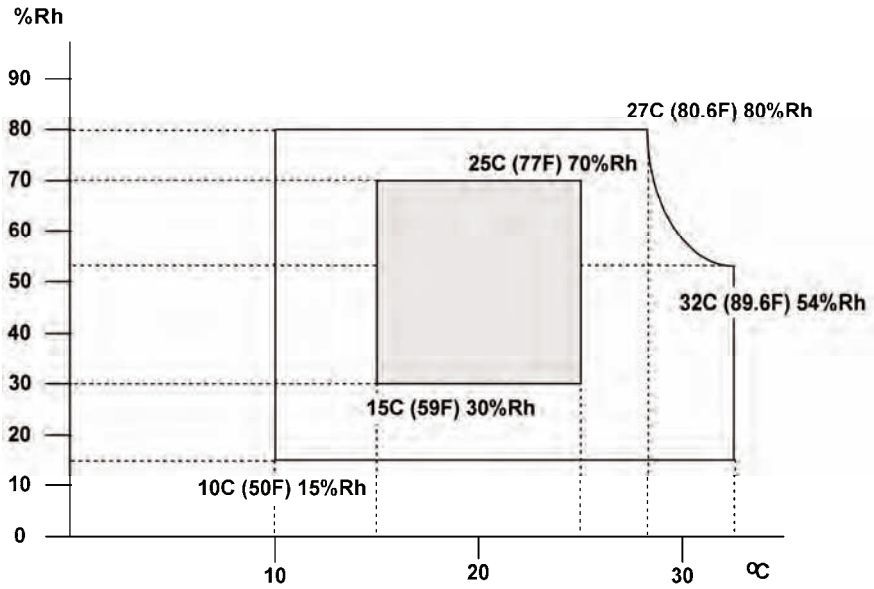

1. Temperature Range: 10°C to 32°C (50°F to 89.6°F)
2. Humidity Range: 15% to 80% RH
3. Ambient Illumination: Less than 1500 lux (do not expose to direct sunlight)
4. Ventilation: 3 times/hr/person or more
5. Do not let the machine get exposed to the following:
   1) Cool air from an air conditioner
   2) Heat from a heater
6. Do not install the machine in areas that are exposed to corrosive gas.
7. Install the machine at locations lower than 2,000 m (6,560 ft.) above sea level.
8. Install the machine on a strong, level base. (Inclination on any side must be no more than 5 mm.)
9. Do not install the machine in areas that get strong vibrations.

Important

- Do not leave the toner bottle in a place directly exposed to sunlight.
- The toner bottle must be kept at a temperature of 35°C (95°F) or less. Be careful not to leave the toner bottle in a hot place when transporting or storing it.

WWW.SERVICE-MANUAL.NET

2.1.2 MACHINE LEVEL

Front to back: Within 5 mm (0.2")

Right to left: Within 5 mm (0.2")

2.1.3 MACHINE SPACE REQUIREMENTS

⚠CAUTION

- This machine, which uses high voltage power sources, can generate ozone gas. High ozone density is harmful to human health. Therefore, the machine must be installed in a well-ventilated room.

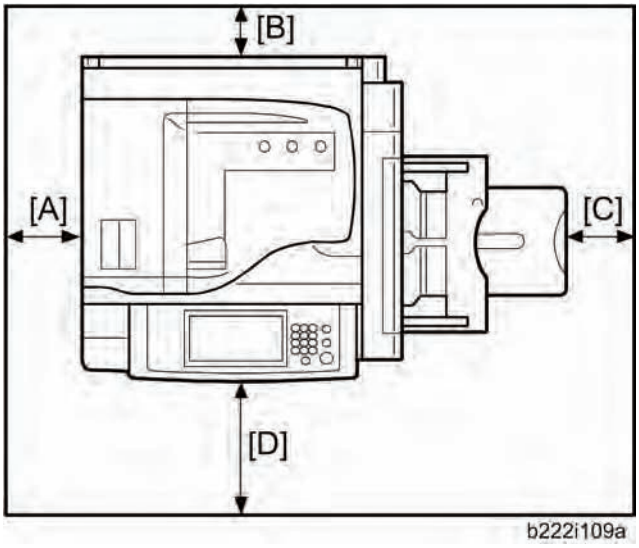

A: Over 100 mm (3.9")

B: Over 100 mm (3.9")

C: Over 100 mm (3.9")

D: Over 750 mm (29.5")

Put the machine near the power source with the clearance shown above.

WWW.SERVICE-MANUAL.NET

2.1.4 MACHINE DIMENSIONS

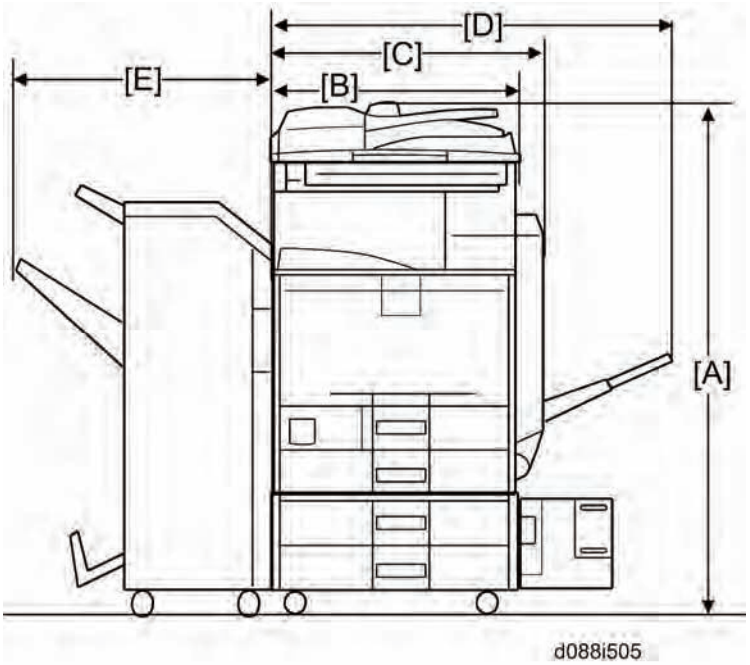

[A]: 670 mm (mainframe) + 260 mm (PFU) + 135 mm (ARDF)

[B]: 580 mm

[C]: 670 mm

[D]: 1110 mm

[E]: 657 mm

2.1.5 POWER REQUIREMENTS

⚠ CAUTION

- Insert the plug firmly in the outlet.
- Do not use an outlet extension plug or cord.
- Ground the machine.

1. Input voltage level:

   120 to 127 V, 60 Hz: More than 12 A

   220 V to 240 V, 50 Hz/60 Hz: More than 8 A
2. Permissible voltage fluctuation: +8.66 %/ -10 %
3. Do not put things on the power cord.

WWW.SERVICE-MANUAL.NET

2.2 OPTIONAL UNIT COMBINATIONS

2.2.1 MACHINE OPTIONS

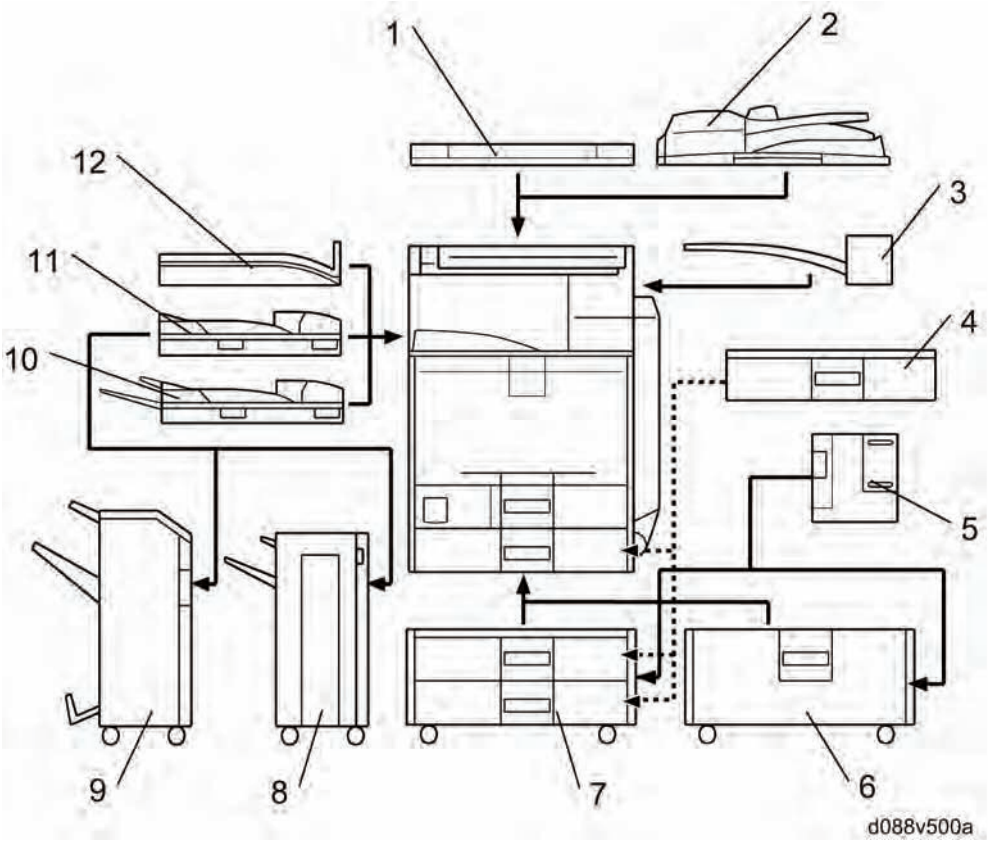

No.	Options	Remarks
1	Platen cover	One from No.1 or No.2
2	ARDF	
3	1-bin tray unit	-
4	Envelope feeder	Requires Tray 2 of the Mainframe or No.7
5	1200-sheet LCT	Requires No.6 or No.7
6	2000-sheet LCT	One from No.6, No.7
7	Two-tray paper feed unit	
8	1000-sheet finisher	One from No.8, No.9;

WWW.SERVICE-MANUAL.NET

9	2000(booklet)/3000-sheet finisher	Requires No.11 and one from No.6 or No.7
10	Side Tray	One from No.10, No.11 or No.12
11	Bridge unit	
12	Shift tray	

2.2.2 CONTROLLER OPTIONS

No.	Options	Remarks
1	Bluetooth	One from the three (I/F Slot A)
2	IEEE 802.11a/g	
3	IEEE 1284	
4	File Format Converter	I/F Slot B
5	Gigabit Ethernet	I/F Slot C
6	Security SD Card (Standard)	One from the five (SD card slot 1) ▪ Security SD Card (Data Overwrite Security and HDD Encryption) is in SD card slot 1 by default. If multiple applications are required, merge all applications in one SD card with SP mode. (☛ p.2-78 "SD Card Appli Move")
7	PostScript 3	
8	PictBridge Option	
9	IPDS Unit Type C5501	
10	PDF Direct (child option of USB2.0/SD Slot)	
11	Browser Unit Type E	SD card slot 2 (during installation only)
12	VM Card (Standard)	SD card slot 2 This SD card is not installed in SD slot 2 by factory default. This card should be installed in SD slot 2 at machine installation.

For details about the slot locations, see Controller Options.

WWW.SERVICE-MANUAL.NET

2.2.3 OTHER OPTIONS

No.	Options	Remarks
1	Optional Counter Interface Unit	-
2	USB2.0/SD Slot	-
3	Key Counter Bracket Type H	-
4	Card Reader Bracket Type C5501	-

2.2.4 FAX OPTIONS

No.	Options	Remarks
1	Fax Option Type C5501	-
2	G3 Interface Unit Type C5000	-
3	*Handset Type 1018	Requires No.1.
4	*Memory Unit Type B	Requires No.1.

WWW.SERVICE-MANUAL.NET

2.3 COPIER INSTALLATION

⚠CAUTION

- Make sure that the image transfer belt is in its correct position (away from the PCDUs) before you move the machine. Otherwise, the image transfer belt and the black PCDU can be damaged.

2.3.1 POWER SOCKETS FOR PERIPHERALS

⚠CAUTION

- Rating voltage for peripherals.
- Make sure to plug the cables into the correct sockets.

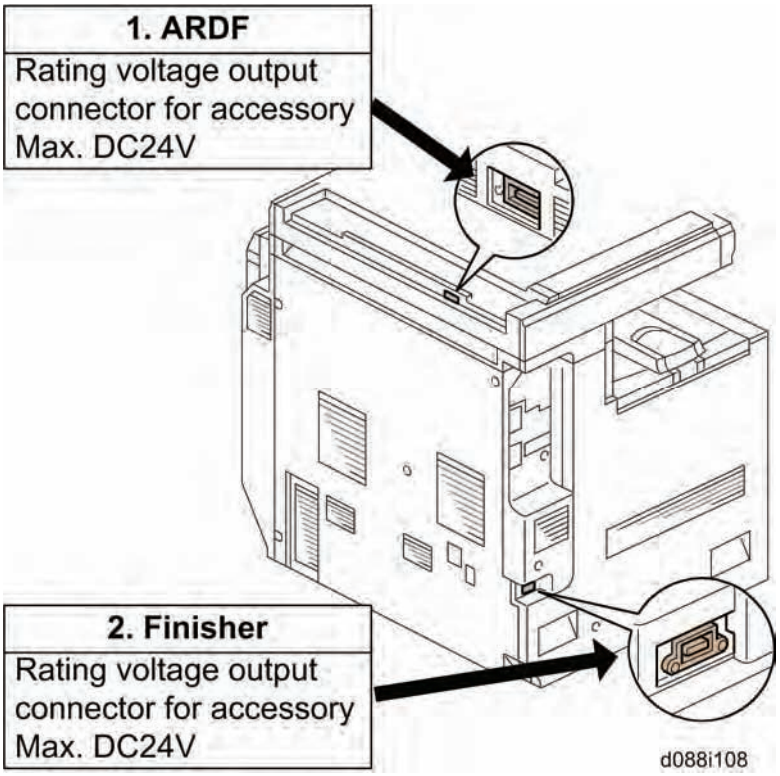

WWW.SERVICE-MANUAL.NET

2.3.2 INSTALLATION FLOW CHART

This flow chart shows the best procedure for installation.

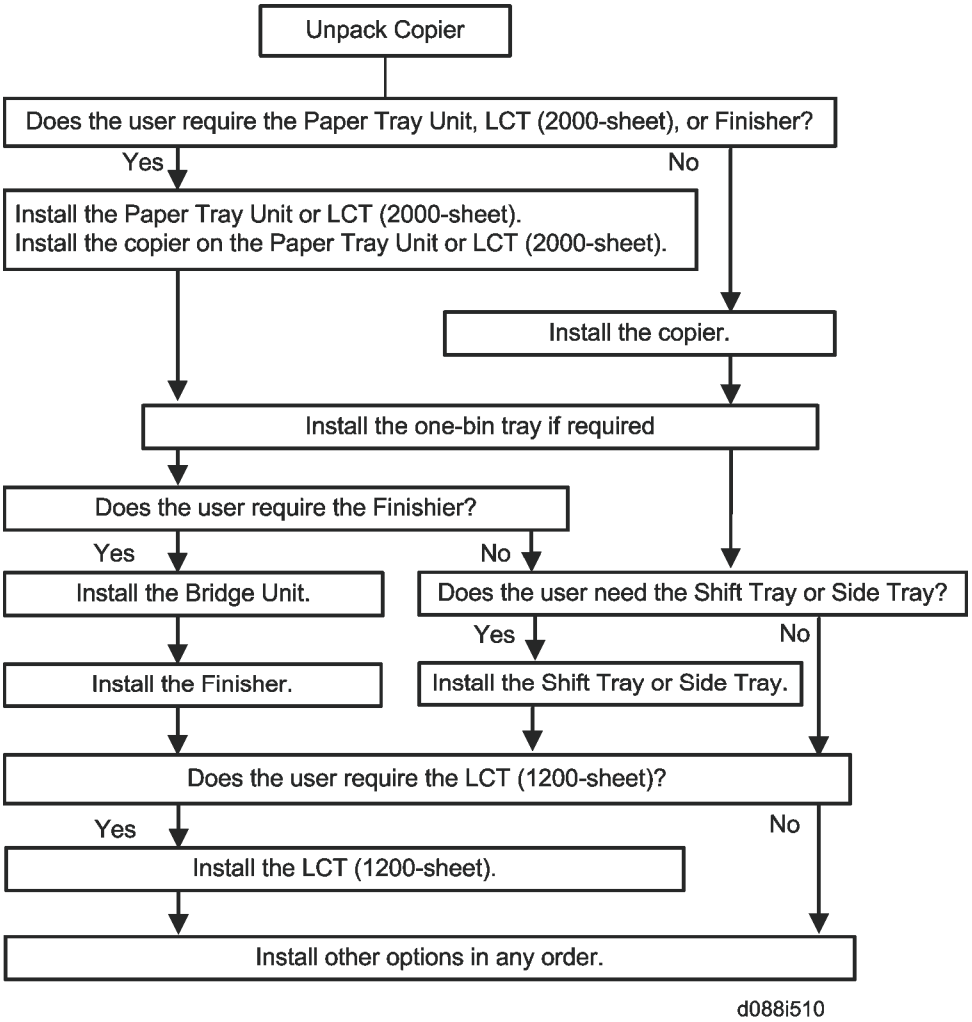

You need the optional paper tray unit or the LCT if you want to install the finisher (B408, B804 or B805) or 1200-sheet LCT (D539).

The punch unit is for 2000-sheet booklet finisher (B804) and 3000-sheet finisher (B805).

WWW.SERVICE-MANUAL.NET

2.3.3 INSTALLATION PROCEDURE

CAUTION

- Remove the tape from the development units before you turn the main switch on. The development units can be severely damaged if you do not remove the tape.

Put the machine on the paper tray unit or the LCT first if you install an optional paper tray unit or the optional LCT at the same time. Then install the machine and other options.

Note

- Keep the shipping retainers after you install the machine. You may need them in the future if you transport the machine to another location.

Tapes and Retainers

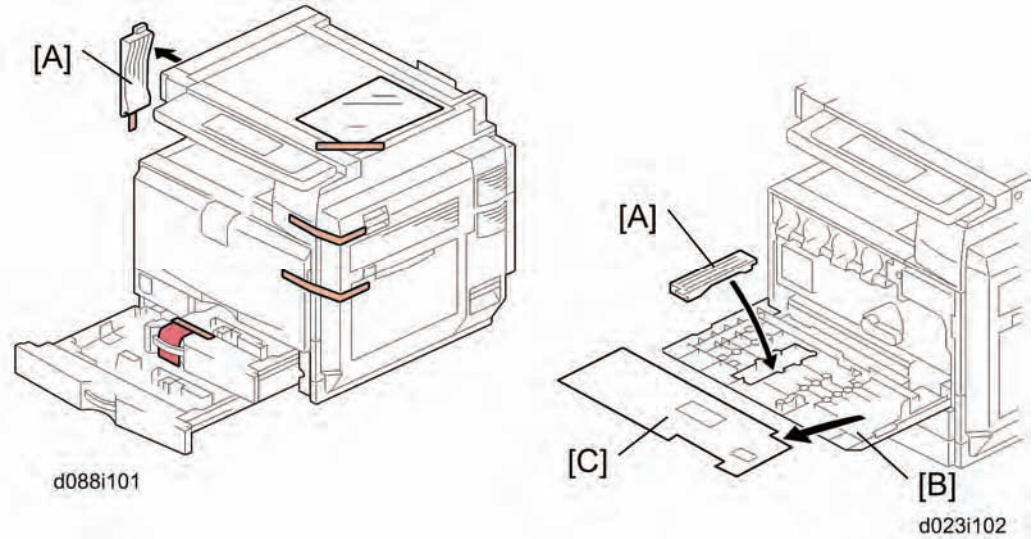

1. Remove all the tapes and retainers on the machine.
2. Remove all the tapes and retainers in trays 1 and 2, and then take out the power cord from tray 1 (if applicable).
3. Remove the scanner unit stay [A].
4. Open the front door [B], and then remove the jam location sheet [C].
5. Keep the scanner unit stay [A] inside the front door [B].
6. Reattach the jam location sheet.
7. Close the front door.

WWW.SERVICE-MANUAL.NET

Developer and Toner Bottles

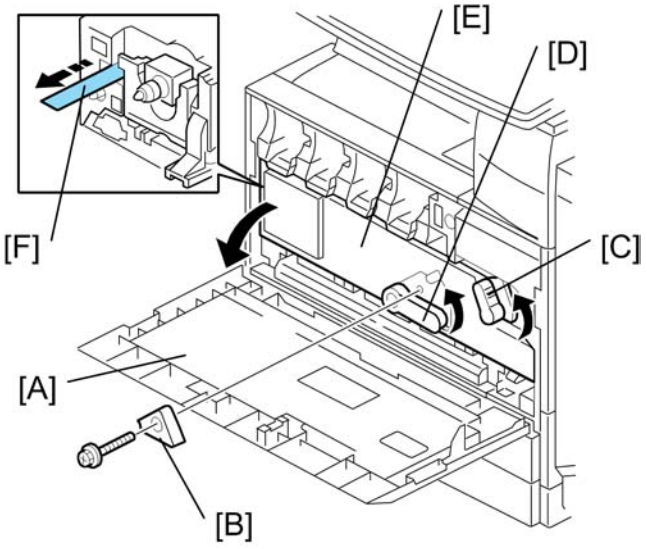

d027i106

1. Open the front door [A].
2. Remove the stopper [B] (x 1).

   Note

   - This stopper locks the drum positioning plate lever.
3. Release the image transfer unit lock lever [C], and turn the drum positioning plate lever [D] counterclockwise.
4. Open the drum positioning plate [E].
5. Remove tape [F] from the BK Development Unit.

   Note

   - When you remove the tape from the development unit, hold the development unit with your hand, and then pull the tape.
6. Close the drum positioning plate. Then lock the image transfer unit lock and turn the drum positioning plate lever clockwise.
7. Lock the drum positioning plate lever with the stopper [B] (x 1).
8. Shake each toner bottle five or six times.

WWW.SERVICE-MANUAL.NET

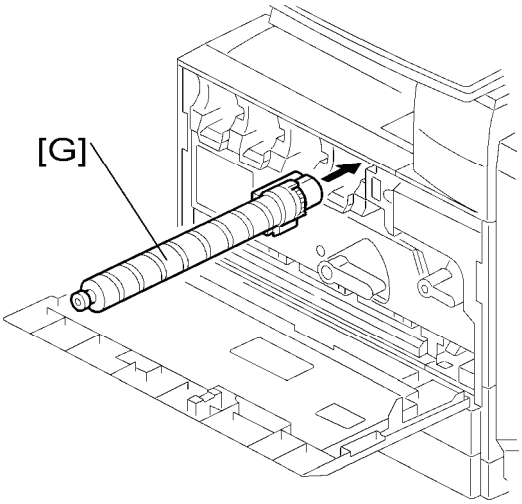

9. Install each toner bottle [G] in the machine.

Note

- The black toner bottle is unique for the D088/D089 models. The black toner bottle for the previous models (D027/D029) cannot be used in the D088/D089 models.
- The other color toner bottles are common with previous models.

10. Close the front door.

Paper Trays

1. Pull each paper tray out. Then adjust the side guides and end guide to match the paper size.

Note

- To move the side guides, first pull out the tray fully. Then push down the green lock at the rear inside the tray.

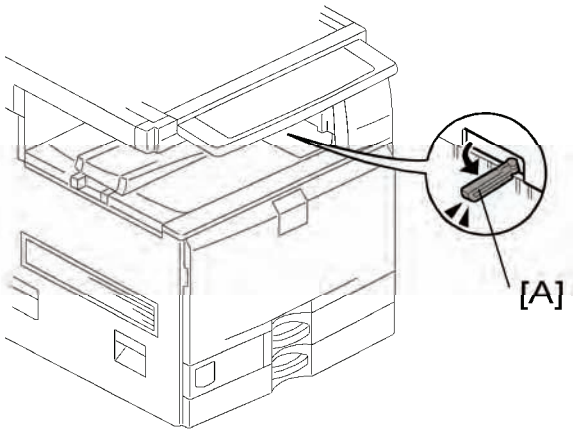

2. Pull out the feeler [A] for the output tray full detection mechanism.

WWW.SERVICE-MANUAL.NET

Emblem and Decals

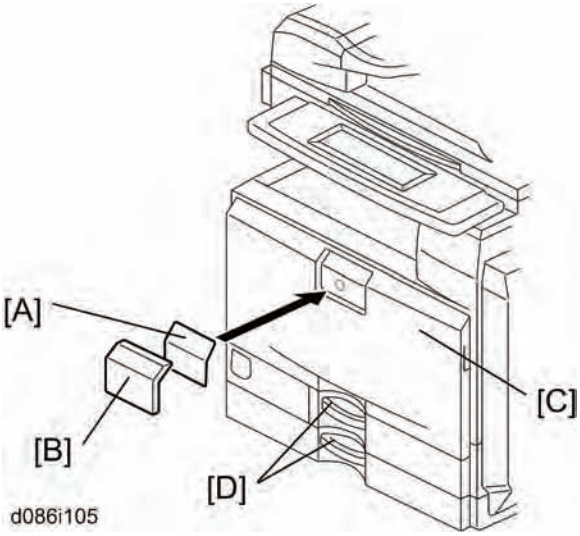

1. Attach the correct emblem [A] and the cover [B] to the front door [C] of the machine, if the emblem is not attached.
2. Attach the correct paper tray number and size decals to the paper trays [D].

Note

- Paper tray number and size decals are also used for the optional paper tray or the optional LCT. Keep these decals for use with these optional units.

Initialize the Developer

1. Plug in the machine.
2. Make sure that the platen or ARDF is closed and the main power is turned off.
3. Turn the main power switch on. The machine automatically starts the initialization procedure. The Start button LED (◉) turns green when this procedure has finished.
4. Make copies of image samples (text, photo, and text/photo modes).
5. Do the Automatic Color Calibration process (ACC) as follows:
   1). Print the ACC test pattern (User tools > Maintenance > ACC > Start).
   2). Put the printout on the exposure glass.
   3). Put 10 sheets of white paper on top of the test chart.
   4). Close the ARDF or the platen cover.
   5). Press "Start Scanning" on the LCD panel. The machine starts the ACC.
6. Check that the sample image has been copied normally.

WWW.SERVICE-MANUAL.NET

Settings Relevant to the Service Contract

Change the necessary settings for the following SP modes if the customer has made a service contract.

Note

- You must select one of the counter methods (developments/prints) in accordance with the contract (☛ SP5-045-001).

Item	SP No.	Function	Default
Counting method	SP5-045-001	Specifies if the counting method used in meter charge mode is based on developments or prints.	"0": Developments
A3/11" x 17" double counting	SP5-104-001	Specifies whether the counter is doubled for A3/11" x 17" paper. When you have to change this setting, contact your supervisor.	"No": Single counting
Service Tel. No. Setting	SP5-812-001 through 004	5812-002 programs the service station fax number. The number is printed on the counter list when the meter charge mode is selected. This lets the user fax the counter data to the service station.	

WWW.SERVICE-MANUAL.NET

SP Operation Sound On/Off Setting

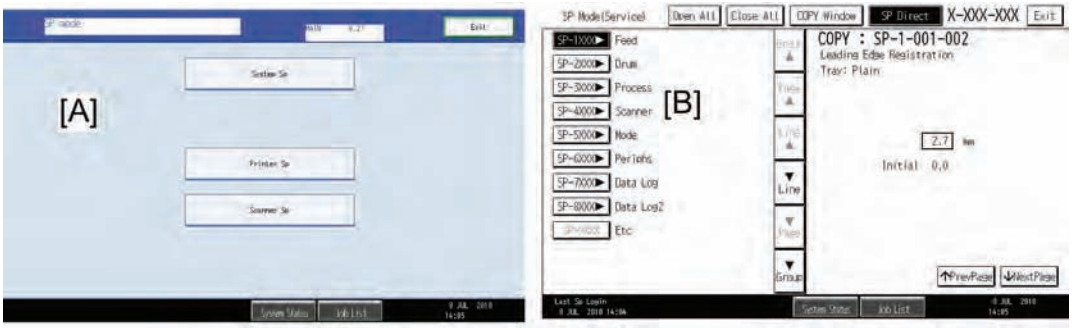

d086i120

To turn off the SP Operation Sound

1. Enter the SP mode.
2. On the top menu screen [A], hold down the "Clear/Stop" button until you hear a beep sound. This turns off the SP operation sound.
3. No SP operation sound can be heard in all levels [B] (SPx, SPx-xxx and SPx-xxx-xxx) of the SP mode.

To turn on the SP Operation Sound

1. Enter the SP mode.
2. On the top menu screen [A], hold down the "Clear/Stop" button again until you hear a beep sound. This turns on the SP operation sound.
3. SP operation sound can be hard in all levels [B] (SPx, SPx-xxx and SPx-xxx-xxx) of the SP mode.

WWW.SERVICE-MANUAL.NET

Settings for @Remote Service

Note

- Prepare and check the following check points before you visit the customer site. For details, ask the @Remote key person.

Check points before making @Remote settings

1. The setting of SP5816-201 in the mainframe must be "0".
2. Device ID2 (SP5811-003) must be correctly programmed.
   - 6 spaces must be put between the 3-digit prefix and the following 8-digit number (e.g. xxx_____xxxxxxxx).
   - ID2 (SP5811-003) and the serial number (SP5811-001) must be the same (e.g. ID2: A01_____23456789 = serial No. A0123456789)
3. The following settings must be correctly programmed.
   - Proxy server IP address (SP5816-063)
   - Proxy server Port number (SP5816-064)
   - Proxy User ID (SP5816-065)
   - Proxy Password (SP5816-066)
4. Get a Request Number

Execute the @Remote Settings

1. Enter the SP mode.
2. Input the Request number which you have obtained from @Remote Center GUI, and then enter [OK] with **SP5816-202**.
3. Confirm the Request number, and then click [EXECUTE] with **SP5816-203**.
4. Check the confirmation result with **SP5816-204**.

WWW.SERVICE-MANUAL.NET

Value	Meaning	Solution/ Workaround
0	Succeeded	-
1	Request number error	Check the request number again.
3	Communication error (proxy enabled)	Check the network condition.
4	Communication error (proxy disabled)	Check the network condition.
5	Proxy error (Illegal user name or password)	Check Proxy user name and password.
6	Communication error	Check the network condition.
8	Other error	See "SP5816-208 Error Codes" below this.
9	Request number confirmation executing	Processing… Please wait.

5. Make sure that the screen displays the Location Information with **SP5816-205** only when it has been input at the Center GUI.
6. Click [EXECUTE] to execute the registration with **SP5816-206**.
7. Check the registration result with **SP5816-207**.

WWW.SERVICE-MANUAL.NET

Value	Meaning	Solution/ Workaround
0	Succeeded	-
1	Request number error	Check the request number again.
2	Already registered	Check the registration status.
3	Communication error (proxy enabled)	Check the network condition.
4	Communication error (proxy disabled)	Check the network condition.
5	Proxy error (Illegal user name or password)	Check Proxy user name and password.
8	Other error	See "SP5816-208 Error Codes" below this.
9	Request number confirmation executing	Processing… Please wait.

8. Exit the SP mode.

SP5816-208 Error Codes

WWW.SERVICE-MANUAL.NET

Cause	Code	Meaning	Solution/ Workaround
Operation Error, Incorrect Setting	-12002	Inquiry, registration attempted without acquiring Request No.	Obtain a Request Number before attempting the Inquiry or Registration.
	-12003	Attempted registration without execution of a confirmation and no previous registration.	Perform Confirmation before attempting the Registration.
	-12004	Attempted setting with illegal entries for certification and ID2.	Check ID2 of the mainframe.
	-12005	@Remote communication is prohibited. The device has an Embedded RC gate-related problem.	Make sure that "Remote Service" in User Tools is set to "Do not prohibit".
	-12006	A confirmation request was made after the confirmation had been already completed.	Execute registration.
Operation Error, Incorrect Setting	-12007	The request number used at registration was different from the one used at confirmation.	Check Request No.
	-12008	Update certification failed because mainframe was in use.	Check the mainframe condition. If the mainframe is in use, try again later.
	-12009	ID2 mismatch between an individual certification and NVRAM	Write a common certification, and then execute the confirmation request to the @Remote Center.
	-12010	Certification area is not initialized.	Write a common certification after initializing the certification area, and then execute the confirmation request to the

WWW.SERVICE-MANUAL.NET

Cause	Code	Meaning	Solution/ Workaround
			@Remote Center.
Error Caused by Response from GW URL	-2385	Other error	
	-2387	Not supported at the Service Center	
	-2389	Database out of service	
	-2390	Program out of service	
	-2391	Two registrations for the same mainframe	Check the registration condition of the mainframe
	-2392	Parameter error	
	-2393	External RCG not managed	
	-2394	Mainframe not managed	
	-2395	Box ID for external RCG is illegal.	
	-2396	Mainframe ID for external RCG is illegal.	
	-2397	Incorrect ID2 format	Check the ID2 of the mainframe.
	-2398	Incorrect request number format	Check the Request No.

WWW.SERVICE-MANUAL.NET

VM Card Installation

The App2Me application must be enabled before it can be used. The VM SD card including App2Me is provided with the main machine.

Do the following procedure if a customer wants to use "App2Me".

1. Turn off the machine if it is in use.

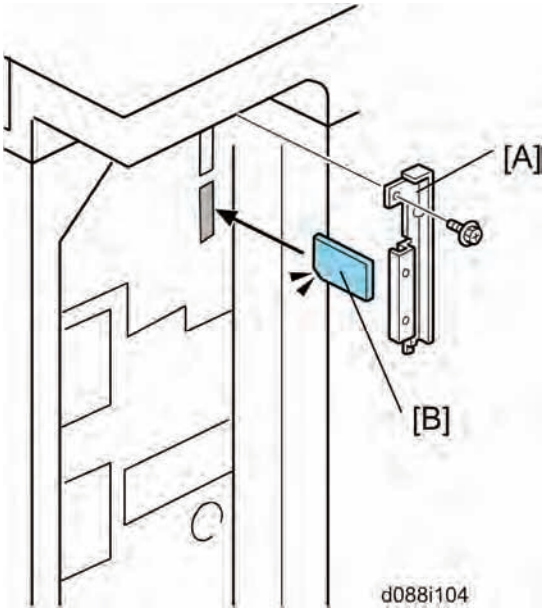

2. Remove the SD slot cover [A] (x 1).
3. Insert the VM SD card [B] in slot 2.
4. Attach the SD slot cover [A] (x 1).
5. Turn on the machine.

Enabling App2Me

The following procedure basically should be done by a customer.

1. Press the [User Tools] key on the operation panel.
2. Touch the "Extended Feature Settings" button twice.
3. Touch the "App2Me" line under the Startup Setting tab.
4. Touch the "Extended Feature Info" tab on the LCD.
5. Touch the "App2Me" line.
6. Set "Auto Start" to "On".
7. Touch the "Exit" button.
8. Exit the "User Tools" settings.

Important

- Do not remove the VM card from Slot 2 (lower slot). The VM card must remain in the machine.

WWW.SERVICE-MANUAL.NET

2.3.4 MOVING THE MACHINE

This section shows you how to manually move the machine from one floor to another floor. See the section "Transporting the Machine" if you have to pack the machine and move it a longer distance.

- Remove all trays from the optional paper feed unit or LCT.
- Remove peripherals physically attached to the main machine: Paper feed unit, LCT and finisher.
- Attach the caster stands for the paper feed unit or LCT if these have been removed before moving the machine.

2.3.5 TRANSPORTING THE MACHINE

Main Frame

1. Do SP 4806-001 to move the scanner carriage from the home position. This prevents dust from falling into the machine during transportation.
2. Remove the toner cartridges. This prevents toner flow into the toner supply tube, which is caused by vibration during transport. This can also cause the tube to be clogged with toner.
3. Make sure there is no paper left in the paper trays. Then fix down the bottom plates with a sheet of paper and tape.
4. Empty the toner collection bottle. Then attach securing tape to stop the toner bottle from coming out.
5. Do one of the following:
   - Attach shipping tape to the covers and doors.
   - Shrink-wrap the machine tightly.

Note

- After you move the machine, make sure you do the "Auto Color Registration" as follows. This optimizes color registration.
- 1. Do the "Forced Line Position Adj. Mode c" (SP2-111-3).
- 2. Then do the "Forced Line Position Adj. Mode a" (SP2-111-1).
  To check if SP 2-111-1 was successful, watch the screen during the process. A message is displayed at the end. Also, you can check the result with SP 2-194-10 to -12.
- Make sure that the side fences in the trays are correctly positioned to prevent color registration errors.

WWW.SERVICE-MANUAL.NET

2.4 PAPER FEED UNIT PB3010 (D537)

2.4.1 ACCESSORY CHECK

Check the quantity and condition of the accessories against the following list.

No.	Description	Q'ty
1	Securing bracket	2
2	Screw (M4x10)	2
3	Spring Washer Screw	1

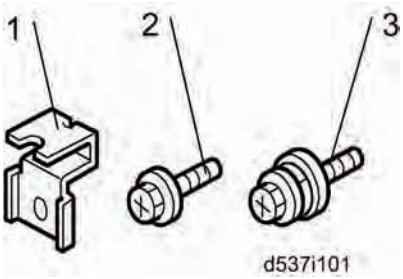

2.4.2 INSTALLATION PROCEDURE

⚠ CAUTION

- Turn off the main switch of the copier and unplug the power cord before you start the installation procedure.
- You need two or more persons to lift the copier. The copier is highly unstable when lifted by one person, and may cause injury or property damage.
- Do not lift the copier with the paper feed unit installed. The handle and grips may be damaged.

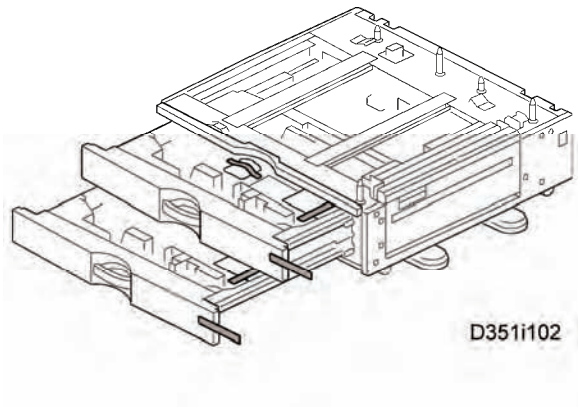

1. Remove all tape on the paper feed unit.

WWW.SERVICE-MANUAL.NET

2. Remove the paper trays and remove all tape and padding.

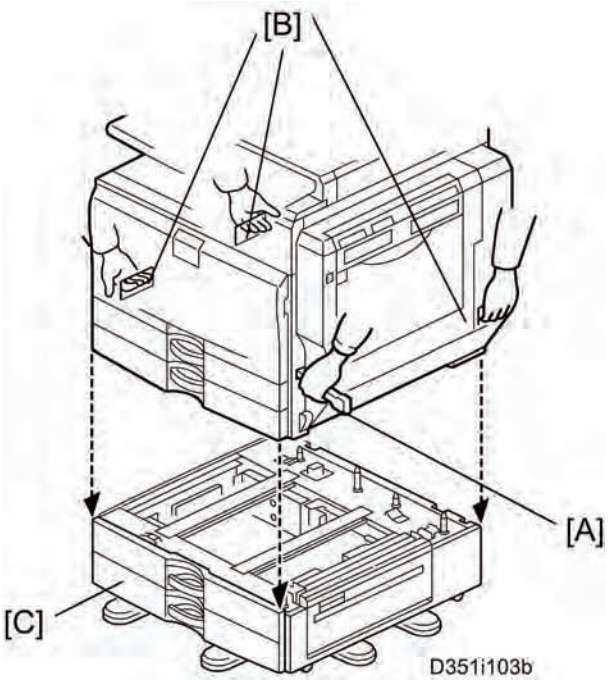

3. Grasp the handle [A] and grips [B] of the machine.
4. Lift the copier and install it on the paper feed unit [C].

Note

- Hold the handle and grips of the machine when you lift and move the machine.

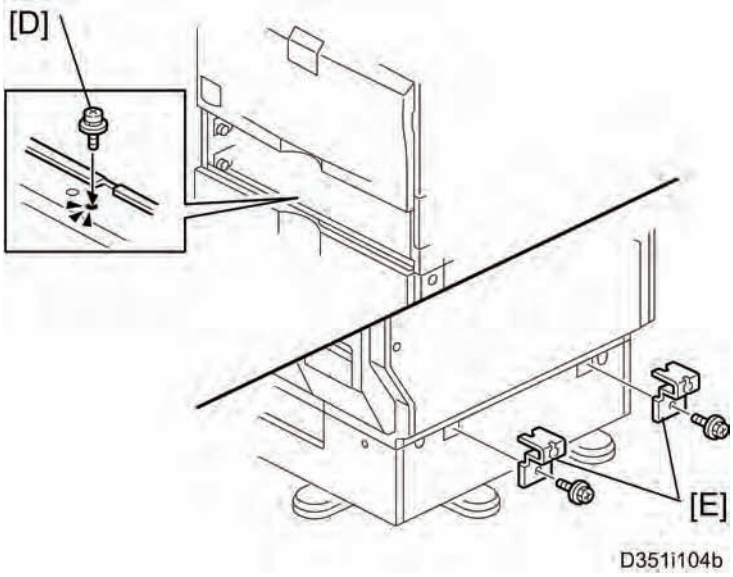

5. Remove trays 1 and 2 of the machine.
6. Fasten the spring washer screw [D].
7. Reinstall all trays.
8. Attach the securing brackets [E] (x 1 each; M4x10).

WWW.SERVICE-MANUAL.NET

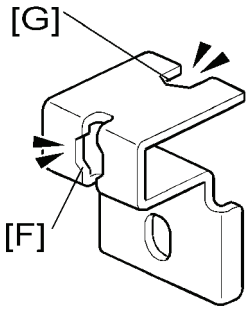

Note

- One of the securing brackets is used as a securing tool (the cutout [F] is used in step 6). But the cutout [G] is for attaching the tray heater. Therefore, attach the securing brackets [E] after installing the tray heater if you install the tray heater.

9. Load paper into the paper feed unit.
10. Turn on the main power switch of the machine.
11. Check the paper feed unit operation and copy quality.

WWW.SERVICE-MANUAL.NET

2.5 ENVELOPE FEEDER EF3000 (D547)

2.5.1 ACCESSORY CHECK

Check the quantity and condition of the accessories against the following list.

No.	Description	Q'ty
1	Envelope feeder	1
2	Paper size decal	1

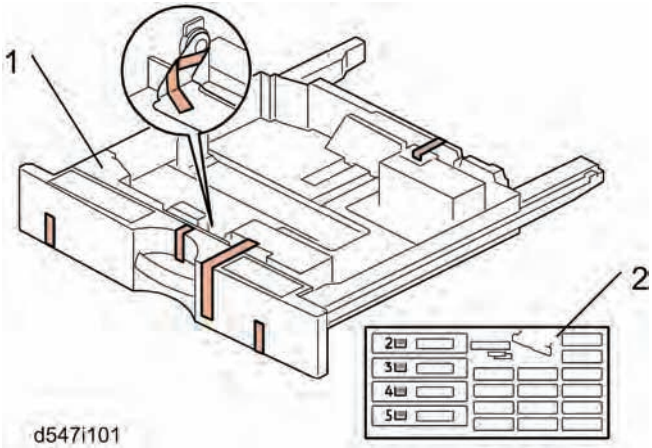

WWW.SERVICE-MANUAL.NET

2.5.2 INSTALLATION PROCEDURE

Note

- This tray can be installed in tray 2 of the copier, or tray 3 or tray 4 of the paper feed unit (D537).
- There is no automatic paper size detection in the envelope feeder (D547). Adjust the paper size for the tray where the envelope feeder is to be installed with User Tools.

1. Remove all tape from the envelope feeder.

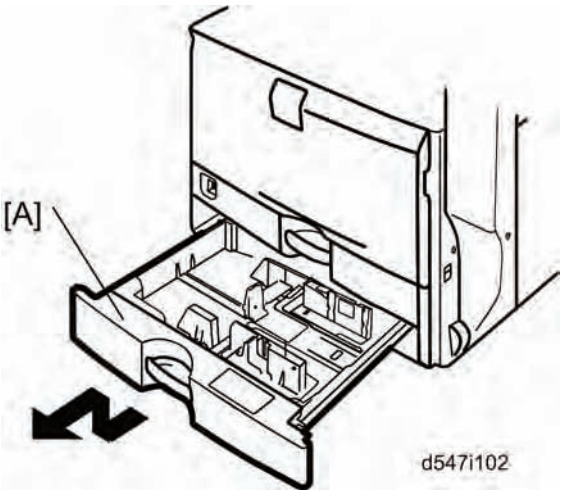

2. Pull out tray 2 [A] from the main machine.

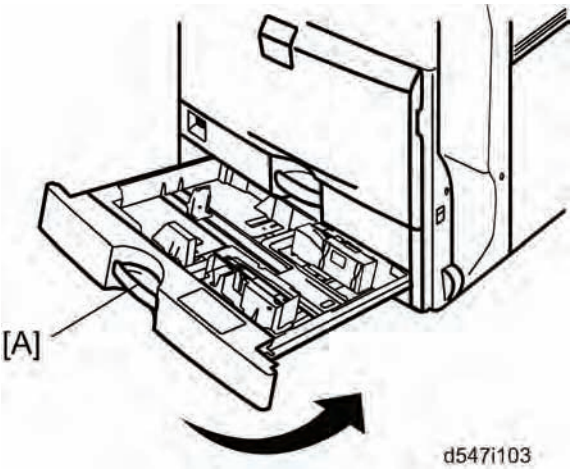

3. Install the envelope feeder [A] into tray 2 of the main machine.
4. Press the "User/Tools" key on the operation panel.
5. Enter "Small Paper Size Tray" under "General Features".
   - Initial Settings > General Features > Small Paper Size Tray
6. Select "On" for the tray where the envelope feeder is installed.
7. Turn the main machine off and on.

WWW.SERVICE-MANUAL.NET

2.6 LCIT PB3110 (D538)

2.6.1 ACCESSORY CHECK

Check the quantity and condition of the accessories against the following list.

No.	Description	Q'ty
1	Securing bracket	2
2	Screw (M4x10)	2
3	Spring washer screw	1

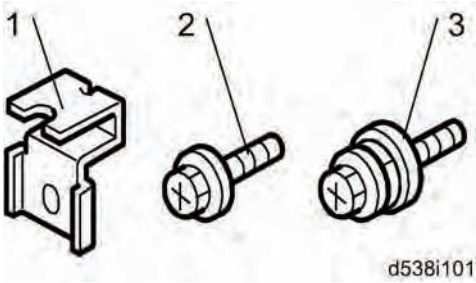

2.6.2 INSTALLATION PROCEDURE

⚠CAUTION

- Turn off the main switch of the copier and unplug the power cord before you start the installation procedure.
- You need two or more persons to lift the copier. The copier is highly unstable when lifted by one person, and may cause injury or property damage.
- Do not lift the copier with the paper feed unit installed. The handle and grips may be damaged.

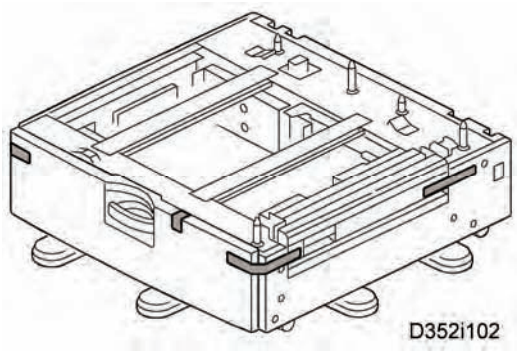

1. Remove all tapes and retainers in the LCT.

WWW.SERVICE-MANUAL.NET

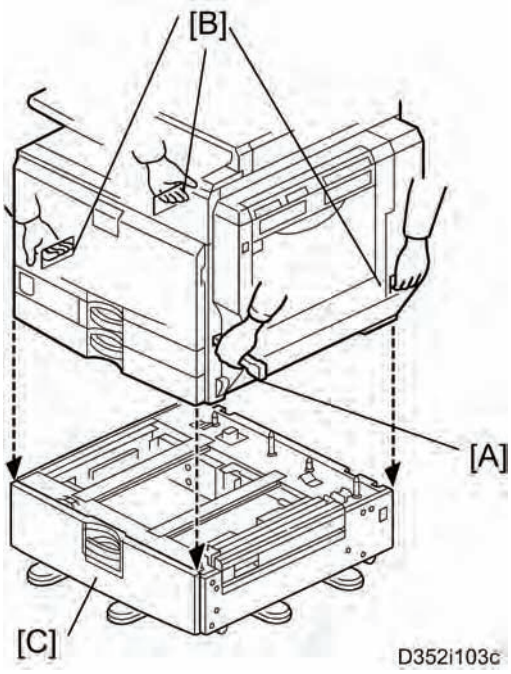

2. Grasp the handle [A] and grips [B] of the machine.
3. Lift the copier and install it on the LCT [C].

Note

- Hold the handle [A] and grips [B] of the machine when you lift and move the machine.

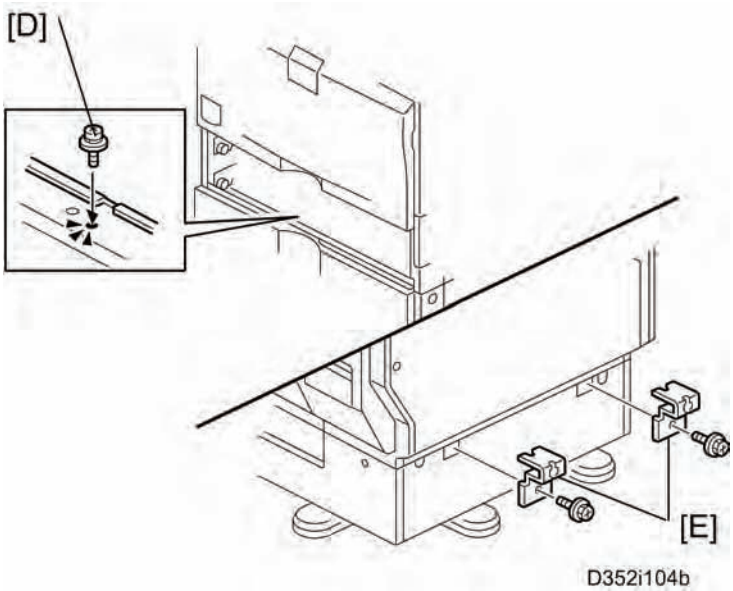

4. Remove trays 1 and 2 of the machine.
5. Fasten the spring washer screw [D].
6. Reinstall all trays.
7. Attach the securing brackets [E] (x 1 each; M4x10).

WWW.SERVICE-MANUAL.NET

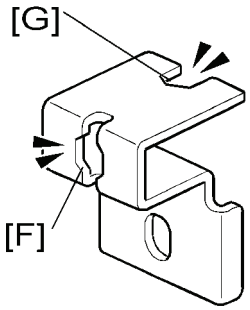

Note

- One of the securing brackets is used as a securing tool (the cutout [F] is used in step 5). But the cutout [G] is for attaching the tray heater. Therefore, attach the securing brackets [E] after installing the tray heater if you install the tray heater.

8. Load paper into the LCT.
9. Turn on the main power switch of the machine.
10. Check the LCT operation and copy quality.

WWW.SERVICE-MANUAL.NET

2.7 LCIT RT3010 (D539)

2.7.1 COMPONENT CHECK

Check the quantity and condition of the components against the following list.

No.	Description	Q'ty
1	Front Bracket	1
2	Rear Bracket	1
3	Stud Screw	4
4	Joint Pin	2
5	LCT	1

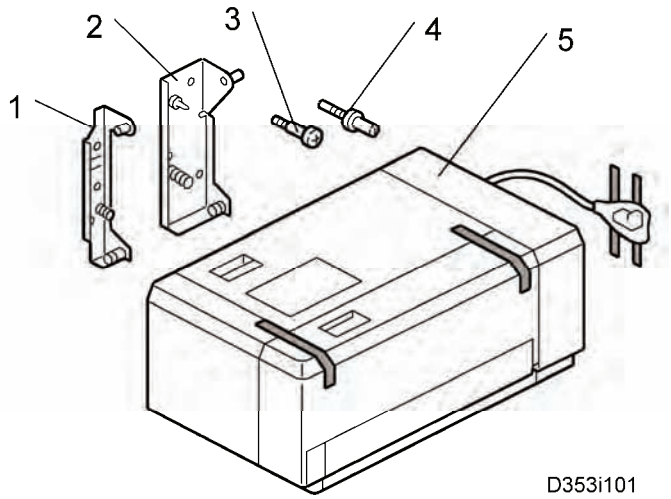

WWW.SERVICE-MANUAL.NET

2.7.2 INSTALLATION PROCEDURE

CAUTION

- Unplug the main machine power cord before starting the following procedure.

Note

- The Paper Tray Unit (D537) or LCT 2000-sheet (D538) must be installed before installing this 1200-sheet LCT.

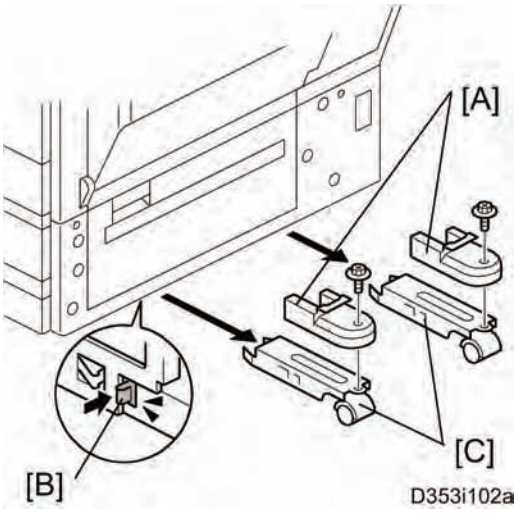

1. Unpack the LCT and remove the tapes.
2. Remove the stand covers [A].
3. Release the locks [B] of the front and rear caster stands.
4. Remove the caster stands [C].

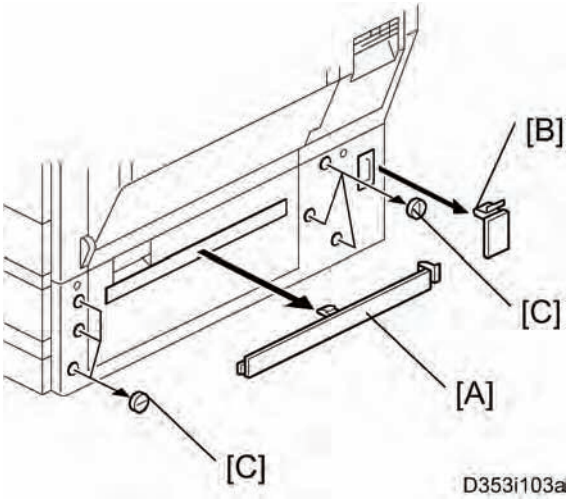

5. Remove the paper path cover [A], connector cover [B] and six hole covers [C].

WWW.SERVICE-MANUAL.NET

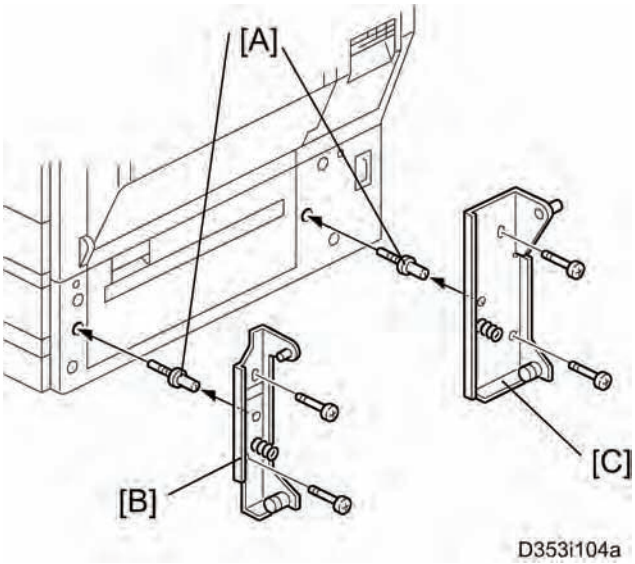

6. Insert the joint pins [A].
7. Attach the front [B] and rear brackets [C] (x 2 each).

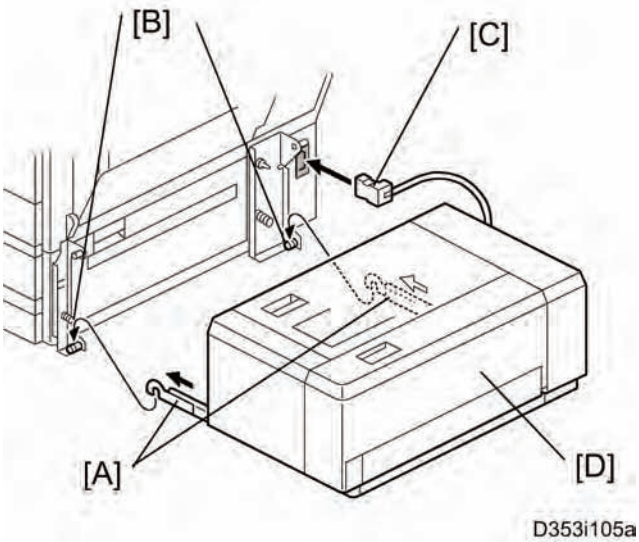

8. Pull out the front and rear rails [A], and then hang them on each bracket [B].
9. Connect the LCT cable [C] to the main machine.
10. Slide the LCT [D] into the main machine.
11. Make sure that the front and rear sides of the LCT are closely attached to the main machine.

WWW.SERVICE-MANUAL.NET

2.7.3 SIDE FENCE POSITION CHANGE

1. Open the right door of the LCT.
2. Push the down switch to lower the tray bottom plate until it reaches its lowest position.

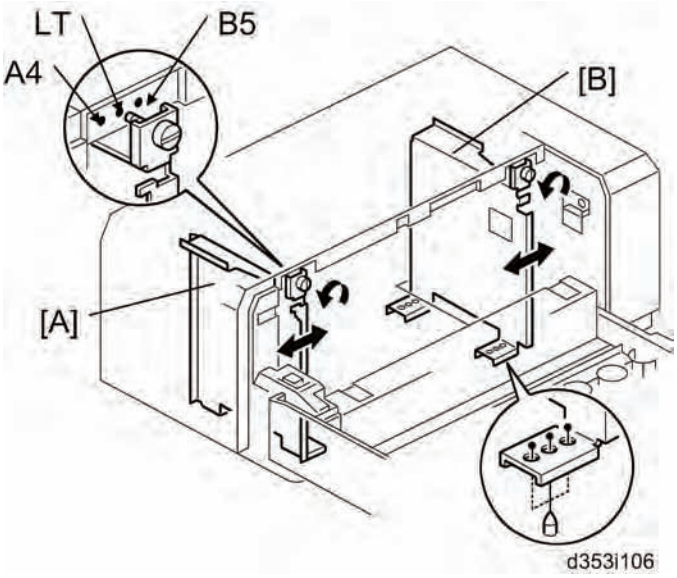

3. Remove the front and rear side fences [A, B] (x 1 each).
4. Install the side fences in the correct position (A4 LEF/ LT LEF/ B5 LEF).

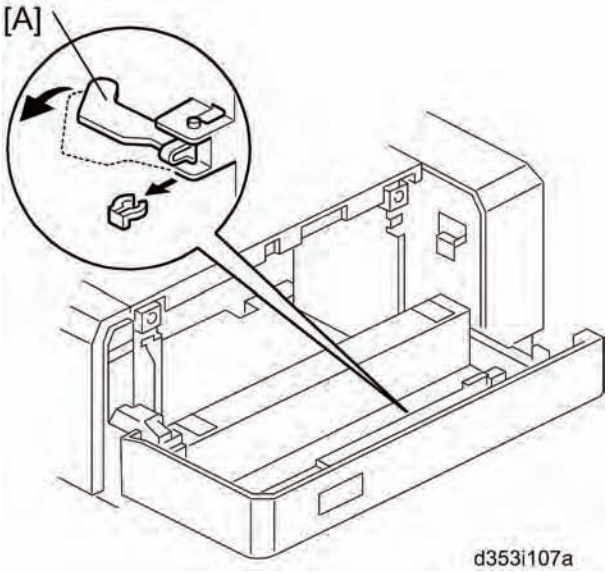

5. Pull the end fence [A] for B5 size paper as shown (x 1) if the side fences are adjusted for B5 size paper.
6. Close the right door.
7. Turn on the main power switch, and then go into the SP mode.
8. Input the correct paper size for the1200-sheet LCT with SP5181-018.

WWW.SERVICE-MANUAL.NET

2.8 ARDF DF3040 (D540)

2.8.1 COMPONENT CHECK

Check the quantity and condition of the components against the following list.

No.	Description	Q'ty
1	ARDF	1
2	Decal	1
3	Stamp	1
4	Knob Screw	2
5	Stud Screw	2
6	Platen Plate	1

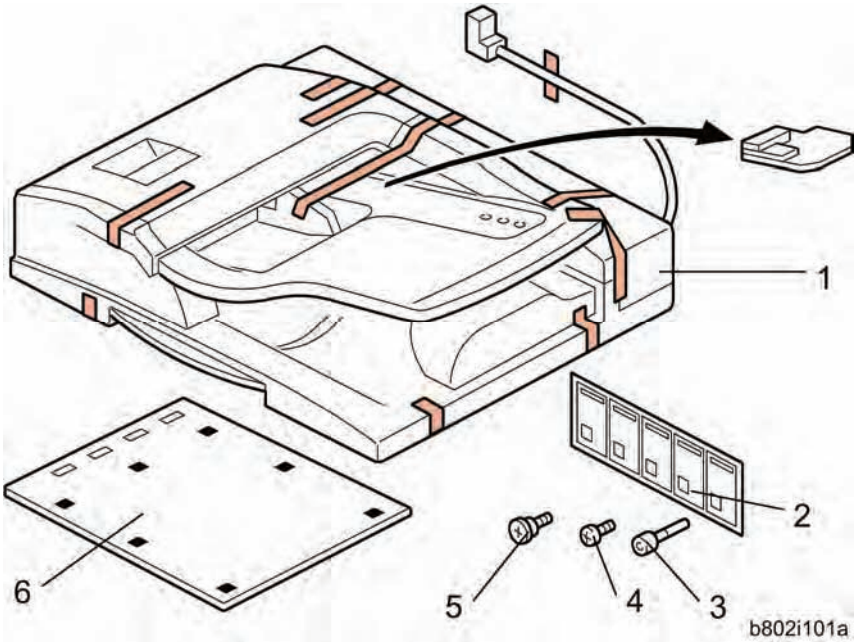

WWW.SERVICE-MANUAL.NET

2.8.2 INSTALLATION PROCEDURE

CAUTION

- **Unplug the copier power cord before starting the following procedure.**

1. Remove all tapes and shipping retainers.
2. Remove the two screws already installed at the top rear of the machine.

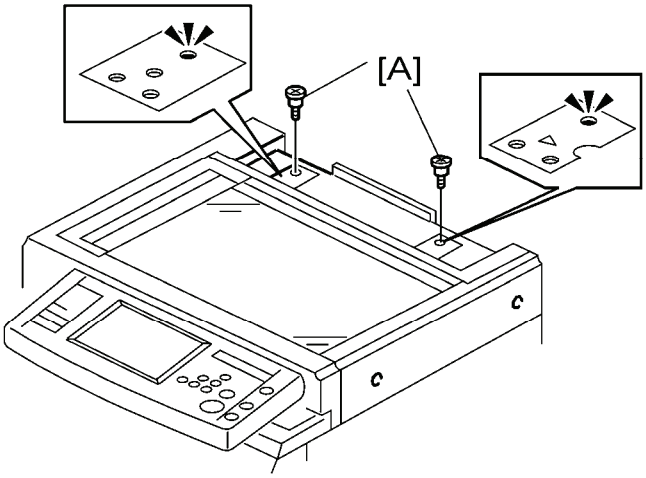

3. Insert the two stud screws [A] on the top of the machine.

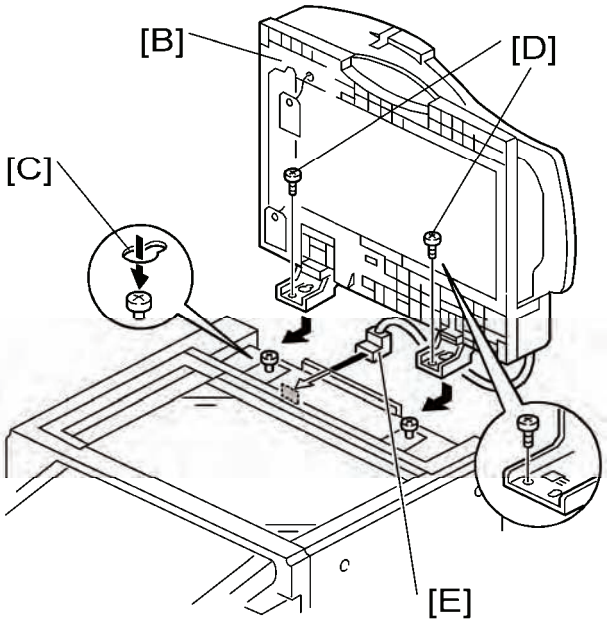

4. Mount the ARDF [B] by aligning the screw keyholes [C] in the ARDF support plate over the stud screws.
5. Slide the ARDF toward the front of the machine.
6. Secure the ARDF with the two knob screws [D].
7. Connect the ARDF interface cable [E] to the machine.

WWW.SERVICE-MANUAL.NET

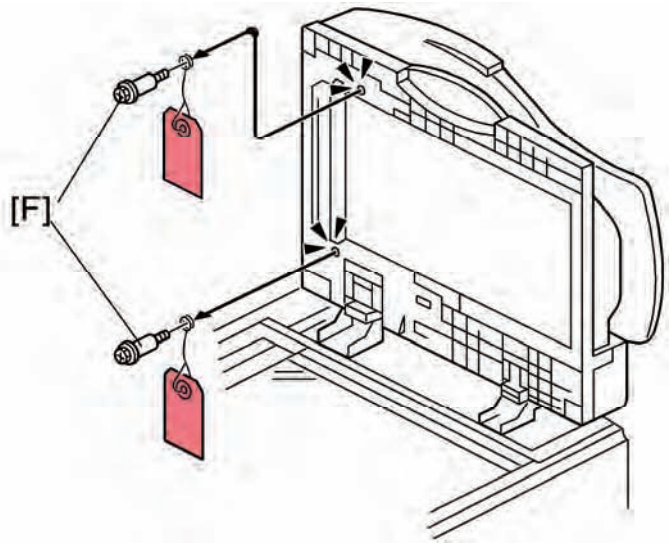

1. Remove two screws [F] from the bottom of the ARDF.

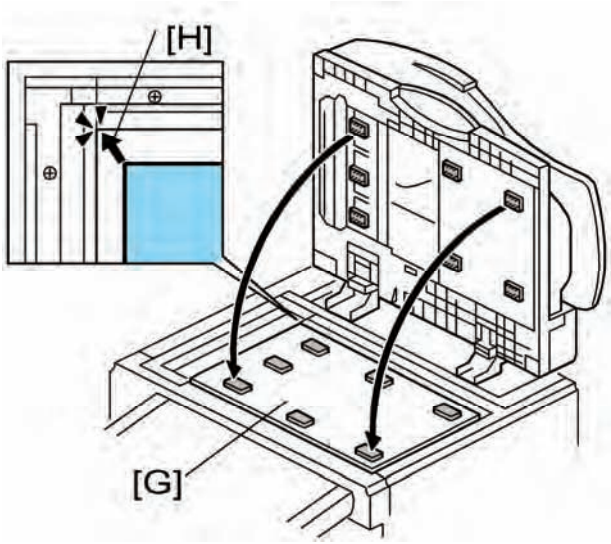

2. Peel off the platen plate [G] and place it on the exposure glass.
3. Align the rear left corner of the platen plate with the corner [H] on the exposure glass.
4. Close the ARDF.
5. Open the ARDF and check that the platen plate is correctly attached.

WWW.SERVICE-MANUAL.NET

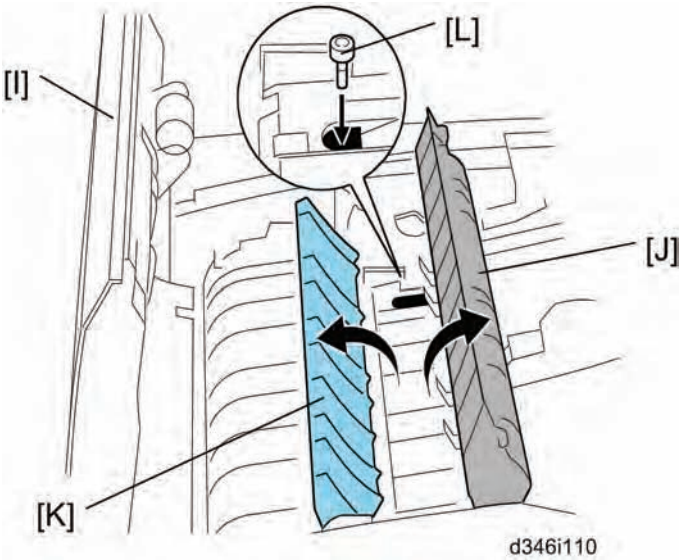

6. Open the ARDF cover [I].
7. Open the feed-in guide plate [J] and feed-out guide plate [K].
8. Install the stamp [L] into the ARDF.
9. Close two guide plates [J] [K].
10. Close the ARDF cover [I].

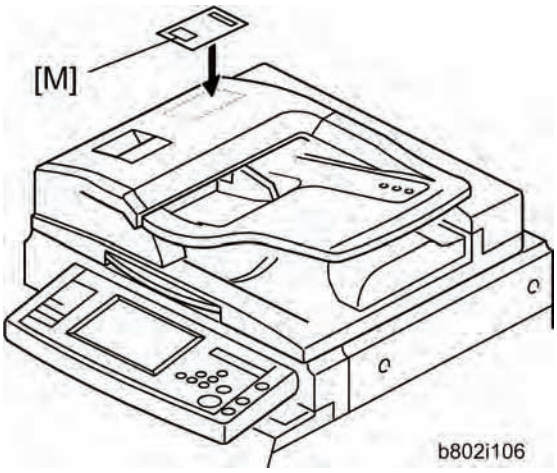

11. Attach the decal [M] to the top cover as shown. Choose the language you want.
12. Plug in and turn on the main power switch of the machine, and then check the ARDF operation.
13. Make a full size copy. Check that the registrations (side-to-side and leading edge) and image skew are correct. If they are not, adjust the registrations and image skew (refer to "Copy Adjustments" in the "Replacements and Adjustments" section).

WWW.SERVICE-MANUAL.NET

2.9 1 BIN TRAY BN3080 (D536)

2.9.1 COMPONENT CHECK

Check the quantity and condition of the components against the following list.

No.	Description	Q'ty
1	1 Bin Tray Unit	1
2	End-fence	1
3	Tray Support Bar	1
4	Screws (M3 x 16)	2
5	Tray	1

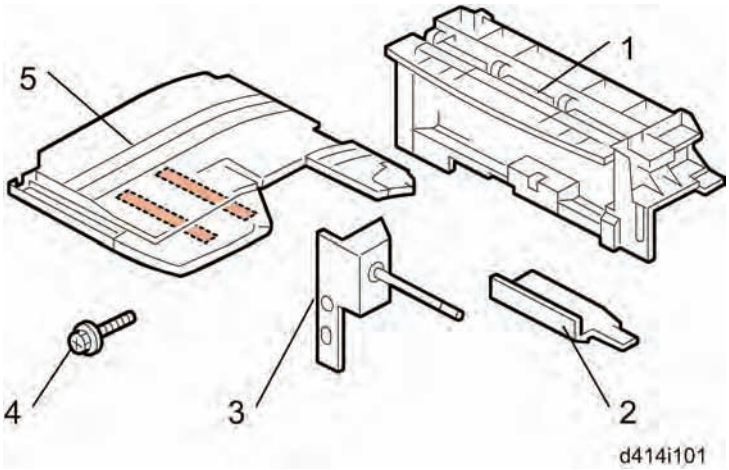

WWW.SERVICE-MANUAL.NET

2.9.2 INSTALLATION PROCEDURE

CAUTION

- **Unplug the copier power cord before starting the following procedure.**

If the bridge unit (D386) or side tray (D542) has already been installed in the machine, remove it before installing 1 bin tray unit (D536). This will make it easier for you to do the following procedure.

1. Remove all tapes.
2. Open the right door of the machine.

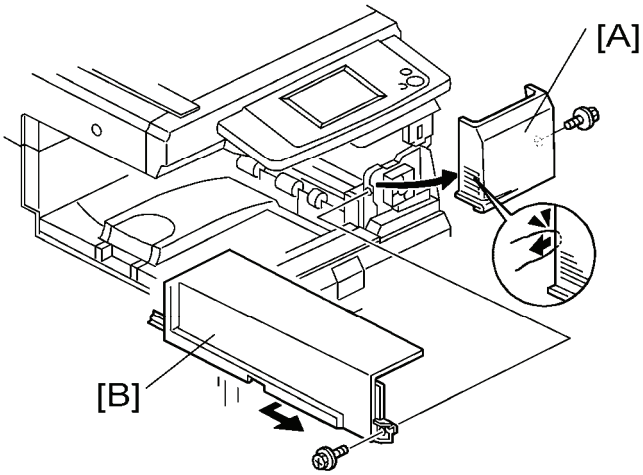

3. Remove the front right cover [A] (x 1).
4. Remove the inner cover [B] (x 1).

Note

- Keep this screw for step 5.

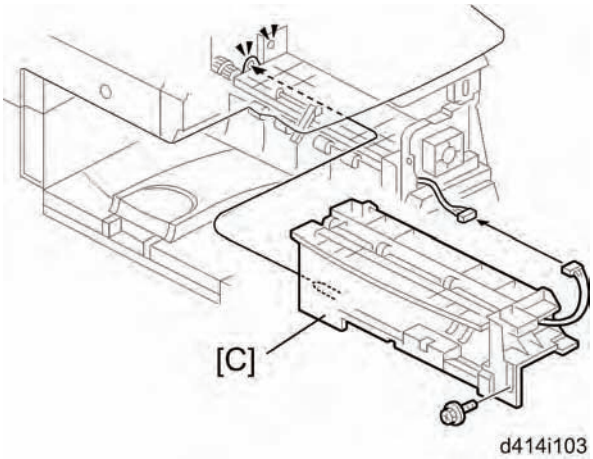

5. Install the 1 bin tray unit [C] (x 1, x 1, x 1 [This screw was removed in step 4]).

WWW.SERVICE-MANUAL.NET

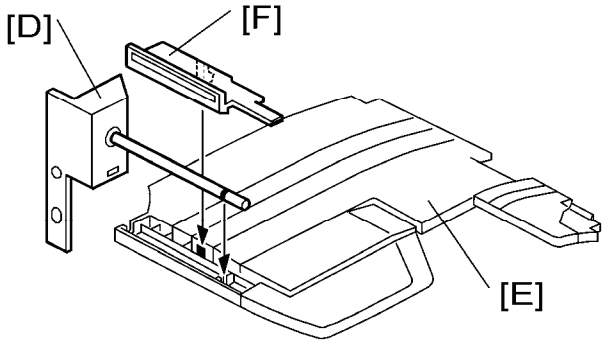

6. Attach the tray support bar [D] to the tray [E] as shown, and then attach the end-fence [F].

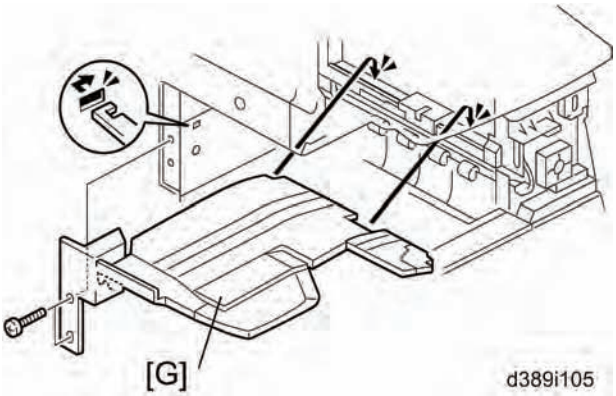

7. Install the tray [G] (with the tray support bar) in the machine (M3 x 16: x 2).
8. Reinstall the front right cover in the machine, and then close the right door of the machine.
9. Turn on the main power switch of the machine.
10. Check the 1 bin tray unit operation.

WWW.SERVICE-MANUAL.NET

2.10 INTERNAL SHIFT TRAY SH3040 (D388)

2.10.1 COMPONENT CHECK

Check the quantity and condition of the components against the following list.

No.	Description	Q'ty
1	Shift Tray Unit	1
2	Paper Guide - Small	2
3	Connector Cover	1

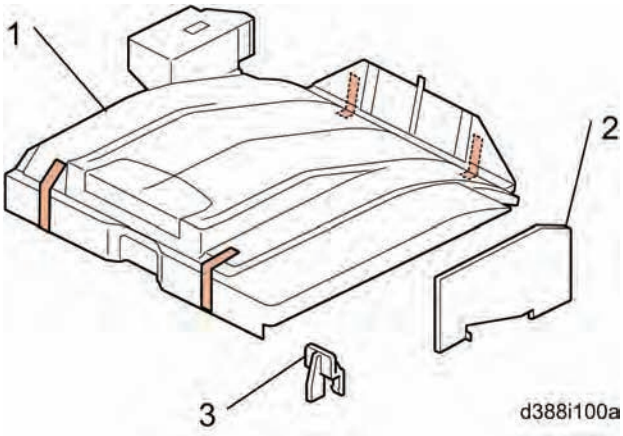

WWW.SERVICE-MANUAL.NET

2.10.2 INSTALLATION PROCEDURE

CAUTION

- Unplug the copier power cord before starting the following procedure.

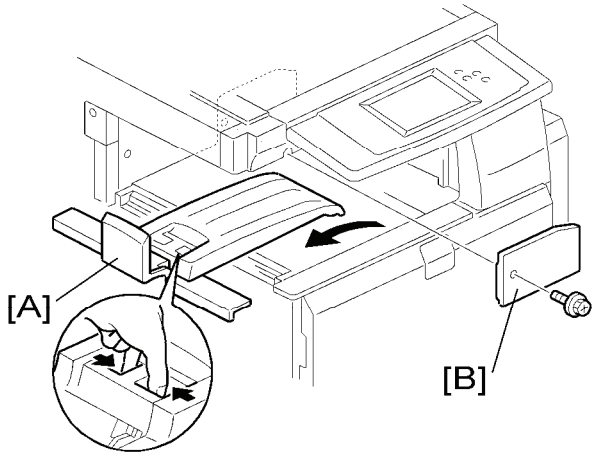

1. Remove all tapes.
2. Remove the standard tray [A].
3. Remove the inner cover [B] (x 1).

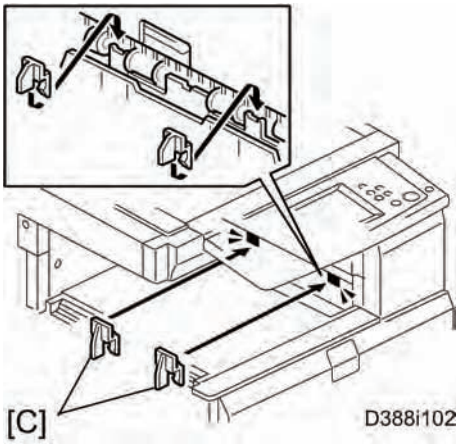

4. Install the small paper guides [C].

WWW.SERVICE-MANUAL.NET

5.

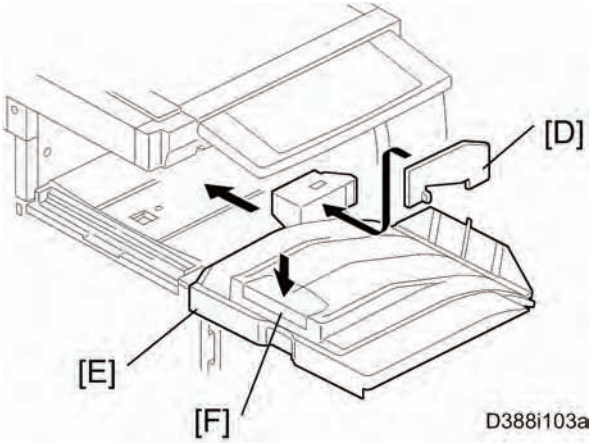

6. Attach the connector cover [D] to the shift tray unit [E].
7. Install the shift tray unit [E] to the machine.
8. Push down the left edge [F] of the shift tray.
9. Turn on the main power switch of the machine.
10. Check the shift tray unit operation.

WWW.SERVICE-MANUAL.NET

2.11 SIDE TRAY TYPE C5501 (D542)

2.11.1 COMPONENT CHECK

Check the quantity and condition of the accessories against the following list.

No.	Description	Q'ty
1	Side Tray Unit	1
2	Sub Output Tray	1
3	Main Output Tray	1
4	Screw	1
5	Knob screw	1
6	Frame Cover	1
7	Holder bracket	1

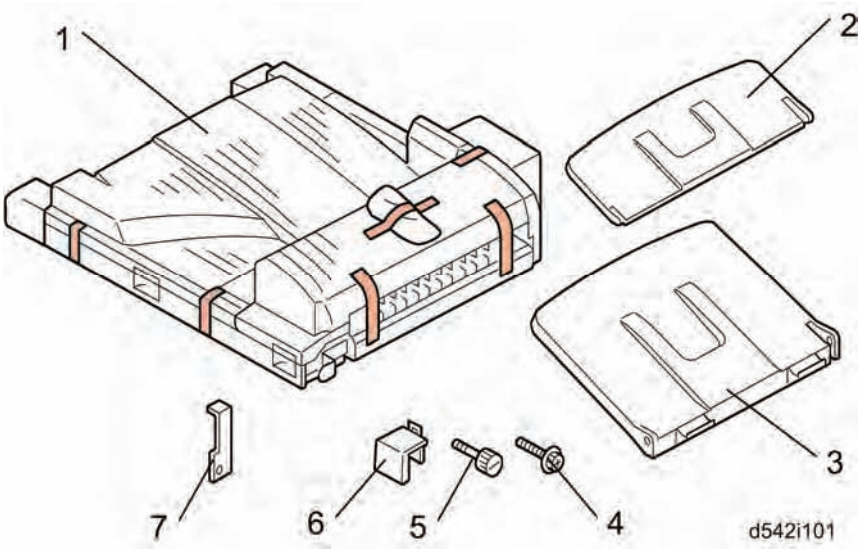

WWW.SERVICE-MANUAL.NET

2.11.2 INSTALLATION PROCEDURE

CAUTION

- Turn off the main switch of the copier and unplug the power cord before you start the installation procedure.

Note

- If you will install the 1-bin tray (D536) on the machine, install the 1-bin tray first before installing the side tray (D542). This makes it easier to do the following procedure.

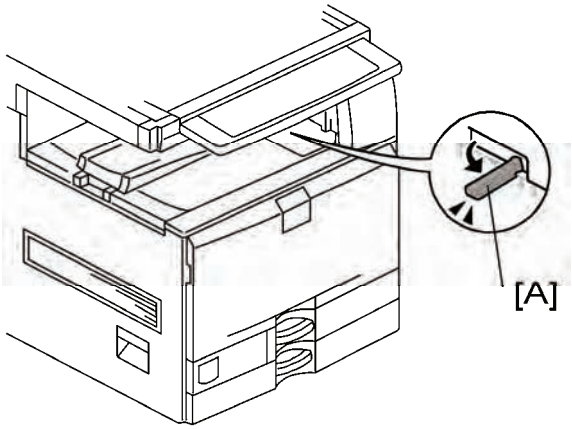

1. Remove all tapes.
2. If the sensor feeler [A] is out, fold it into the machine.
3. Open the right door of the machine.

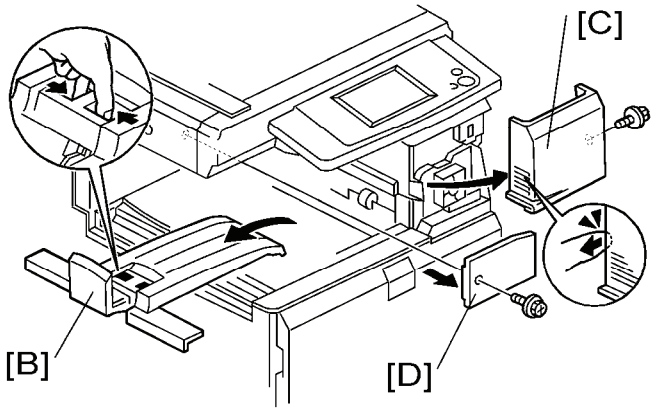

4. Remove the inner tray [B].
5. Remove the front right cover [C] (x 1).
6. Remove the connector cover [D] (x 1).

WWW.SERVICE-MANUAL.NET

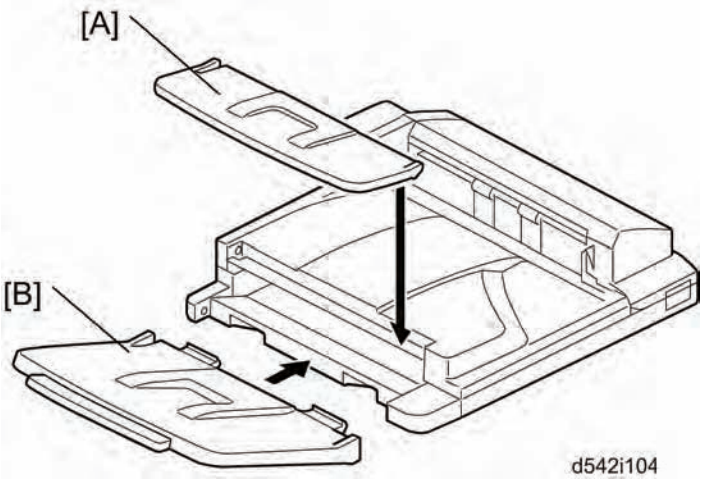

7. Attach the main output tray [A] and sub output tray [B] to the side tray unit.

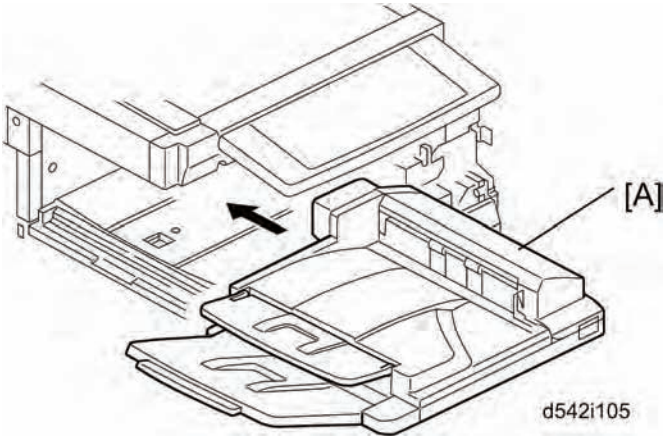

8. Install the side tray unit [A] in the machine.

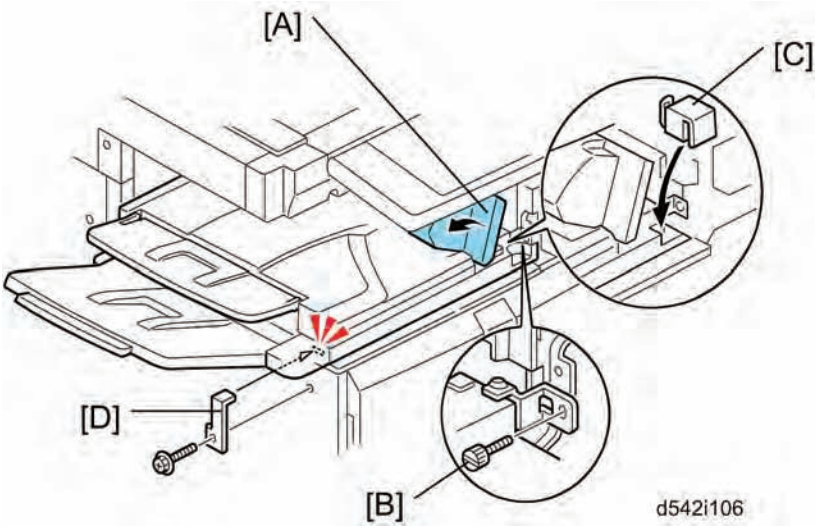

9. Open the side tray cover [A].
10. Secure the side tray unit with the knob screw [B].
11. Attach the frame cover [C].
12. Reinstall the front right cover to the machine, and then close the right door of the machine.

WWW.SERVICE-MANUAL.NET

Note

- Open the side tray cover [A] when installing the front right cover. Otherwise, you cannot reinstall it.

13. Install the holder bracket [D] (x 1)
14. Turn on the main power switch of the machine.
15. Check the side tray operation.

WWW.SERVICE-MANUAL.NET

2.12 BRIDGE UNIT BU3030 (D386)

2.12.1 COMPONENT CHECK

Check the quantity and condition of the components against the following list.

No.	Description	Q'ty
1	Bridge Unit	1
2	Frame Cover	1
3	Knob screw	1
4	Long knob screw	1
5	Holder bracket	1
6	Guide	2

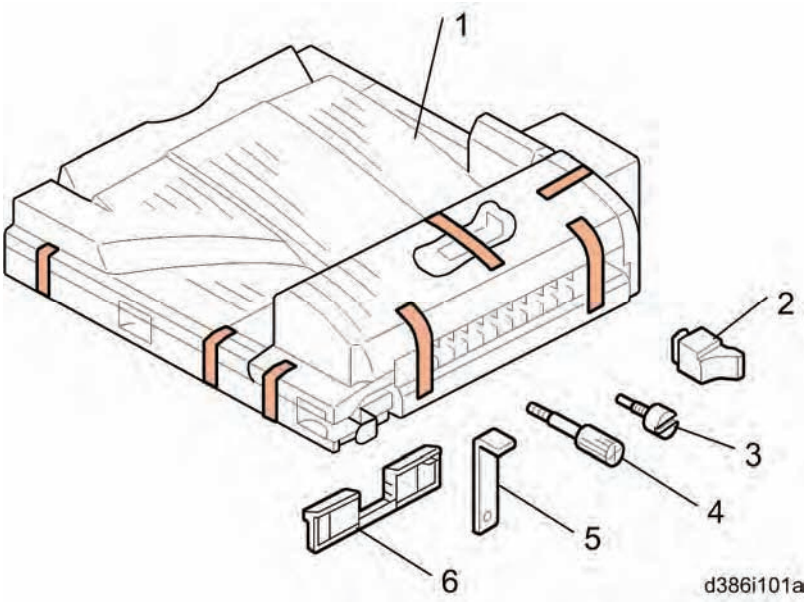

WWW.SERVICE-MANUAL.NET

2.12.2 INSTALLATION PROCEDURE

CAUTION

- Unplug the copier power cord before starting the following procedure.

Note

- 1. If you will install the 1-bin tray (D536) in the machine, install the 1-bin tray before you install the bridge unit (D386). This will make it easier for you to do the following procedure.
- 2. If you will install a finisher (B408, B804 or B805) in the machine, install the finisher after you install the bridge unit (D386).

1. Remove all tapes.

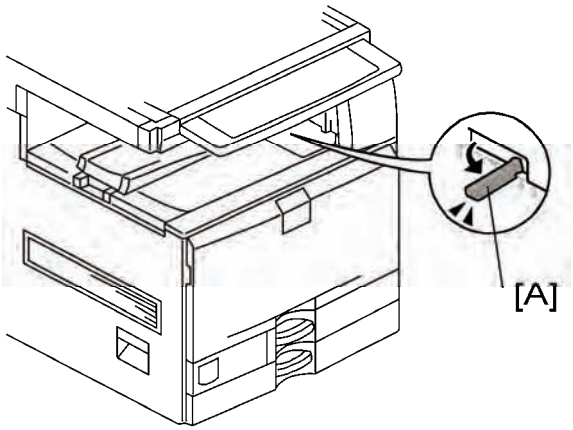

2. If the sensor feeler [A] is out, fold it into the machine.
3. Open the right door of the machine.

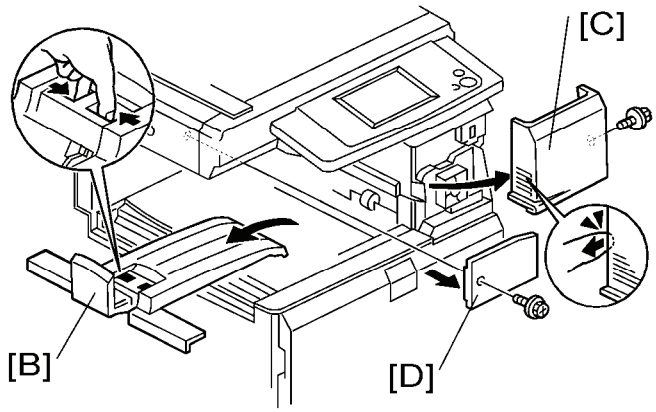

4. Remove the inner tray [B].
5. Remove the front right cover [C] (x 1).
6. Remove the connector cover [D] (x 1).

WWW.SERVICE-MANUAL.NET

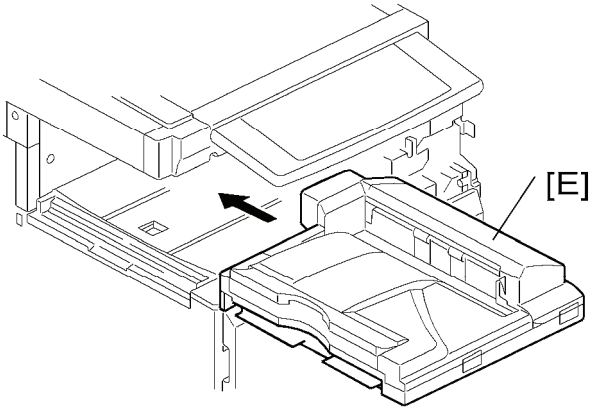

7. Install the bridge unit [E] in the machine.

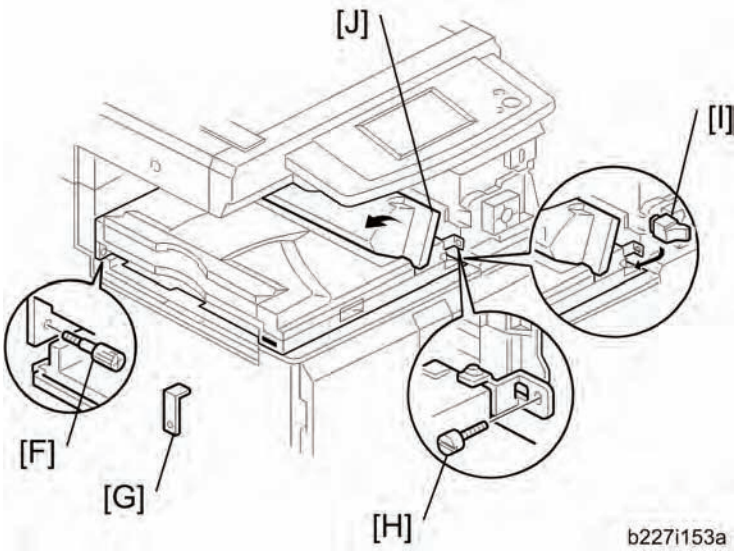

8. Secure the bridge unit with the knob screw [F] and screw [H].
9. Attach the frame cover [I].
10. Reinstall the front right cover in the machine. Then close the right door of the machine.

Note

- Open the bridge unit cover [J] when installing the front right cover. Otherwise, the bridge unit cover is an obstacle for attaching the front right cover.

11. Install the optional finisher (refer to the finisher installation procedure).

Note

- If you will not install the finisher at this time, install the holder bracket [G]. Otherwise, the customer will damage the bridge unit if they pull up the bridge unit tray. When you install the finisher, you will need this bracket during the installation procedure.

WWW.SERVICE-MANUAL.NET

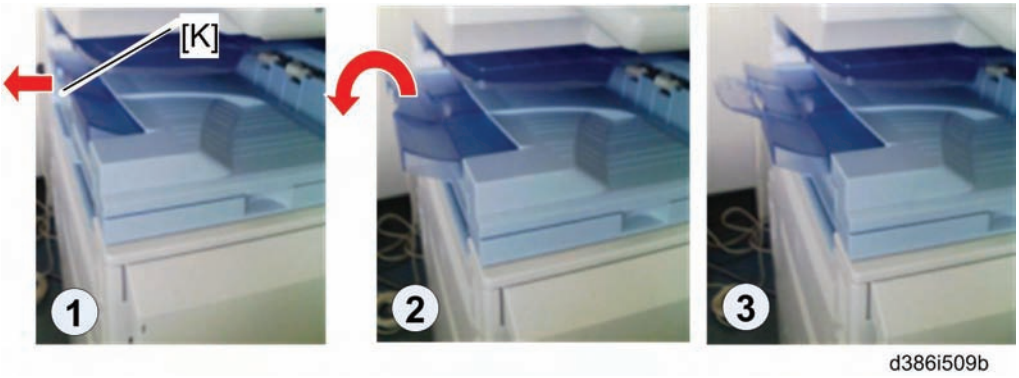

12. Pull the extension tray [K] only if the 1000-sheet finisher (B408) is to be installed in the main machine.
13. Turn on the main power switch of the machine.
14. Check the bridge unit operation.

WWW.SERVICE-MANUAL.NET

2.13 SR790 (B408)

2.13.1 ACCESSORY CHECK

Check the quantity and condition of the accessories against the following list.

No.	Description	Q'ty
1	Front Joint Bracket	1
2	Rear Joint Bracket (Not used)	1
3	Rear Joint Bracket	1
4	Grounding Plate	1
5	Copy Tray	1
6	Staple Position Decal	1
7	Screw - M4 x 14	4
8	Knob Screw - M4 x 10	1
9	Screw - M3 x 8	1
10	Knob Screw - M3 x 8	1

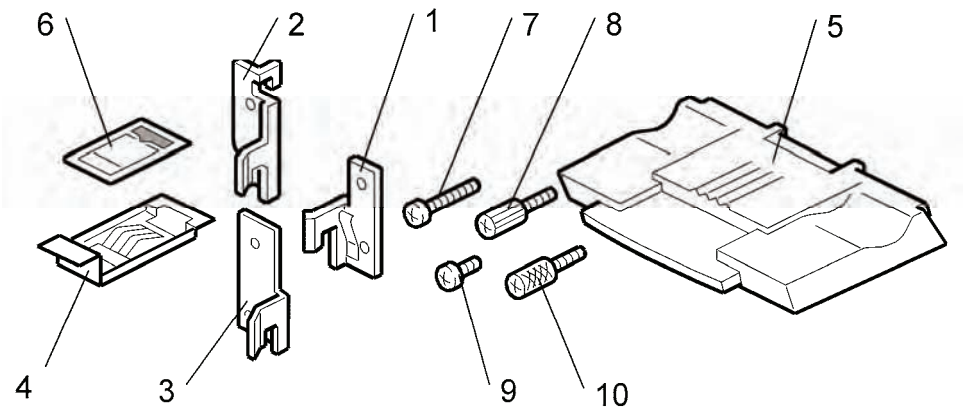

WWW.SERVICE-MANUAL.NET

2.13.2 INSTALLATION PROCEDURE

CAUTION

- Unplug the main machine power cord before starting the following procedure.

If this finisher will be installed on the D088 or D089 copier, the following options must be installed before installing this finisher.

- Bridge Unit (D386)
- Paper Feed Unit (D537) or LCT (D538)

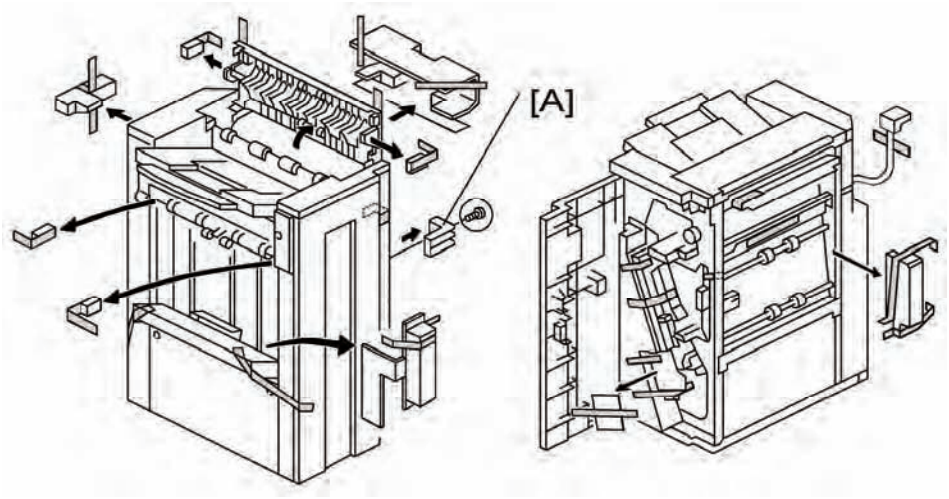

1. Unpack the finisher, and then remove the stopper [A] and tapes (x 1).

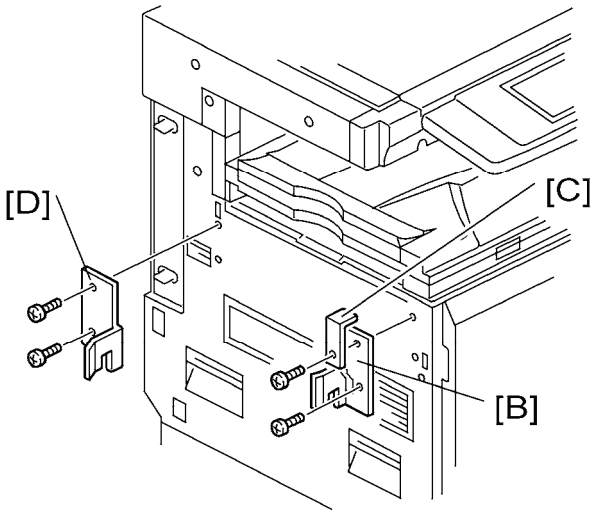

2. Install the front joint bracket [B], holder bracket [C] (x 2 - M4 x 14), and rear joint bracket [D] (x 2 - M4 x 14).

Note

- The holder bracket [C] must be placed outside the front joint bracket [B]. The holder bracket is provided with the bridge unit (D386).

WWW.SERVICE-MANUAL.NET

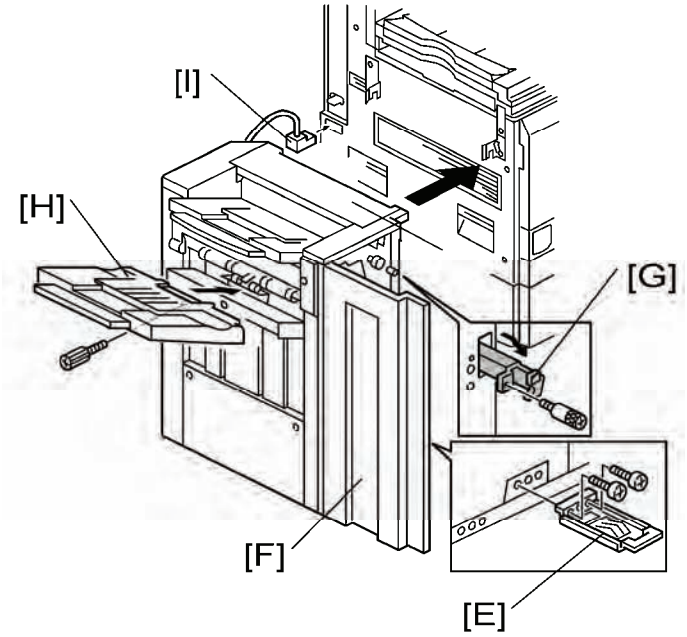

1. Install the grounding plate [E] on the finisher (x 2 - M3 x 8).

   Note

   - Use the screw removed in step 1 and the screw from the accessory box.
2. Open the front door [F] of the finisher, and then pull the locking lever [G] (1 knob screw - M3 x 8).
3. Align the finisher on the joint brackets, and lock it in place by pushing the locking lever.
4. Secure the locking lever (1 knob screw - M3 x 8).
5. Close the front door.
6. Install the copy tray [H] (1 knob screw - M4 x 10).
7. Connect the finisher cable [I] to the main machine below the right rear handle.

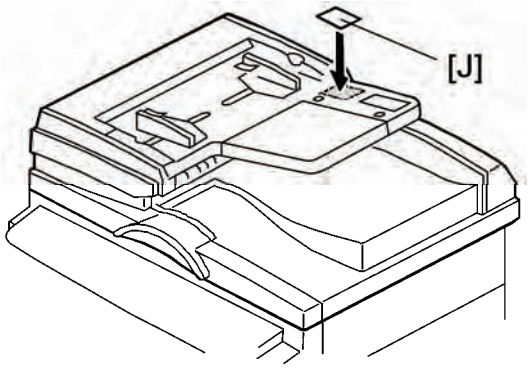

8. Attach the staple position decal [J] to the ARDF as shown.
9. Turn on the main power switch and check the finisher operation.

WWW.SERVICE-MANUAL.NET

2.14 FINISHER SR3020/SR3030 (B804/B805)

2.14.1 ACCESSORY CHECK

Check the quantity and condition of the accessories against the following list.

No.	Description	Q'ty
1	Rear Joint Bracket	1
2	Front Joint Bracket	1
3	Ground Plate	1
4	Tapping screws - M4 x14	4
5	Tapping screws - M3 x 8	1
6	Tapping screws - M3 x 6	6
7	Upper output tray	1
8	Support Tray	1
9	Lower output tray (B804 Only)	1
10	Cushion (with double-sided tape)	1

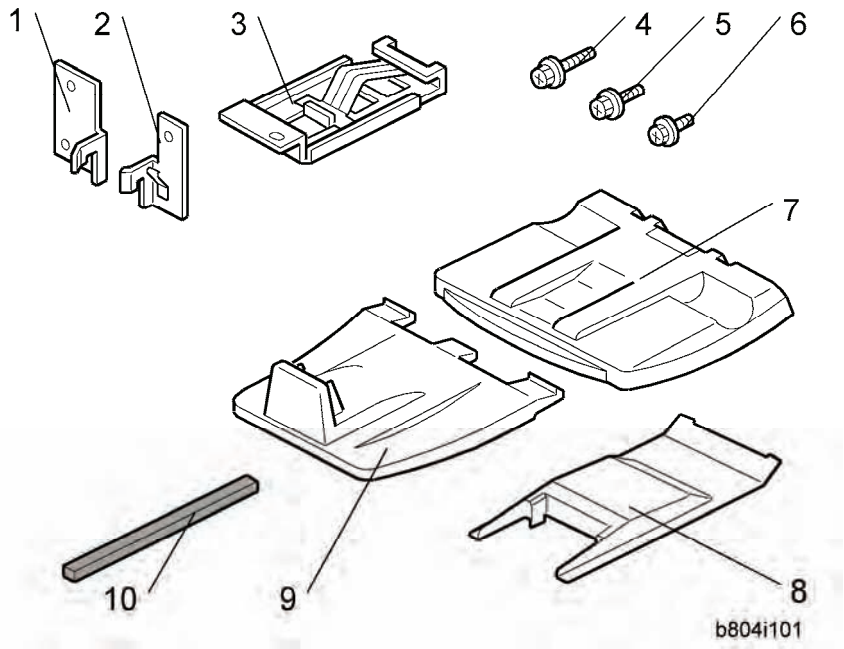

WWW.SERVICE-MANUAL.NET

2.14.2 INSTALLATION PROCEDURE

⚠CAUTION

- Unplug the main machine power cord before starting the following procedure.

The bridge unit (D386) and optional paper feed unit (D537) or LCT (D538) must be installed before installing this finisher (B804/B805).

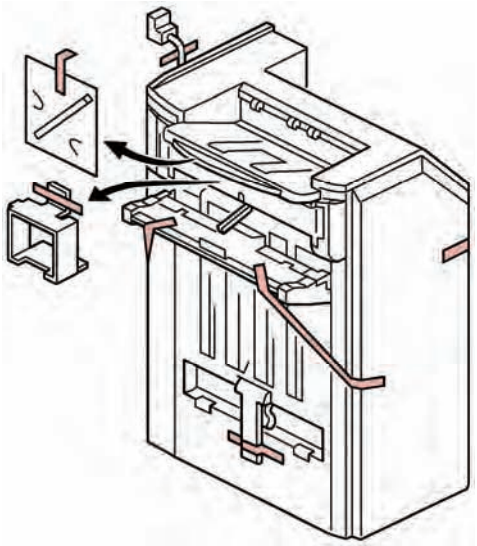

1. Unpack the finisher and remove all tapes and packing materials from the finisher.

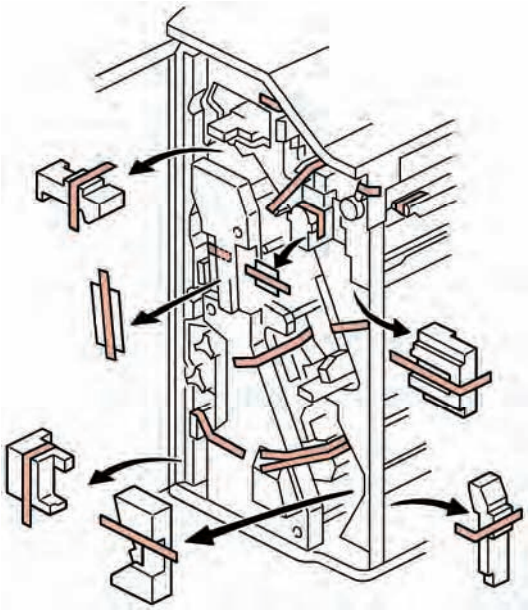

2. Open the front door, and then remove all tapes and packing materials from the inside of the finisher.

WWW.SERVICE-MANUAL.NET

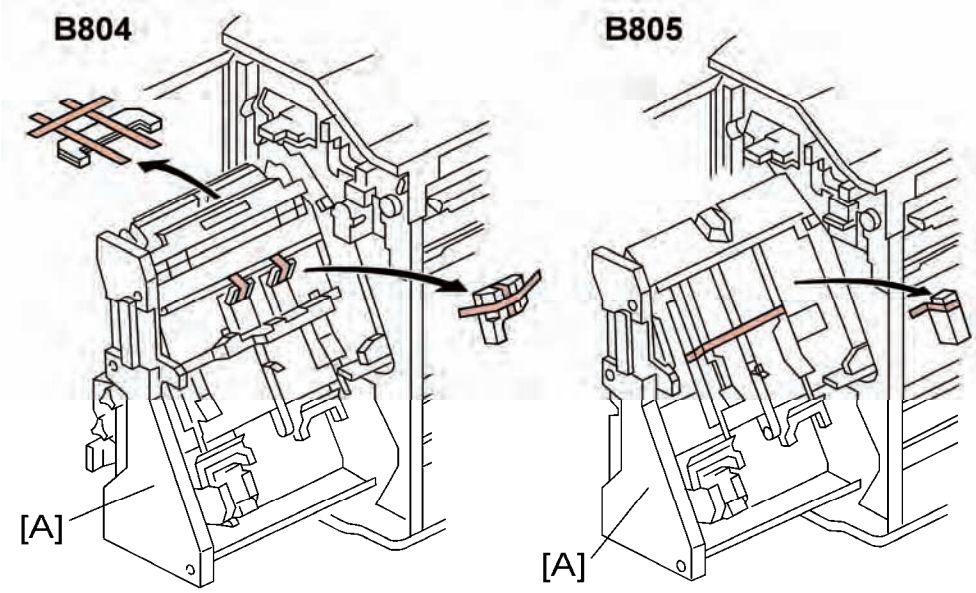

3. Pull out the jogger unit [A], and then remove all tapes and retainers.

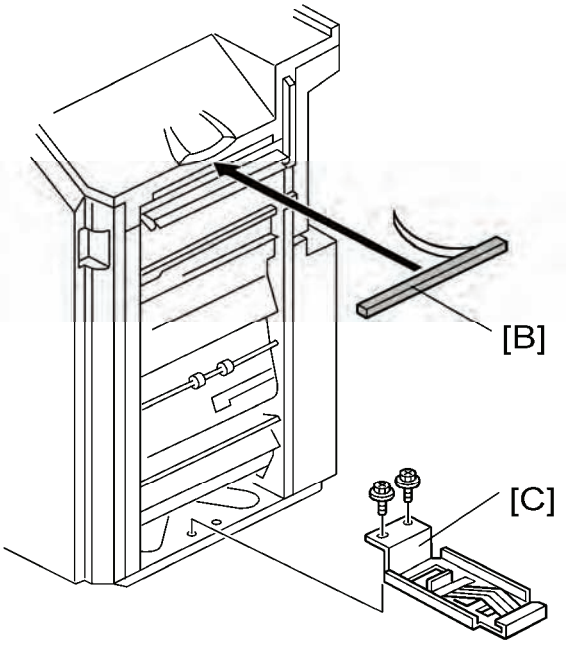

1. Attach the cushions [B] to the finisher.

Note

- Make sure that the cushion is placed within 0 to 1 mm from the edge of the cover.

2. Install the ground plate [C] on the finisher (x 2; M3x6).

WWW.SERVICE-MANUAL.NET

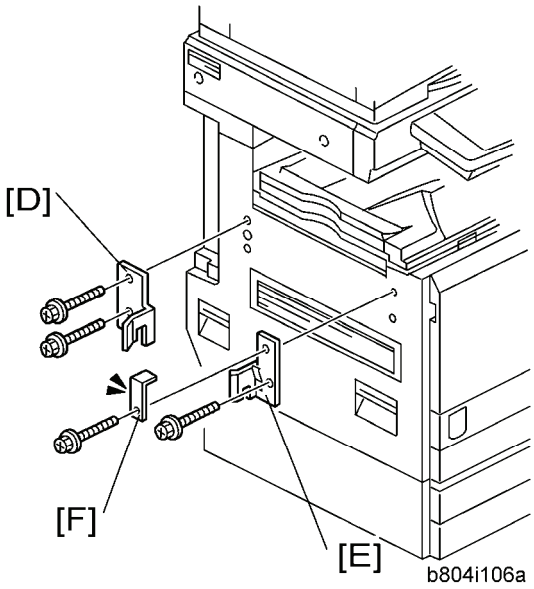

3. Attach the rear joint bracket [D] (x 2; M4x4).
4. Attach the front joint bracket [E] and the holder bracket [F] (x 2; M4x14).

Note

- The holder bracket [F] must be placed outside the front joint bracket [E]. The holder bracket is provided with the bridge unit (D386).

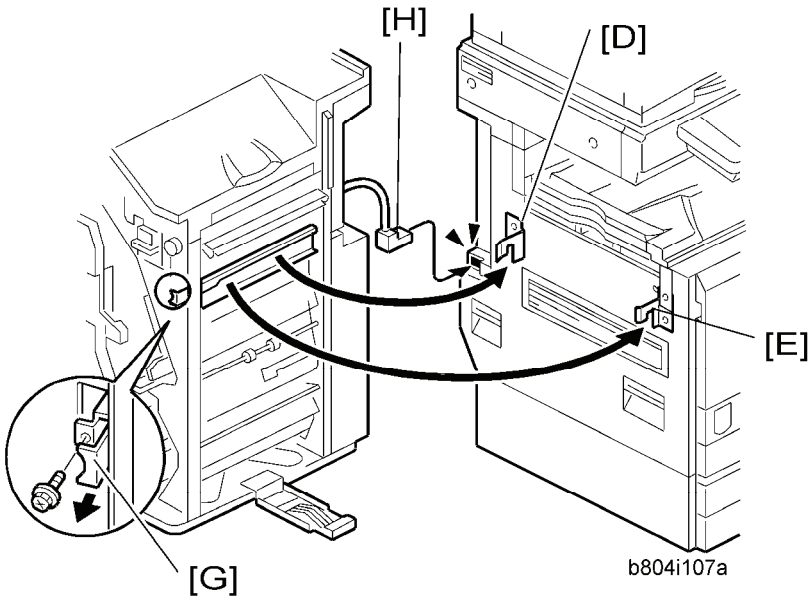

5. Pull the lock lever [G] (Long knob screw x 1).
6. Slowly push the finisher to the left side of the machine, keeping its front door open until the brackets [D] [E] go into their slots.
7. Push the lock lever [G], and then secure it (Long knob screw x 1).
8. Close the front door of the finisher.
9. Connect the finisher connector [H] to the machine.

WWW.SERVICE-MANUAL.NET

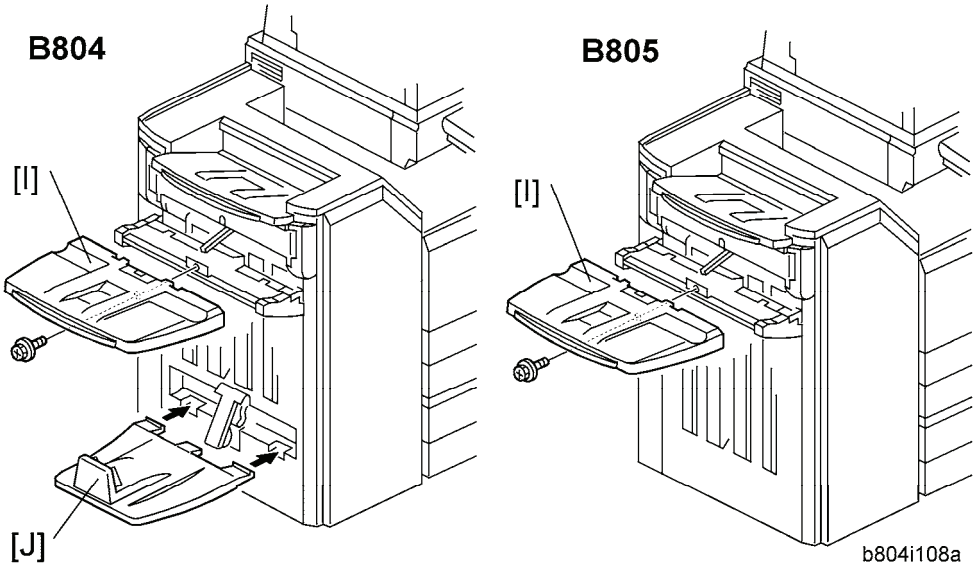

10. Install the upper output tray [I] (x 1; M3x8).
11. Only for B804, install the lower output tray [J].
12. Turn on the main power switch of the machine.
13. Check the finisher operation.

Support Tray Installation

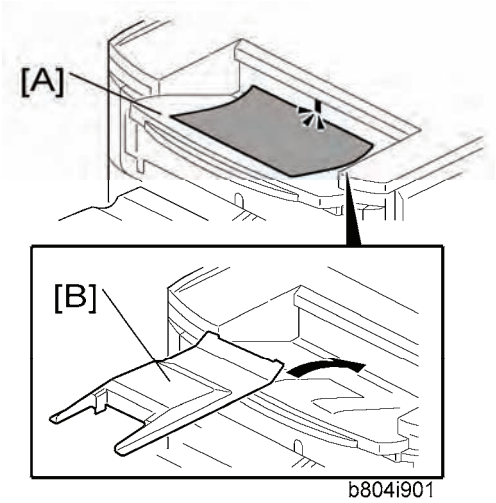

If a stacking problem occurs several times on the upper output tray [A], put the support tray [B] on the tray as shown.

Note

- Keep this tray in the manual pocket if this tray does not need to be installed.

WWW.SERVICE-MANUAL.NET

2.15 PUNCH UNIT TYPE 3260 (B702)

The Punch Unit B702 is installed in the 2000-Sheet Booklet (B804) Finisher/ 3000-Sheet Finisher (B805).

2.15.1 COMPONENT CHECK

Check the quantity and condition of the components against the following list.

No.	Description	Q'ty
1	Punchout Waste Unit	1
2	Slide Drive Unit	1
3	Punch Waste Hopper	1
4	Screws: M3 x 6	5
5	Side-to-Side Detection Unit	1
6	Punching Unit	1

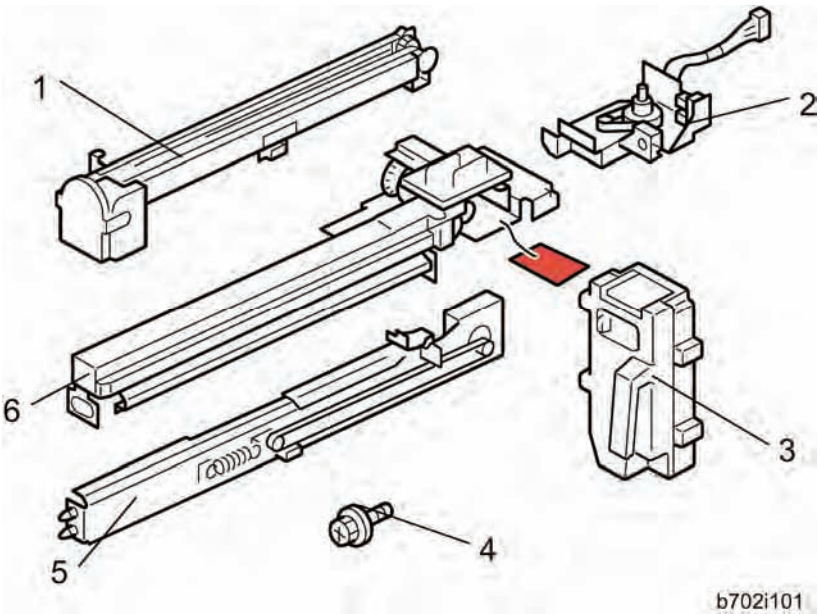

WWW.SERVICE-MANUAL.NET

2.15.2 INSTALLATION PROCEDURE

CAUTION

- Unplug the main machine power cord before starting the following procedure. If the 2000-sheet booklet/ 3000-sheet finisher has been installed, disconnect it and pull it away from the machine.

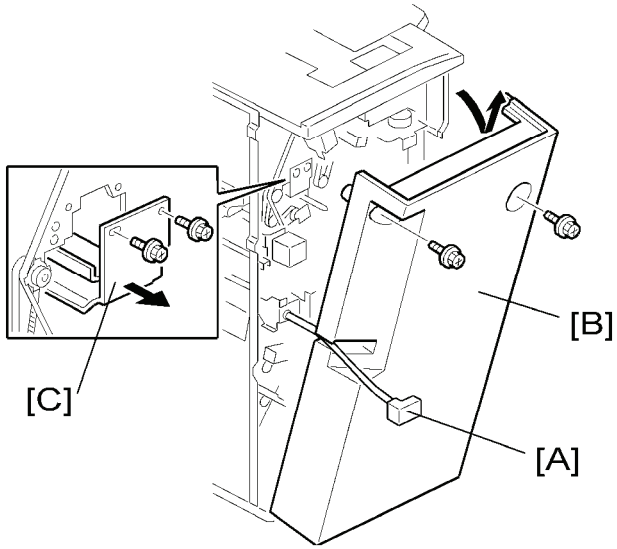

1. If the finisher is connected to the copier, disconnect the power connector [A] and move the finisher away from the copier.
2. Remove the rear cover [B] (x 2) and open the front door.

   Note

   - At the bottom of the rear cover, make sure to disconnect the tabs that attach the cover to the frame.
3. Remove the guide plate [C] (x 2).

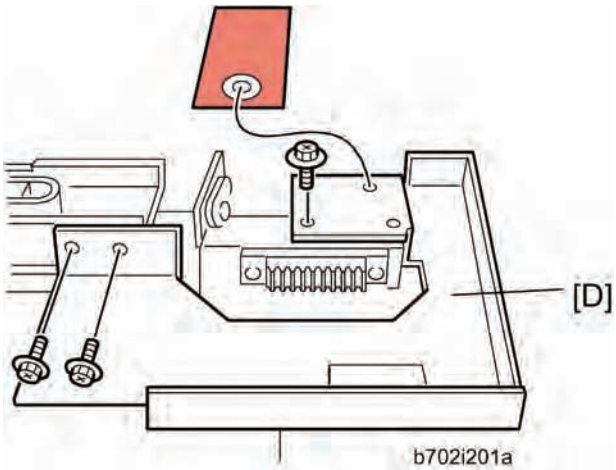

4. Remove the shipping retainer [D] (x 3).

WWW.SERVICE-MANUAL.NET

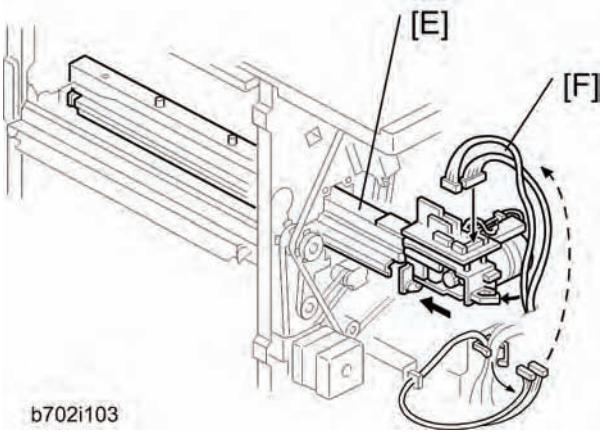

5. Move the punch unit [E] along its rails into the finisher. Make sure that the pin engages correctly at the front and rear.
6. Connect the cables [F] of the finisher to the connectors (CN601 and CN602) on the punch unit board (x 2, x 1).
   - The cables [F] are coiled and attached to the PCB.

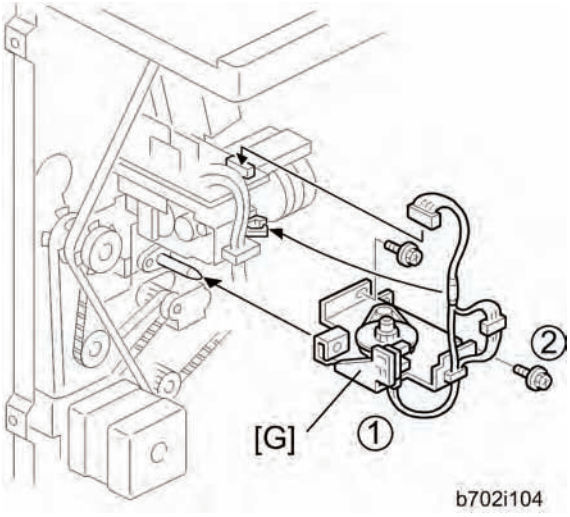

7. Attach the slide drive unit [G] to the finisher and connect it to the punch unit (x 2, x 1). Push in the slide drive unit at ① when you attach the screw ②.
8. Make sure that the punch unit moves freely and is not blocked by the screws.

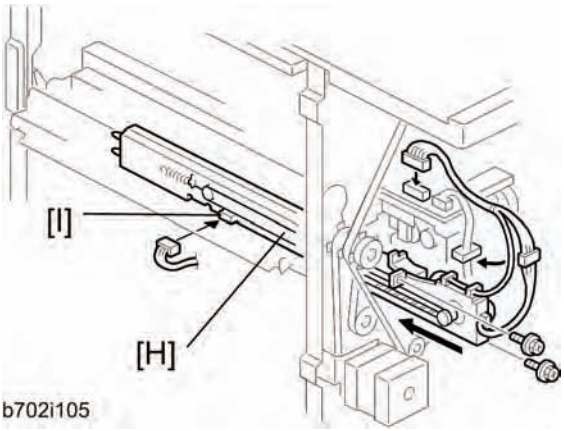

9. Put the side-to-side detection unit [H] in the machine. Make sure that the two pins are

WWW.SERVICE-MANUAL.NET

engaged correctly at the front.

10. Make sure that the side-to-side detection unit moves smoothly on its rails. If it does not, make sure that the rails are aligned with their grooves.
11. Attach the side-to-side detection unit and connect it at the rear (x 2, x 1, x 1).
12. Pull the short connector out of the connector [I] then connect the cable of the finisher (x 1).

Note

- This is the 3-pin connector.

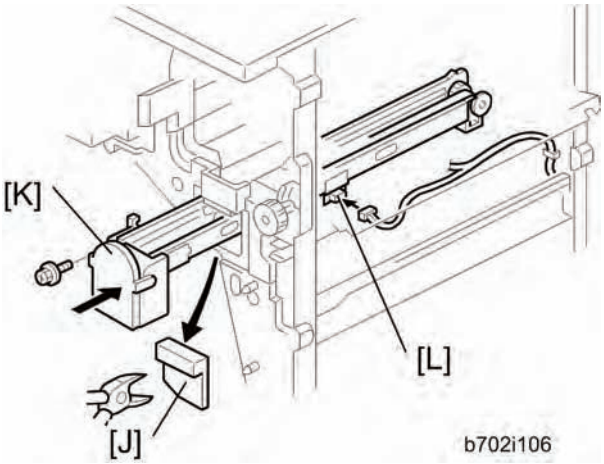

13. At the front, use a pair of wire cutters to remove the part [J] of the cover.
14. Install the punch-waste transport unit [K] in the finisher.
15. Make sure that the punch-waste transport unit moves smoothly on its rails. If it does not, make sure that the rails are aligned with the grooves.
16. Remove the short connector from the connector [L].

WWW.SERVICE-MANUAL.NET

Note

- This is the 4-pin connector.

17. Connect the cable and attach the punch-waste transport unit (x 1, x 1, x 1).

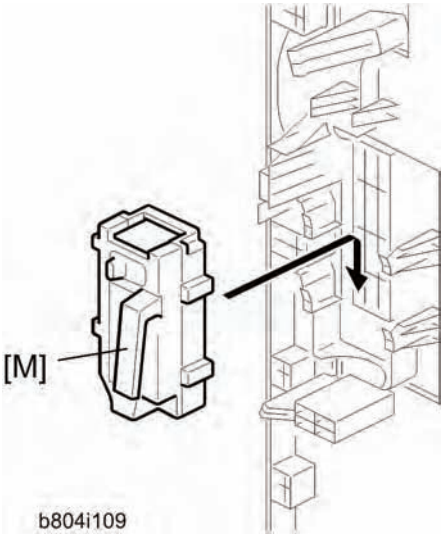

18. Set the hopper [M] in its holder.
19. Reassemble the finisher, and then install it on the main machine.
20. Connect the power cord to the outlet, and then turn the main power switch on.
21. Check the punch unit operation.

WWW.SERVICE-MANUAL.NET

2.16 KEY COUNTER BRACKET TYPE H (A674)

2.16.1 INSTALLATION PROCEDURE

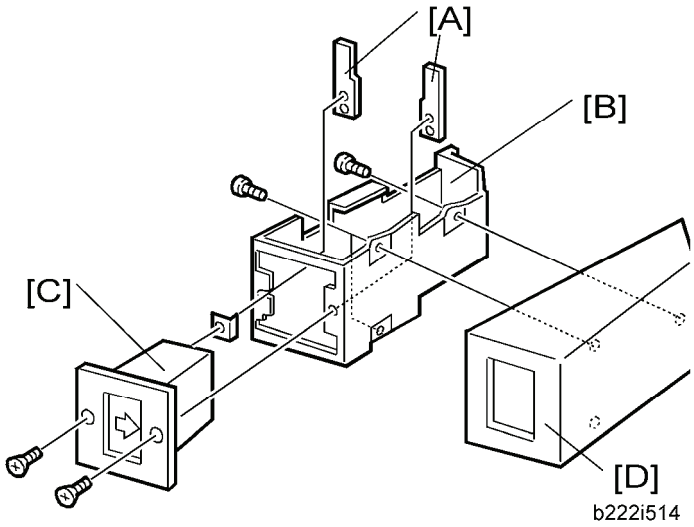

1. Hold the key counter plate nuts [A] on the inside of the key counter bracket [B] and insert the key counter holder [C].
2. Secure the key counter holder to the bracket (x 2).
3. Install the key counter cover [D] (x 2).
4. Rear cover (p.4-15)

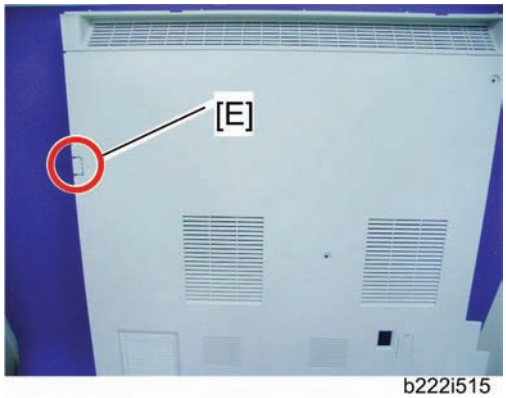

5. Cut off the part [E] of the rear cover.

WWW.SERVICE-MANUAL.NET

6. Connect the harness to the connector [F] inside the machine.

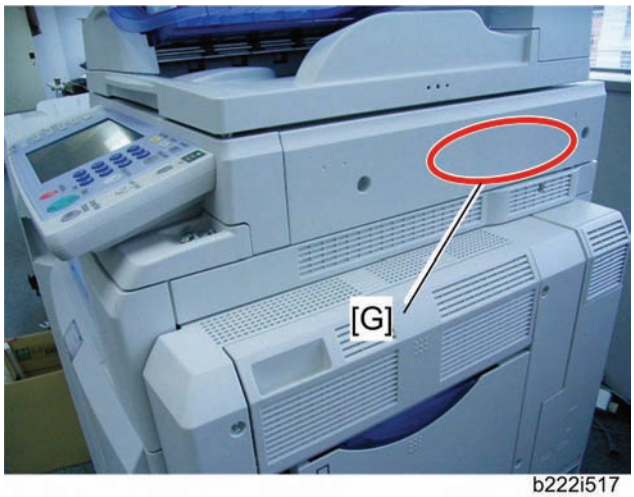

7. Peel off double sided tape on the key counter bracket and attach the key counter to the scanner right cover [G].
8. Reassemble the machine.

WWW.SERVICE-MANUAL.NET

2.17 OPTIONAL COUNTER INTERFACE UNIT TYPE A (B870)

2.17.1 INSTALLATION PROCEDURE

1. Rear cover (☛ p.4-15)
2. IOB bracket (☛ p.4-131 "Controller Box")

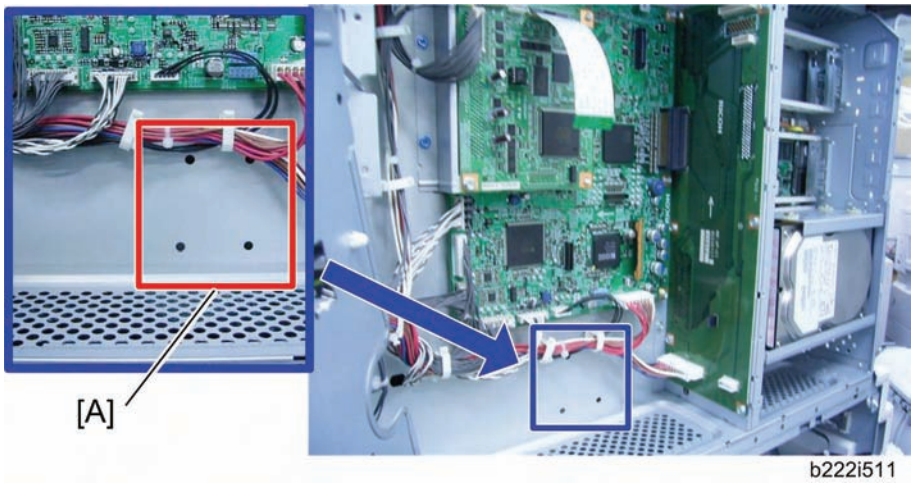

3. Install the four stud stays in the location [A] in the controller box.
4. Install the key counter interface board on the four stud stays in the controller box.
5. Connect the harness to CN3 on the key counter interface board.

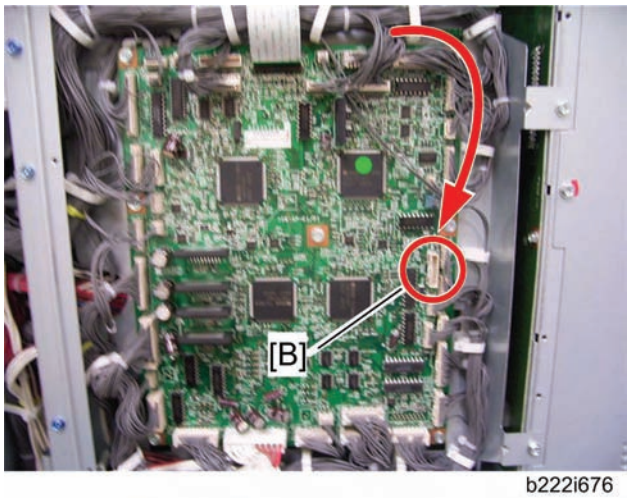

6. Close the IOB bracket and connect the other terminal to CN215 [B] on the IOB.

WWW.SERVICE-MANUAL.NET

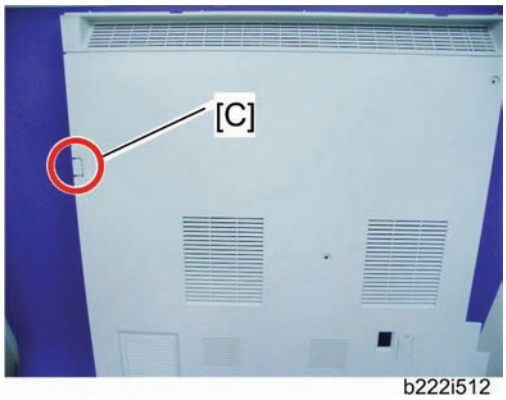

7. Cut off the part [C] of the rear cover.

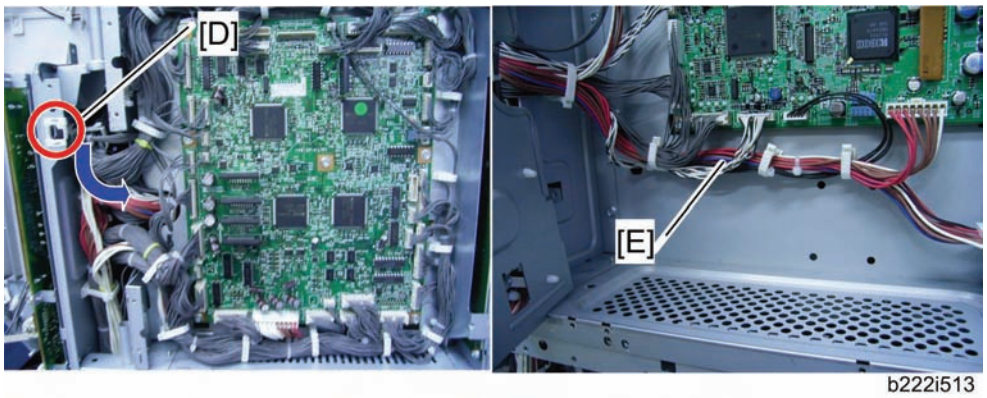

8. Clamp the harness from the counter device with the clamp [D] and put it as shown by the blue arrow (x 1).
9. Route the harness from the counter device in the same way as the other harnesses [E] (x 3).
10. Connect the harness from the counter device to CN4 on the key counter interface board.
11. Reattach the IOB bracket (p.4-131 "Controller Box").
12. Reassemble the machine.

WWW.SERVICE-MANUAL.NET

2.18 USB2.0/SD SLOT TYPE F (D546)

2.18.1 ACCESSORY CHECK

Check the quantity and condition of the accessories against the following list.

No.	Description	Q'ty
1	USB2.0/SD Slot	1
2	Ground Plate	1
3	USB Cable	1
4	Screw: M3 x 6 blue	1
5	Screw: M3 x 8	4
6	Screw: M3 x 6 (Not used)	1
7	Bracket (Not used)	1
8	PDF Direct Card*1	1

*1: If the PostScript 3 option is used in this machine, this card is not necessary.

2.18.2 INSTALLATION PROCEDURE

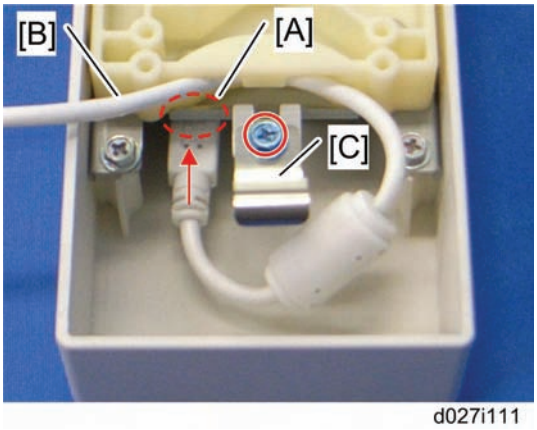

1. Connect the USB cable [B] to the USB slot [A] in the USB2.0/SD Slot as shown above.
2. Attach the ground plate [C] to the bracket of the USB2.0/SD Slot (x 1: M3x6 blue).

WWW.SERVICE-MANUAL.NET

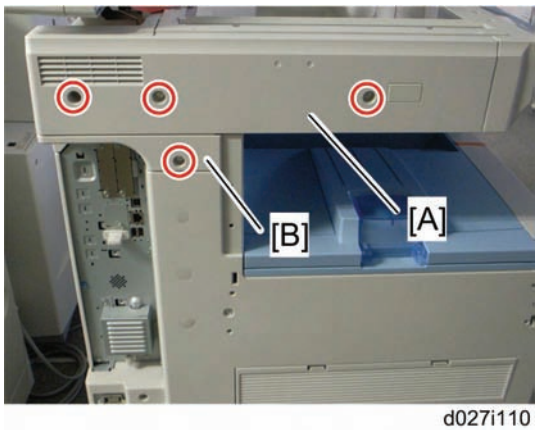

d027i110

3. Remove the scanner left cover [A] (x 3).
4. Remove the left frame cover [B] (x 1).

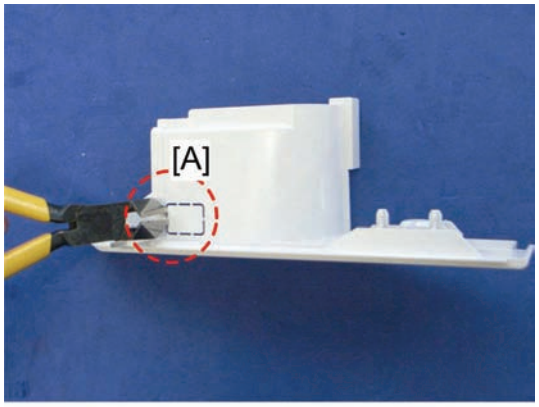

d027i112

5. Remove the part [A] of the left frame cover with pliers or a similar tool.
6. Reinstall the left frame cover (x 1).

d027i113

7. Remove the part [A] on the scanner left cover.

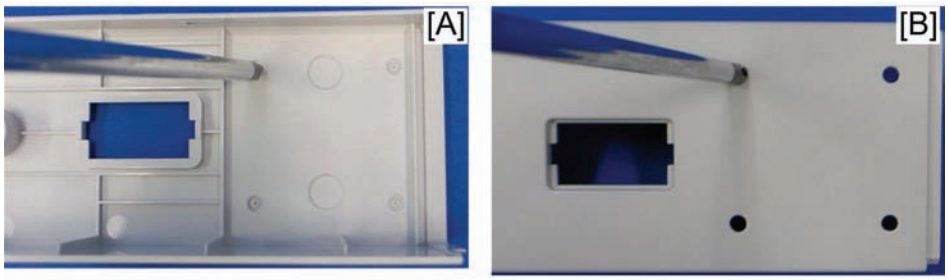

d027i113a

8. Make four holes in the scanner left cover with a screwdriver as shown [A].

Note

- Smooth the four holes in the scanner left cover as shown [B].

WWW.SERVICE-MANUAL.NET

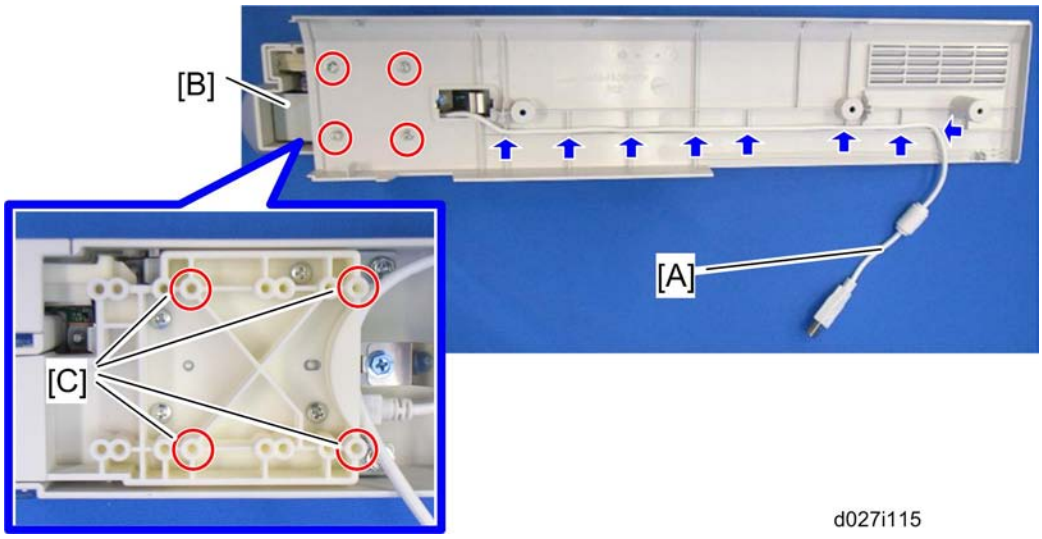

9. Route the USB cable [A] through the gaps in the left scanner cover.
10. Secure the USB2.0/SD Slot [B] with the left scanner cover as shown above (x 4: M3x8).

Note

- Use the screw holes [C] as shown above.

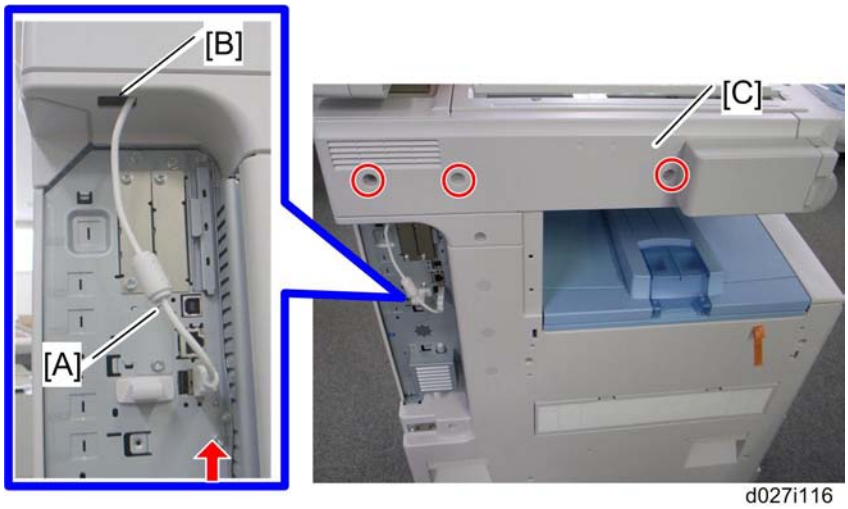

11. Put the USB cable [A] through the cutout [B] in the left frame cover.
12. Attach the scanner left cover [C] to the mainframe, and then connect the USB cable [A] to USB-A (front side) as shown above (x 3).

Note

- Make sure that the USB cable is inserted in USB-A (front side).

⇒ **If PostScript 3 is already installed, go to step 18. If not, follow the steps from 13 to 21.**

13. Remove the SD slot cover (x 1), and move the SD card from SD slot 1 to SD slot 2.
14. Insert the PDF direct card in SD slot 1.
15. Plug in and turn on the mainframe.

WWW.SERVICE-MANUAL.NET

16. Enter the System SP mode.
17. Move HDD Security Applications (HDD Encryption unit and Data Overwrite Security Unit) from the SD card in SD slot 2 to the SD card in SD slot 1 with SP5-873-001 "Move Exec".
18. Enter the Scanner SP mode, and then change the setting of SP1013-001 from "0" to "1".
19. Enter the Printer SP mode, and then change the setting of SP1110-001 from "0" to "1".
20. Exit the SP mode, and then turn off the machine.
21. Remove the SD card in slot 2, and then attach the SD slot cover (x 1).
    - Keep this card in the safe place (p.2-78 "SD Card Appli Move").
22. Check the operation of the USB2.0/SD Slot.

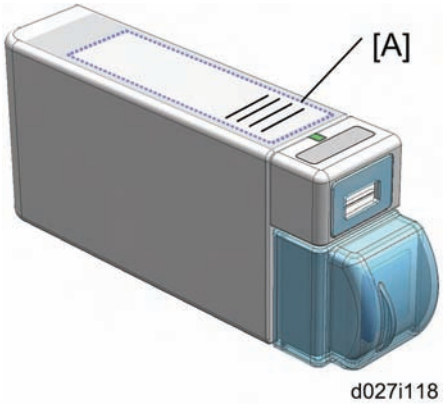

23. Attach the decal [A] to the USB2.0/SD Slot as shown above.

2.18.3 TESTING THE SD CARD/USB SLOT

1. Insert an SD card or USB memory device in the slot.
   You can connect only one removable memory device at a time.
2. Close the media slot cover.
   If you leave the cover open, static electricity conducted through an inserted SD card could cause the machine to malfunction.
3. Make sure that no previous settings remain.
   If a previous setting remains, press the [Clear Modes] key.
4. Place an original on the exposure glass.
5. Press [Store File].
6. Press [Store to Memory Device].
7. Press [OK].
8. Press the [Start] key.
   When writing is complete, a confirmation message appears.
9. Press [Exit].
10. Remove the memory device from the media slot.

Note

- Do not remove the memory device while writing is in process.

WWW.SERVICE-MANUAL.NET

2.19 CARD READER BRACKET TYPE C5501 (D547)

2.19.1 COMPONENT CHECK

Check the quantity and condition of the accessories against the following list.

No.	Description	Q'ty
1	Upper Tray	1
2	Lower Tray	1
3	Tray Bracket	1
4	Screw: M3 x 8	2
5	Screw: M3 x 14*[1]	1
6	Screw: M3 x 25	1
7	Tapping Screw: M3 x 10	3
8	Clamp	5

*1: Not used in this machine

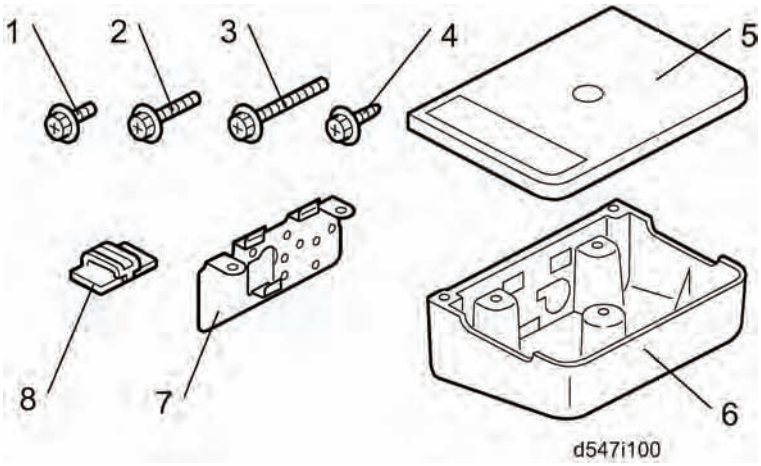

WWW.SERVICE-MANUAL.NET

2.19.2 INSTALLATION PROCEDURE

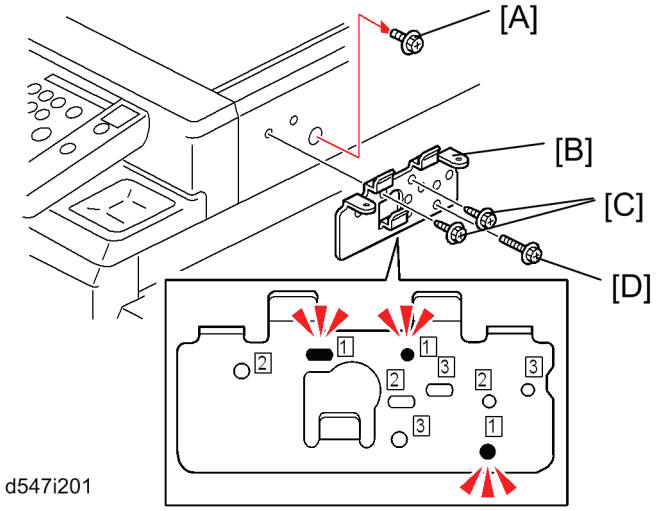

1. Remove the screw [A] on the scanner right cover.
2. Attach the tray bracket [B] to the scanner right cover ([C] x 2: M3x10, [D] x 1: M3x25).
   - For this model, use the screw holes marked "1" on the table bracket.

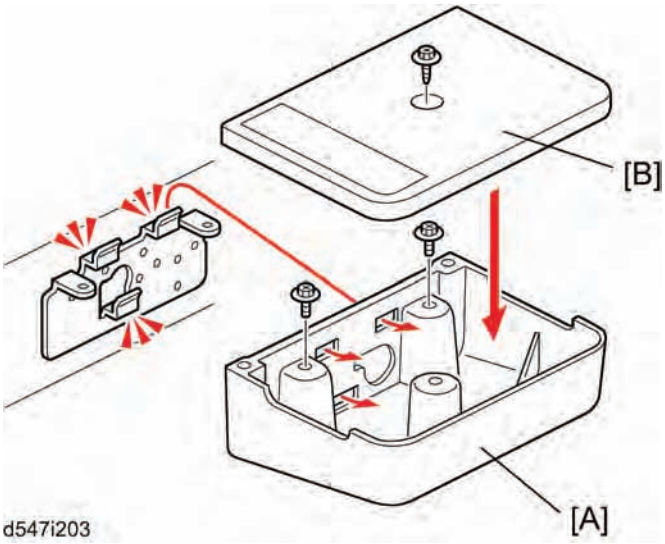

3. Attach the lower tray [A] to the tray bracket (x 2: M3x8).
4. Attach the upper tray [B] to the tray bracket (x 1: M3x8).
5. Use the clamps as necessary to clamp the cable of the card read/writer device.

Important

- The smart card reader must be placed on this card reader table. If not, some antenna or transmitter in the main machine may be interrupted.

WWW.SERVICE-MANUAL.NET

2.20 ANTI-CONDENSATION HEATER (SCANNER)

Note

- This option is provided as a service part.

2.20.1 INSTALLATION PROCEDURE

1. Remove the ARDF or platen cover (☛ p.2-32 "ARDF DF3040 (D540)")
2. Remove the rear cover (☛ p.4-15).
3. Remove the ARDF exposure glass and exposure glass with left scale (☛ p.4-20).
4. Remove the scanner rear frame (☛ p.4-22 "Scanner Motor")

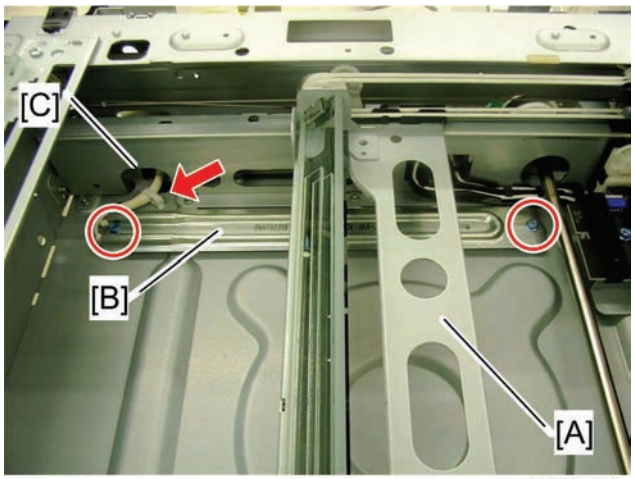

b222i518

5. Move the scanner carriage [A] to the right side by rotating the scanner motor.
6. Install the heater [B] in the scanner unit (x 2, x 1)
7. Put the cable through the cutout [C].

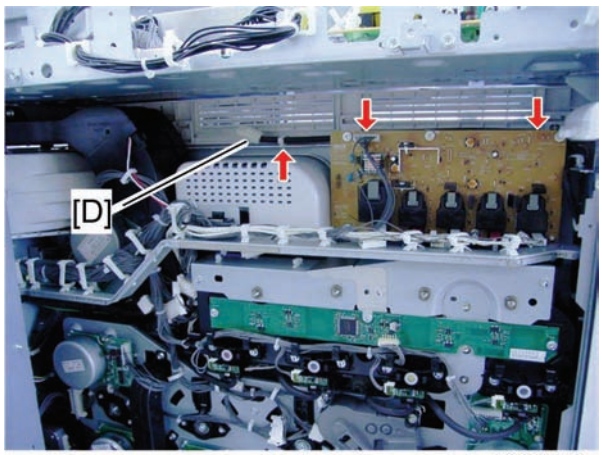

b222i519

8. Release the heater relay cable [D] (x 3).

WWW.SERVICE-MANUAL.NET

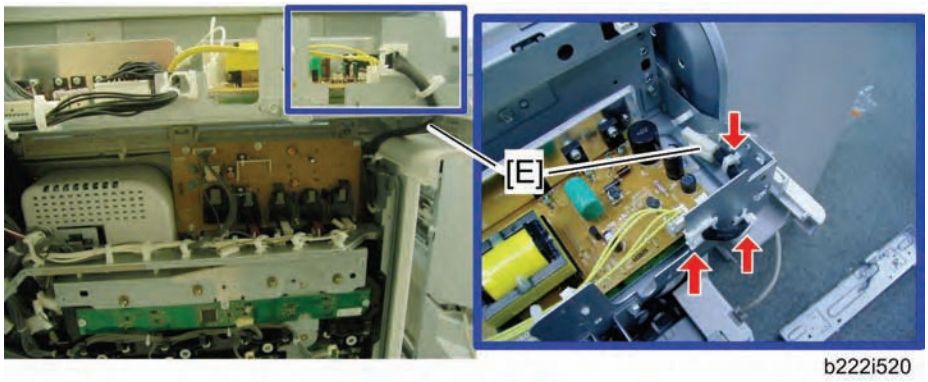

9. Route the heater relay cable [E] as shown (🖶 x 3).

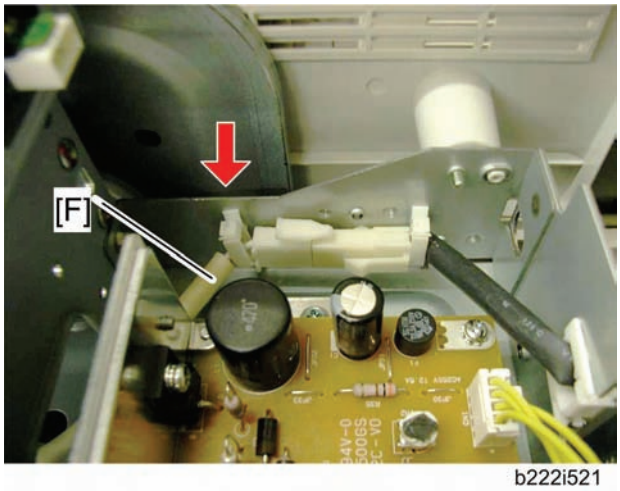

10. Connect the heater cable [F] to the heater relay cable (🖶 x 1).
11. Reassemble the machine.

WWW.SERVICE-MANUAL.NET

2.21 ANTI-CONDENSATION HEATER TYPE A

Note

- This option is provided as a service part.

2.21.1 COMPONENT CHECK

No.	Description	Q'ty
1	Tray heater	1
2	On-standby decal	1 (-90) or 2 (-91)
3	Harness 2 (For D387)*1	1
4	Harness 1 (For D537/D538)	1
5	Screw M4 x 10	2
-	Installation procedure	1

*1: This harness is not used in this machine.

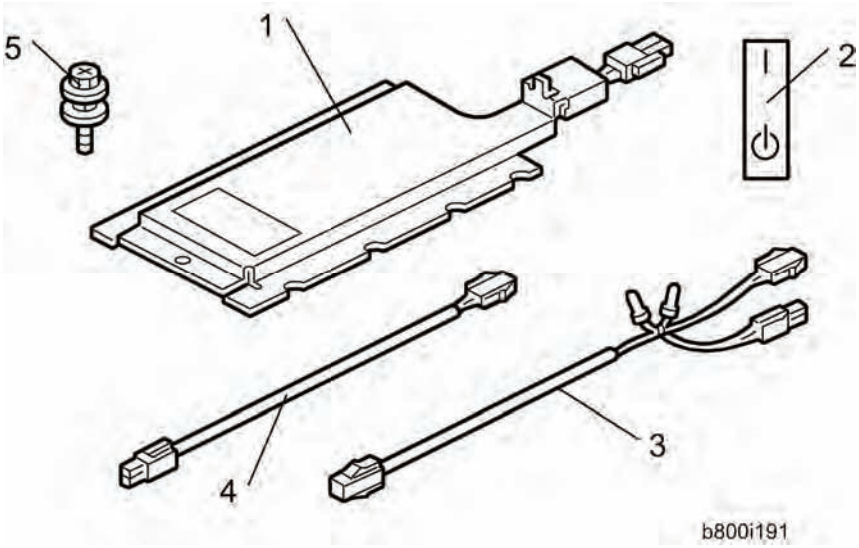

WWW.SERVICE-MANUAL.NET

2.21.2 INSTALLATION PROCEDURE

CAUTION

- Unplug the machine power cord before starting the following procedure.
- Do the following procedure not to damage any harnesses.
- Check that any harnesses are not damaged nor pinched after installation.

For installing the tray heater in the main machine

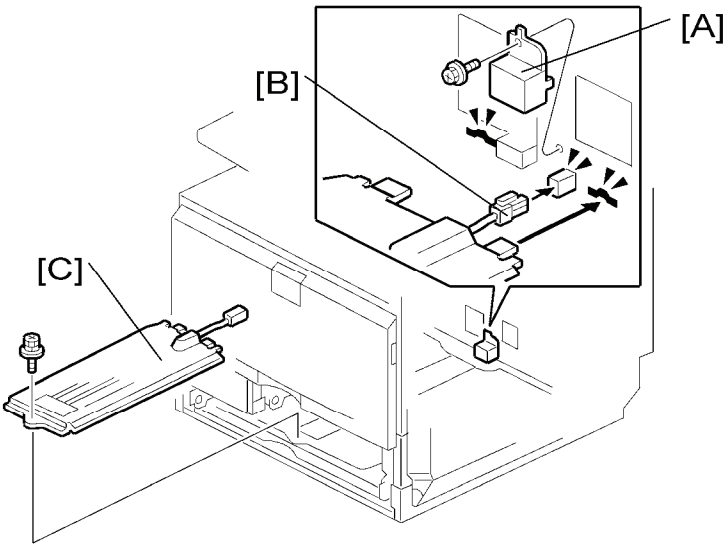

1. Remove trays 1 and 2 from the machine.
2. Remove the connector cover [A] (x 1).
3. Connect the connector [B] of the heater to the connector of the main machine.
4. Install the heater [C] inside the machine (x 1)
5. Reassemble the machine.

For installing the tray heater in D537

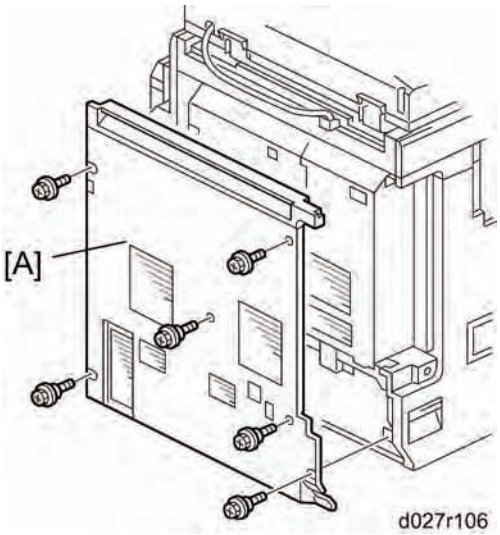

WWW.SERVICE-MANUAL.NET

1. Rear cover [A] (x 6)
2. Pull out the two trays in the optional paper feed unit.

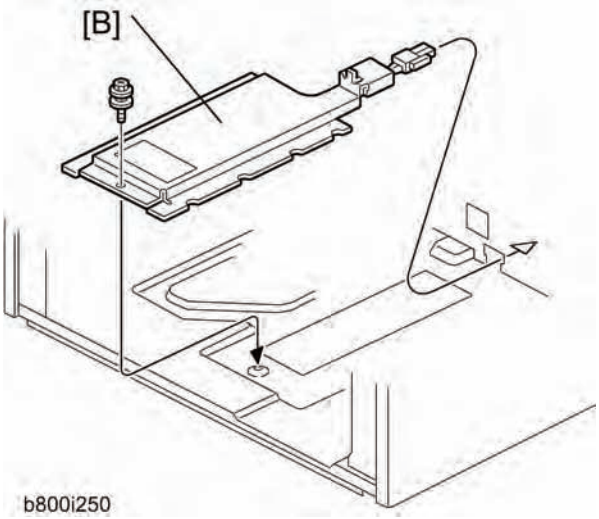

3. Install the tray heater [B] in the optional paper feed unit (x 1).

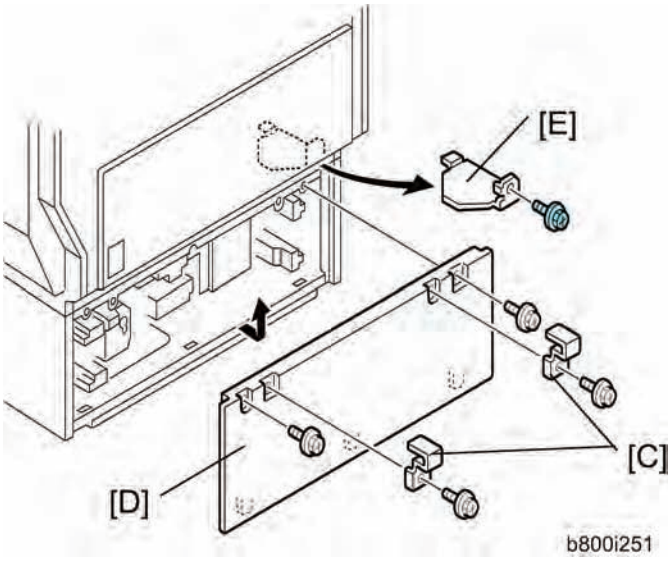

4. Remove the two securing brackets [C] (x 1 each), and then the rear cover [D] of the optional paper feed unit (x 2).
5. Remove the harness cover bracket [E] (x 1).

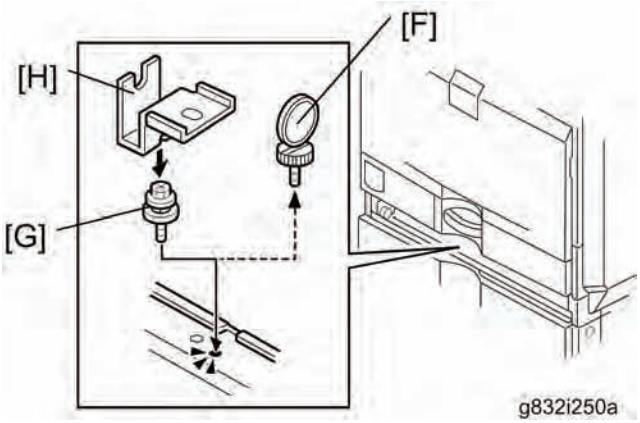

WWW.SERVICE-MANUAL.NET

6. Pull out tray 2 from the mainframe.
7. Replace the shoulder screw [F] with the washer screw [G], using securing bracket [H] (x 1).

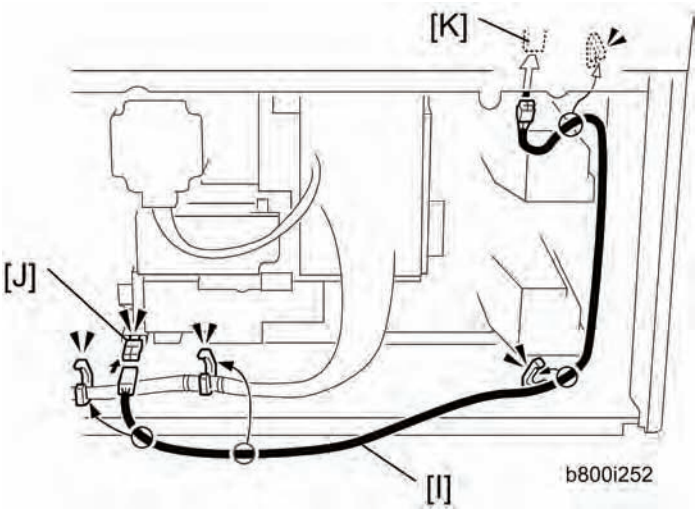

8. Connect the harness [I] to the connector [J] of the tray heater.
9. Route the harness [I] as shown and clamp it with four clamps (x 4).
10. Connect the harness [I] to the connector [K] of the mainframe.
11. Reassemble the mainframe and optional paper feed unit.

For Installing the Tray Heater in D538

1. Remove the rear cover of the mainframe (step 1 in "For Installing the Tray Heater in D537").
2. Pull out the LCT drawer.

Note

- If the right tray comes out with the left tray, push the right tray into the LCT.

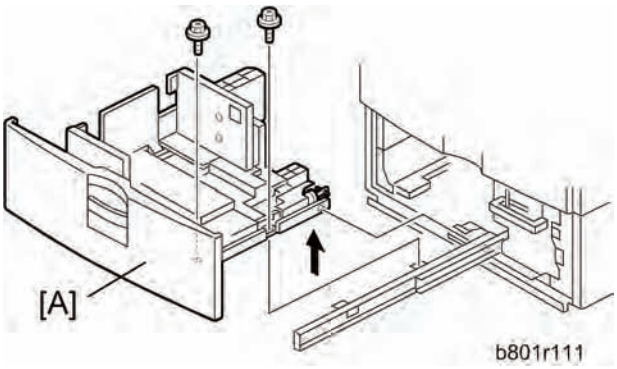

3. Left tray [A] (x 2)

WWW.SERVICE-MANUAL.NET

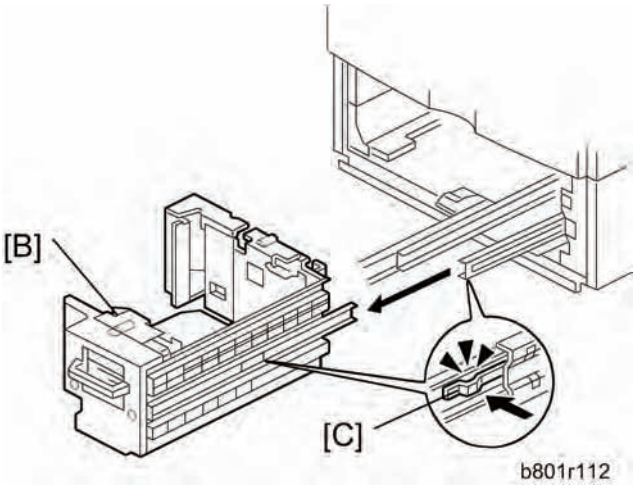

4. Remove the right tray [B] while pressing down the stopper [C].

Note

- When reinstalling the right tray, set the right tray on the guide rail and carefully push the tray in, making sure to keep the tray level.

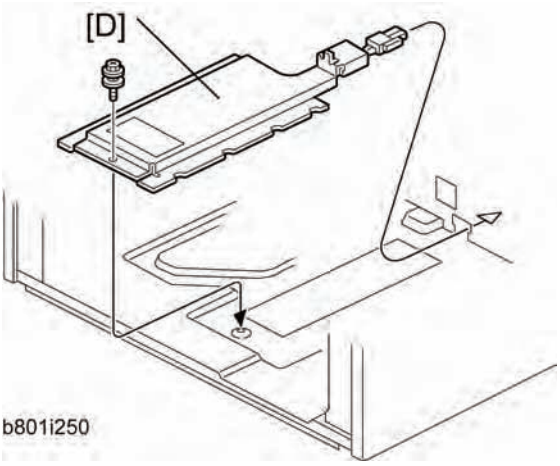

5. Install the tray heater [D] in the optional LCT (x 1).

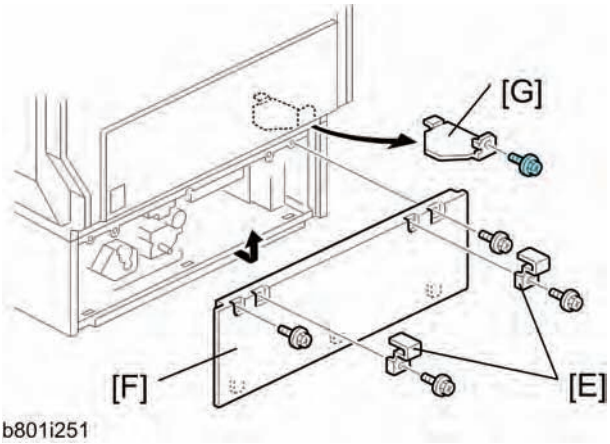

6. Remove the two securing brackets [E] (x 1 each), and the then rear cover [F] of the optional LCT (x 2).
7. Remove the harness cover bracket [G] (x 1).

WWW.SERVICE-MANUAL.NET

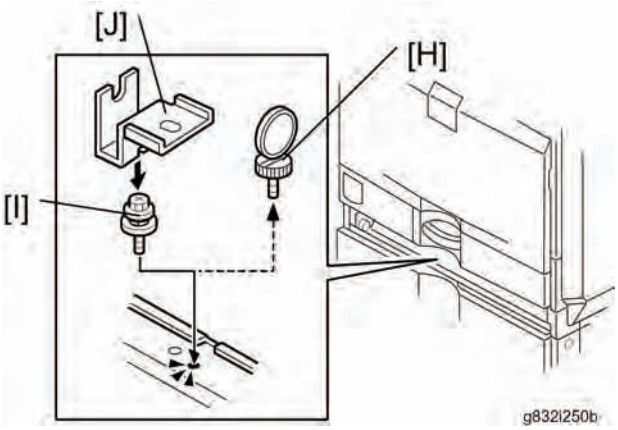

8. Pull out tray 2 from the mainframe.
9. Replace the shoulder screw [H] with the washer screw [I], using the securing bracket [J] (x 1).

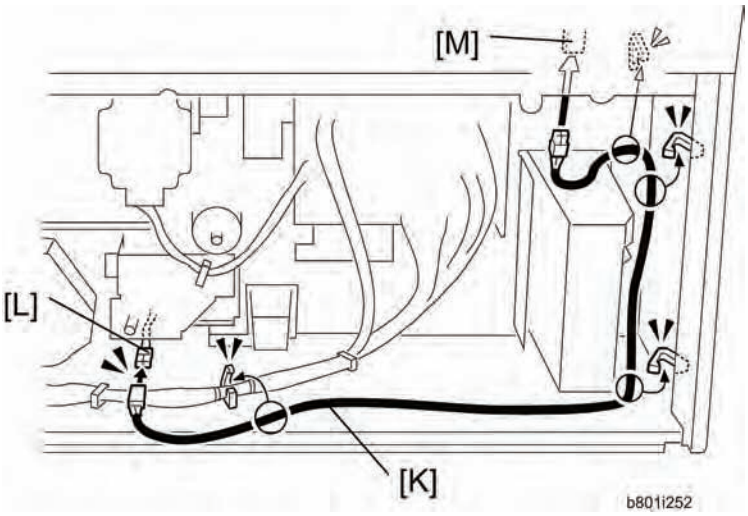

10. Connect the harness [K] to the connector [L] of the tray heater.
11. Route the harness [K] as shown and clamp it with four clamps (x 4).
12. Connect the harness [K] to the connector [M] of the mainframe.
13. Reassemble the mainframe and optional LCT.
14. Reassemble the mainframe and optional paper feed unit.

WWW.SERVICE-MANUAL.NET

2.22 CONTROLLER OPTIONS

2.22.1 OVERVIEW

Important

- Always touch a grounded surface to discharge static electricity from your hands before you handle SD cards, printed circuit boards, or memory boards.

This machine has I/F card slots for optional I/F connections and SD card slots applications. After you install an option, check that the machine can recognize it (see "Check All Connections" at the end of this section).

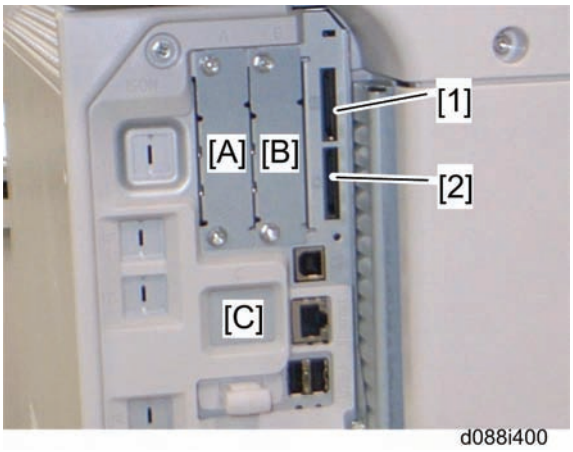

I/F Card Slots

- Slot A is used for one of the optional I/F connections (only one can be installed): IEEE1284, IEEE802.11a/g (Wireless LAN), Bluetooth or Remote Communication Gate.
- Slot B is used for the File Format Converter or Remote Communication Gate.
- Slot C is used for Gigabit Ethernet.

SD Card Slots

- Slot 1 is already occupied by the Security SD Card by factory default, and is also used for optional applications (e.g.: PostScript 3, PictBridge, IPDS unit, PDF direct, etc).
- Slot 2 is used for installing the Browser Unit, VM card or for service only (for example, updating the firmware).

WWW.SERVICE-MANUAL.NET

2.22.2 SD CARD APPLI MOVE

Overview

The service program "SD Card Appli Move" (SP5-873) lets you move application programs from one SD card to another SD card.

If more than one application is required, the applications must be moved to one SD card with SP5873-1 (PostScript 3, Security Application, PictBridge, IPDS unit, PDF Direct, etc.).

Be very careful when you do the SD Card Appli Move procedure:

- The data necessary for authentication is transferred with the application program from an SD card to another SD card. Authentication fails if you try to use the SD card after you move the application program from one card to another card.
- Do not use the SD card if it has been used before for other purposes. Normal operation is not guaranteed when such an SD card is used.

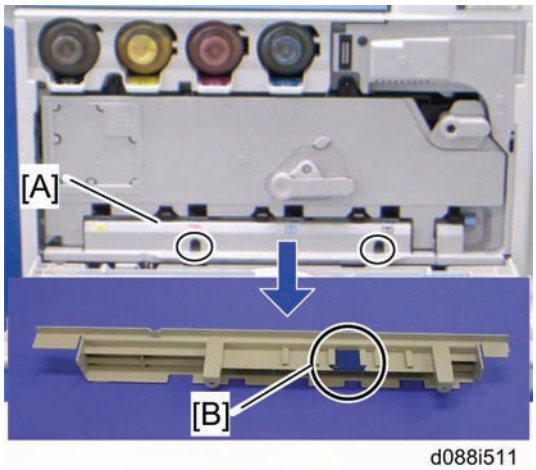

- Remove the cover [A] (x 2), and then keep the SD card in the place [B] after you move the application program from one card to another card. This is done for the following reasons:
  - The SD card can be the only proof that the user is licensed to use the application program.
  - You may need to check the SD card and its data to solve a problem in the future.
- You cannot move the PostScript or PDF Direct application to another SD card. You have to move the other application (PictBridge, Security Applications, IPDS unit) to the SD card that stores the PostScript or PDF Direct application.

WWW.SERVICE-MANUAL.NET

Move Exec

The menu "Move Exec" (SP5-873-001) lets you move application programs from the original SD card to another SD card.

Important

- Do not turn ON the write protect switch of the system SD card or application SD card on the machine. If the write protect switch is ON, a download error (e.g. Error Code 44) occurs during a firmware upgrade or application merge.

1. Turn the main switch off.
2. Make sure that a target SD card is in SD Card Slot 1. The application program is moved to this SD card.
3. Insert the source SD card with the application program in SD Card Slot 2.The application program is copied from this source SD card.
4. Turn the main switch on.
5. Start the SP mode.
6. Select SP5-873-001 "Move Exec".
7. Follow the messages shown on the operation panel.
8. Turn the main switch off.
9. Remove the source SD card from SD Card Slot 2.
10. Turn the main switch on.
11. Check that the application programs run normally.

Undo Exec

"Undo Exec" (SP5-873-002) lets you move back application programs from an SD card in SD Card Slot 1 to the original SD card in SD Card Slot 2. You can use this program when, for example, you have mistakenly copied some programs by using Move Exec (SP5-873-001).

Important

- Do not turn ON the write protect switch of the system SD card or application SD card on the machine. If the write protect switch is ON, a download error (e.g. Error Code 44) occurs during a firmware upgrade or application merge.

1. Turn the main switch off.
2. Insert the original SD card in SD Card Slot 2. The application program is copied back into this card.
3. Insert the SD card with the application program in SD Card Slot 1.The application program is copied back from this SD card.
4. Turn the main switch on.
5. Start the SP mode.
6. Select SP5-873-002 "Undo Exec."

WWW.SERVICE-MANUAL.NET

7. Follow the messages shown on the operation panel.
8. Turn the main switch off.
9. Remove the SD card from SD Card Slot 2.
10. Turn the main switch on.
11. Check that the application programs run normally.
12. Make sure that the machine can recognize the option (see ‘Check All Connections’ at the end of this section).

2.22.3 POSTSCRIPT3 UNIT TYPE C5501

The PostScript3 application and fonts cannot be moved to another SD card. However, other applications can be moved onto the PostScript3 SD card.

CAUTION

- Unplug the main machine power cord before you do the following procedure.

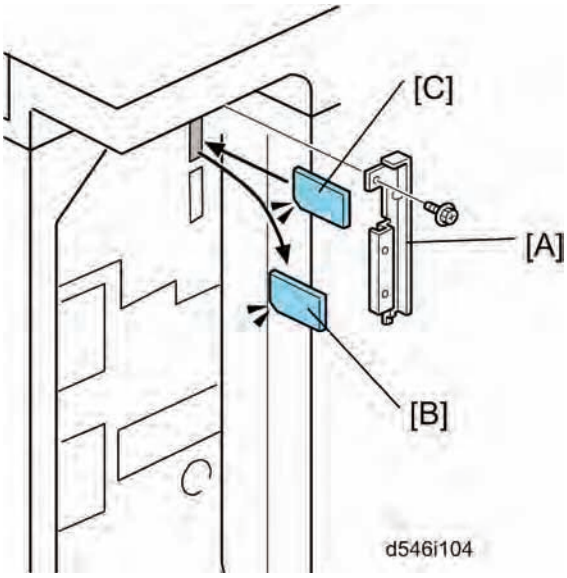

1. Remove the SD-card slot cover [A] from the SD card slots (x 1).
2. Move the SD card (security applications) [B] from SD slot 1 to SD slot 2.
   - If the VM card is already in SD slot 2, first remove the VM card in SD slot 2.
3. Insert the SD card [C] (PostScript 3) in SD slot 1 with its label face towards the front of the machine. Then push it slowly into SD slot 1 until you hear a click.

WWW.SERVICE-MANUAL.NET

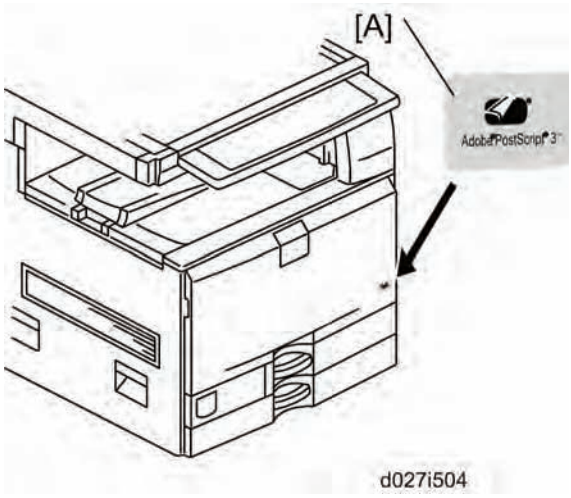

4. Attach the "Adobe PostScript 3" decal [A] to the front door.
5. Plug in, and then turn on the machine.
6. Move security applications from the SD card in SD slot 2 to the SD card in SD slot 1 with SP5-873-001.
7. Turn off the machine.
8. Remove the SD card from SD slot 2, and then keep it in a safe place (☛ SD Card Appli Move).
9. Insert the VM card in SD slot 2.
10. Attach the SD-card slot cover, and then turn on the machine (x 1).
11. Make sure that the machine can recognize the option (see ‘Check All Connections’ at the end of this section).

WWW.SERVICE-MANUAL.NET

2.22.4 IPDS UNIT TYPE C5501

CAUTION

- Unplug the main machine power cord before you do the following procedure.

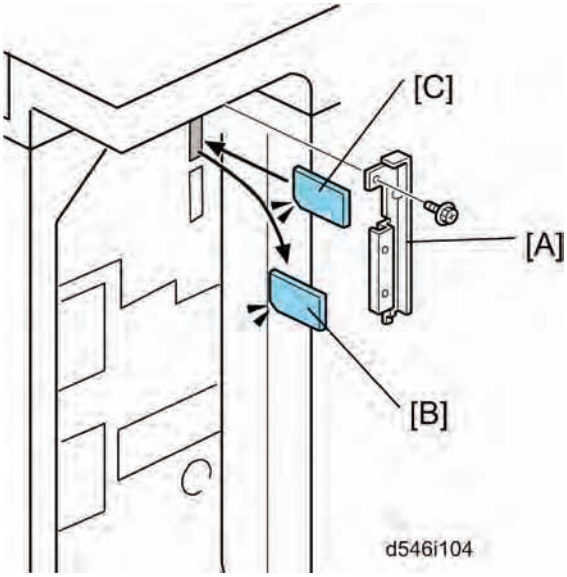

1. Remove the SD-card slot cover [A] from the SD card slots (x 1).
2. Move the SD card (security applications) [B] from slot 1 to slot 2.
   - If the VM card is already in slot 2, first remove the VM card in SD slot 2.
3. Insert the SD card [C] (IPDS Unit) in SD slot 1 with its label face towards the front of the machine.
4. Plug in, and then turn on the machine.
5. Move security applications from the SD card in SD slot 2 to the SD card in SD slot 1 with SP5-873-001.
6. Turn off the machine.
7. Remove the SD card from SD slot 2, and then keep it in a safe place (SD Card Appli Move).
8. Insert the VM card in SD slot 2.
9. Attach the SD-card slot cover, and then turn on the machine (x 1).

WWW.SERVICE-MANUAL.NET

2.22.5 FILE FORMAT CONVERTER TYPE E

CAUTION

- Unplug the main machine power cord before you do the following procedure.

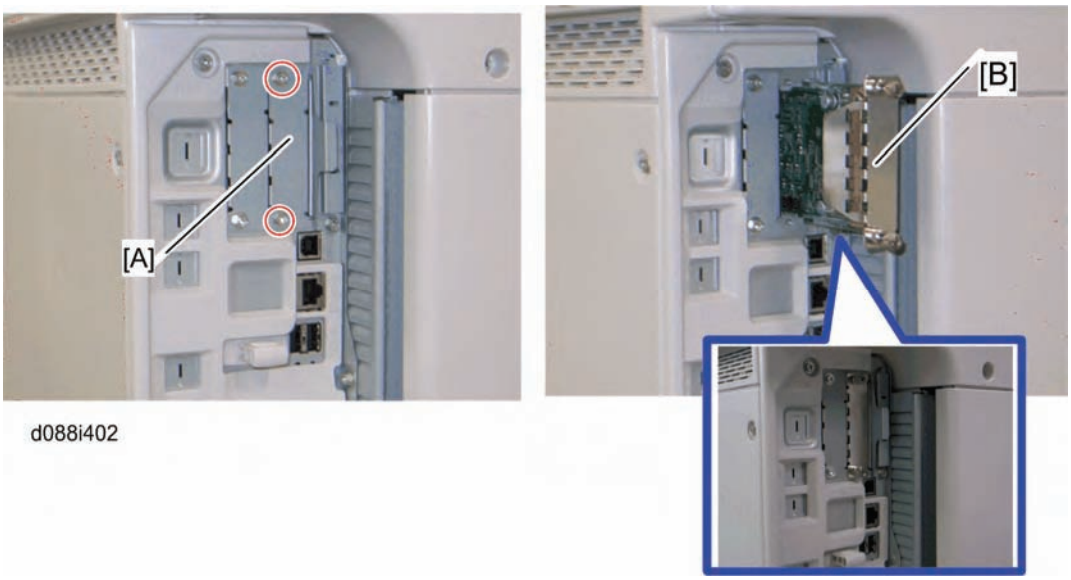

1. Remove the slot B cover [A] (x 2).
2. Install the file format converter [B] into slot B and then fasten it with screws.
3. Plug in and turn on the main power switch.
4. Check or set the following SP codes with the values shown below.

SP No.	Title	Setting
SP5-836-001	Capture Function (0:Off 1:On)	"1"
SP5-836-002	Panel Setting	"0"

5. Check the operation.
6. Make sure that the machine can recognize the option (see ‘Check All Connections’ at the end of this section).

WWW.SERVICE-MANUAL.NET

2.22.6 IEEE 1284 INTERFACE BOARD TYPE A

Installation Procedure

⚠CAUTION

- Unplug the main machine power cord before you do the following procedure.

You can only install one of the following network interfaces at a time: (IEEE 802.11 a/g, (Wireless LAN), IEEE1284, Bluetooth).

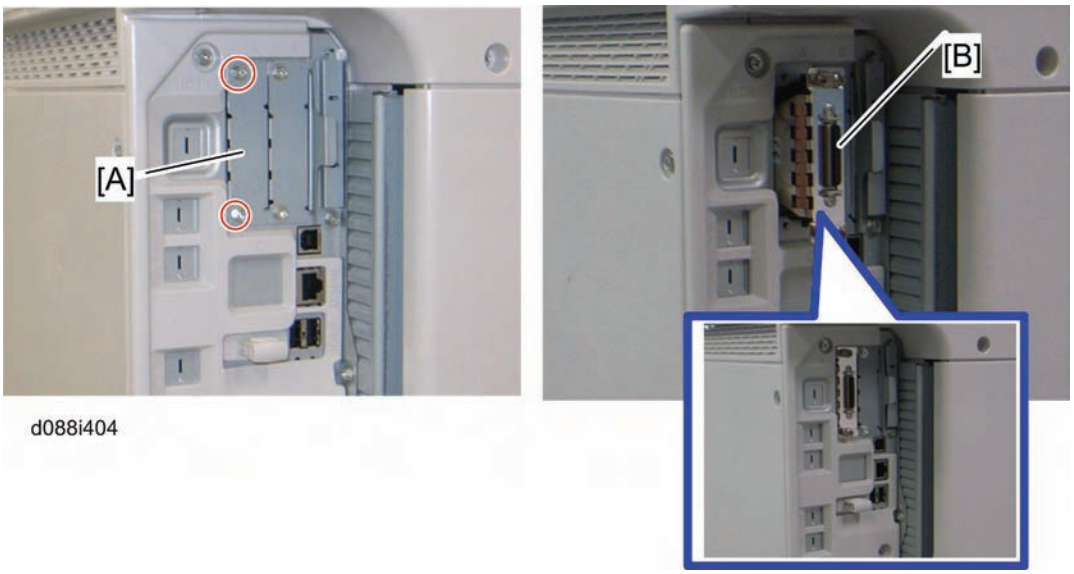

1. Remove the slot A cover [A] (x 2).
2. Install the interface board [B] (Knob-screw x 2) into the slot A.
3. Make sure that the machine can recognize the option (see 'Check All Connections' at the end of this section).

WWW.SERVICE-MANUAL.NET

2.22.7 IEEE 802.11A/G INTERFACE UNIT TYPE J

Installation Procedure

⚠CAUTION

- Unplug the main machine power cord before you do the following procedure.

You can only install one of the following network interfaces at one time: (IEEE 802.11 a/g, (Wireless LAN), IEEE1284, Bluetooth).

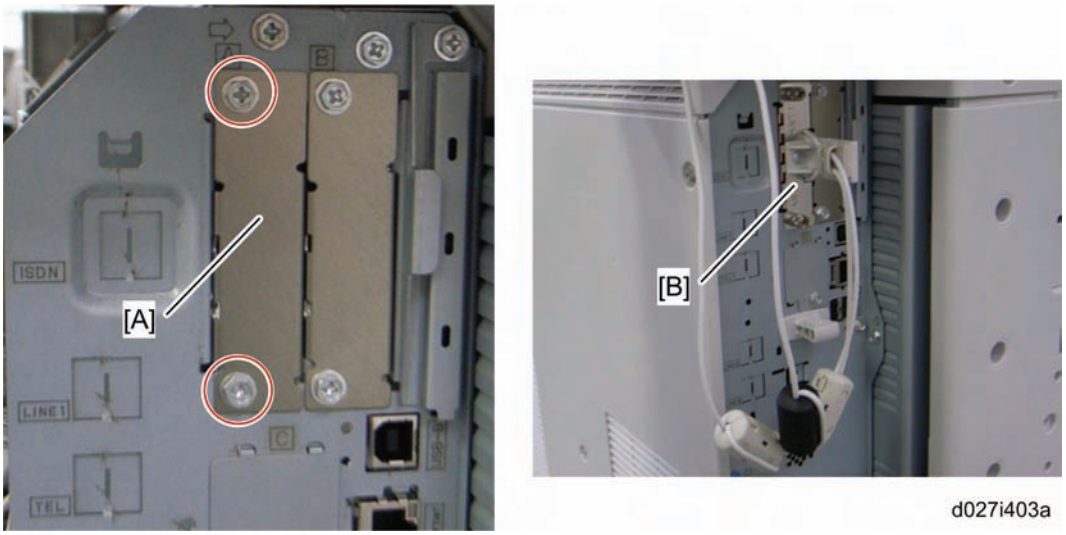

1. Remove the slot cover [A] from the board slot (x 2).
2. Install the wireless LAN board [B] (Knob-screw x 2) into the board slot.
3. Make sure that the machine can recognize the option (see 'Check All Connections' at the end of this section).

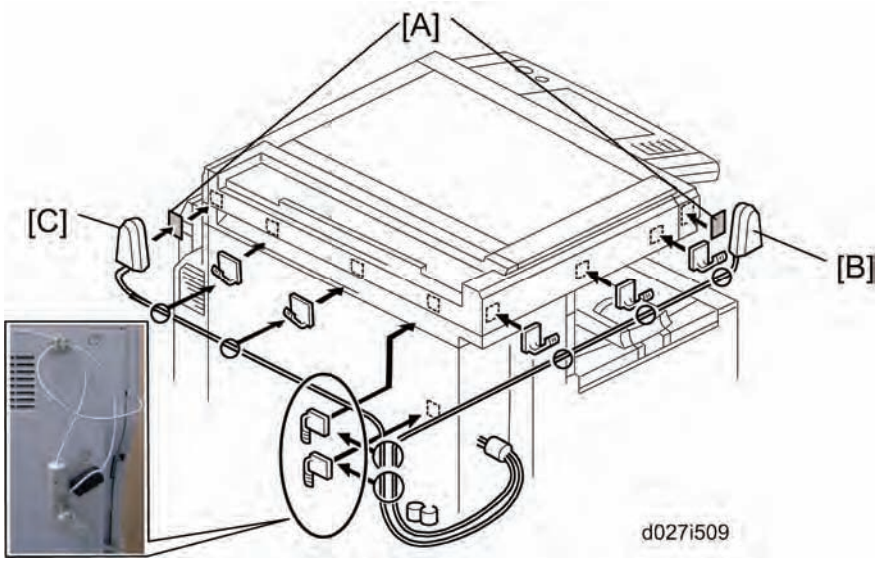

4. Peel off the double-sided tapes on the Velcro fasteners [A], and then attach them [A] at the front left and rear left of the machine.
5. Attach "ANT1" (having a black ferrite core) [B] to the front left of the machine.
6. Attach "ANT2" (having a white ferrite core) [C] to the rear right of the machine.

WWW.SERVICE-MANUAL.NET

Note

- "ANT1" is a transmission/reception antenna and "ANT2" is a reception antenna. Do not attach them at the wrong places.

7. Attach the clamps as shown above.
8. Wire the cables and clamp them (x 7).

Note

- Make sure that the cables are not slack. Keep them wired tightly along the covers.

You may have to move the machine if the reception is not clear.

- Make sure that the machine is not located near an appliance or any type of equipment that generates strong magnetic fields.
- Put the machine as close as possible to the access point.

Installing Various Hardware Combinations

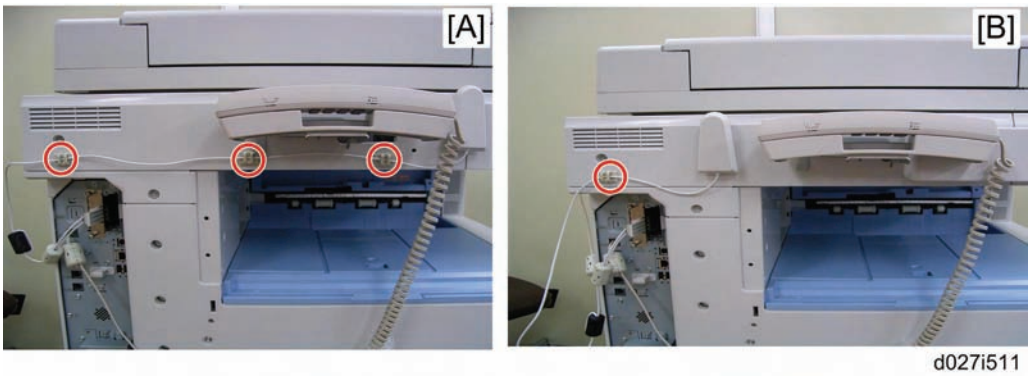

- Refer to the above picture [A] when installing the handset.
- Refer to the above picture [B] when installing the handset and the USB2.0/SD.

UP Mode Settings for Wireless LAN

Enter the UP mode. Then do the procedure below to perform the initial interface settings for IEEE 802.11 a/g. These settings take effect every time the machine is powered on.

Note

- You cannot use the wireless LAN if you use Ethernet.

1. Press the "User Tools/Counter" key.
2. On the touch panel, press "System Settings".

Note

- The Network I/F (default: Ethernet) must be set for either Ethernet or wireless LAN.

3. Select "Interface Settings".
4. Press "Wireless LAN". Only the wireless LAN options show.
5. Communication Mode. Select either "802.11 Ad hoc", "Ad hoc" or "Infrastructure".
6. SSID Setting. Enter the SSID setting. (The setting is case sensitive.)

WWW.SERVICE-MANUAL.NET

7. Channel. You need this setting when Ad Hoc Mode is selected.

   Range: 1 to 14 (default: 11)

   Note

   - The allowed range for the channel settings may vary for different countries.

8. WEP (Encryption) Setting. The WEP (Wired Equivalent Privacy) setting is designed to protect wireless data transmission. The same WEP key is required on the receiving side in order to unlock encoded data. There are 64 bit and 128 bit WEP keys.

   WEP:

   Selects "Active" or "Inactive" ("Inactive" is default.).

   Range of Allowed Settings:

   64 bit: 10 characters

   128 bit: 26 characters

9. Transmission Speed. Press the Next button to show more settings. Then select the transmission speed for the mode: Auto, 11 Mbps, 5.5 Mbps, 2 Mbps, 1 Mbps (default: Auto). This setting should match the distance between the closest machine or access point. This depends on which mode is selected.

   Note

   - For the Ad Hoc Mode, this is the distance between the machine and the closest PC in the network. For the Infrastructure Mode, this is the distance between the machine and the closest access point.

   11 Mbps: 140 m (153 yd.)

   5.5 Mbps: 200 m (219 yd.)

   2 Mbps: 270 m (295 yd.)

   1 Mbps: 400 m (437 yd.)

10. Press "Return to Default" to initialize the wireless LAN settings.

    Press "Yes" to initialize the following settings:

    - Transmission mode
    - Channel
    - Transmission Speed
    - WEP
    - SSID
    - WEP Key

WWW.SERVICE-MANUAL.NET

SP Mode and UP Mode Settings for IEEE 802.11 a/g Wireless LAN

The following SP commands and UP modes can be set for IEEE 802.11 a/g.

SP No.	Name	Function
5840-006	Channel MAX	Sets the maximum range of the channel settings for the country.
5840-007	Channel MIN	Sets the minimum range of the channels settings allowed for your country.
5840-011	WEP Key Select	Used to select the WEP key (Default: 00).
UP mode	Name	Function
	SSID	Used to confirm the current SSID setting.
WEP Key	Used to confirm the current WEP key setting.	
WEP Mode	Used to show the maximum length of the string that can be used for the WEP Key entry.	

WWW.SERVICE-MANUAL.NET

2.22.8 BLUETOOTH INTERFACE UNIT TYPE 3245

CAUTION

- Unplug the main machine power cord before you do the following procedure.

You can only install one of the following network interfaces at a time: (IEEE 802.11 a/g (Wireless LAN), IEEE1284, Bluetooth).

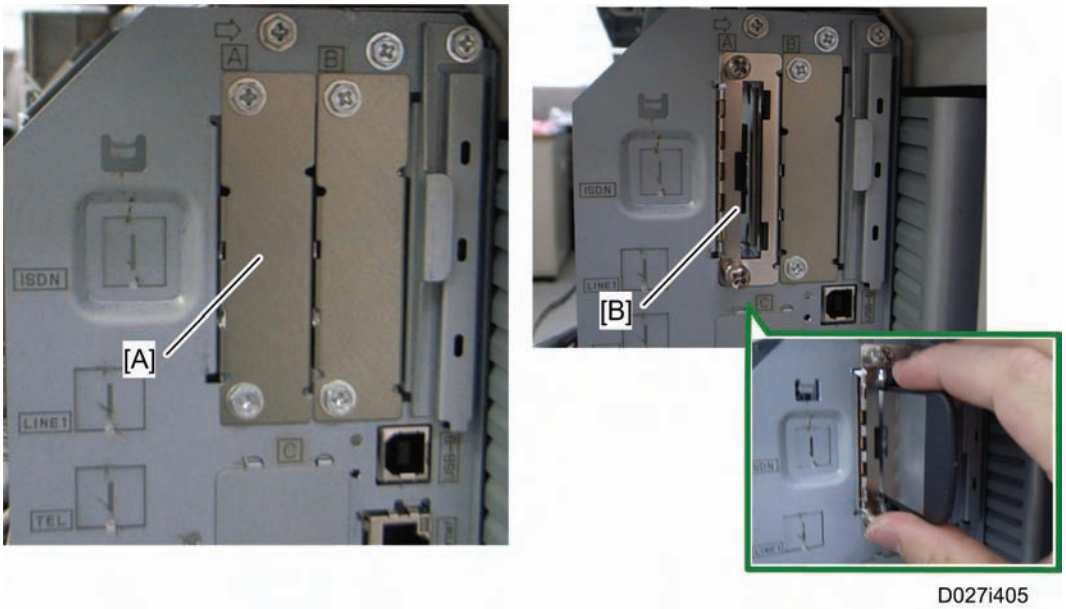

1. Remove the slot cover [A] (x 2).
2. Install the Bluetooth board [B] (Knob-screw x 2) into the slot A.
3. Insert the Bluetooth card into the Bluetooth card adaptor.
4. Install the Bluetooth card adaptor on the Bluetooth board.
5. Attach the antenna cap to the Bluetooth board.
6. Make sure that the machine can recognize the option (see ‘Check All Connections’ at the end of this section).

WWW.SERVICE-MANUAL.NET

2.22.9 CAMERA DIRECT PRINT CARD TYPE I

CAUTION

- Unplug the main machine power cord before you do the following procedure.

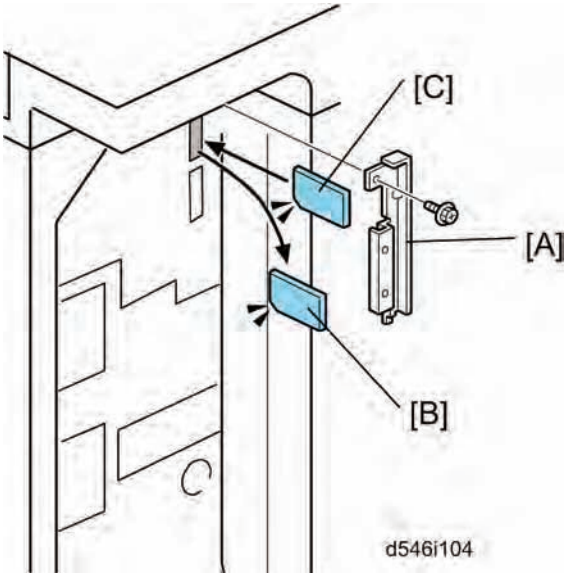

1. Remove the SD-card slot cover [A] from the SD card slots (x 1).
2. Move the SD card (security applications) [B] from SD slot 1 to SD slot 2.
   - If the VM SD card is already in SD slot 2, first remove the VM card in SD slot 2.
3. Insert the SD card [C] (PictBridge) in SD slot 1 with its label face to the front of the machine.
4. Plug in, and then turn on the machine.
5. Move security applications from the SD card in SD slot 2 to the SD card in SD slot 1 with SP5-873-001.
6. Turn off the machine.
7. Remove the SD card from slot SD 2, and then keep it in a safe place.
8. Insert the VM card in SD slot 2.
9. Attach the SD-card slot cover, and then turn on the machine (x 1).
10. Make sure that the machine can recognize the option (see ‘Check All Connections’ at the end of this section).

WWW.SERVICE-MANUAL.NET

⇒ 2.22.10 BROWSER UNIT TYPE E

Installation Procedure

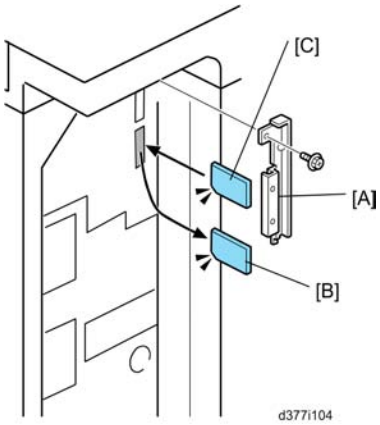

1. For models which have the VM card, do the following. Then continue with step 3:
   - Press “User tools” button to enter the User Tools mode.
   - Press “Extended Feature Settings” on the LCD.
   - Press “Extended Feature Settings” on the LCD again.
   - Press “Start up” tab.
   - Stop all SDK applications with touching application lines.
   - Exit UP mode, turn off the machine and unplug the power cord
   - Remove the slot cover for SD cards [A].
   - Remove the SD card (VM/JAVA) from SD slot 2 [B].
2. Turn off the machine and unplug the main machine power cord. Remove the slot cover for SD cards [A].
3. Turn the Browser SD card label face to the rear of the machine. Then push it slowly into slot 2 until you hear a click.
4. Plug in and turn on the main power switch.
5. Push the “User Tools” key.
   If an administrator setting is registered for the machine, steps 6 and 7 are required. Otherwise, skip to step 8.
6. Push the “Login/Logout” key.
7. Login with the administrator user name and password.
8. Touch “Extended Feature Settings” twice on the LCD.
9. Touch “Install” on the LCD.
10. Touch “SD card”.
11. Touch the “Browser” line.
12. Under “Install to”, touch “Machine HDD” and touch “Next”.
13. When you see “Ready to Install”, check the information on the screen to confirm your previous selection.

WWW.SERVICE-MANUAL.NET

14. Touch “OK”. You will see “Installing the extended feature… Please wait.” and then “Completed”.
15. Touch “Exit” to go back to the setting screen.
16. Touch “Change Allocation”.
17. Touch “Browser” line.
18. Press one of the hard keys, which you want to use for the Browser Unit. By default, this function is assigned to the “Other Functions” key (bottom key of the function keys).
19. Touch “OK”.
20. Touch “Exit” twice to go back to the copy screen.
21. Turn off the main power switch.
22. Install the function key for “Browser Unit” to the place you chose in step 18.
23. Turn on the main power switch.
24. When the reaches the Ready condition, press the key that you installed in step 22.
    Note: A message will be displayed confirming that the Browser Option was successfully installed.
25. Turn off the main power switch.
26. Remove the SD card from slot 2.
27. Reinstall the JAVA card in slot 2.
28. Attach the slot cover.
29. Ask the customer to keep the SD card in a safe place after you have installed the application program from the card to the HDD. This is because:

    - The SD card is the only proof that the user is licensed to use the application program.
    - You may need to check the SD card and its data to solve a problem in the future.

2.22.11 GIGABIT ETHERNET TYPE B

CAUTION

- Unplug the main machine power cord before you do the following procedure.

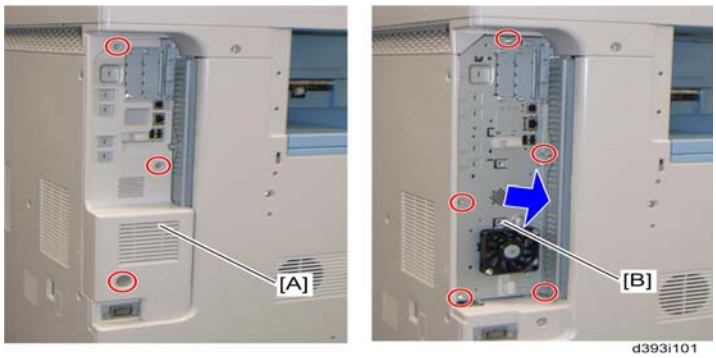

1. Remove the controller cover [A] (x 3).
2. Pull out the controller board [B] (x 5).

WWW.SERVICE-MANUAL.NET

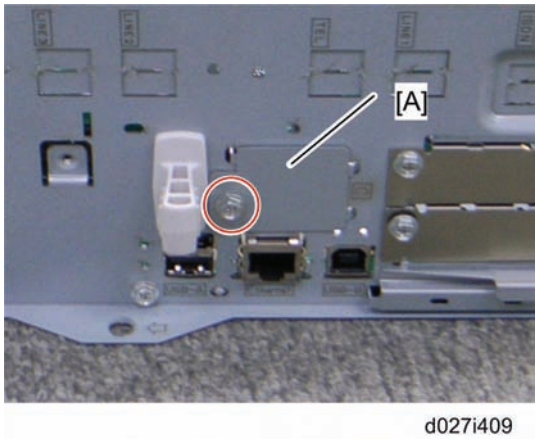

3. Remove the slot cover [A] (x 1).

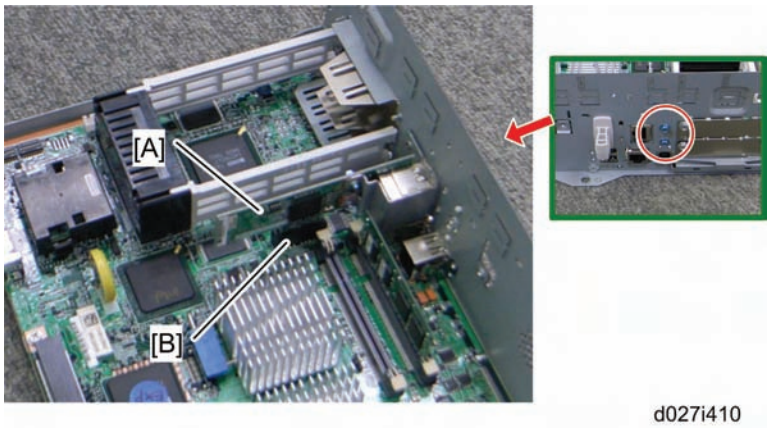

4. Attach the Gigabit Ethernet controller [A] into the slot [B] (x 2).
5. Reassemble the machine.
6. Check the operation of the Gigabit Ethernet

2.22.12 CHECK ALL CONNECTIONS

1. Plug in the power cord. Then turn on the main switch.
2. Enter the printer user mode. Then print the configuration page.
   User Tools > Printer Settings > List Test Print > Config. Page

All installed options are shown in the "System Reference" column.

WWW.SERVICE-MANUAL.NET

⇒ 2.23 SCANNER ACCESSIBILITY OPTION TYPE C5000 D423

2.23.1 INSTALLATION REQUIREMENTS

General Requirements

- Install the scanner on a solid base.
- Do not install the scanner in areas where the unit can fall down when the ADF cover is opened.
- Make sure you install the unit in area that allows easy access for operation.
- Ask a customer about their requirements before you install the unit.

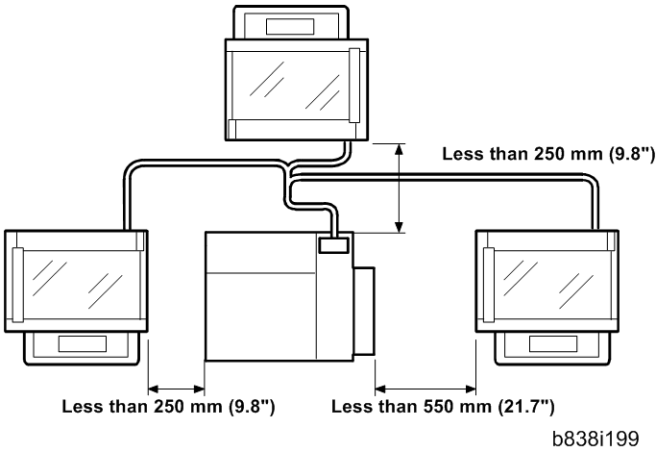

WWW.SERVICE-MANUAL.NET

Specific Requirements

- The scanner cable should not touch the floor.
- The cables should not hang free where they can become entangled with other equipment or furniture such as a wheelchair.
- The unit should be positioned within 380 to1220 mm (1.3 to 4 ft.) above the floor.
- The scanner should be positioned as follows:

Within 250 mm (9.8") from the left and rear side of the main unit

Within 550 mm (21.7") from the right side of the main unit

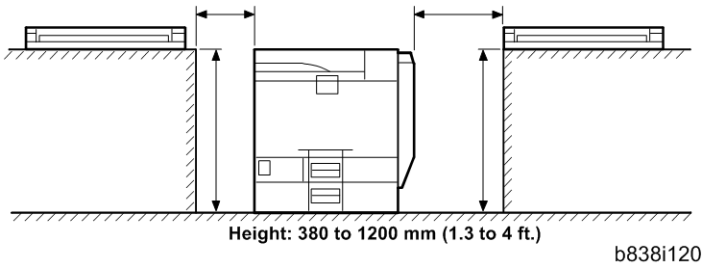

WWW.SERVICE-MANUAL.NET

Accessory Check

Check the accessories and their quantities against the following list.

No.	Description	O'ty
1	Top Rear Cover	1
2	Cable Bracket Cover	1
3	Top Right Cover	2
4	Left Scanner Stay	1
5	Right Bottom Plate	1
6	Left Bottom Plate	1
7	Cable Bracket Cover	1
8	Cable Cover	1
9	Left Stopper	1
10	Right Stopper	1
11	Top Right Cover	1
12	Right Bracket	1
13	Left Bracket	1
14	Scanner Right Cover	1
15	BICU I/F Harness	1
16	Operation Panel I/F Harness	1
17	MB I/F Harness	1
18	Cable Bracket Unit	1
19	Operation Panel I/F Board	1
20	MB I/F Board	1
21	Gasket – Scanner Frame	1
22	Gasket – Scanner Lens	1
23	Cable Band	1
24	Seal – Bottom	1
25	Ferrite Core	6
26	Shoulder Screw (only for installing key counter)	4
27	Adjuster	2
28	Screw 2 – Tapping: M3 x 8	1
29	Screw – Tapping: M3 x 6	4
30	Screw – Tapping: M4 x 8	1
31	Screw – Tapping: M4 x 16	1

WWW.SERVICE-MANUAL.NET

32	Screw – Tapping: M3 x 8	1
33	Screw – Round: M3 x 6	1
34	Screw – Tapping: M3 x 8 (blue)	1
35	Screw – Round: M4 x 8	1
36	Screw-Round: M4 x 8	3
37	Rubber Leg	3
38	Spacer	2

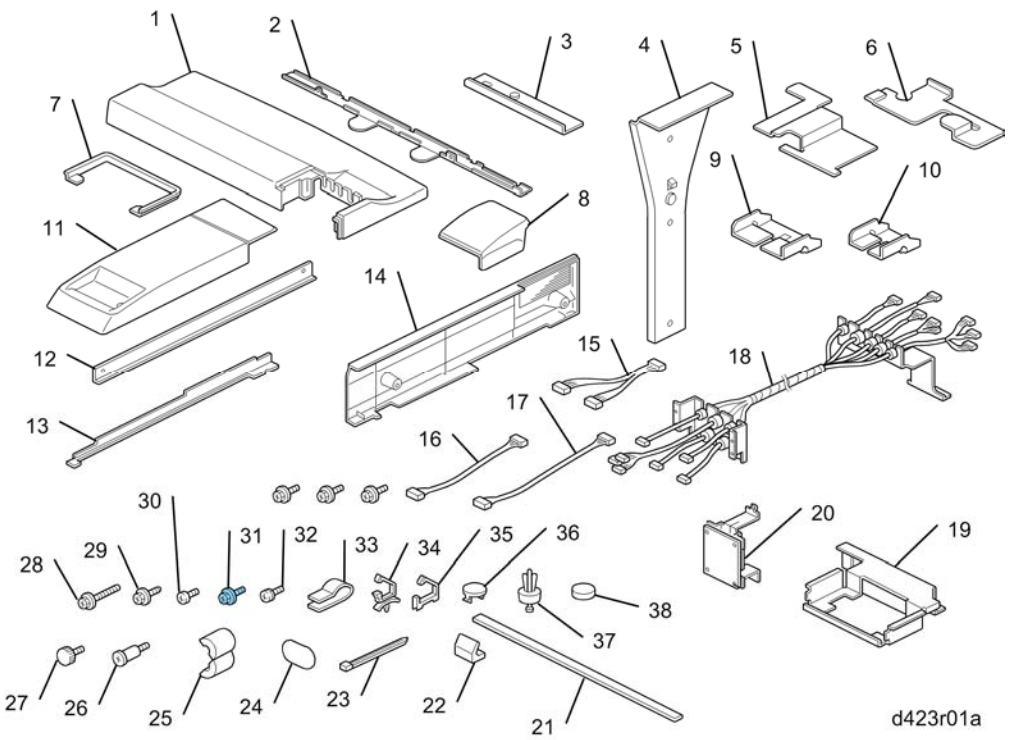

WWW.SERVICE-MANUAL.NET

Removal Procedure

Covers

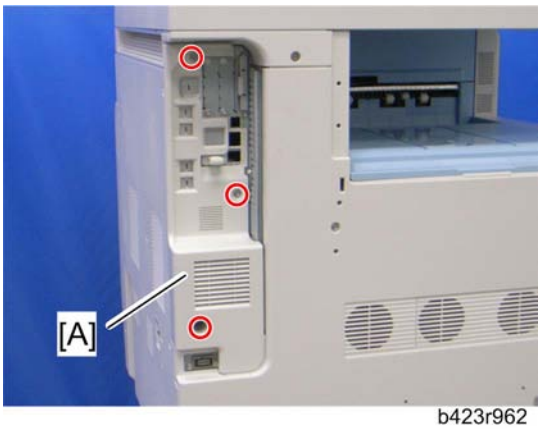

b423r962

1 Controller cover (🖉 x 3)

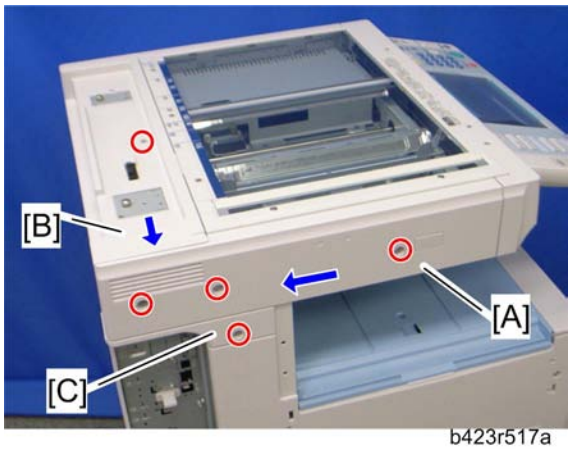

b423r517a

2 Scanner left cover [A] (🖉 x 3)

3 Slide the scanner rear cover [B] to the rear side, and then remove it (🖉 x 1, hook x 2).

4 Left rear cover [C] (🖉 x 1)

WWW.SERVICE-MANUAL.NET

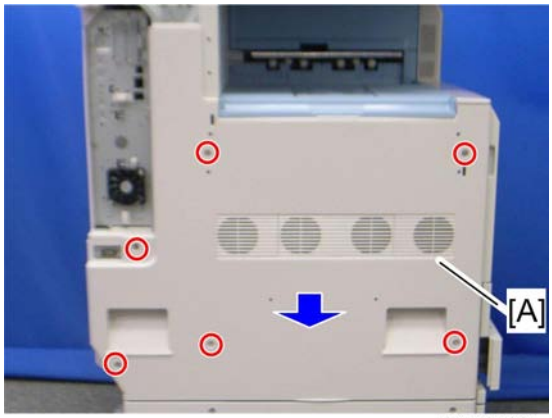

b423r201

5 Left cover [A] (🔩 x 6)

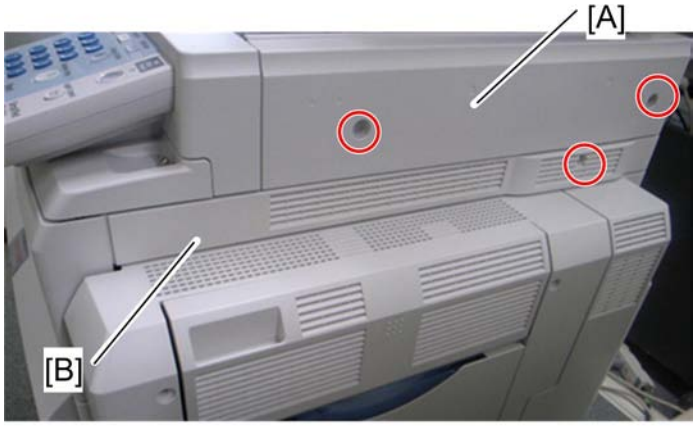

d009r990

6 Scanner right cover [A] (🔩 x 2)

7 Right top cover [B] (🔩 x 1)

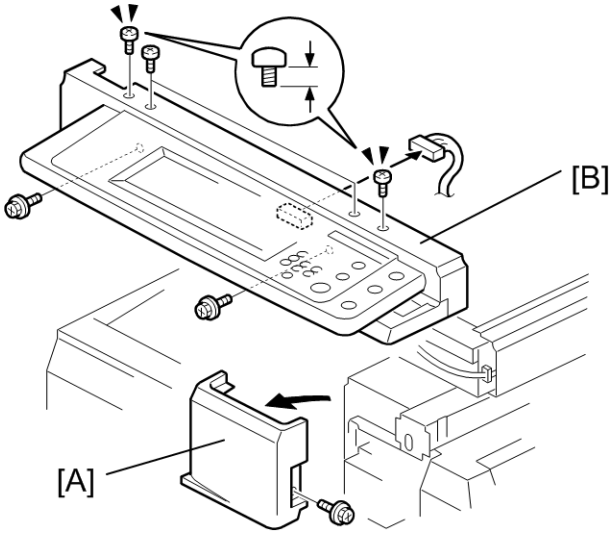

b222r157

8 Front right cover [A] (🔩 x 1)

WWW.SERVICE-MANUAL.NET

9 Operation panel with the scanner front cover [B] (🔩 x 6, M3 x 3: bind screw x 2, M3 x 5: bind screw x 2 on the top of the scanner front cover, M3 x 8: tapping screw x 2 on the bottom of the scanner front cover)

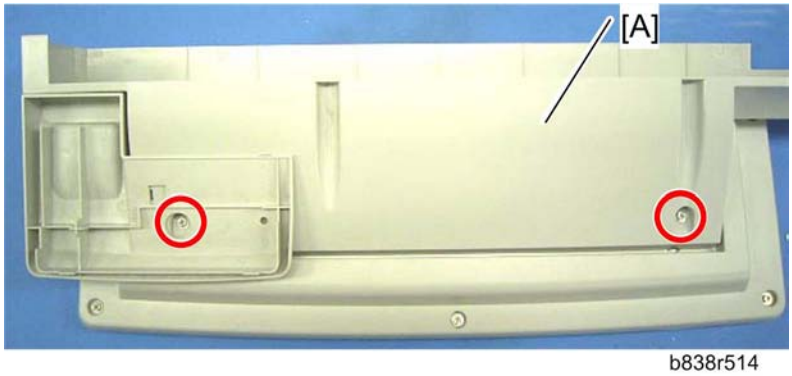

10 Scanner front cover [A] (🔩 x 2)

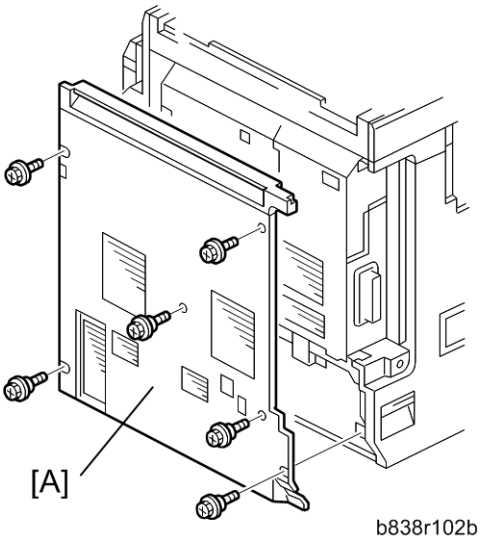

11 Rear cover [A] (🔩 x 6)

WWW.SERVICE-MANUAL.NET

Scanner Unit

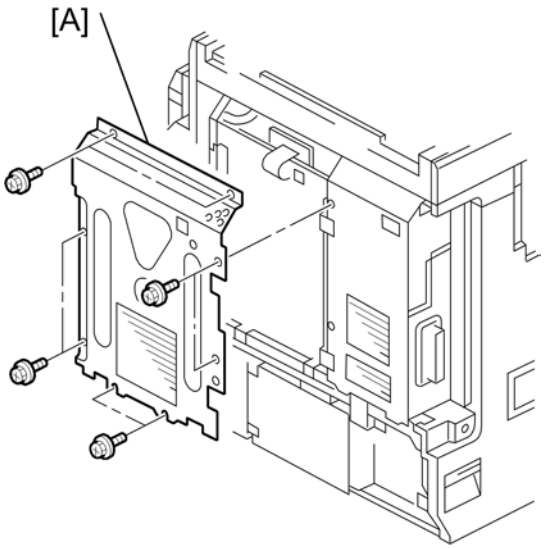

b838r107

Controller box right cover [A] (🔩 x 8)

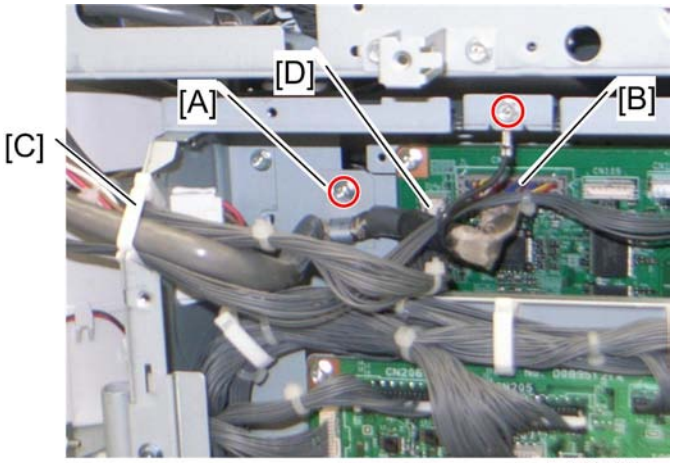

b423r901a

12 Remove the clamp plate [A] (🔩 x 1).
13 Disconnect the scanner I/F cable [B] from the connector (CN103) on the BICU (🔩 x 1, ground cable x 1).
14 Release the clamp [C].
15 Disconnect the harness [D] from the connector (CN101) on the BICU.

WWW.SERVICE-MANUAL.NET

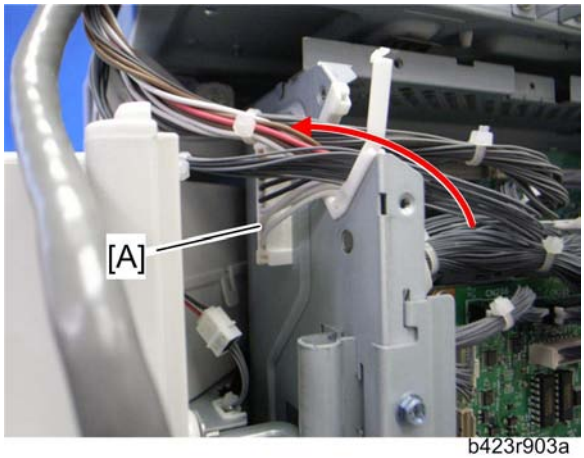

b423r903a

16 Disconnect the connector [A] on the controller box.

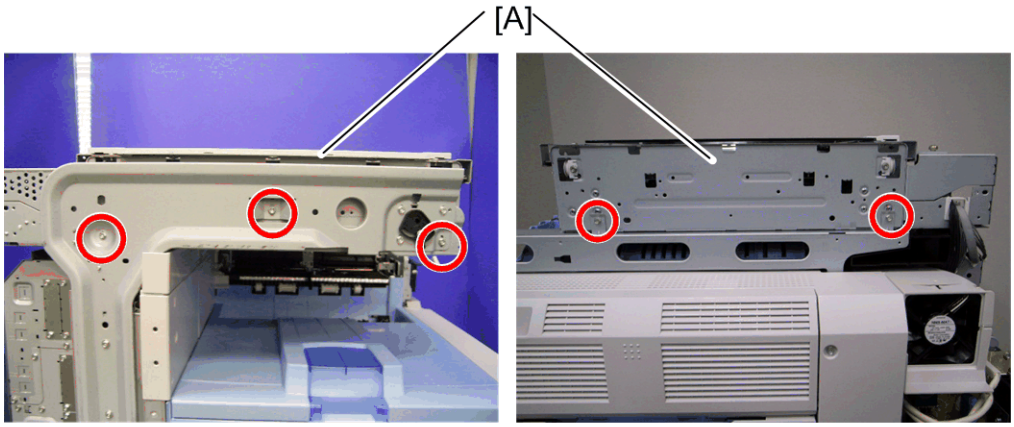

b838r902

17 Scanner unit [A] (🔩 x 5: right side x 2, left side x 3)

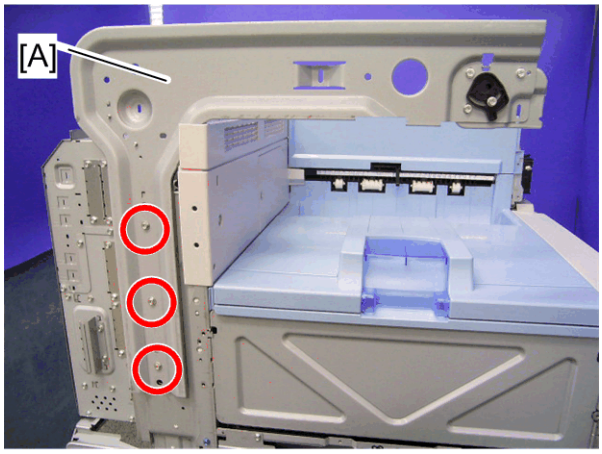

b838r904

18 Scanner left stay [A] (🔩 x 3)

WWW.SERVICE-MANUAL.NET

Connecting Procedure

Scanner Unit

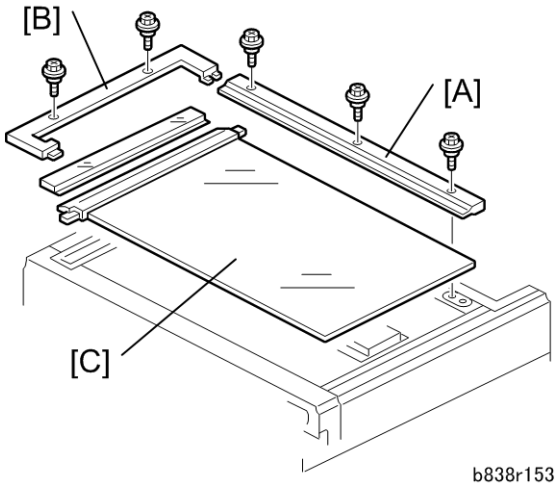

Rear scale [A] (🔩 x 3; stepped screw)

19 Glass cover [B] (🔩 x 2; stepped screw)

20 Exposure glass with the left scale [C]

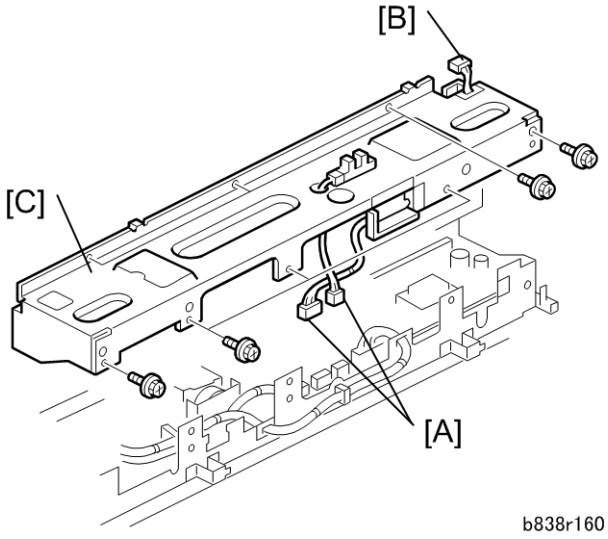

21 Disconnect the connectors [A] (CN312, CN318) from the SIO.

22 Disconnect the scanner HP sensor connector [B].

23 Scanner rear frame [C] (🔩 x 8)

WWW.SERVICE-MANUAL.NET

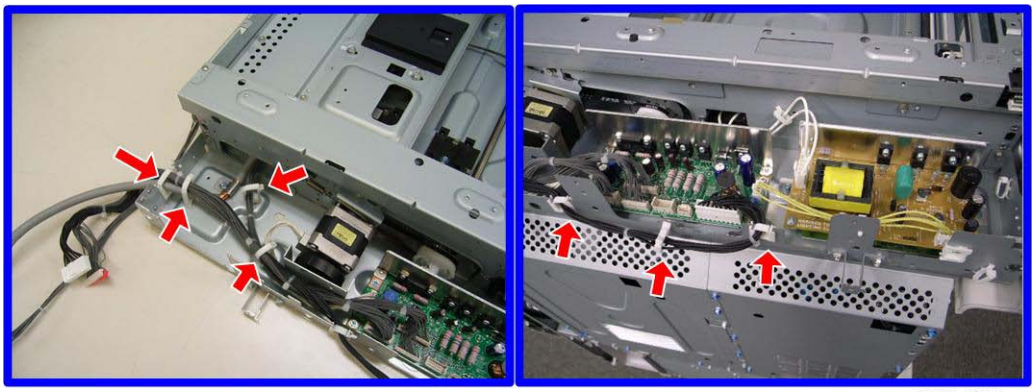

b838r905

24 Release the clamps (🖉 x 7).

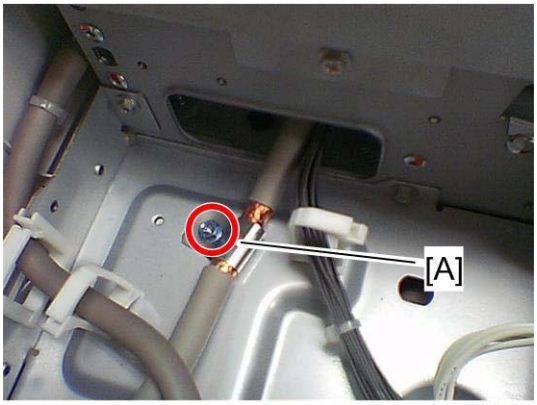

b838r906

25 Remove the clamp [A] for the scanner I/F cable (🖉 x 1). This clamp will be used hereafter.

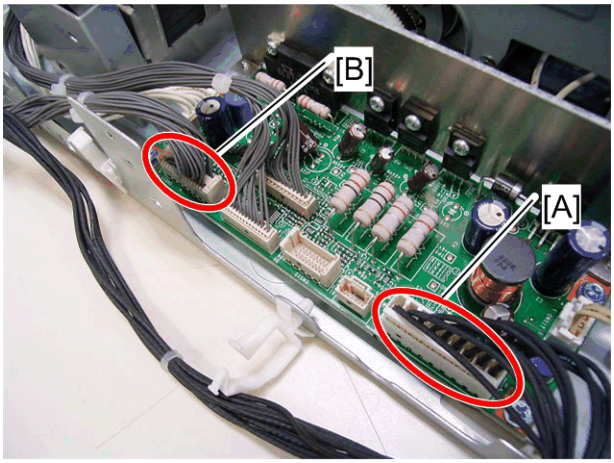

b838r907

26 Disconnect the BICU interface harness [A] (CN310 on the SIO), and then remove it.

27 Disconnect the power supply harness [B] (CN311 on the SIO), and then remove it

WWW.SERVICE-MANUAL.NET

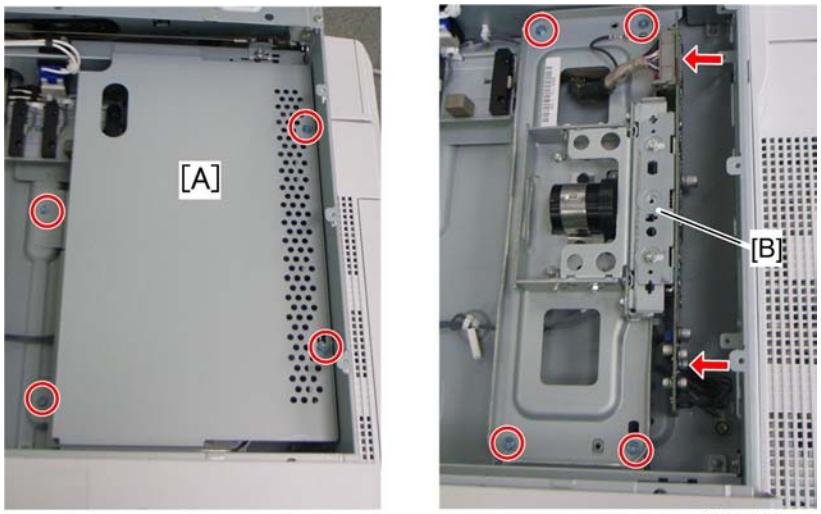

d027r109a

28 SBU cover bracket [A] (🔩 x 4)

29 Sensor board unit [A] (🔩 x 4, 🔌 x 2, ground cable x 1)

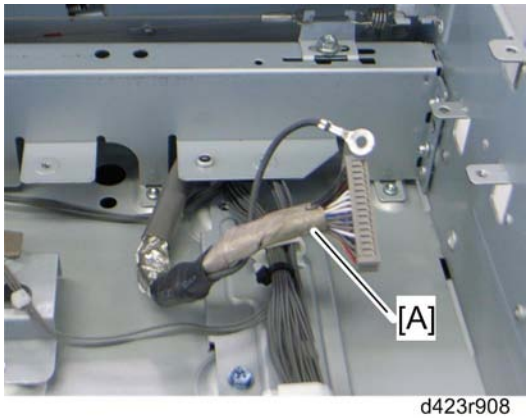

d423r908

30 Scanner I/F cable [A] (🔩 x 1, ground cable x 1)

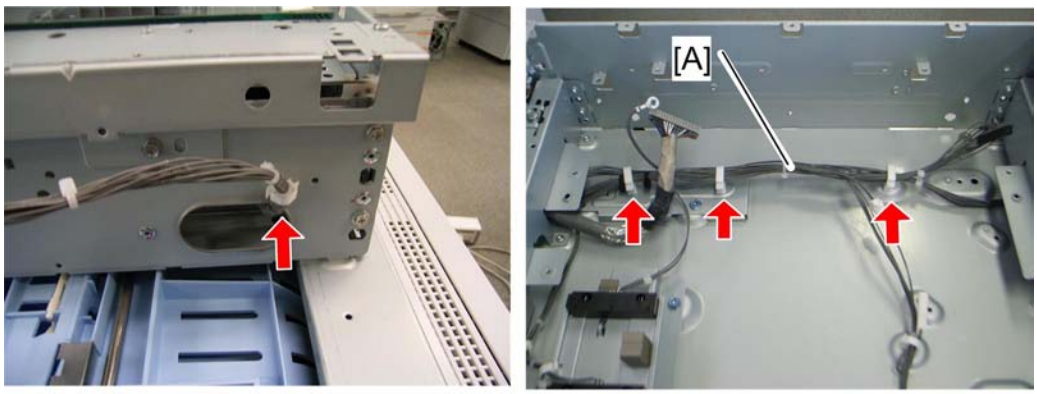

d423r909

31 Operation panel I/F harness [A] (🔌 x 4)

WWW.SERVICE-MANUAL.NET

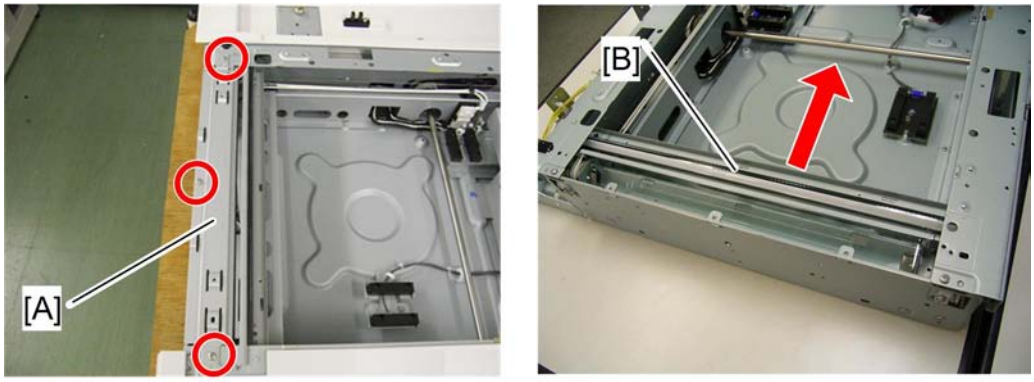

d009r910

32 Scanner left stay [A] (🔩 x 3)

33 Move the scanner carriage [B] to the center position.

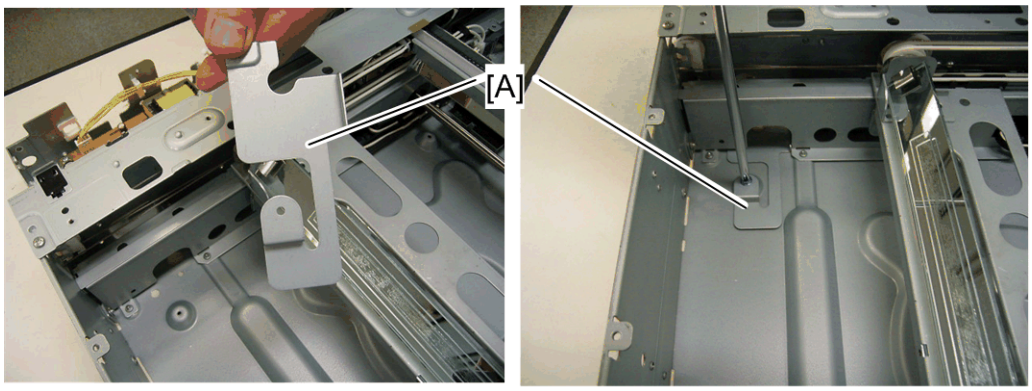

b838r911

34 Install the left bottom plate [A] in the place as shown (🔩 x 1; M3 x 6 blue screw).

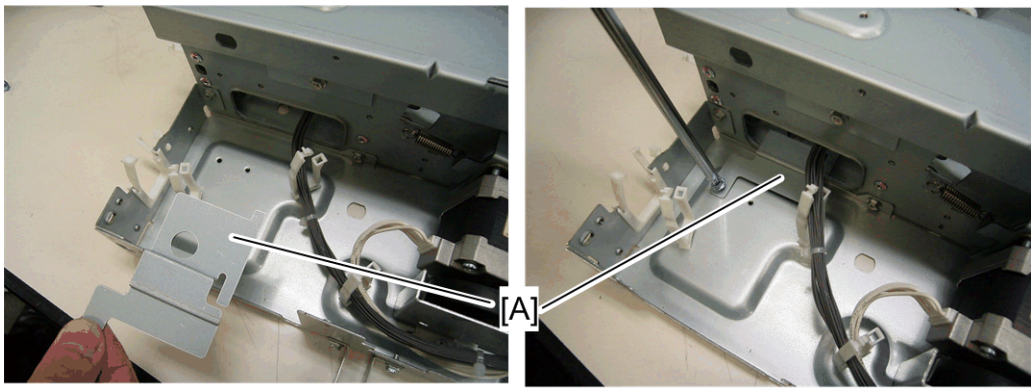

b838r912

35 Install the right bottom plate [A] in the place as shown (🔩 x 1, M3 x 6 blue screw).

WWW.SERVICE-MANUAL.NET

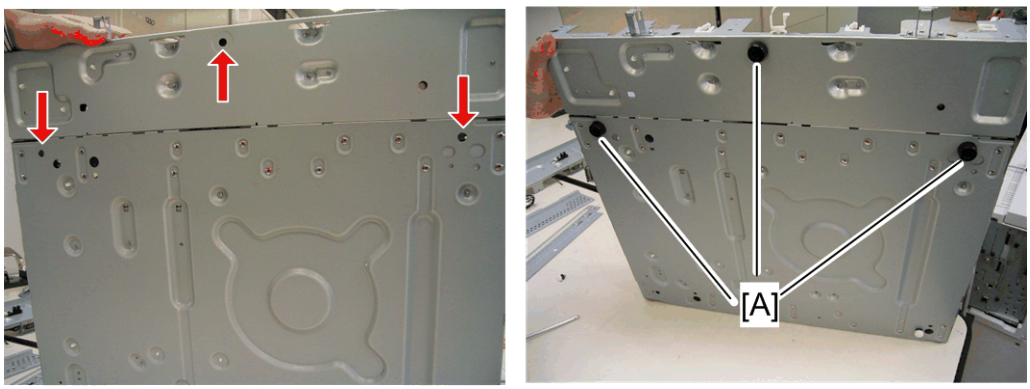

b838r913

36 Install the three rubber legs [A] in the bottom of the scanner unit.

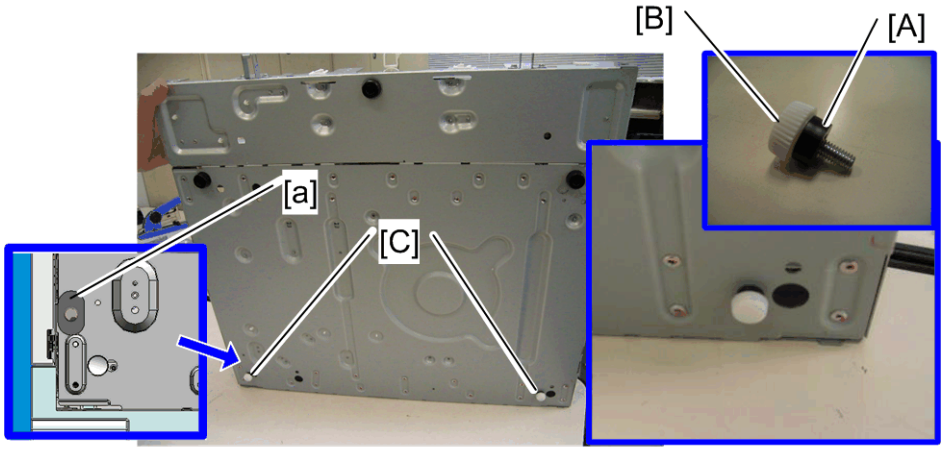

b838r914

37 Install the two spacers [A], adjusters [B] and seal [a] in the bottom [C] of the scanner unit.

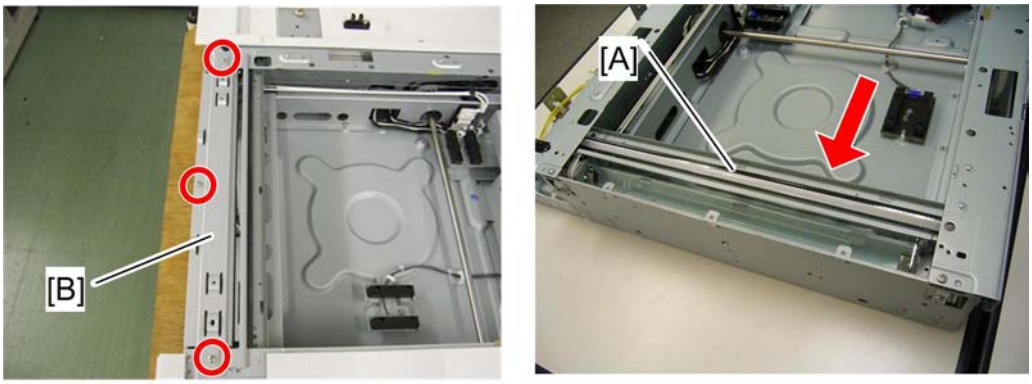

d009r915

38 Move the scanner carriage [A] to its home position.

39 Reinstall the scanner left stay [B] (🔩 x 2).

WWW.SERVICE-MANUAL.NET

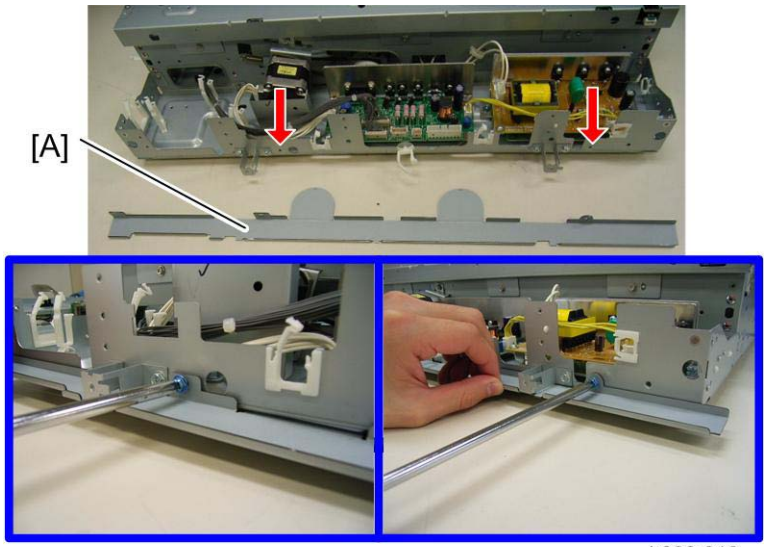

b838r916

40 Install the rear bracket [A] to the outside of the scanner rear frame (🔩 x 2; M3 x 6 blue screw).

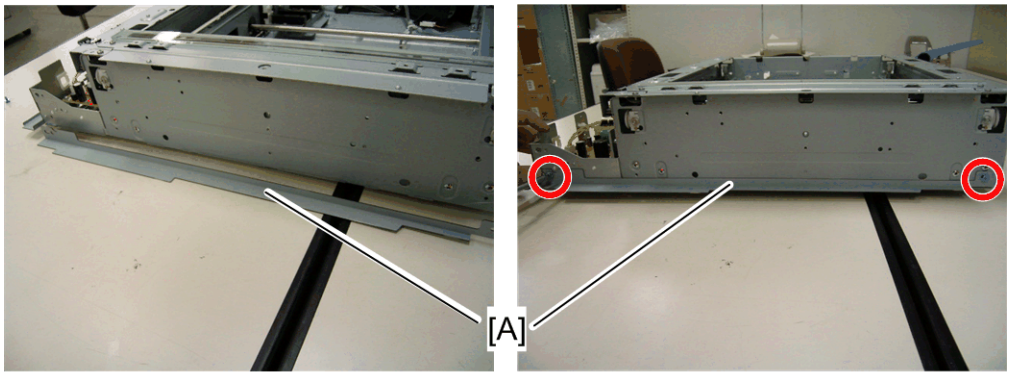

b838r917

41 Install the left bracket [A] to the outside of the scanner left frame (🔩 x 2; M3 x 6 blue screw).

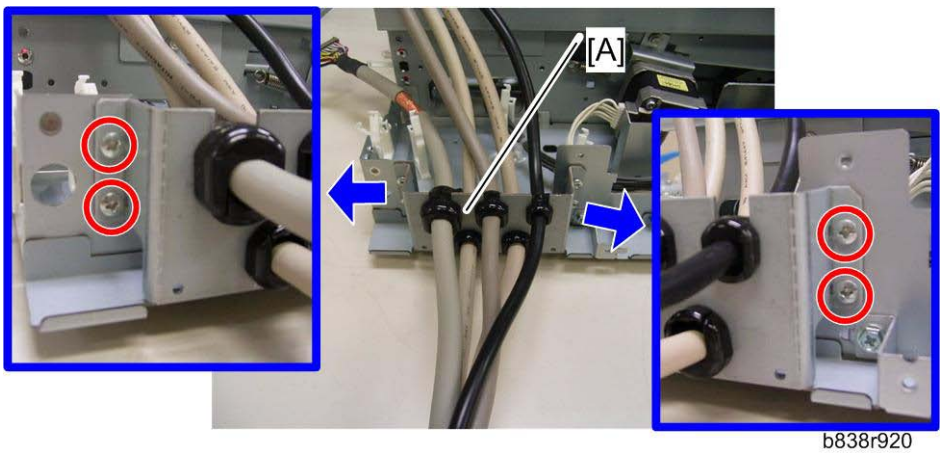

b838r920

42 Attach the cable bracket [A] to the rear right of the scanner unit (🔩 x 4; screw-round M3 x 6).

WWW.SERVICE-MANUAL.NET

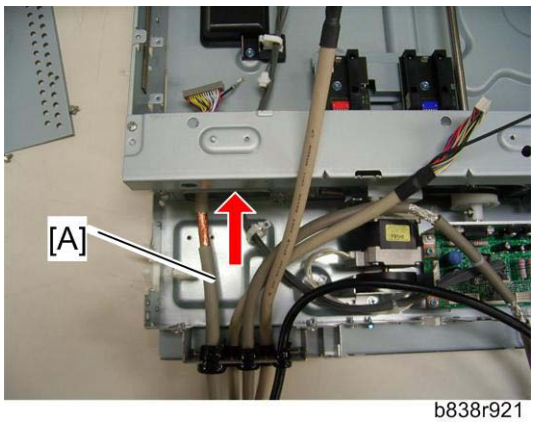

b838r921

43 Put the scanner I/F cable [A] through the cutout of the scanner rear frame.

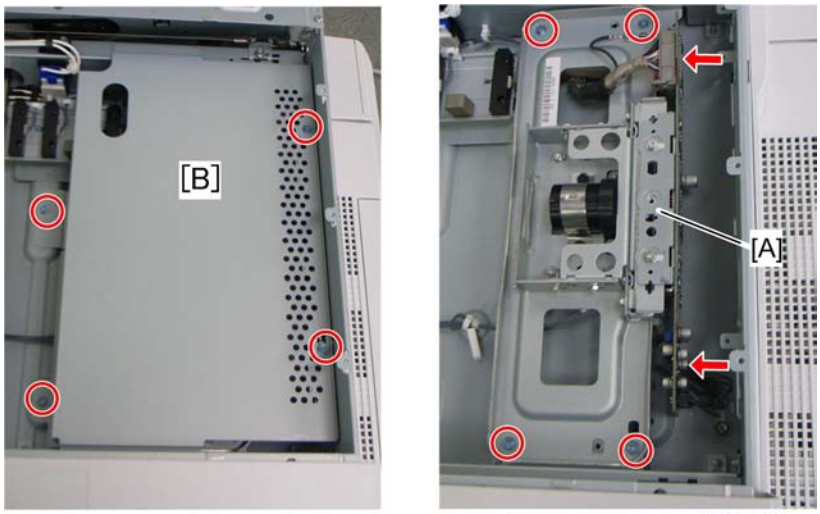

d027r109b

44 Attach the sensor board unit [A] (🔩 x 4, 🖐 x 2, ground cable x 1)

45 Attach the SBU cover bracket [B] (🔩 x 4)

WWW.SERVICE-MANUAL.NET

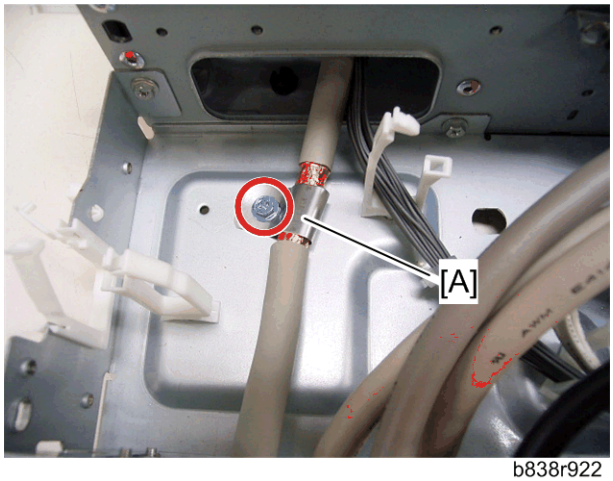

b838r922

46 Remove the wrap on the scanner I/F cable.

47 Attach the clamp [A] (this clamp is removed in step 8 in the "Connecting Procedure for Scanner Unit") to the scanner I/F cable and then secure it (🔩 x 1; M3 x 6 blue screw).

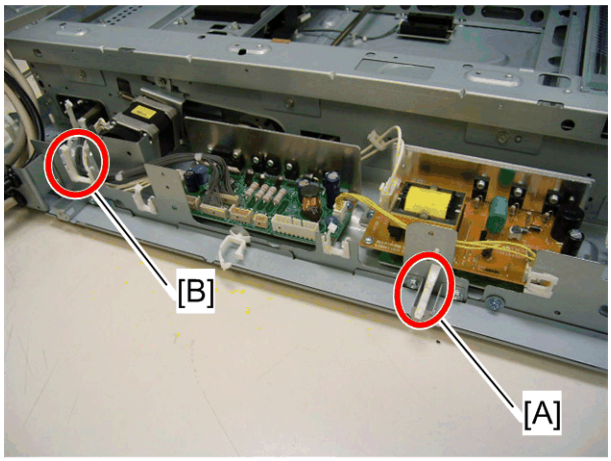

b838r923

48 Install the clamp [A] and saddle clamp [B] as shown (🔩 x 2).

WWW.SERVICE-MANUAL.NET

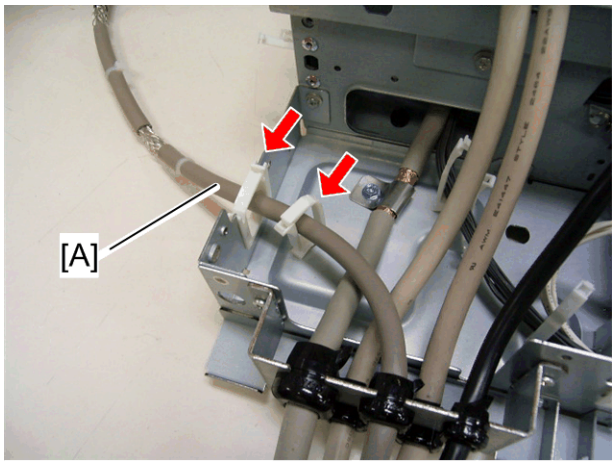

b838r924

49 Route the operation panel I/F cable [A] and clamp it (☞ x 2).

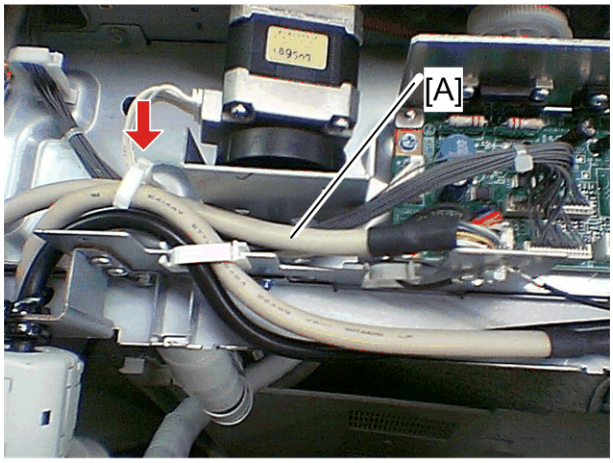

b838r925

50 Route and connect the BICU interface cable [A] to CN311 on the SIO (☞ x 1).

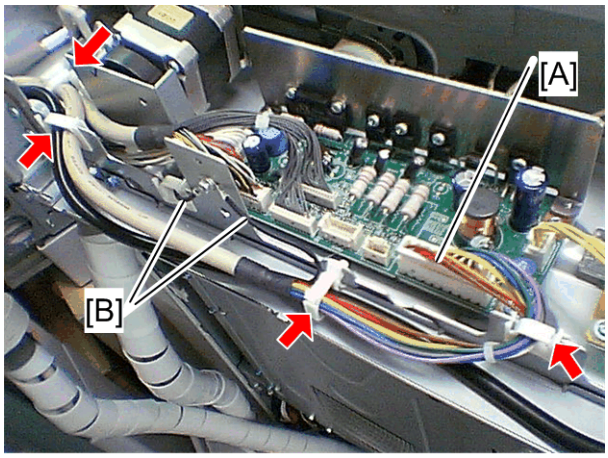

b838r926

51 Route and connect the power supply cable [A] to CN310 on the SIO (☞ x 4).

52 Secure two ground cables [B] (BICU interface cable and power supply cable) (☞ x 1; M3 x 6 blue screw).

WWW.SERVICE-MANUAL.NET

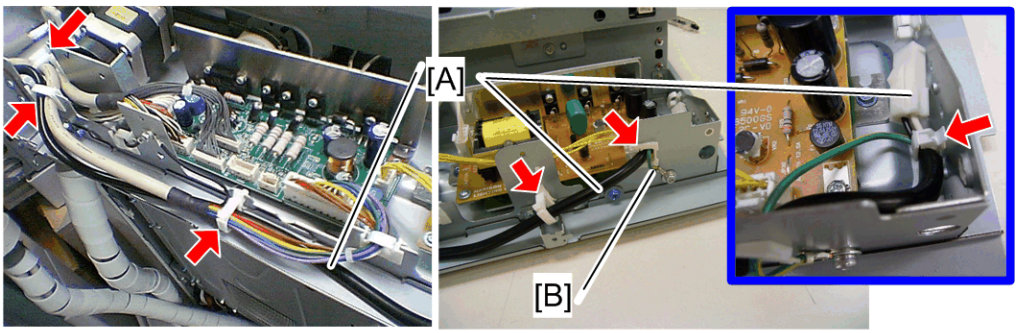

b838r927

53 Route the heater relay cable [A] as shown and secure ground cable [B] (🔩 x 6, 🔩 x 1, screw-round M4 x 8).

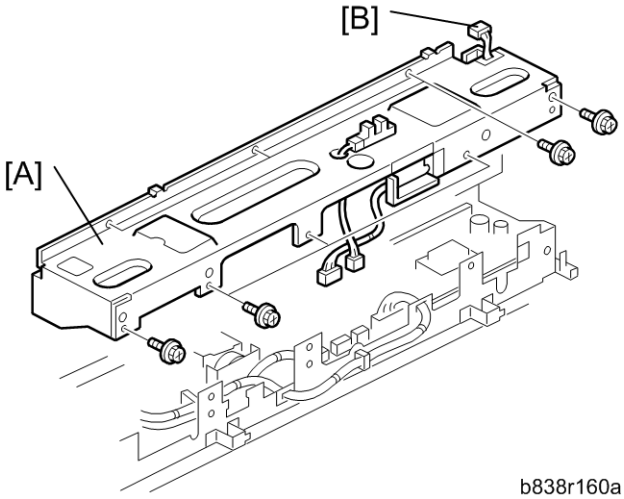

b838r160a

54 Reinstall the scanner rear frame [A] (🔩 x 8, 🔩 x 2).

55 Connect the harness [B] to the scanner HP sensor.

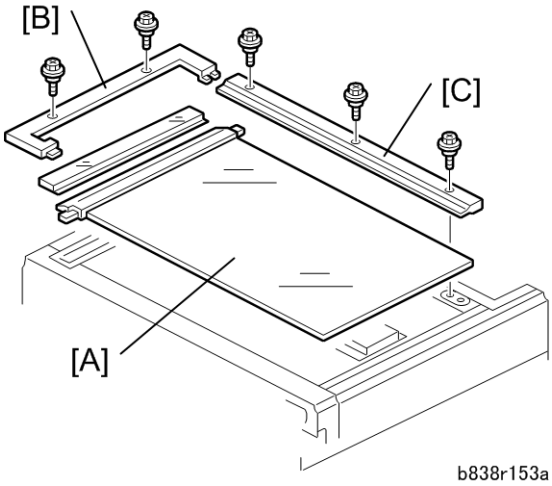

b838r153a

56 Reinstall the exposure glass with left scale [A].

57 Reinstall the glass cover [B] (stepped screw x 2).

58 Reinstall the rear scale [C] (stepped screw x 3).

WWW.SERVICE-MANUAL.NET

Operation Panel

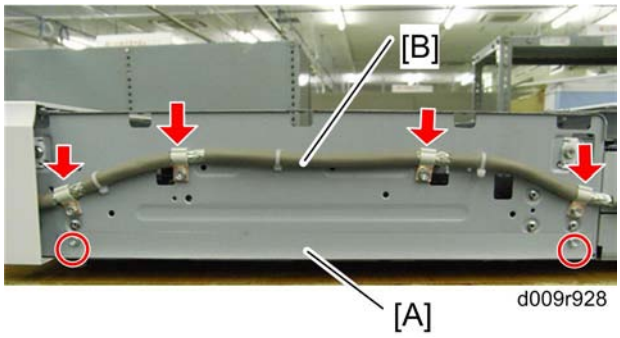

Install the right bracket [A] to the outside of the scanner left frame (🔩 x 2: M3 x 6 blue screw).

Route and attach the operation panel I/F cable [A] to the outside of the scanner right frame with four plate clamps (🔩 x 4).

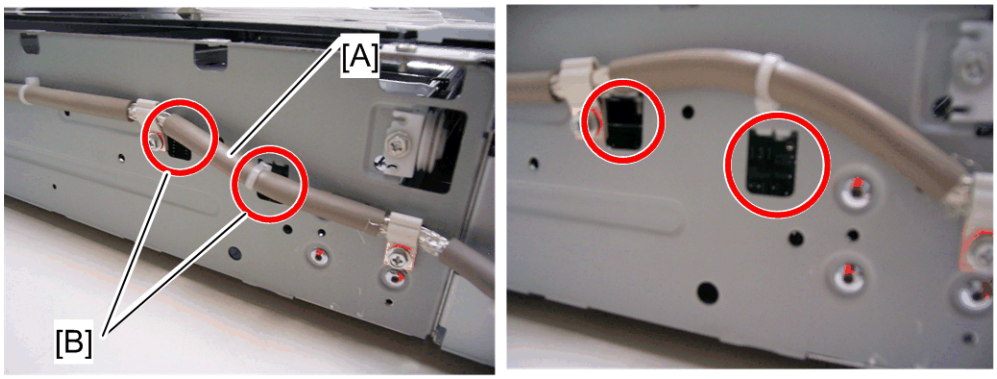

Make sure that the operation panel I/F cable [A] does not cover the three cutouts [B].

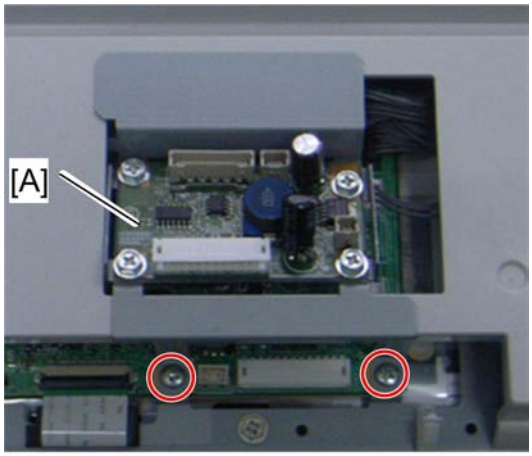

59 Attach the operation panel interface board [A] at the bottom of the operation panel (🔩 x 2).

WWW.SERVICE-MANUAL.NET

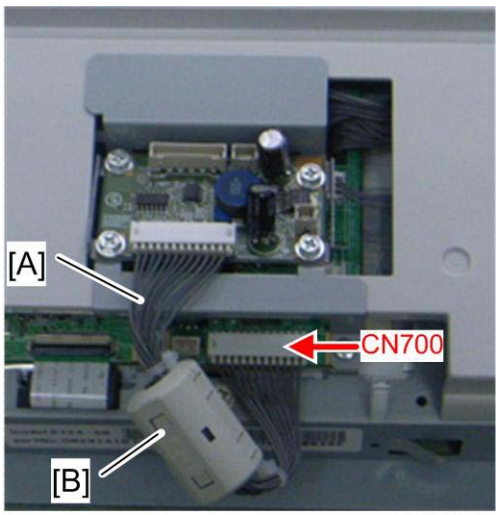

d009r991

60 Connect the harness [A], and then attach the core [B] (RFC-8) as shown above.

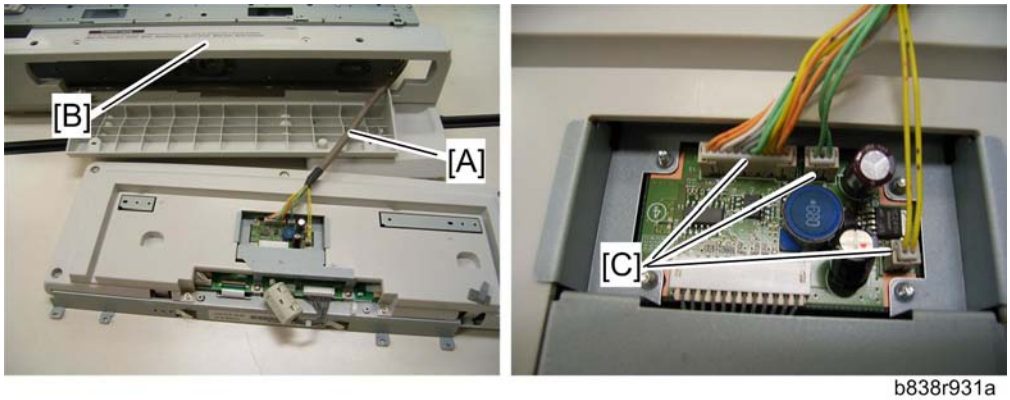

b838r931a

61 Put the operation panel I/F cable [A] through the scanner front cover [B].

62 Connect the three connectors [C] of the operation panel I/F cable to operation panel interface board.

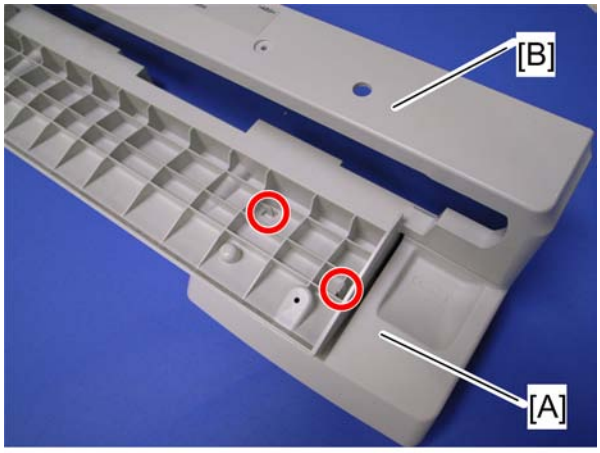

b838r956

63 Remove the clip tray [A] from the scanner front cover [B].

WWW.SERVICE-MANUAL.NET

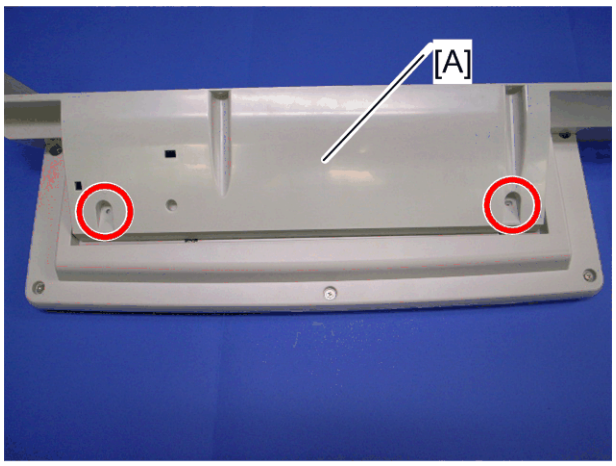

b838r933

64 Attach the scanner front cover [A] to the operation panel (🔩 x 2).

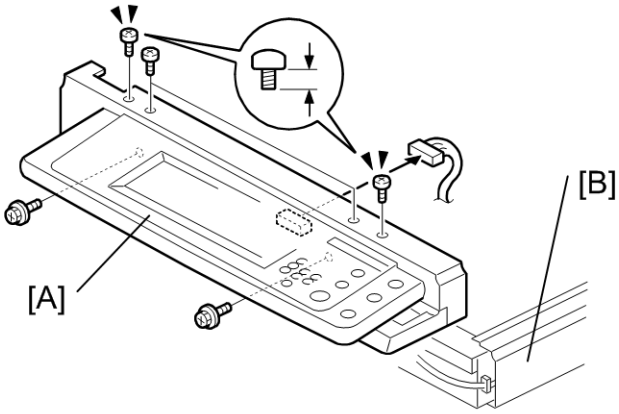

b838r157

65 Reinstall the operation panel with the scanner front cover [A] in the scanner front frame (🔩 x 6; M3 x 3: bind screw x 2, M3 x 5: bind screw x 2 on the top of the scanner front cover, M3 x 8 tapping screw x 2 on the bottom of the scanner front cover).

66 Reinstall the scanner right cover [B] (🔩 x 2).

WWW.SERVICE-MANUAL.NET

Harness Bracket Attachment

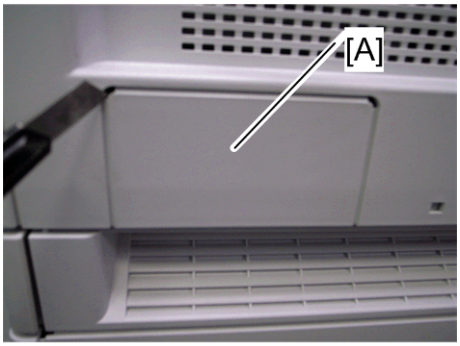

b838r935

Cut off the rear right [A] of the scanner top rear cover with a cutter.

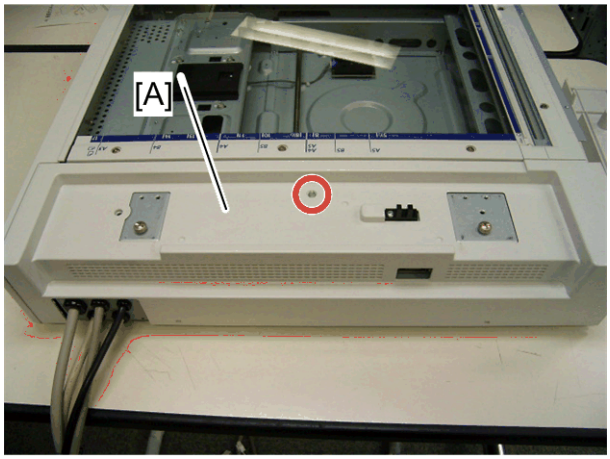

b838r936

67 Reinstall the scanner top rear cover [A] (🔩 x 1; M3 x 8: tapping screw).

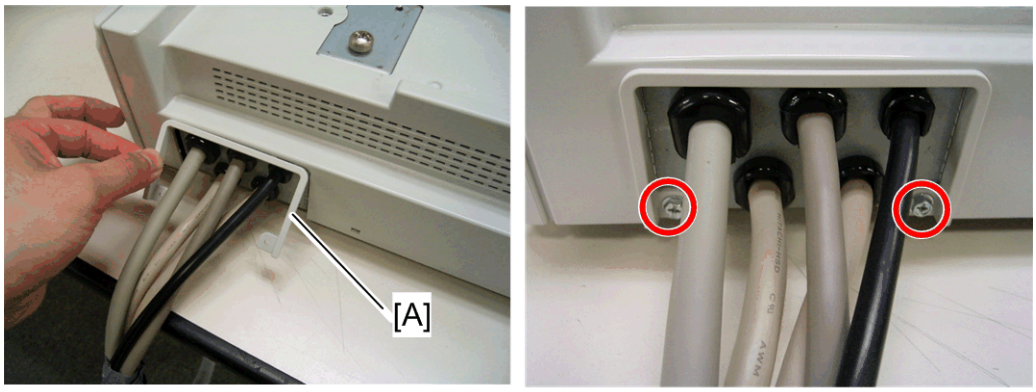

b838r937

68 Install and attach the cable bracket cover [3] (🔩 x 2; M3 x 8 tapping screw).

69 Install the new scanner right cover (No. 14) in the accessories (🔩 x 2; M3 x 8 tapping screw).

WWW.SERVICE-MANUAL.NET

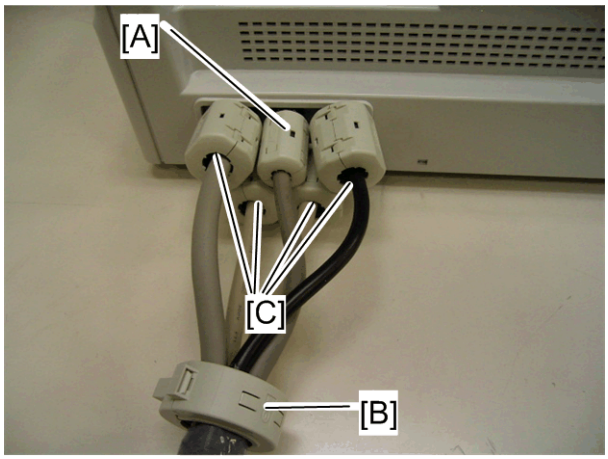

b838r938

70 Install the core [A] (RFC-9) to the operation panel I¥F cable, ring core [B] (TFCM-41-27-16) to the bound cables and the cores [C] (RFC-13) to the other cables.

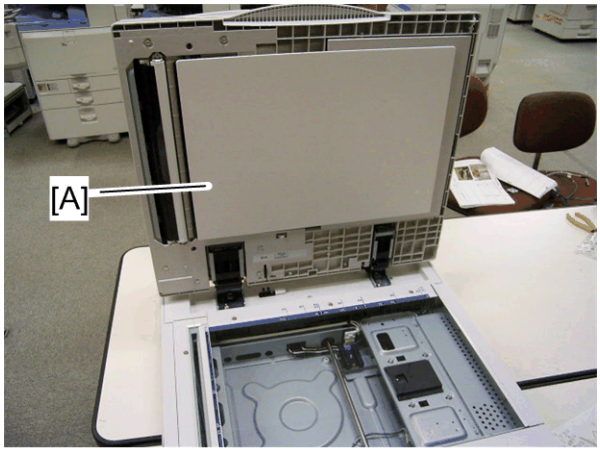

b838r939

71 Install the ARDF [A] or platen cover on the scanner unit (stud screw x 2).

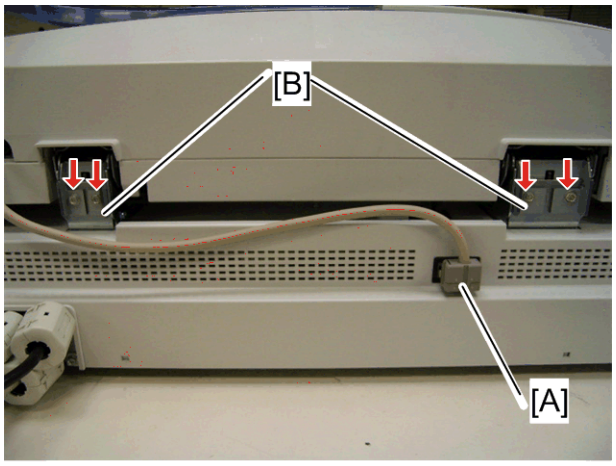

b838r940

72 Connect the ARDF I/F cable [A] to the connector of the scanner unit.

73 Install the right and left stoppers [B] to the ARDF hinges (🔩 x 2 each; M3 x 16 tapping screw).

WWW.SERVICE-MANUAL.NET

Mainframe

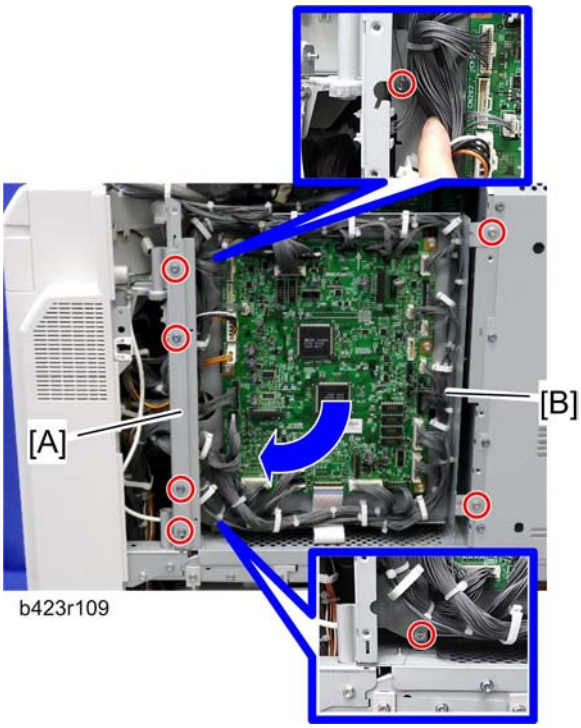

Controller box stay [A] (🔩 x 4)

74 Open the IOB bracket [B] (🔩 x 4, flat cable x 1).

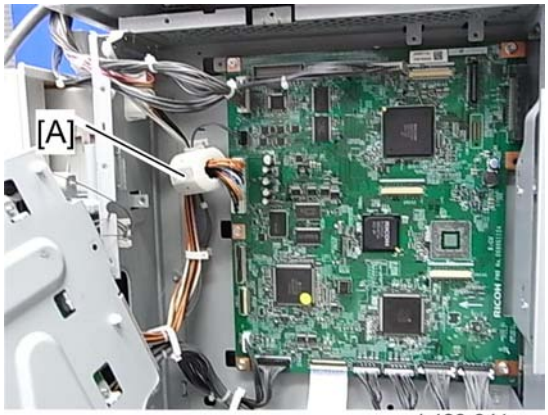

b423r941a

75 Install the core [A] (TFC16816) in the harness of CN110 (on the BICU).

76 Close the IOB bracket.

77 Reinstall the controller box stay.

78 Reconnect the flat cable to CN225 (on the IOB).

WWW.SERVICE-MANUAL.NET

b423r942a

79 Install the core [A] (RFC-5) in the harnesses of CN201 (on the IOB).

b838r943a

80 Install the core [A] (RFC-13) in the power supply cables on the IH inverter.

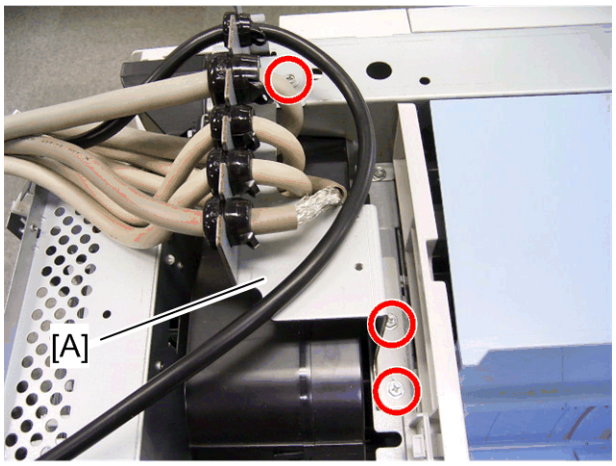

b838r944

81 Install the cable bracket [A] in the rear frame of the mainframe (🔩 x 3, M3 x 6 tapping screw).

WWW.SERVICE-MANUAL.NET

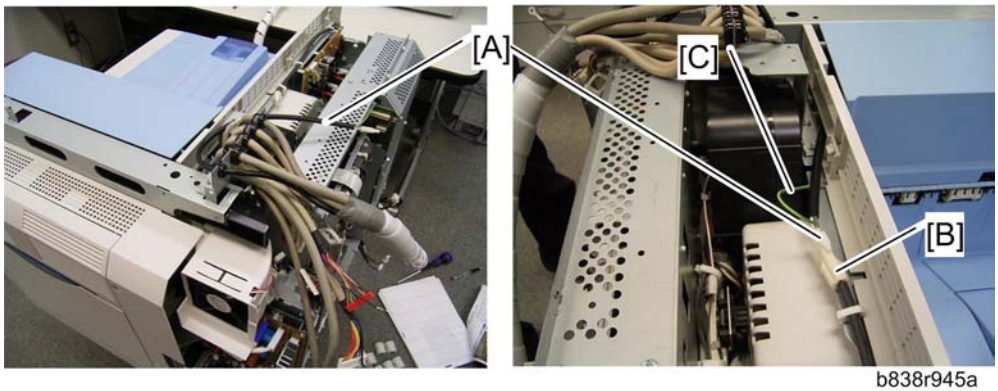

b838r945a

82 Route and connect the heater relay cable [A] to the heater cable [B] (x 1).

83 Secure the ground cable of the heater relay cable [C] (x 1: round screw M4 x 8).

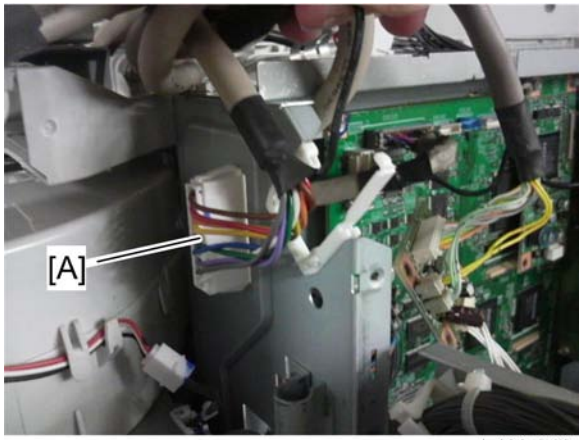

b423r946

84 Connect the 9-pin connector [A] to the connector on the controller.

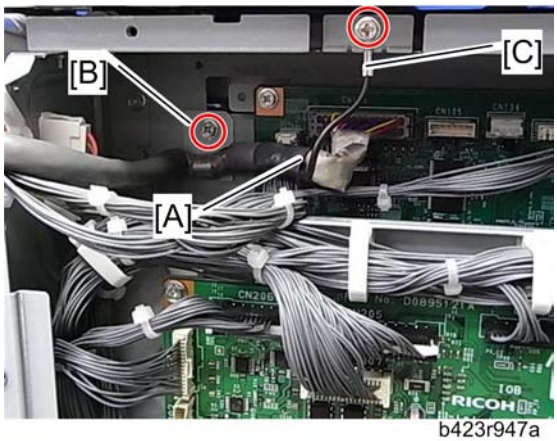

b423r947a

85 Route the scanner I/F cable [A] and connect it to CN103 (on the BICU) (x 1).

86 Secure the scanner I/F cable with the clamp [B] (x 1; M3 x 6 tapping screw) and the ground cable [C] (x 1; M3 x 6 tapping screw).

WWW.SERVICE-MANUAL.NET

Note

Push firmly the scanner cable into the connector to prevent the interference of the cable and the controller box.

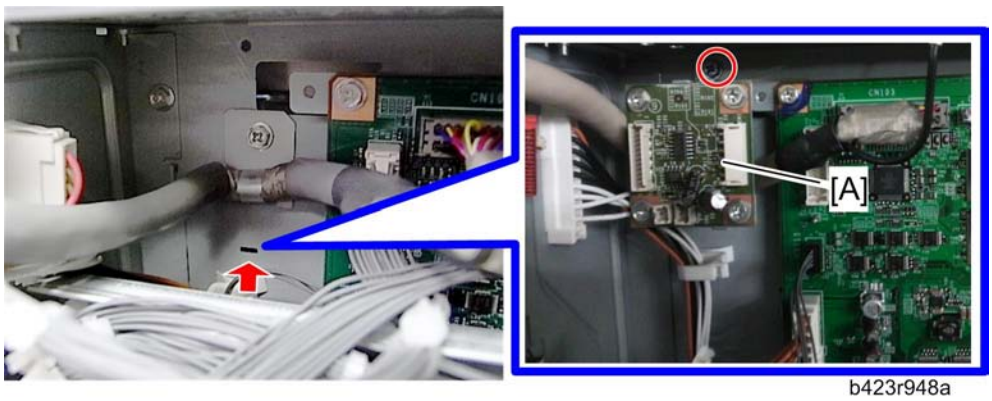

b423r948a

87 Install the MB interface board [A] (🔩 x 1; M3 x 6 tapping screw).

88 Connect the operation panel I/F cable to the CN2, CN5 and CN6 on the MB interface board and clamp it (🗜 x 1).

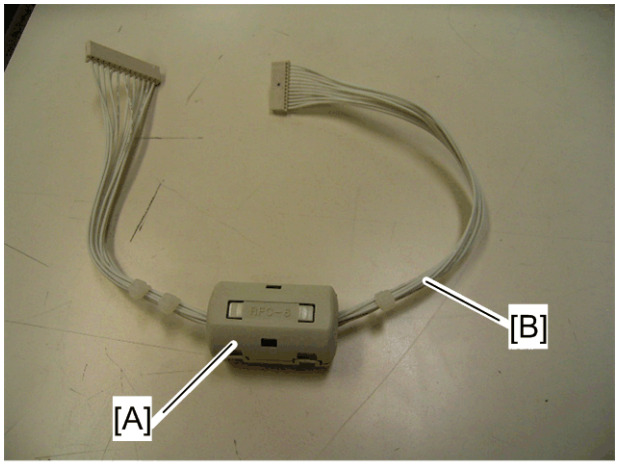

b838r949

89 Install the core [A] (RFC-8) in between binds on the long relay harness [B].

WWW.SERVICE-MANUAL.NET

b423r950

90 Connect the two binds connector [A] of the long relay harness to the CN1 on the MB interface board.

91 Connect the one bind connector [B] of the long relay harness to the CN104 on the BICU.

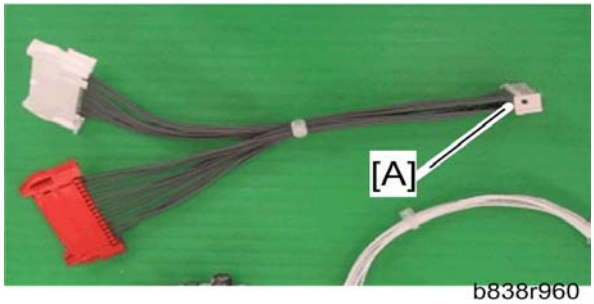

b838r960

92 Set the connector [A] of two two-in-one harness to CN101 (on the BICU).

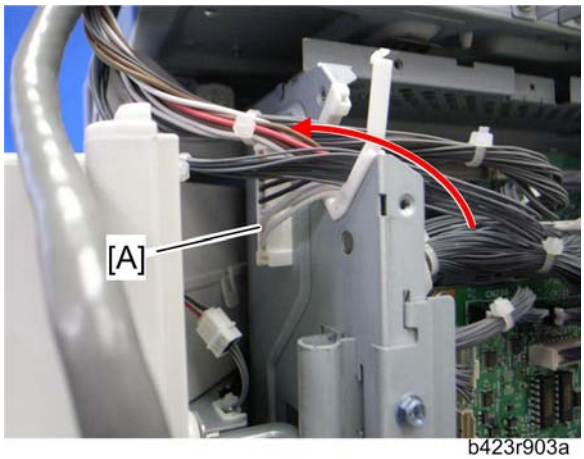

b423r903a

93 Route the two-in-one harness as shown above.

WWW.SERVICE-MANUAL.NET

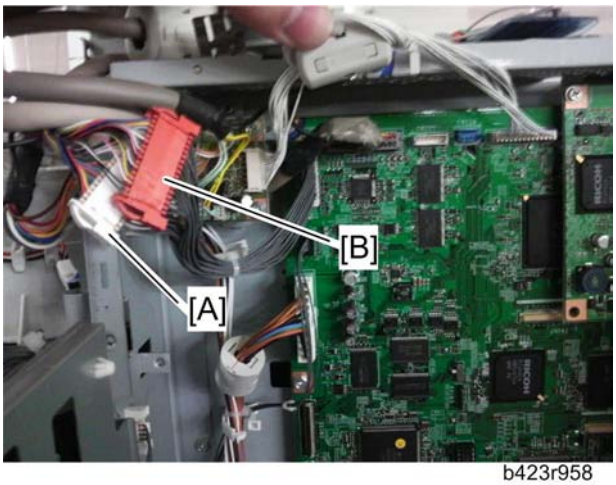

b423r958

94 Connect two connectors (white [A] and red [B]) to connectors of the two-in-one harness from the CN101 on the BICU (x 1).

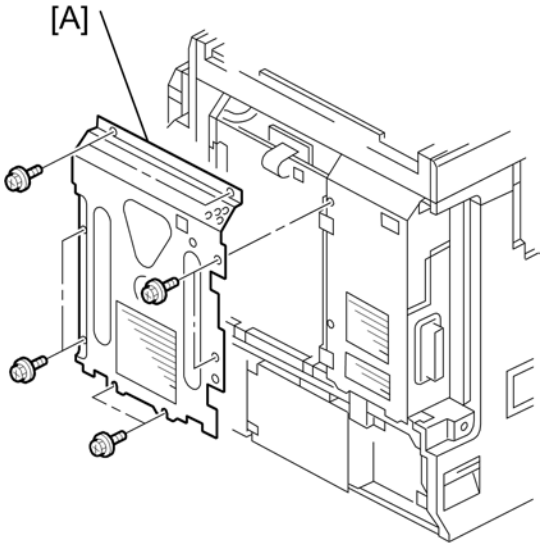

b838r107

95 Reinstall the controller box right cover [A] (x 8)

WWW.SERVICE-MANUAL.NET

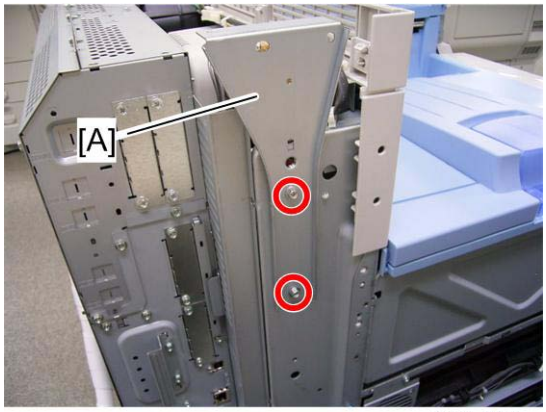

b838r951

96 Install the left scanner stay [A] (🔩 x 2; M4 x 6 tapping screw) in the left side of the main machine.

97 Reinstall the left cover (🔩 x 6).

98 Reinstall the left rear cover (🔩 x 1).

99 Reinstall the right top cover (🔩 x 1).

100 Reinstall the rear cover (🔩 x 6).

Note

If you install the key counter, first refer to the "**Installation for Key Counter**".

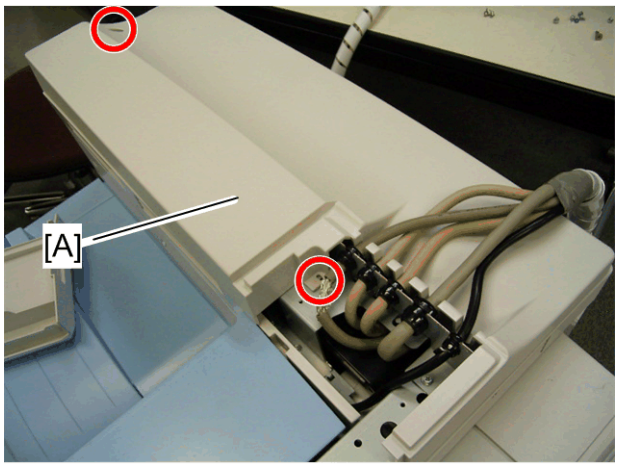

b838r952

101 Install the top rear cover [A] (🔩 x 2; M3 x 8 tapping screw).

WWW.SERVICE-MANUAL.NET

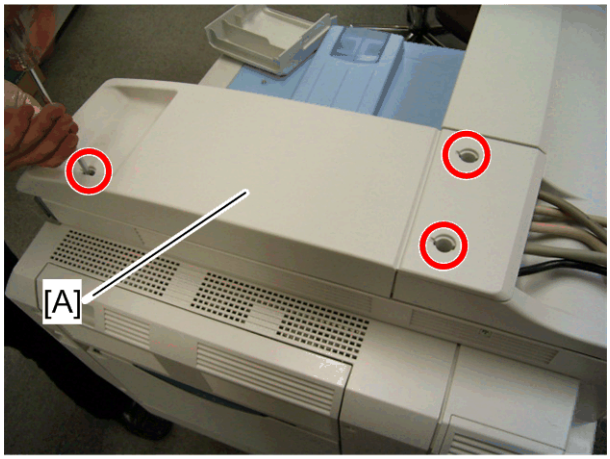

b838r953

102 Install the top right cover [A] ✐ x 3; M3 x 8 tapping screw).

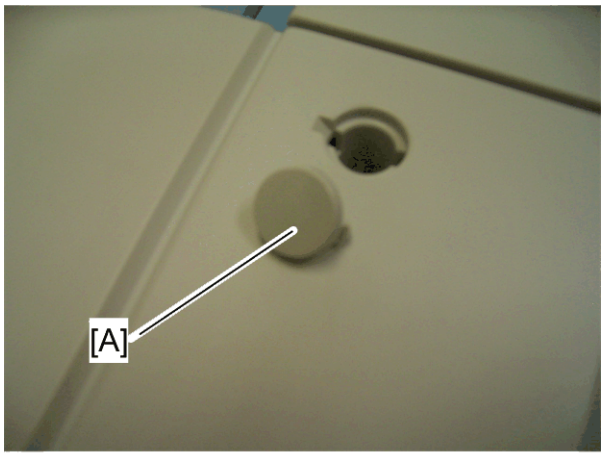

b838r954

103 Attach the three caps [A] to the screw holes on the top right cover.

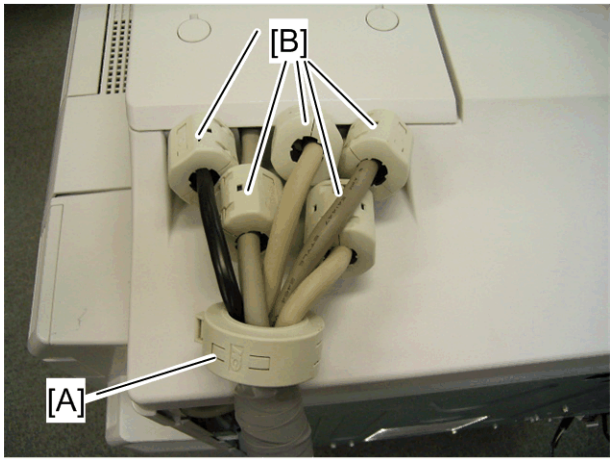

b838r955

104 Install the ring core [A] (TFCM-41-27-16) to the bound cables and the cores [B] (RFC-13) to the other cables.

WWW.SERVICE-MANUAL.NET

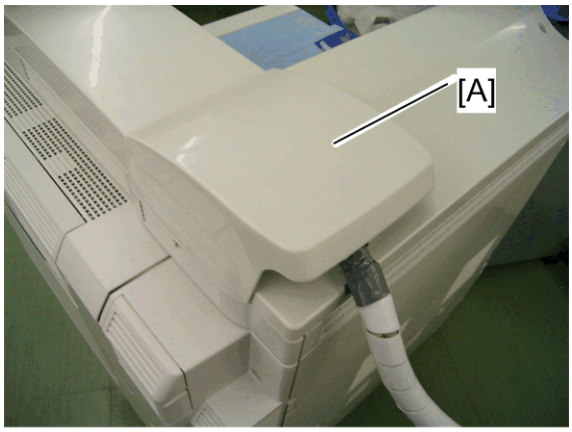

b838r957

105 Install the cable cover [A] in the top rear cover.

106 Follow the "**Installation Requirements**" to place the scanner accessibility unit for safety.

107 After installation, adjust the scanner image.(* "Copy Adjustment" > "Scanning" in the chapter "Replacement and Adjustment" of the Field Service Manual)

WWW.SERVICE-MANUAL.NET

Installation for Key Counter

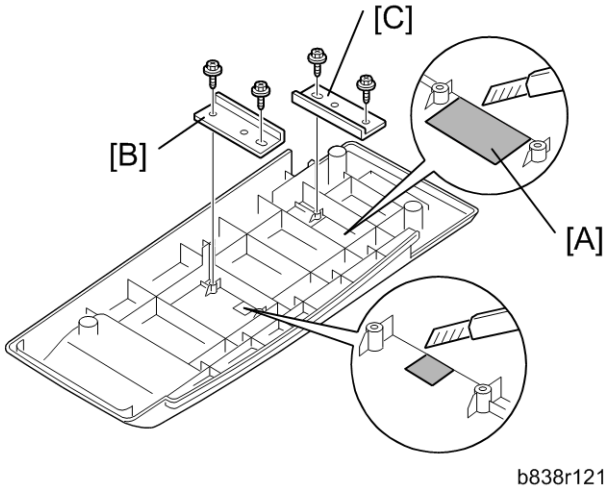

Cut off and remove the parts [A] with a cutter.

108 Attach the key counter front bracket [B] and rear bracket [C] to the reverse side of the top right cover.

109 Put the key counter harness into the machine.

110 Connect the key counter harness to the connector of the right side of the controller box.

111 Install the top rear cover (* "Connecting Procedure for Mainframe")

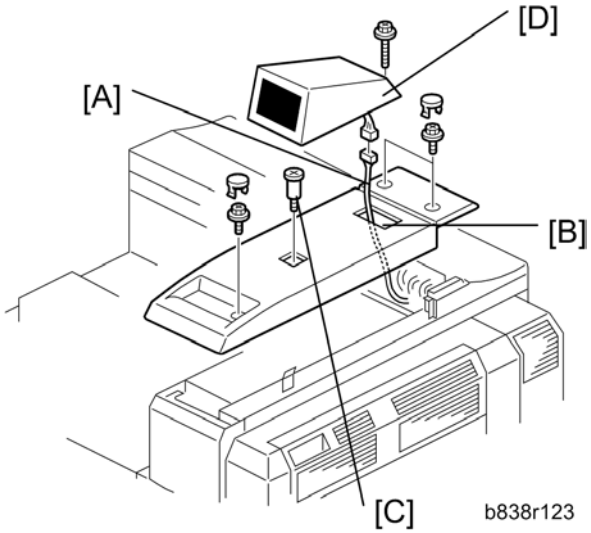

112 Put the key counter harness [A] through the cut out [B].

WWW.SERVICE-MANUAL.NET

113 Install the top right cover in the machine and attach the caps to the screw holes (steps 30 and 31 in "Mainframe").

114 Install the stud screw [C].

115 Install the key counter [D] (x 1, x 1).

For details about installing the key counter, refer to the "Field **Service Manual for D088/D089**".

WWW.SERVICE-MANUAL.NET

WWW.SERVICE-MANUAL.NET

PREVENTIVE MAINTENANCE

REVISION HISTORY		
Page	**Date**	**Added/Updated/New**
		None

WWW.SERVICE-MANUAL.NET

WWW.SERVICE-MANUAL.NET

3. PREVENTIVE MAINTENANCE

3.1 MAINTENANCE TABLES

See "Appendices" for the following information:

- Preventive Maintenance Items
- Other Yield Parts

WWW.SERVICE-MANUAL.NET

3.2 PM PARTS SETTINGS

3.2.1 BEFORE REMOVING THE OLD PM PARTS

1. Enter the SP mode.
2. Output the SMC logging data with SP5-990-004.
3. Set the following SPs to "1" before you turn the power off. Then, the machine will reset the PM counters automatically. In the case of developer, the developer initialization will also be done automatically.
4. Exit the SP mode.

Item	SP
Developer	Black: 3902-005 Yellow: 3902-006 Cyan: 3902-007 Magenta: 3902-008
Drum Unit	Black: 3902-009 Yellow: 3902-010 Cyan: 3902-011 Magenta: 3902-012
Heating Roller and Pressure Roller (not necessary for complete fusing units; see below)	Heating roller: 3902-018 (See "Important" below.) Pressure roller: 3902-019
Image Transfer Belt Cleaning Unit	3902-015
PTR Unit	3902-016
Toner Collection Bottle (if not full or near-full)	3902-017

WWW.SERVICE-MANUAL.NET

Important

- After the PM counter for the heating roller reaches its PM life (300K pages), the machine stops the operation automatically. Replace the heating roller before the machine stops its operation (stop warning: 315K pages, stop: 330K pages).
- Change the setting of SP3-902-018 from "0" to "1" before replacing the heating roller. Otherwise, the machine will not recover.

For the following units, there is a new unit detection mechanism. It is not necessary to reset PM counters.

- PCDU
- Development unit
- Toner Collection Bottle (if full or near-full)
- Fusing unit

3.2.2 AFTER INSTALLING THE NEW PM PARTS

1. Turn on the main power switch.
2. Output the SMC logging data with SP5-990-004 and check the counter values.
3. Make sure that the PM counters for the replaced units are "0" with SP7-803. If the PM counter for a unit was not reset, then reset that counter with SP 7-804.
4. Make sure that the exchange counter counts up with SP7-853.
5. Make sure that the counters for the previous units (SP7-906) on the new SMC logging data list (from step 2 above) are equal to the counters (SP7-803) for these units on the previous SMC logging data list (the list that was output in the "Before removing the old parts" section).
6. Make sure that the unit replacement date is updated with SP7-950.

WWW.SERVICE-MANUAL.NET

3.2.3 PREPARATION BEFORE OPERATION CHECK

1. Clean the exposure glasses (for DF and book scanning).
2. Enter the user tools mode.
3. Do the "Automatic Color Calibration(ACC)" for the copier mode & printer mode as follows:
   - Print the ACC test pattern (User Tools > Maintenance > ACC > Start).
   - Put the printout on the exposure glass.
   - Put 10 sheets of white paper on the test chart. This ensures the precise ACC adjustment.
   - Close the ARDF or the platen cover.
   - Press "Start Scanning" on the LCD. Then, the machine starts the ACC.
4. Exit the User Tools mode, and then enter the SP mode.
5. Do the "Forced line position adjustment" as follows.
   - First do SP2-111-3 (Mode c).
   - Then do SP2-111-1 (Mode a).
   - To check if SP 2-111-1 was successful, watch the screen during the process. A message is displayed at the end. Also, you can check the result with SP 2-194-10 to -12.
6. Exit the SP mode.

3.2.4 OPERATION CHECK

Check if the sample image has been copied normally.

WWW.SERVICE-MANUAL.NET

REPLACEMENT AND ADJUSTMENT

REVISION HISTORY		
Page	**Date**	**Added/Updated/New**
157 ~ 158	3/3/2011	NVRAM on the Controller Board.

WWW.SERVICE-MANUAL.NET

WWW.SERVICE-MANUAL.NET

4. REPLACEMENT AND ADJUSTMENT

4.1 BEFOREHAND

CAUTION

- Before installing options, please do the following:
- If there is a fax unit in the machine, print out all messages stored in the memory, the lists of user-programmed items, and the system parameter list.
- If there are printer jobs in the machine, print out all jobs in the printer buffer.
- Turn off the main switch and disconnect the power cord, the telephone line, and the network cable.

Important

- Always touch a grounded surface to discharge static electricity from your hands before you handle SD cards, printed circuit boards, or memory boards.

WWW.SERVICE-MANUAL.NET

4.2 SPECIAL TOOLS

Part Number	Description	Q'ty
B645 5010	SD Card	1
B645 6705	PCMCIA Card Adapter	1
B645 6820	USB Reader/Writer	1
VSSM9000	Digital Multimeter – FLUKE87	1
G021 9350	Loop-back Connector – Parallel *NOTE	1
C401 9503	20X Magnification Scope	1
A257 9300	Grease Barrierta – S552R	1
5203 9502	Silicone Grease G-501	1
A092 9503	C4 Color Test Chart (3 pcs/set)	1
A184 9501	Optics Adjustment Tool (2 pcs / set)	2
B679 5100	Plug - IEEE1284 Type A	1
B132 9700	Lubricant Powder	1

Note

- The "Loop-back Connector–Parallel" requires the "Plug-IEEE1284 Type A", and the optional IEEE1284 interface option must also be installed.

WWW.SERVICE-MANUAL.NET

4.3 IMAGE ADJUSTMENT

4.3.1 SCANNING

Check the printing registration/side-to-side adjustment and the blank margin adjustment before you do the following scanner adjustments.

Note

- Use S-2-1 test chart to do the following adjustments.

Scanner sub-scan magnification

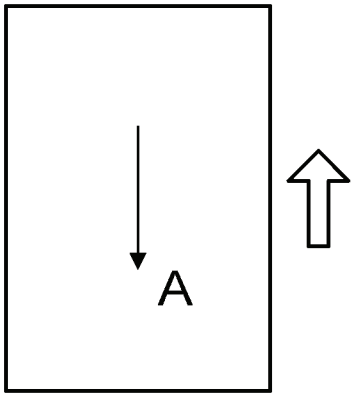

A: Sub-scan magnification

1. Put the test chart on the exposure glass. Then make a copy from one of the feed stations.
2. Check the magnification ratio. Adjust with SP4-008 if necessary.
   Standard: ±1.0%.

WWW.SERVICE-MANUAL.NET

Scanner leading edge and side-to-side registration

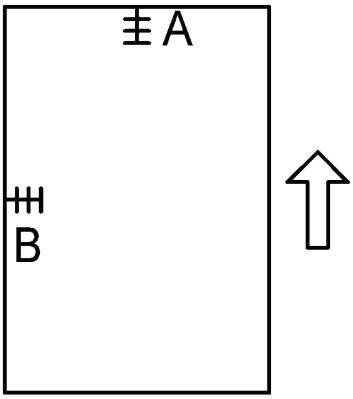

A: Leading Edge Registration

1. Put the test chart on the exposure glass. Then make a copy from one of the feed stations.
2. Check the leading edge and side-to-side registration. Adjust the following SP modes if necessary.
   Standard: 0 ± 2mm for the leading edge registration, 0 ± 2.5mm for the side-to-side registration.

	SP mode
Leading Edge Registration	SP4-010-001
Side-to-Side Registration	SP4-011-001

WWW.SERVICE-MANUAL.NET

4.3.2 ARDF

ARDF side-to-side, leading edge registration and trailing edge

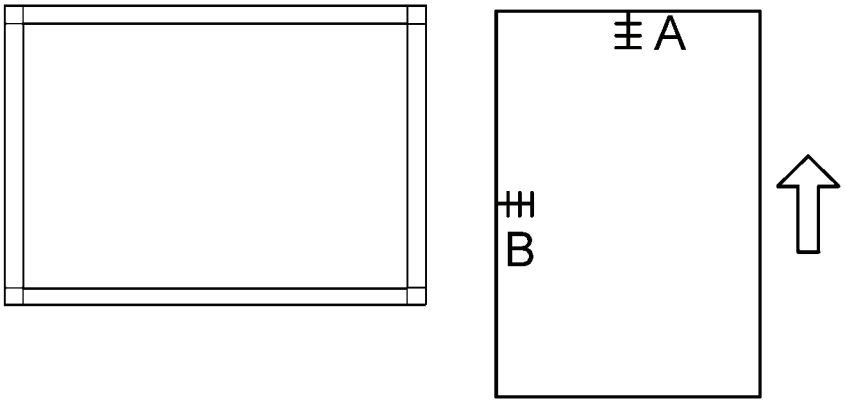

A: Leading edge registration

Use A3/DLT paper to make a temporary test chart as shown above.

1. Put the temporary test chart on the ARDF. Then make a copy from one of the feed stations.
2. Check the registration. Check the leading edge and side-to-side registration. Adjust the following SP modes if necessary.
   Standard: 4.2 ± 2 mm for the leading edge registration, 2 ± 1 mm for the side-to-side registration. Use the following SP modes to adjust if necessary.

SP Code	What It Does	Adjustment Range
SP6-006-001	Side-to-Side Regist: Front	± 3.0 mm
SP6-006-003	Leading Edge Registration	± 5.0 mm
SP6-006-005	Buckle: Duplex Front	± 3.0 mm
SP6-006-006	Buckle: Duplex Rear	± 2.5 mm
SP6-006-007	Rear Edge Erase (Trailing Edge)	± 10.0 mm

WWW.SERVICE-MANUAL.NET

ARDF sub-scan magnification

1. Put the temporary test chart on the ARDF. Then make a copy from one of the feed stations.
2. Check the magnification ratio. Adjust with SP6-017-001 if necessary.
   - Standard: ±5.0%
   - Reduction mode: ±1.0%
   - Enlargement mode: ±1.0%

4.3.3 REGISTRATION

Image Area

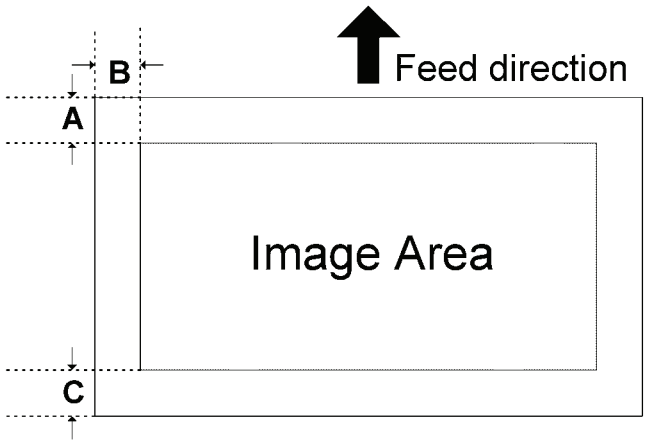

A = C = 5.2 mm (0.2"), B = 2.0 mm

Make sure that the registration is adjusted within the adjustment standard range as shown below.

Leading Edge

Adjusts the leading edge registration for each paper type and process line speed.

Side to Side

Adjusts the side-to-side registration for each paper feed station. Use SP mode (SP1-002) to adjust the side-to-side registration for the optional paper feed unit, LCT, and duplex unit.

Adjustment Standard

- Leading edge (sub-scan direction): 5.2 ± 2 mm
- Side to side (main-scan direction): 2 ± 1 mm

WWW.SERVICE-MANUAL.NET

Paper Registration Standard

The registration in both main- and sub-scan directions can change within the following tolerance.

- Sub-scan direction: 0 ± 9 mm
- Main-scan direction: 0 ± 4 mm

Adjustment Procedure

1. Enter SP2-109-003.
2. Print out the test pattern (14: 1-dot trimming pattern) with SP2-109-003.

   Note

   - Registration can change slightly as shown on the previous page. Print some pages of the 1-dot trimming pattern for step 3 and 4. Then average the leading edge and side-to-side registration values, and adjust each SP mode.
3. Do the leading edge registration adjustment.
   1) Check the leading edge registration and adjust it with SP1-001.
   2) Select the adjustment conditions (paper type and process line speed).
   3) Input the value. Then press the # key.
   4) Generate a trim pattern to check the leading edge adjustment.
4. Do the side-to-side registration adjustment.
   1) Check the side-to-side registration and adjust it with SP1-002.
   2) Select the adjustment conditions (paper feed station).
   3) Input the value. Then press the # key.
   4) Generate a trim pattern to check the leading edge adjustment.

WWW.SERVICE-MANUAL.NET

4.3.4 ERASE MARGIN ADJUSTMENT

Note

- Adjust the erase margin C and D only if the registration (main scan and sub scan) cannot be adjusted within the standard values. Do the registration adjustment after adjusting the erase margin C and D, and then adjust the erase margin A and B.

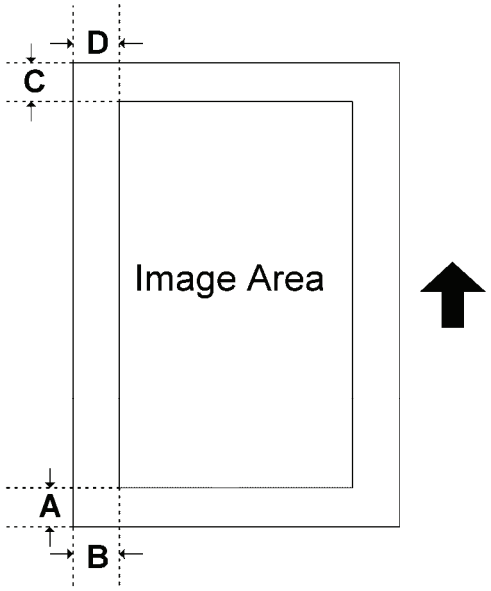

1. Enter SP2-109-003.
2. Print out the test pattern (14: 1-dot trimming pattern) with SP2-109-003.
3. Check the erase margin A and B. Adjust them with SP2-103-001 to -015 if necessary.
   - Leading edge: 0.0 to 9.0 mm (default: 4.2 mm)
   - Side-to-side: 0.0 to 9.0 mm (default: 2.0 mm)
   - Trailing edge: 0.0 to 9.0 mm (default: 4.2 mm)

WWW.SERVICE-MANUAL.NET

4.3.5 COLOR REGISTRATION

Line Position Adjustment

The automatic line position adjustment usually is done for a specified condition to get the best color prints.

Do the following if color registration shifts:

- Do "Auto Color Registration" as follows to do the forced line position adjustment.

1. First do SP2-111-3.
2. Then do SP2-111-1.

   To check if SP 2-111-1 was successful, watch the screen during the process. A message is displayed at the end. Also, you can check the result with SP 2-194-10 to -12.

- You should also do the line position adjustment at these times:
  - After you transport or move the machine (you should do the forced line position adjustment if you install the machine at the user location.) if the machine is pre-installed at the workshop and moved to the user location,
  - When you open the drum positioning plate
  - When you remove or replace the motors, clutches, and/or gears related to the drum/development/transfer sections
  - When you remove or replace the image transfer belt, image transfer belt unit or laser optical housing unit

WWW.SERVICE-MANUAL.NET

4.3.6 PRINTER GAMMA CORRECTION

Note

- The ACC is usually sufficient to adjust the color balance to get the best print output. You only need the printer gamma correction to fine-tune to meet user requirements.

Use SP modes if you want to modify the printer gamma curve created with ACC. You can adjust the gamma data for the following:

- Highlight
- Middle
- Shadow areas
- IDmax.

The adjustable range is from 0 to 30 (31 steps).

Copy Mode

- KCMY Color Balance Adjustment -

The adjustment uses only "Offset" values.

Note

- Never change "Option" values (default value is 0).

Highlight (Low ID)	Levels 2 through 5 in the C4 chart 10-level scale
Middle (Middle ID)	Levels 3 through 7 in the C4 chart 10-level scale
Shadow (High ID)	Levels 6 through 9 in the C4 chart 10-level scale
ID max	Level 10 in the C4 chart 10-level scale (affects the entire image density.)
Offset	The higher the number in the range associated with the low ID, middle ID, high ID, and ID max, the greater the density.

There are four adjustable modes (can be adjusted with SP4-918-009):

- Copy Photo mode
- Copy Letter mode
- Copy Letter (Single Color) mode
- Copy Photo (Single Color) mode

WWW.SERVICE-MANUAL.NET

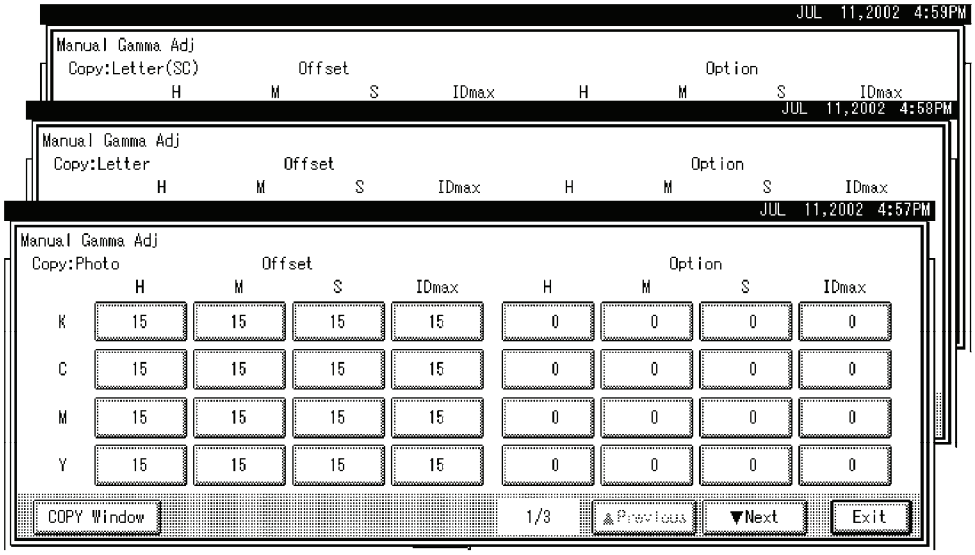

- Adjustment Procedure -

1. Copy the C-4 chart in the mode that you want to adjust.
2. Enter the SP mode.
3. Select "System SP."
4. Select SP4-918-009.
5. Adjust the offset values until the copy quality conforms to the standard (see the table below).

Note

- 1. Never change "Option" value (default value is "0").
- 2. Adjust the density in this order: "ID Max", "Middle", "Shadow", "Highlight".

- Photo Mode, Full Color -

	Item to Adjust	Level on the C-4 chart	Adjustment Standard
1	ID max: (K, C, M, and Y)	1 2 3 4 5 6 7 8 9 10	Adjust the offset value so that the density of level 10 matches that of level 10 on the C-4 chart.
2	Middle (Middle ID) (K, C, M, and Y)	1 2 3 4 5 6 7 8 9 10	Adjust the offset value so that the density of level 6 matches that of level 6 on the C-4 chart.
3	Shadow (High ID) (K, C, M, and Y)	1 2 3 4 5 6 7 8 9 10	Adjust the offset value so that the density of level 8 matches that of level 8 on

WWW.SERVICE-MANUAL.NET

			the C-4 chart.
4	Highlight (Low ID) (K, C, M, and Y)	1 2 3 4 5 6 7 8 9 10	Adjust the offset value so that dirty background does not show on the copy and the density of level 3 is slightly lighter than that of level 3 on the C-4 chart.
5	K Highlight (Low ID) (C,M, and Y) <on the full color copy>	1 2 3 4 5 6 7 8 9 10	Adjust the offset value so that the color balance of black scale levels 3 through 5 in the copy is seen as gray (no C, M, or Y should be visible). If the black scale contains C, M, or Y, do steps 1 to 4 again.

- Photo Mode, Single Color -

	Item to Adjust	Level on the C-4 chart	Adjustment Standard
1	ID max: (K)	1 2 3 4 5 6 7 8 9 10	Adjust the offset value so that the density of level 10 matches that of level 10 on the C-4 chart.
2	Middle (Middle ID) (K)	1 2 3 4 5 6 7 8 9 10	Adjust the offset value so that the density of level 6 matches that of level 6 on the C-4 chart.
3	Shadow (High ID) (K)	1 2 3 4 5 6 7 8 9 10	Adjust the offset value so that the density of level 8 matches that of level 8 on the C-4 chart.
4	Highlight (Low ID) (K)	1 2 3 4 5 6 7 8 9 10	Adjust the offset value so that dirty background does not show on the copy and

WWW.SERVICE-MANUAL.NET

			the density of level 3 is slightly lighter than that of level 3 on the C-4 chart.

- Text (Letter) Mode, Full Color -

	Item to Adjust	Level on the C-4 chart (K)	Adjustment Standard
1	ID max: (K, C, M, and Y)	1 2 3 4 5 6 7 8 9 10	Adjust the offset value so that the density of level 10 matches that of level 10 on the C-4 chart.
2	Middle (Middle ID) (K, C, M, and Y)	1 2 3 4 5 6 7 8 9 10	Adjust the offset value so that the density of level 6 matches that of level 6 on the C-4 chart.
3	Shadow (High ID) (K, C, M, and Y)	1 2 3 4 5 6 7 8 9 10	Adjust the offset value so that the density of level 8 matches that of level 8 on the C-4 chart.
4	Highlight (Low ID) (K, C, M, and Y)	1 2 3 4 5 6 7 8 9 10	Adjust the offset value so that dirty background does not show on the copy and the density of level 3 is slightly lighter than that of level 3 on the C-4 chart.

- Text (Letter) Mode, Single Color -

WWW.SERVICE-MANUAL.NET

	Item to Adjust	Level on the C-4 chart (K)	Adjustment Standard
1	ID max: (K)	1 2 3 4 5 6 7 8 9 10	Adjust the offset value so that the density of level 10 matches that of level 10 on the C-4 chart.
2	Middle (Middle ID) (K)	1 2 3 4 5 6 7 8 9 10	Adjust the offset value so that the density of level 6 matches that of level 6 on the C-4 chart.
3	Shadow (High ID) (K)	1 2 3 4 5 6 7 8 9 10	Adjust the offset value so that the density of level 8 matches that of level 8 on the C-4 chart.
4	Highlight (Low ID) (K)	1 2 3 4 5 6 7 8 9 10	Adjust the offset value so that dirty background does not show on the copy and the density of level 3 is slightly lighter than that of level 3 on the C-4 chart.

Note

- Text parts of the test pattern cannot be printed clearly after you adjust "shadow" as shown above. At this time, check if the 5 line/mm pattern at each corner is printed clearly. If it is not, adjust the offset value of "shadow" again until it is.

WWW.SERVICE-MANUAL.NET

Printer Mode

There are six adjustable modes (select these modes with printer SP1-102-001):

- 1200 x 1200 photo mode
- 1200 x 1200 text mode
- 2400 x 600 photo mode
- 2400 x 600 text mode
- 1800 x 600 photo mode
- 1800 x 600 text mode
- 600 x 600 photo mode
- 600 x 600 text mode

	K	C	M	Y
Highlight	SP1-104-1	SP1-104-21	SP1-104-41	SP1-104-61
Shadow	SP1-104-2	SP1-104-22	SP1-104-42	SP1-104-62
Middle	SP1-104-3	SP1-104-23	SP1-104-43	SP1-104-63
IDmax	SP1-104-4	SP1-104-24	SP1-104-44	SP1-104-64

- Adjustment Procedure -

1. Do ACC for the printer mode.
2. Turn the main power off and on.
3. Enter SP mode.
4. Select "Printer SP".
5. Select SP1-102-001. Then select the necessary print mode to adjust.
6. Choose SP1-103-1 to print out a tone control test sheet if you want to examine the image quality for these settings.
7. Adjust the color density with SP1-104. Compare the tone control test sheet with the C4 test chart.

   Note

   - Adjust the density in this order: "ID Max", "Shadow", "Middle", "Highlight".
8. Use SP1-105-001 to keep the adjusted settings.

WWW.SERVICE-MANUAL.NET

4.4 EXTERIOR COVERS

4.4.1 FRONT DOOR

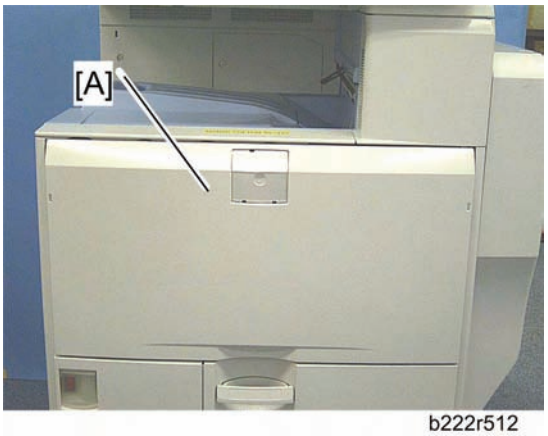

1. Open the front door [A].

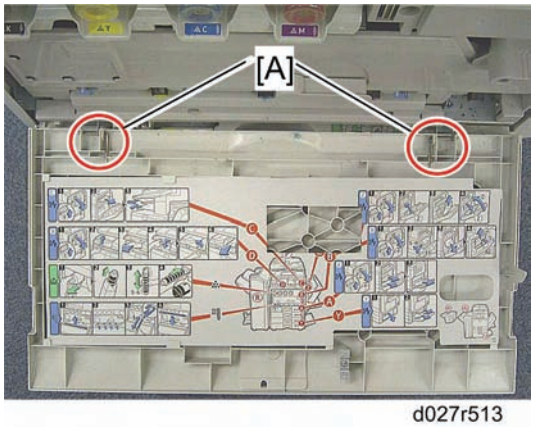

2. Remove the two pins [A], and then remove the front cover.

4.4.2 CONTROLLER COVER

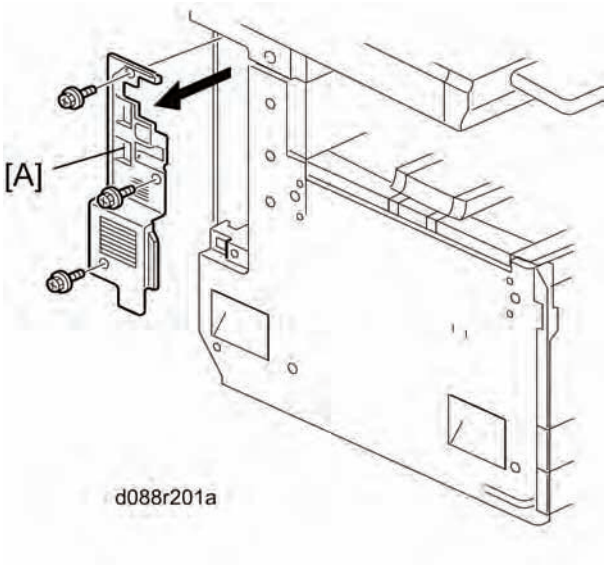

WWW.SERVICE-MANUAL.NET

1. Controller cover [A] (x 3)

4.4.3 LEFT COVER

1. Controller cover (p.4-14)

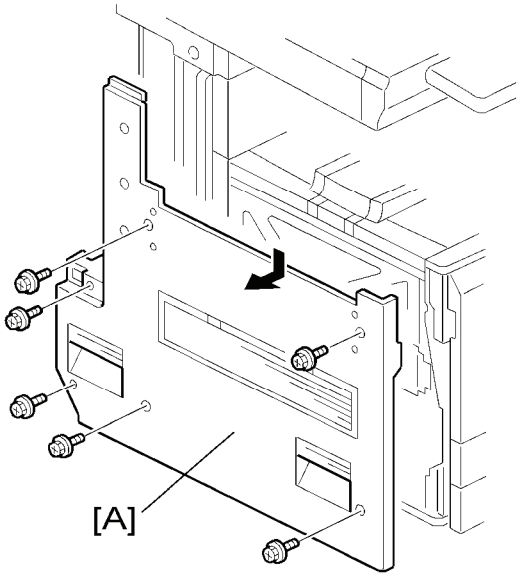

2. Left cover [A] (x 6)

4.4.4 REAR COVER

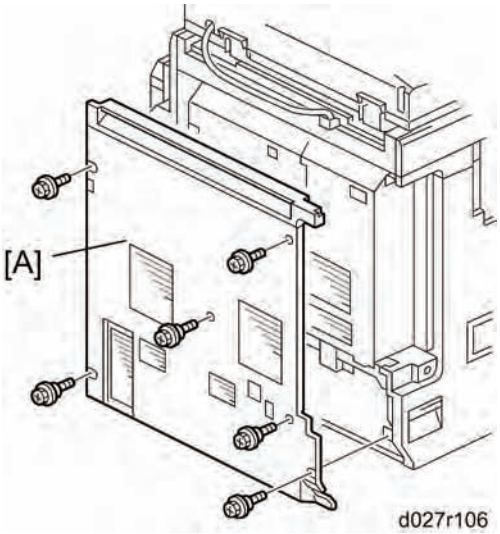

1. Rear cover [A] (x 6)

WWW.SERVICE-MANUAL.NET

4.4.5 RIGHT REAR COVER

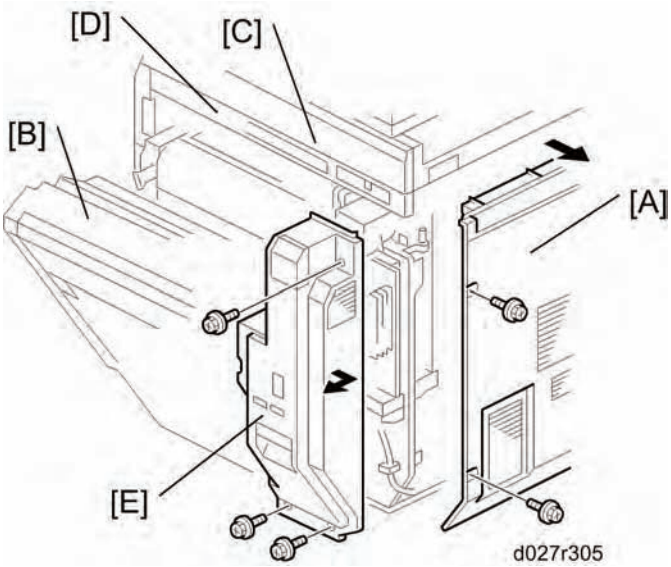

1. Rear cover [A] (x 6)
2. Open the right door [B].
3. Scanner right cover [C] (x 2)
4. Right top cover [D] (x 1)
5. Right rear cover [E] (x 3)

4.4.6 OPERATION PANEL

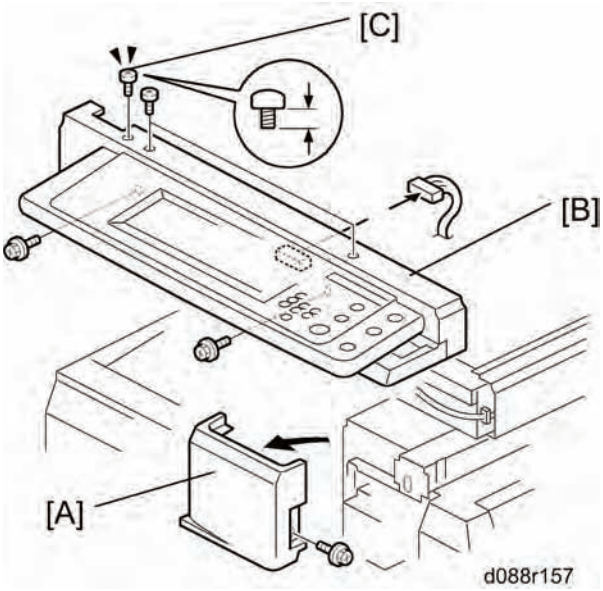

1. Open the right door.
2. Front right cover [A] (x 1)
3. Operation panel with the scanner front cover [B] (x 5, x 1, x 1)

Note

WWW.SERVICE-MANUAL.NET

- The screw [C] is shorter than the other screws on the top side of the operation panel.

4. Scanner front cover [A] (x 2)

5. Operation panel [A]

4.4.7 PAPER EXIT COVER

1. Front right cover (p.4-16 "Operation Panel")

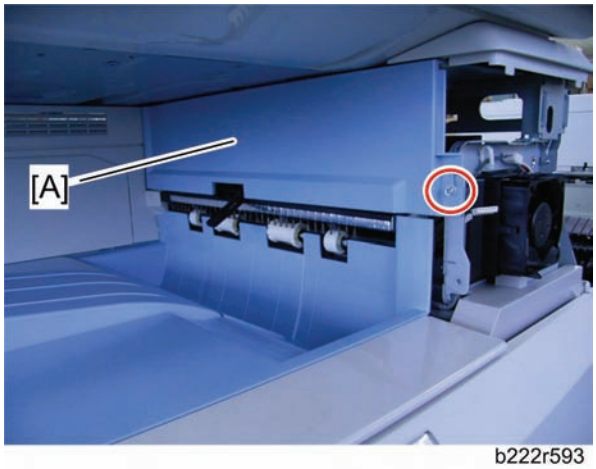

2. Paper exit cover [A] (x 1)

WWW.SERVICE-MANUAL.NET

4.4.8 INNER TRAY

1. Remove the image transfer belt unit.
2. Paper exit cover (☛ p.4-17)
3. Left cover (☛ p.4-15)

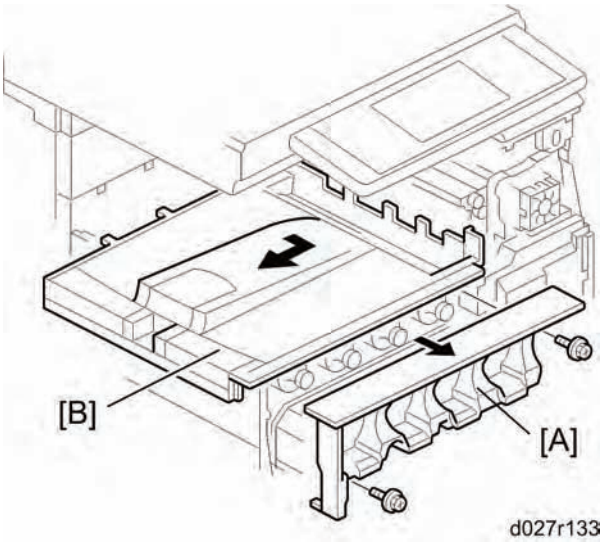

4. Toner cartridge cover [A] (x 2)
5. Inner tray [B]

4.4.9 OZONE FILTER AND DUST FILTER

Ozone filters for the scanner unit

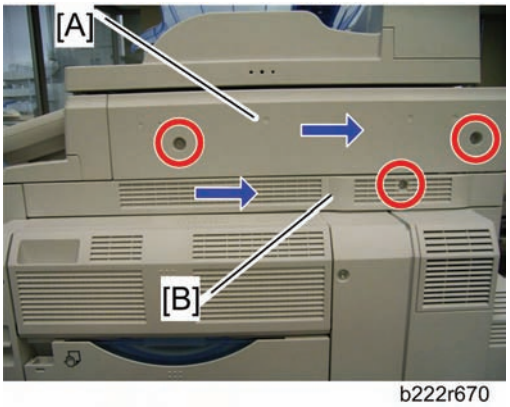

1. Scanner right cover [A] (x 2)
2. Right top cover [B] (x 1)

WWW.SERVICE-MANUAL.NET

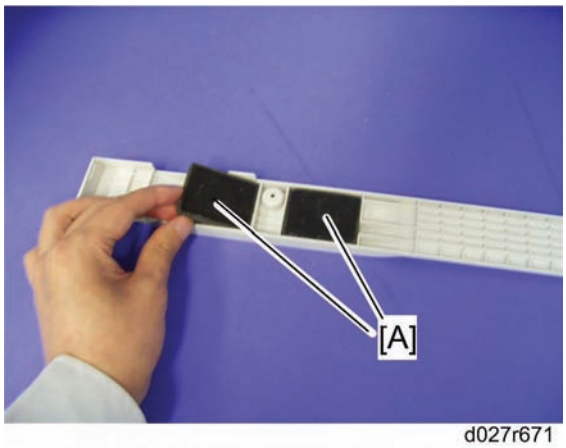

3. Ozone filters [A] in the right top cover.

Ozone filter and dust filter for the IH inverter

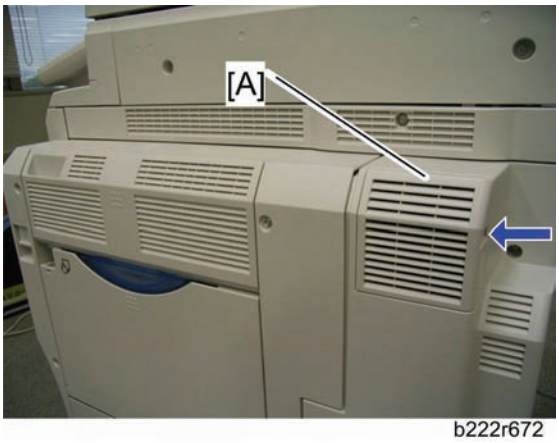

1. IH inverter fan cover [A] (hook)

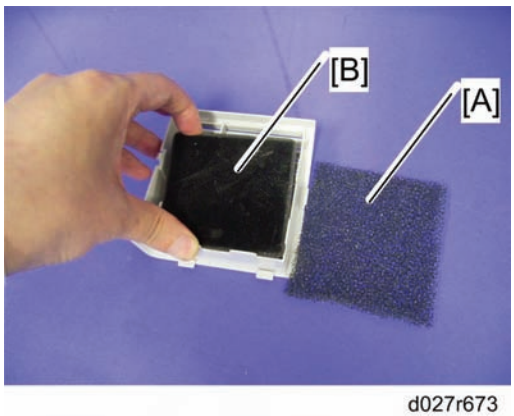

2. Dust filter [A]
3. Ozone filter [B]

WWW.SERVICE-MANUAL.NET

4.5 SCANNER UNIT

4.5.1 EXPOSURE GLASS

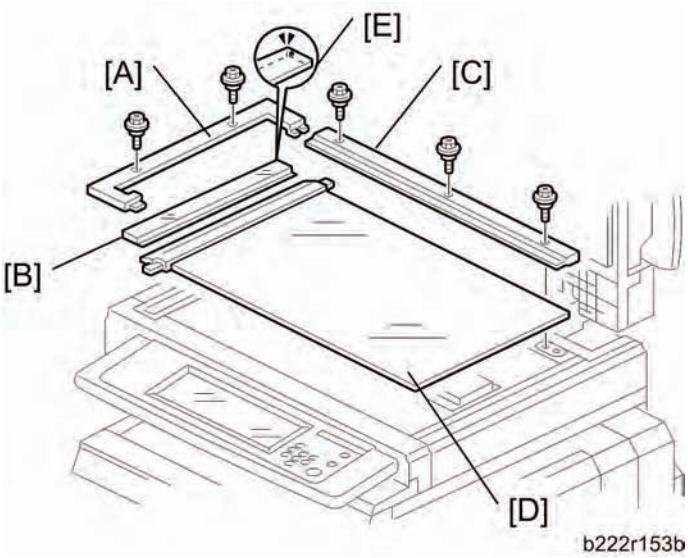

1. Glass cover [A] (x 2)
2. ARDF exposure glass [B]
3. Rear scale [C] (x 3)
4. Exposure glass with left scale [D]

Note

- Position the white marker [E] at the rear-left corner and the black or blue marker at the front-left corner when you reattach the ARDF exposure glass.

WWW.SERVICE-MANUAL.NET

4.5.2 EXPOSURE LAMP

1. Operation panel with scanner front cover (☛ p.4-16 "Operation Panel")
2. Exposure glass (☛ p.4-20)

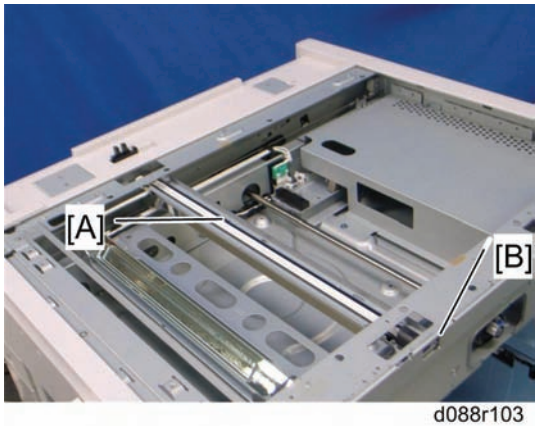

d088r103

3. Move the 1st scanner carriage [A] to the cutout [B] in the front frame.

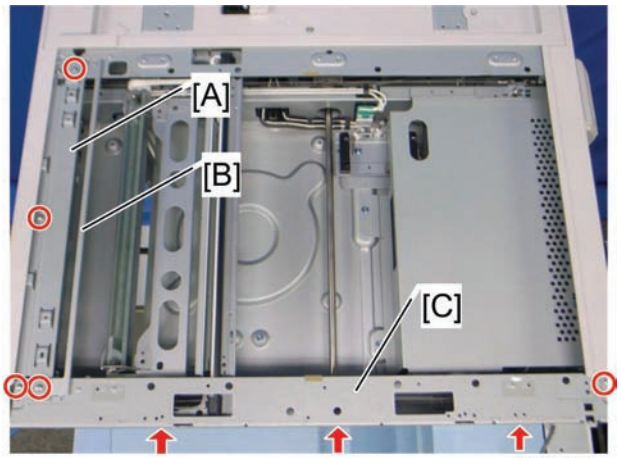

d088r104

4. Scanner left stays [A] and [B] (x 3)
5. Scanner front frame [C] (x 5: two stepped screws on the top)

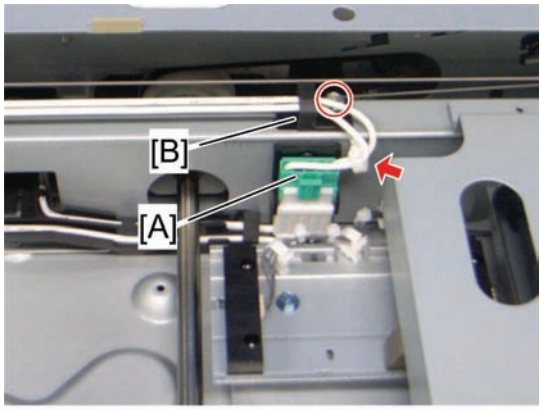

d088r105

6. Disconnect the connector [A] (x 1, x 1).
7. Remove the clamp bracket [B] (x 1).

WWW.SERVICE-MANUAL.NET

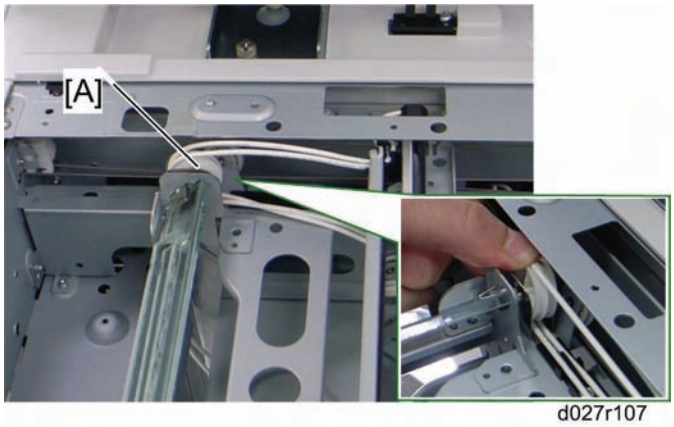

8. Remove the pulley [A].

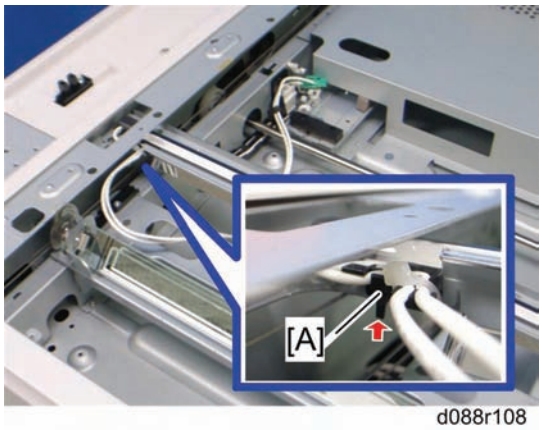

9. Remove the plastic bracket [A] (hook).

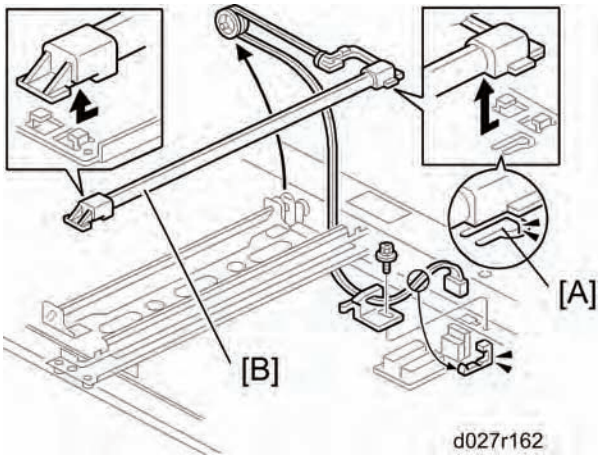

10. Hold down the snap [A], and then slide the exposure lamp [B] to the front side.
11. Exposure lamp [B]

WWW.SERVICE-MANUAL.NET

4.5.3 SCANNER MOTOR

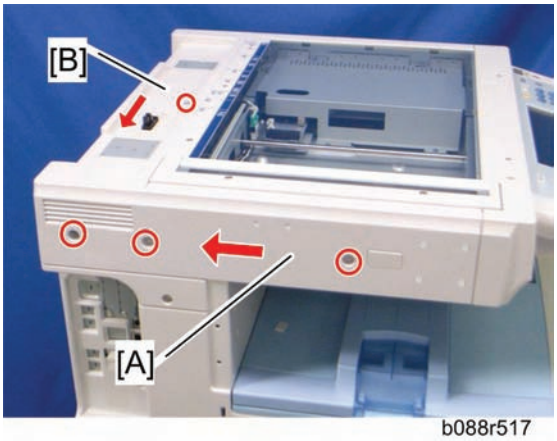

1. Scanner left cover [A] (x 3)
2. Scanner rear cover [B] (x 1)

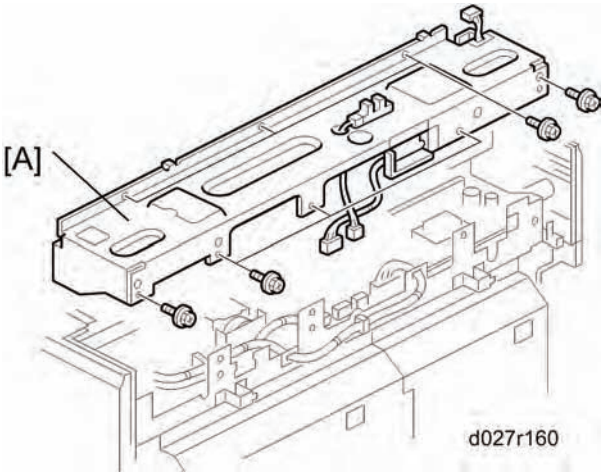

3. Scanner rear frame [A] (x 8, x 3, x 1)

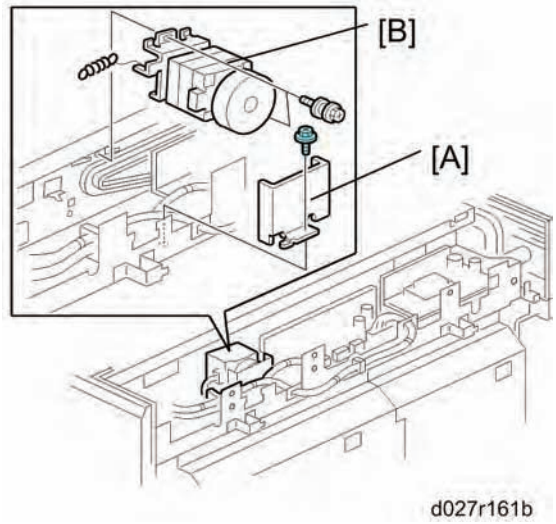

4. Scanner motor bracket [A] (x 1)
5. Scanner motor [B] (x 2, x 1, spring x 1, belt x 1)

WWW.SERVICE-MANUAL.NET

Note

- After replacing the scanner motor, do the image adjustments in the following section of the manual (☛ p.4-3 "Scanning" in the "Image Adjustment" section).

4.5.4 SENSOR BOARD UNIT (SBU)

1. Exposure glass (☛ p.4-20)

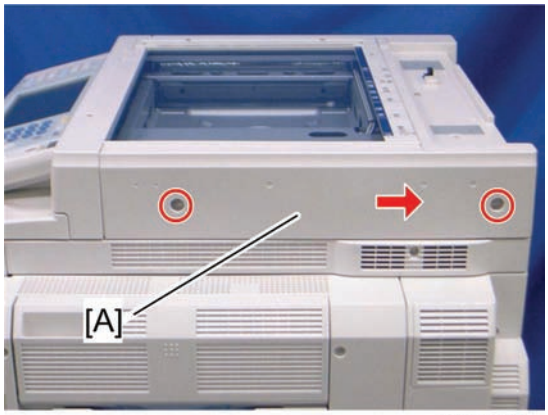

d088r733

2. Scanner right cover [A] (x 2)

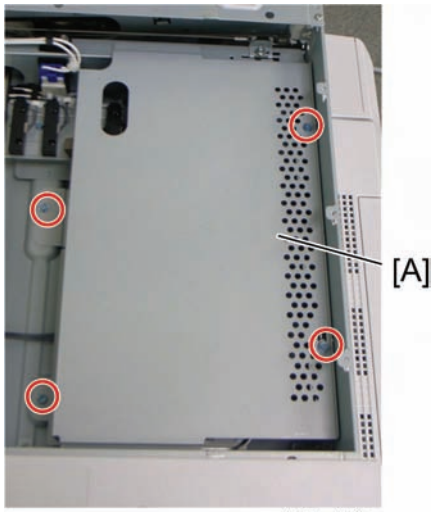

d027r109

3. SBU cover bracket [A] (x 4)

WWW.SERVICE-MANUAL.NET

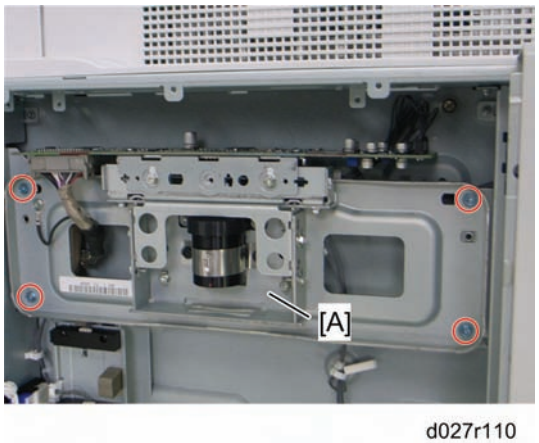

4. Sensor board unit [A] (x 4, x 2, ground cable x 1)

When reassembling

Adjust the following SP modes after you replace the sensor board unit:

- SP4–008 (Sub Scan Mag): See "Image Adjustment: Scanning".
- SP4–010 (Sub Mag Reg.): See "Image Adjustment: Scanning".
- SP4–011 (Main Scan Reg): See "Image Adjustment: Scanning".
- SP4–688 (DF: Density Adjustment): Use this to adjust the density level if the ID of outputs made in the DF and Platen mode is different.

4.5.5 ORIGINAL LENGTH SENSORS

1. Exposure glass with left scale (p.4-20 "Exposure Glass")
2. SBU cover bracket (p.4-23 "Sensor Board Unit (SBU)")

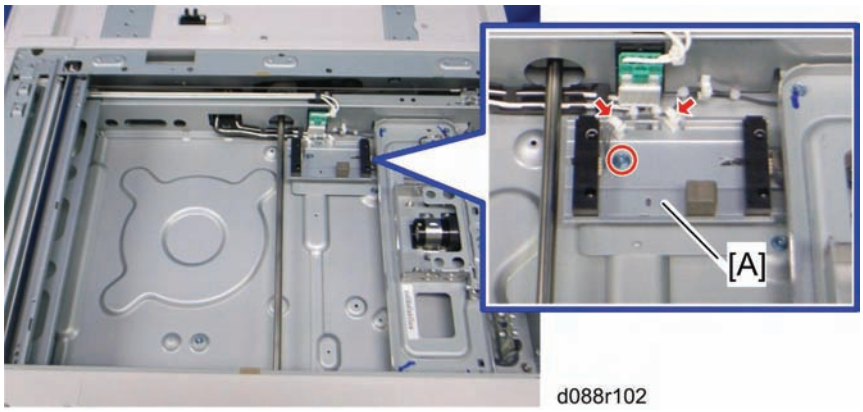

3. Original length sensor bracket [A] (x 1, x 2, x 2)

WWW.SERVICE-MANUAL.NET

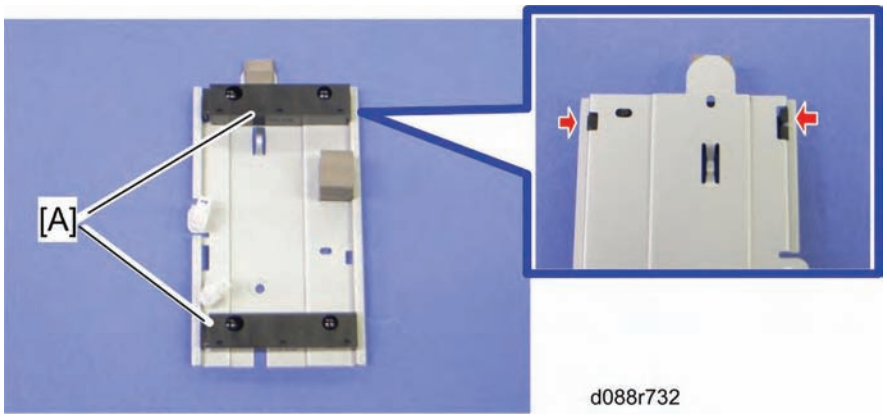

4. Original length sensors [A] (hooks)

4.5.6 EXPOSURE LAMP STABILIZER

1. Scanner rear cover (☛ p.4-22 "Scanner Motor")
2. Scanner rear frame (☛ p.4-22 "Scanner Motor")

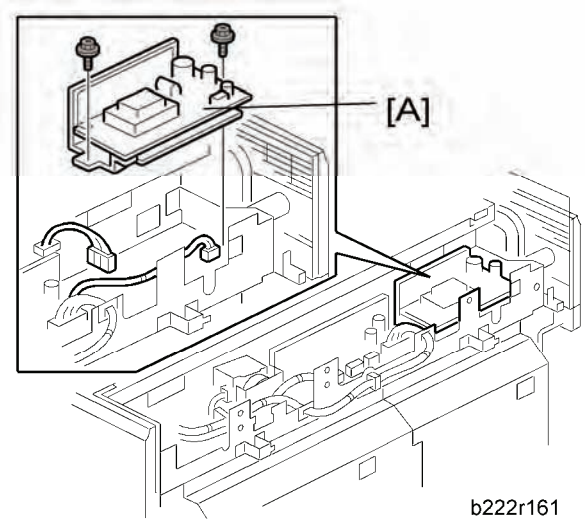

3. Exposure lamp stabilizer [A] (x 2, x 2)

WWW.SERVICE-MANUAL.NET

4.5.7 SIO (SCANNER IN/OUT) BOARD

1. Scanner rear cover (☛ p.4-22 "Scanner Motor")
2. Scanner rear frame (☛ p.4-22 "Scanner Motor")

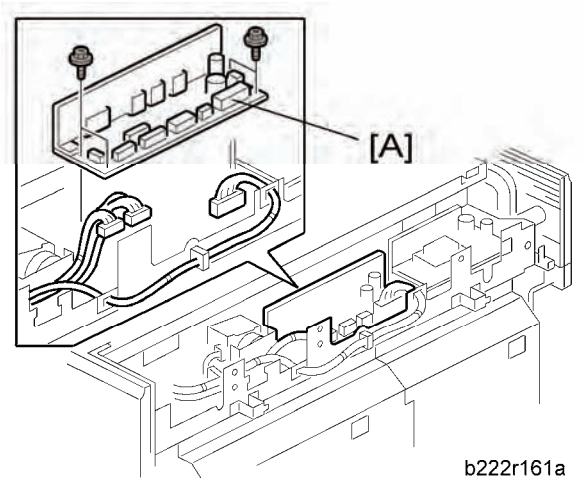

3. SIO board with bracket [A] (x 4, All s)

WWW.SERVICE-MANUAL.NET

4.5.8 SCANNER HP SENSOR

1. Scanner left cover and Scanner rear cover (☛ p.4-22 "Scanner Motor")
2. Exposure glass (☛ p.4-20)

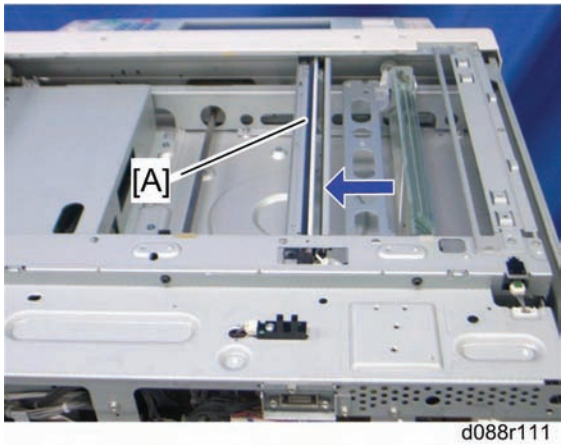

3. Move the 1st scanner carriage [A] to the right side.

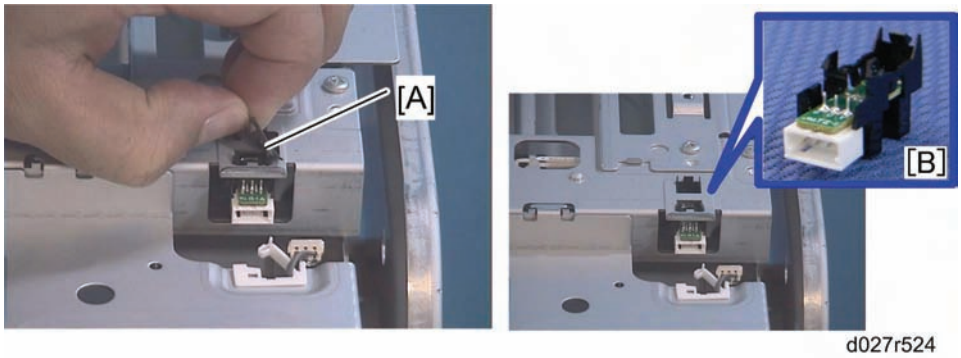

4. Remove the mylar [A]
5. Remove the scanner HP sensor [B] (x 1, three snaps)

4.5.9 PLATEN COVER SENSOR

1. Scanner left cover and Scanner rear cover (☛ p.4-22 "Scanner Motor")

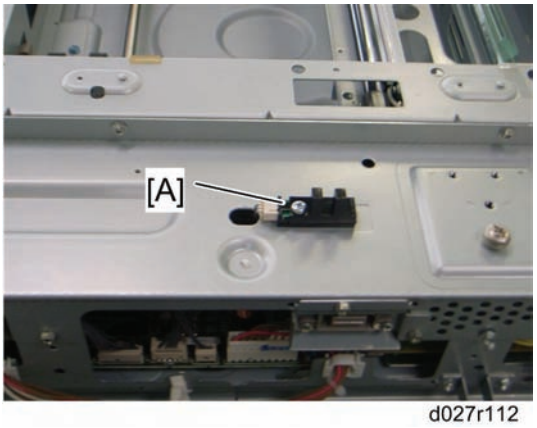

2. Platen cover sensor [A] (x 1, x 1)

WWW.SERVICE-MANUAL.NET

4.5.10 FRONT SCANNER WIRE

1. Operation panel with the scanner front cover (☛ p.4-16)
2. Front frame (☛ p.4-20 "Exposure Lamp")
3. To make reassembly easy, slide the 1st scanner carriage to the right.

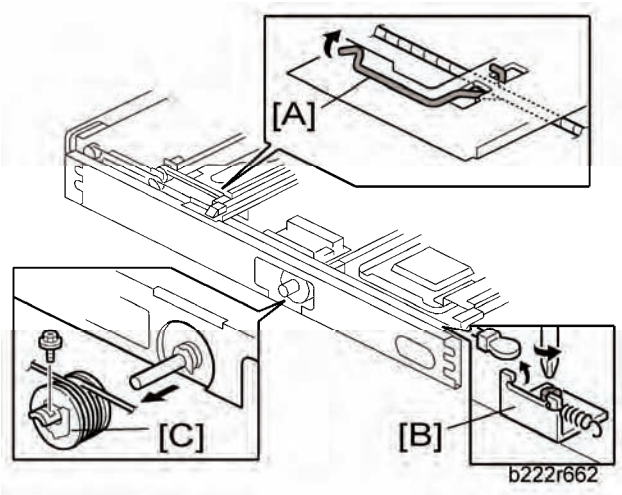

4. Front scanner wire clamp [A]
5. Front scanner wire bracket [B] (x 1)
6. Front scanner wire and scanner drive pulley [C] (x 1)

Reassembling the Front Scanner Wire

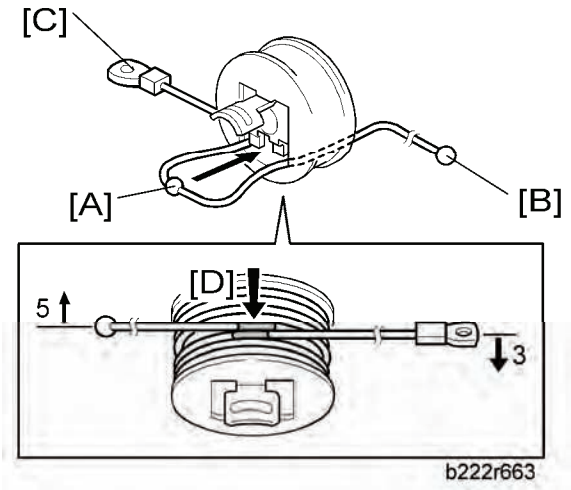

1. Position the center ball [A] in the middle of the forked holder.
2. Pass the right end (with the ball) [B] through the square hole. Pass the left end (with the ring) [C] through the notch.
3. Wind the right end counterclockwise (shown from the machine's front) five times. Wind the left end clockwise twice.

WWW.SERVICE-MANUAL.NET

Note

- The two red marks [D] come together when you have done this. Stick the wire to the pulley with tape. This lets you easily handle the assembly at the time of installation.

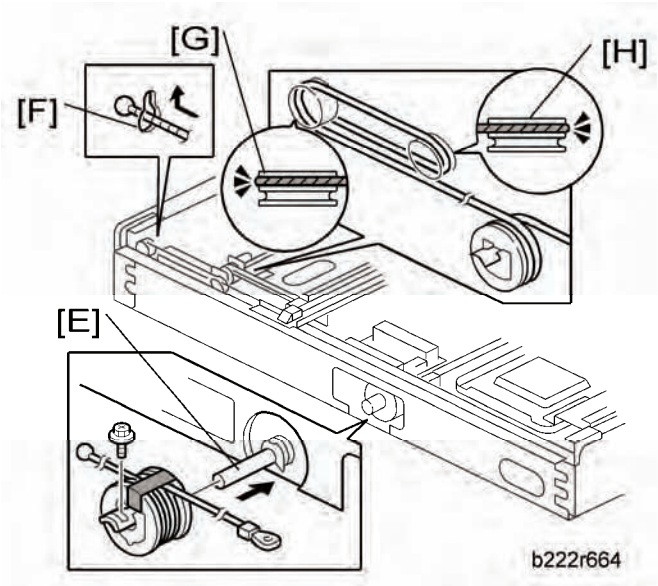

4. Install the drive pulley on the shaft [E].

Note

- Do not attach the pulley to the shaft with the screw at this time.

5. Insert the left end into the slit [F]. The end should go via the rear track of the left pulley [G] and the rear track of the movable pulley [H].

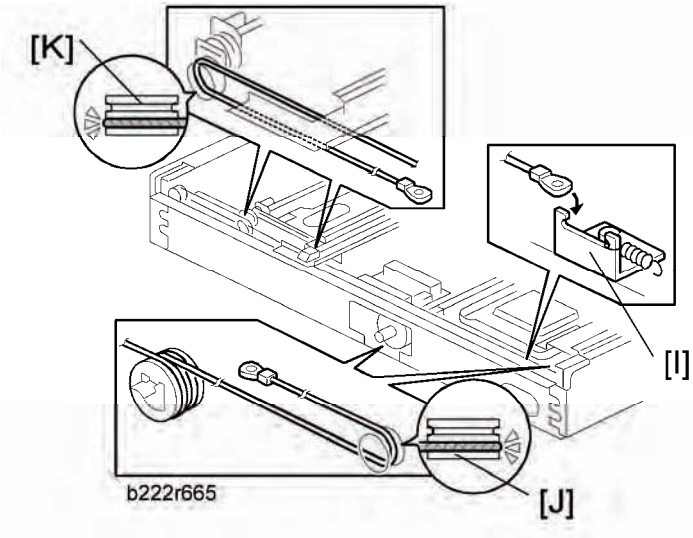

6. Hook the right end onto the front scanner wire bracket [I]. The end should go via the front track of the right pulley [J] and the front track of the movable pulley [K].

WWW.SERVICE-MANUAL.NET

Note

- Do not attach the scanner wire bracket with the screw at this time.

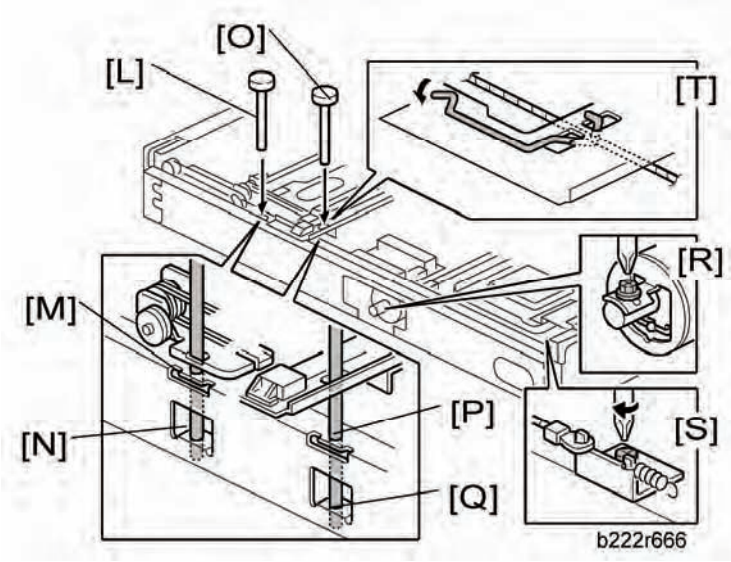

7. Remove the tape from the drive pulley.
8. Insert a scanner-positioning pin [L] through the 2nd carriage hole [M] and the left holes [N] in the front rail. Insert another scanner positioning pin [O] through the 1st carriage hole [P] and the right holes in the front rail [Q].
9. Insert two more scanner positioning pins through the holes in the rear rail.
10. Screw the drive pulley to the shaft [R].
11. Screw the scanner wire bracket to the front rail [S].
12. Install the scanner wire clamp [T].
13. Pull out the positioning pins.

Note

- Make sure the 1st and 2nd carriages move smoothly after you remove the positioning pins. Do steps 8 through 13 again if they do not.
- After replacing the scanner wire, do the image adjustments in the following section of the manual (☛ p.4-3 "Scanning" in the "Image Adjustment" section).

WWW.SERVICE-MANUAL.NET

4.5.11 REAR SCANNER WIRE

1. Exposure glass (☛ p.4-20)
2. Scanner rear frame (☛ p.4-22 "Scanner Motor")
3. Scanner motor (☛ p.4-22 "Scanner Motor")
4. IOB with bracket (☛ p.4-133 "IOB (In/Out Board)")

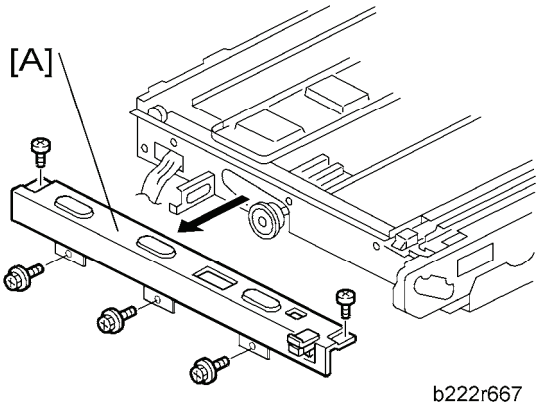

5. Rear rail frame [A] (x 5)

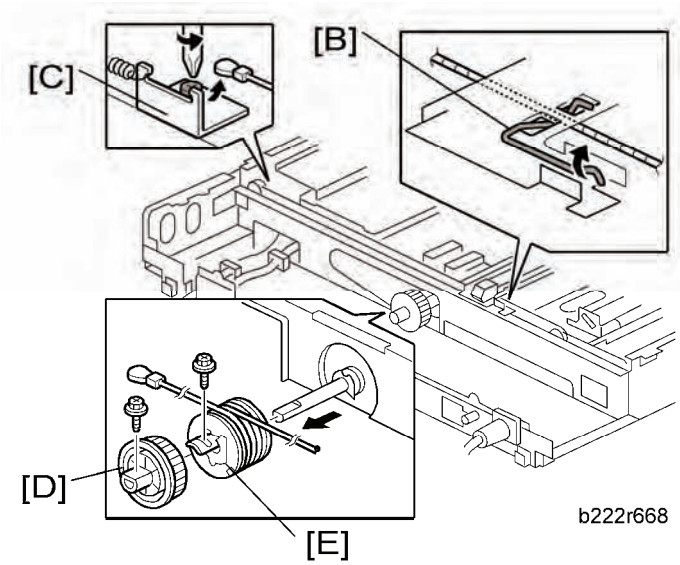

6. To make reassembly easy, slide the first scanner to the center.
7. Rear scanner wire clamp [B]
8. Rear scanner wire bracket [C] (x 1)
9. Scanner motor gear [D] (x 1)
10. Rear scanner wire and scanner drive pulley [E] (x 1)

WWW.SERVICE-MANUAL.NET

Reassembling the Rear Scanner Wire

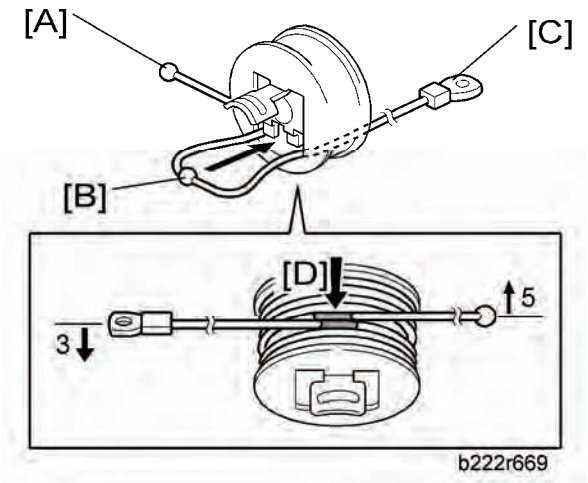

1. Position the center ball [B] in the middle of the forked holder.
2. Pass the end with the ball [A] through the right square hole from the front.
3. Position the center ball [B] in the middle of the notch, as shown by the arrow.
4. Pass the ball end [A] through the drive pulley notch.
5. Wind the end with the ring [C] clockwise (shown from the machine's front) three times; wind the ball end [A] clockwise (shown from the machine's front) five times.

   Note

   - The two red marks [D] should meet when you have done this.
6. Stick the wire to the pulley with tape, so you can easily handle the pulley and wire during installation.
7. Install the drive pulley on the shaft.

   Note

   - Do not screw the pulley onto the shaft yet.
8. Install the wire.

   Note

   - The winding of the wire on the three pulleys at the rear of the scanner should be the same as the winding on the three pulleys at the front. This must show as a mirror image. Example: At the front of the machine, the side of the drive pulley with the three windings must face the front of the machine. At the rear of the machine, it must face the rear.
9. Perform steps 8 through 13 in "Reassembling the Front Scanner Wire".

WWW.SERVICE-MANUAL.NET

Note

- After replacing the scanner wire, do the image adjustments in the following section of the manual (☛ p.4-3 "Scanning" in the "Image Adjustment" section).

4.5.12 TOUCH PANEL POSITION ADJUSTMENT

Note

- It is necessary to calibrate touch panel at the following times:
- When you replace the operation panel.
- When you replace the controller board.
- When the touch panel detection function does not operate correctly.

Do not use items [2] to [9] on the Self-Diagnostic Menu. These items are for design use only.

1. Press , press "1", "9", "9", "3", then press 5 times to open the Self-Diagnostics menu.

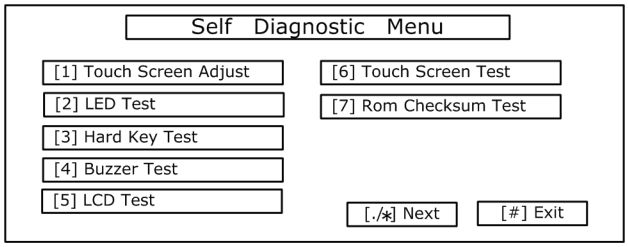

b178r548

2. On the touch screen press “Touch Screen Adjust” (or press "1").
3. Use a pointed (not sharp) tool to press the upper left mark "↖".

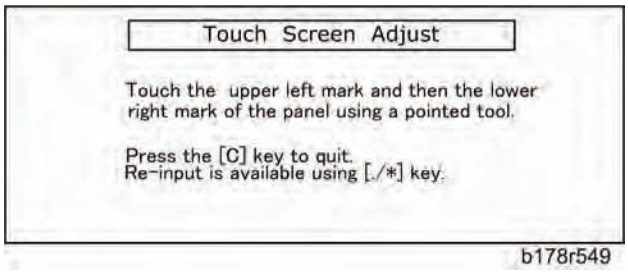

b178r549

4. Press the lower right mark when “↘” shows.
5. Press [#] OK on the screen (or press) when you are finished.
6. Touch [#] Exit on the screen to close the Self-Diagnostic menu. Save the calibration settings.

WWW.SERVICE-MANUAL.NET

4.6 LASER OPTICS

⚠WARNING

- Turn off the main switch and unplug the machine before beginning any of the procedures in this section. Laser beams can cause serious eye injury.

4.6.1 CAUTION DECAL LOCATION

Caution decals are placed as shown below.

⚠WARNING

- Be sure to turn off the main switch and disconnect the power plug from the power outlet before beginning any disassembly or adjustment of the laser unit. This copier uses a class IIIb laser beam with a wavelength of 655 nm and an output of 7 mW. The laser can cause serious eye injury.

4.6.2 LASER OPTICS HOUSING UNIT

⚠CAUTION

- Before installing a new laser optics housing unit, remove the sponge padding and the tag from the new unit.

Note

- A new laser optics housing unit has a bracket to protect the LD units. When you install the new unit, do not remove the bracket until near the end of the installation procedure (the correct time is stated in the manual).
- This bracket protects a capacitor on the unit. If the bracket is removed too early, you could break the capacitor on the corner of the main frame when you install the new unit.

WWW.SERVICE-MANUAL.NET

Preparing the new laser optics housing unit

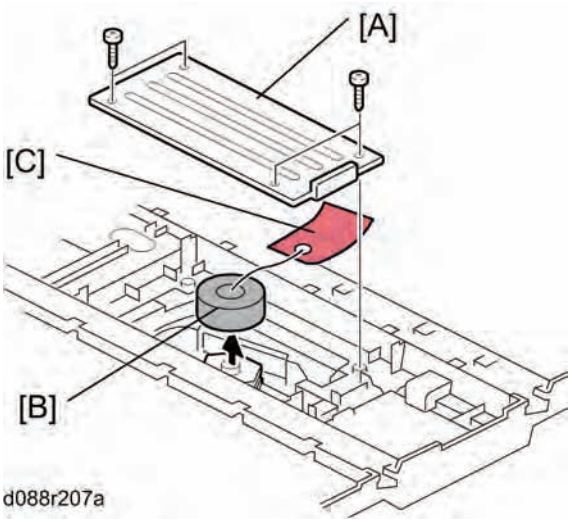

1. Polygon motor cover [A] of the laser optics housing unit (x 4)
2. Sponge padding [B]
3. Tag [C]
4. Reinstall the polygon motor cover [A].

Before removing the old laser optics housing unit

Do the following settings before removing the laser optics housing unit. These are adjustments for skew adjustment motors in the laser optics housing unit.

1. Plug in and turn on the main power switch of the copier.
2. Enter the SP mode.
3. Execute SP2220-001 to clear the L2 lens positioning motor setting for Magenta.
4. Execute SP2220-002 to clear the L2 lens positioning motor setting for Cyan.
5. Execute SP2220-003 to clear the L2 lens positioning motor setting for Yellow.
6. Exit the SP mode.
7. Turn off the main power switch and disconnect the power cord of the copier.

Recovery procedure for no replacement preparation of laser optics housing unit

If you did not do the procedure in ‘Before removing the old laser optics housing’ before removing the old laser optics housing unit, you must do the following.

1. Turn off the main power switch and disconnect the power cord of the copier.
2. Remove the left cover and harness cover bracket (see the following "Removing the old laser optics housing unit")

WWW.SERVICE-MANUAL.NET

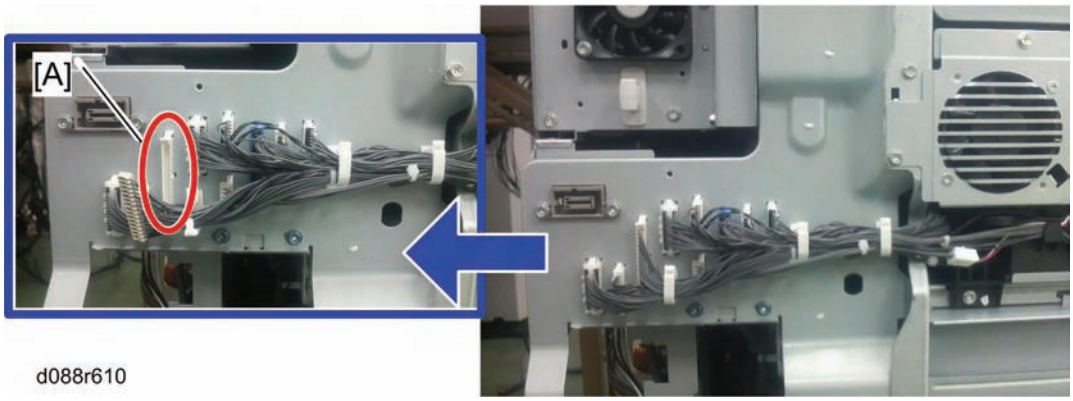

3. Disconnect the harness [A] of the skew correction motor.
4. Do steps 1 to 7 of "Before removing the old laser optics housing unit".
5. Connect the harness [A] and reinstall the harness bracket and left cover.
6. Plug in and turn on the main power switch.

Removing the old laser optics housing unit

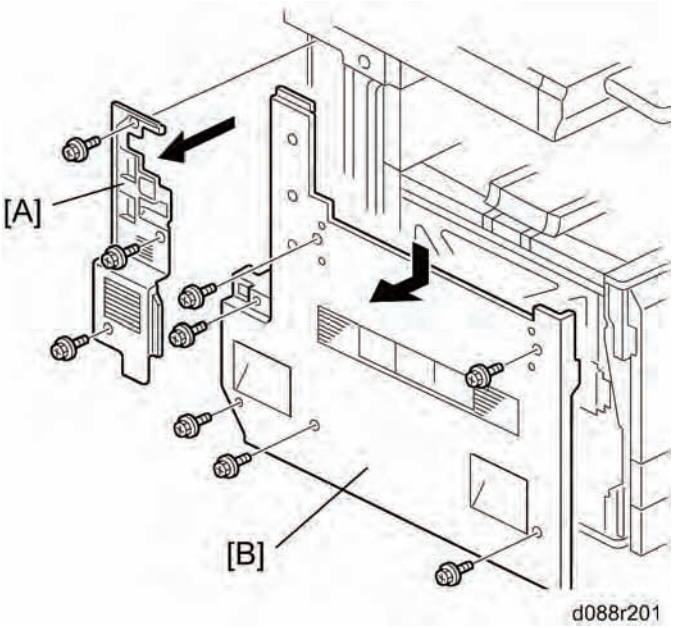

1. Controller cover [A] (x 3)
2. Left cover [B] (x 6)

WWW.SERVICE-MANUAL.NET

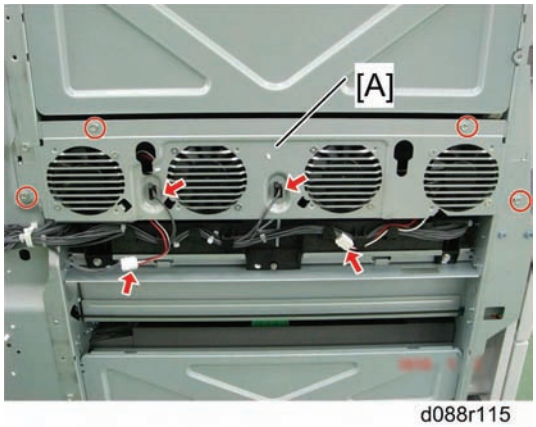

3. Airflow fan bracket [A] for the laser housing optics unit (x 4, x 4)

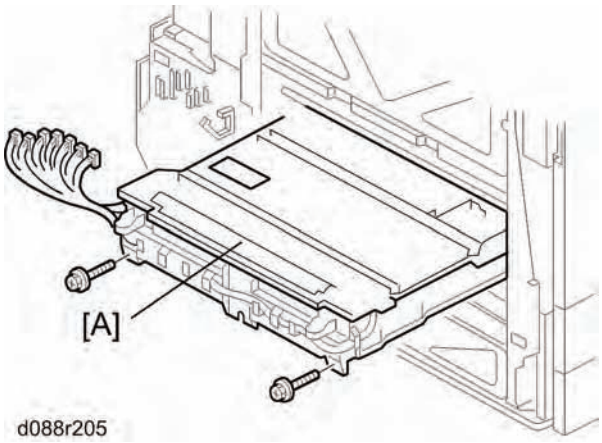

4. Remove the old laser optics housing unit [A] (x 2, All 's, x 3)

Installing a new Laser Optics Housing Unit

Note

- A new laser optics housing unit has a bracket to protect the LD units. When you install the new unit, do not remove the bracket until near the end of the installation procedure (the correct time is stated in the manual).
- This bracket protects a capacitor on the unit. If the bracket is removed too early, you could break the capacitor on the corner of the main frame when you install the new unit.

WWW.SERVICE-MANUAL.NET

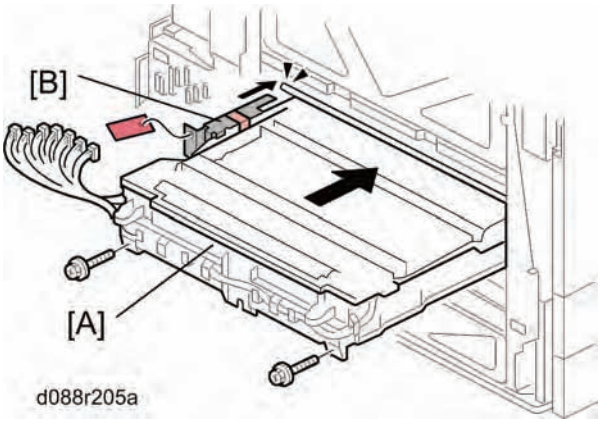

1. Push the new laser optics housing unit [A] slowly into the copier until the bracket [B] bumps against the frame of the copier.
2. Remove the bracket [B], and then push the new laser optics housing unit fully into the copier (x 2, All 's, x 3).
3. Reassemble the machine.

After installing the new laser optics housing unit

Do the following adjustment after installing the new laser optics housing unit.

1. Plug in and turn on the main power switch.

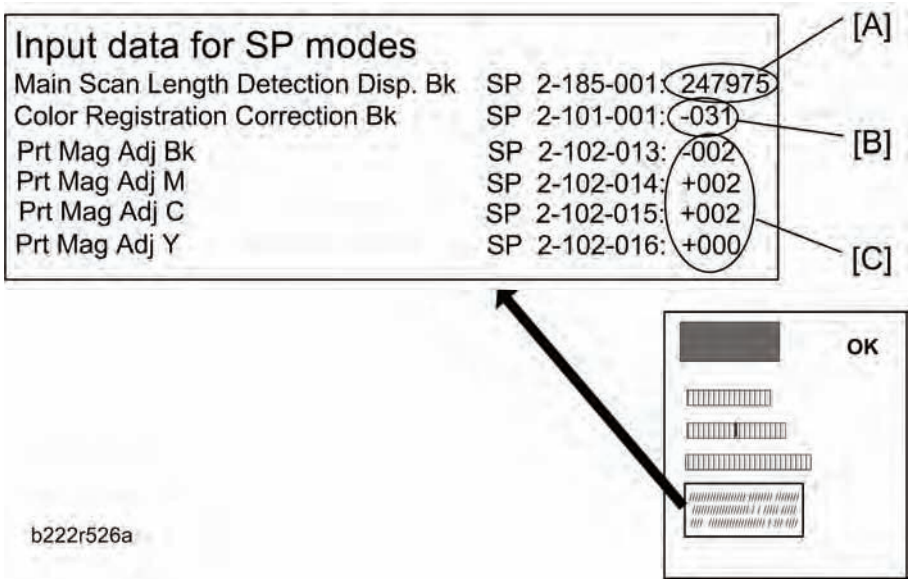

2. Adjust the main scan magnification for K, M, C, Y.
   - Input the standard values [C] provided with a new laser optics housing unit for the main scan magnification adjustment with SP2-102-013, 014, 015, 016.

WWW.SERVICE-MANUAL.NET

Note

- The values [C] are different for each laser optics housing unit.

3. Adjust the main scan magnification only for black (K).
   - Input the standard value [A] provided with a new laser optics housing unit for the main scan magnification adjustment with SP2-185-001.

   Note

   - The value [A] is different for each laser optics housing unit.
   - Print the test pattern (14: 1-dot trimming pattern in the SP2-109-003).
   - Check that the left and right trim margin is within 4 ± 1 mm. If not, change the standard value for the main scan magnification adjustment.
4. Adjust the main scan registration only for black (K).
   - Input the registration value [B] provided with a new laser optics housing unit for the main scan registration adjustment with SP2101-001.

   Note

   - The value [B] is different for each laser optics housing unit.
   - Print the test pattern (14: 1-dot trimming pattern in the SP2-109-003).
   - Check that the left trim margin is within 2 ± 1 mm. If not, change the registration value for the main scan registration adjustment.
5. Select "0" with SP2-109-003 after printing the "1-dot trimming pattern.
6. Do the line position adjustment.
   - First do SP2-111-3.
   - Then do SP2-111-1.

     To check if SP 2-111-1 was successful, watch the screen during the process. A message is displayed at the end. Also, you can check the result with SP 2-194-10 to -12.
7. Exit the SP mode.

After you replace the housing unit, do the adjustments in the following section of the manual: Image Adjustment – Registration.

WWW.SERVICE-MANUAL.NET

4.6.3 POLYGON MIRROR MOTOR AND DRIVE BOARD

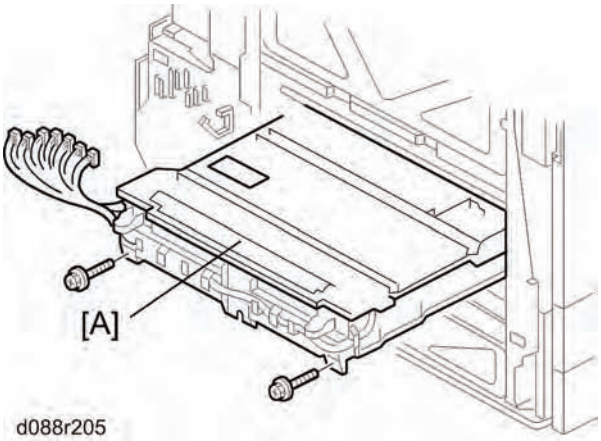

1. Laser optics housing unit [A] (☛ p.4-34)

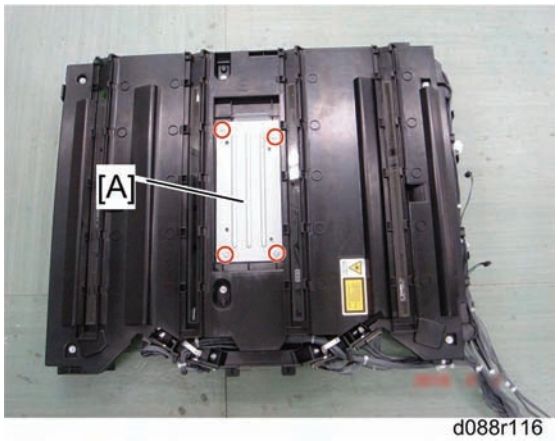

2. Polygon mirror motor cover [A] of the laser optics housing unit (x 4)

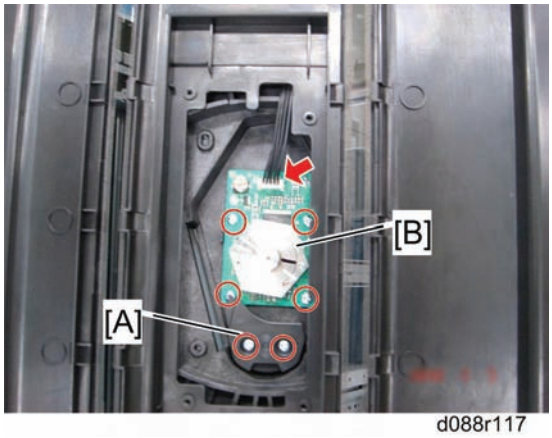

3. Polygon mirror motor holder [A] (x 2)
4. Polygon mirror motor [B] (x 4, x 1)

After installing the polygon mirror motor:

- 1) Do the "Forced Line Position Adj. Mode c" (SP2-111-3).
- 2) Then do the "Forced Line Position Adj. Mode a" (SP2-111-1).

To check if SP 2-111-1 was successful, watch the screen during the process. A message is

WWW.SERVICE-MANUAL.NET

displayed at the end. Also, you can check the result with SP 2-194-10 to -12.

After you replace the motor, do the adjustments in the following section of the manual: Image Adjustment – Registration.

4.6.4 AIRFLOW FANS

1. Controller cover (☛ p.4-14)
2. Left cover (☛ p.4-15)

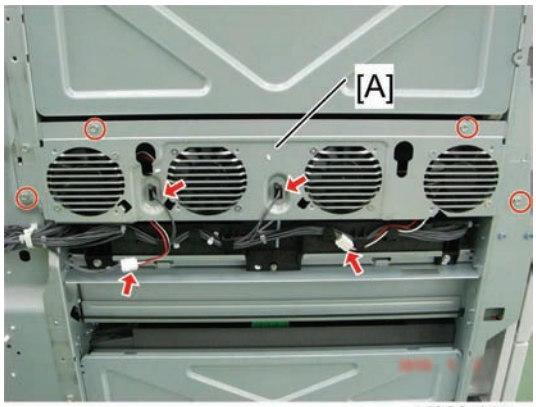

d088r115

3. Airflow fan bracket [A] for the laser housing optics unit (x 4, x 4)

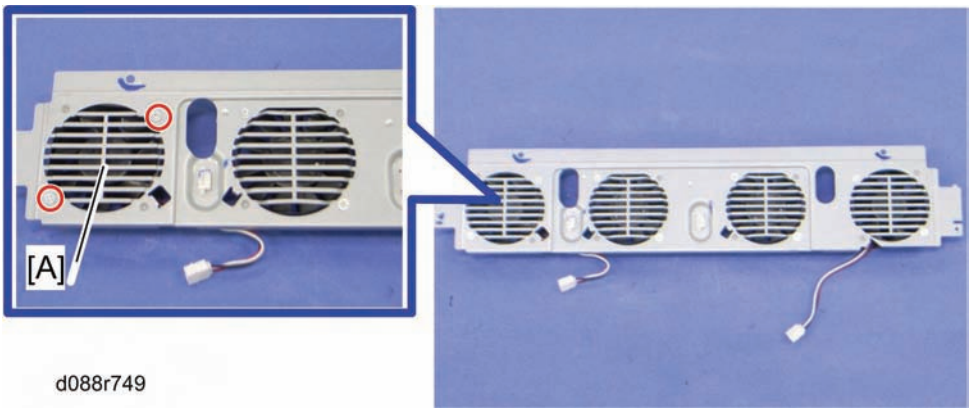

d088r749

4. Airflow fans [A]
   - There are four airflow fans on the bracket.

WWW.SERVICE-MANUAL.NET

4.7 IMAGE CREATION

4.7.1 PCDU

Note

- Do not touch the OPC drum. Do not let metal objects touch the development sleeve.

1. Open the front door.

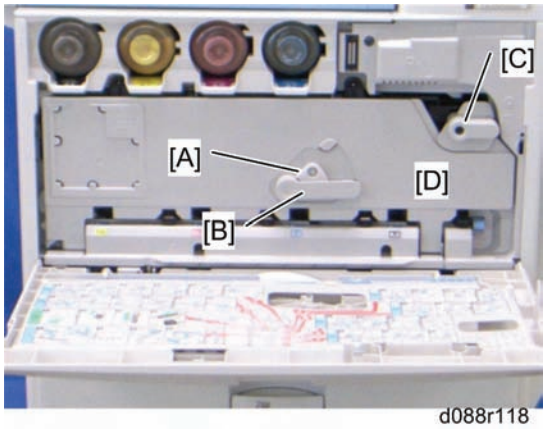

2. Lever lock [A] (x 1)
3. Turn the drum positioning plate lever [B] and the image transfer unit lock lever [C] counter-clockwise.
4. Open the drum positioning plate [D].

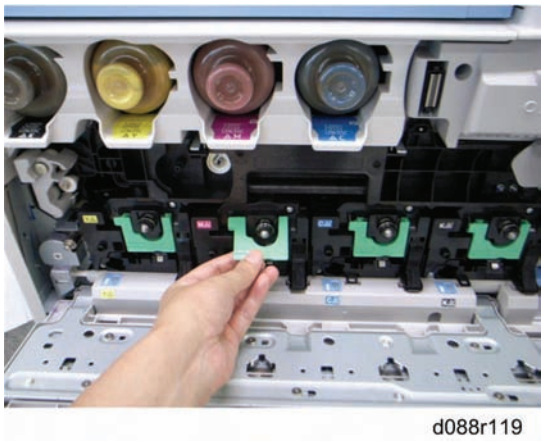

5. Pull out the PCDU (hold the grip while you pull it out).

WWW.SERVICE-MANUAL.NET

4.7.2 DRUM UNIT AND DEVELOPMENT UNIT

The new drum unit has a front cover and a front joint. When you attach the new drum unit to the development unit, remove a front cover and a front joint at first.

And use them for reassembling the new drum unit and development unit.

1. If you install a new drum unit, set SP 3902-xxx to "1".
   - Black: 3902-009
   - Yellow: 3902-010
   - Cyan: 3902-011
   - Magenta: 3902-012

   Note

   - If you do this, then the machine will reset the PM counter for the drum unit automatically, after you turn the power on again.
2. Turn the machine power off.
3. PCDU (☛ p.4-42)

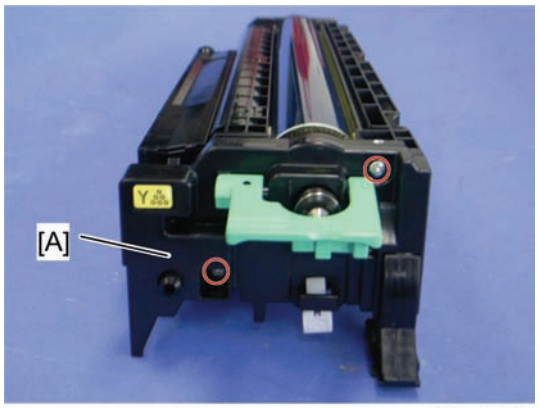

d027r120

4. Front cover [A] (x 2)

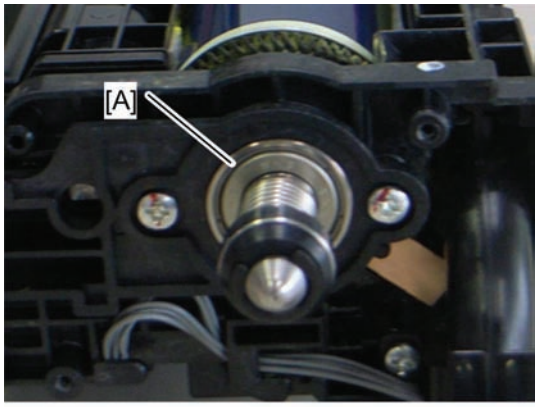

d027r121

Note

- Do not touch the bearing [A] after removing the front cover. The bearing is properly applied with lubricant.

WWW.SERVICE-MANUAL.NET

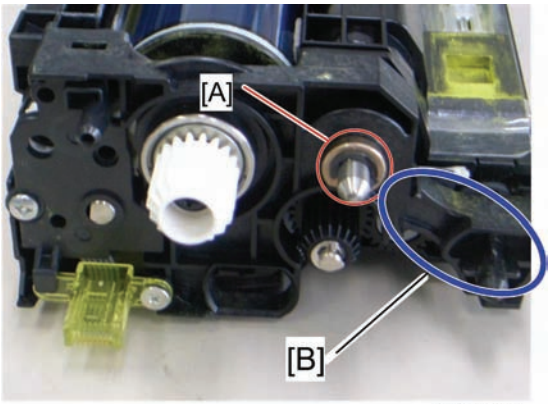

d027r122

5. Remove the bushing [A] of the development roller at the rear of the PCDU (x 1).

Important

- Do not put too much weight on the PCDU. Otherwise, the plastic frame [B] of the development unit may be damaged.

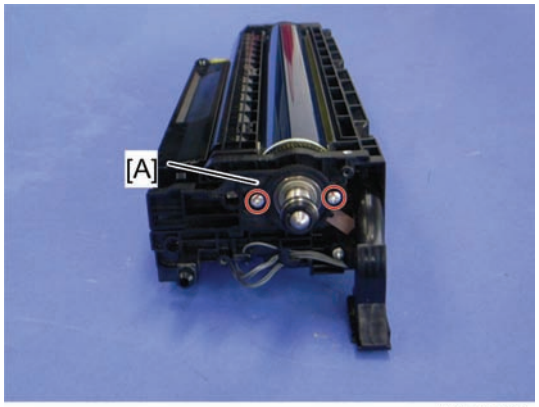

d027r123

6. Remove the front joint [A] (x 2, x 1).

Note

- The front joint [A] is firmly set. Remove it with a flat screwdriver.

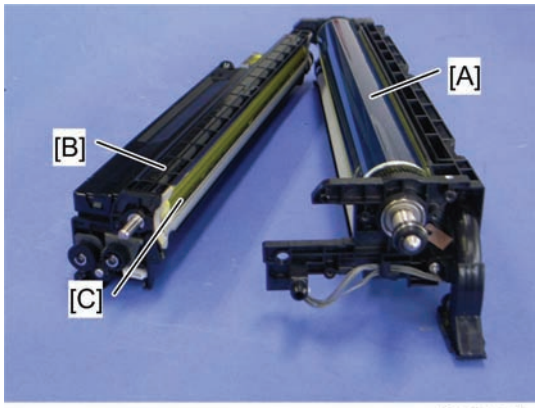

d027r124

7. Drum unit [A] and Development Unit [B]

Note

- When the development unit is removed from the drum unit, clean the entrance mylar [C] with a vacuum.

WWW.SERVICE-MANUAL.NET

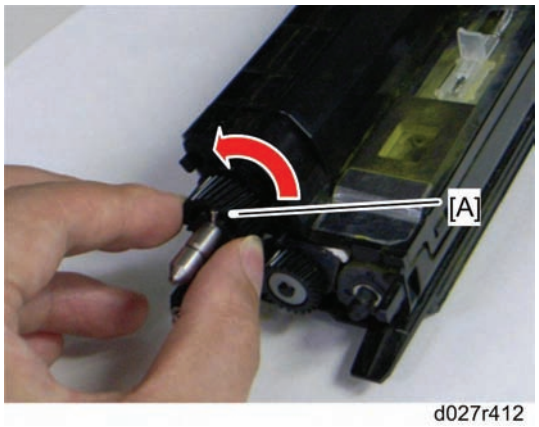

8. Rotate the development roller [A] five or six times in the counterclockwise direction.

Note

- This step removes developer that has stuck to the development roller, which would cause color unevenness.

9. If you change the development unit, do the ACC procedure.
10. Execute the drum phase adjustment with SP1902-001 twice.

When reassembling the PCDU:

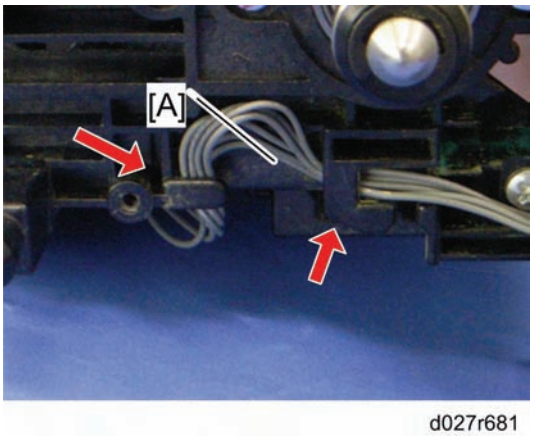

- Make sure that the harness [A] is hooked as shown.

Developer

1. Set SP 3902-xxx to "1".

   Black: 3902-005

   Yellow: 3902-006

   Cyan: 3902-007

   Magenta: 3902-008
2. Turn the machine power off.
3. Development unit (☛ p.4-42)

WWW.SERVICE-MANUAL.NET

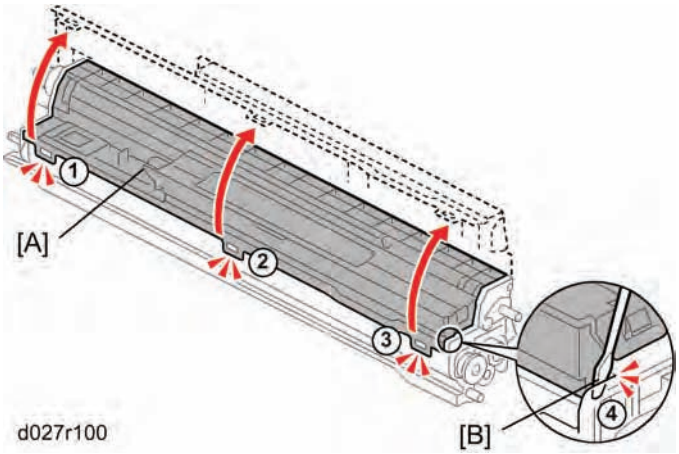

4. Hopper cover [A] (4 hooks)
   - Release the three hooks first in the correct order (from ① to ③).
   - Put the head of a screwdriver in the groove gap [B] as shown, and then release the hook ④.

⚠CAUTION

- Follow the correct order ① to ④. Otherwise, the hopper cover may be damaged. The hook ④ breaks easily.

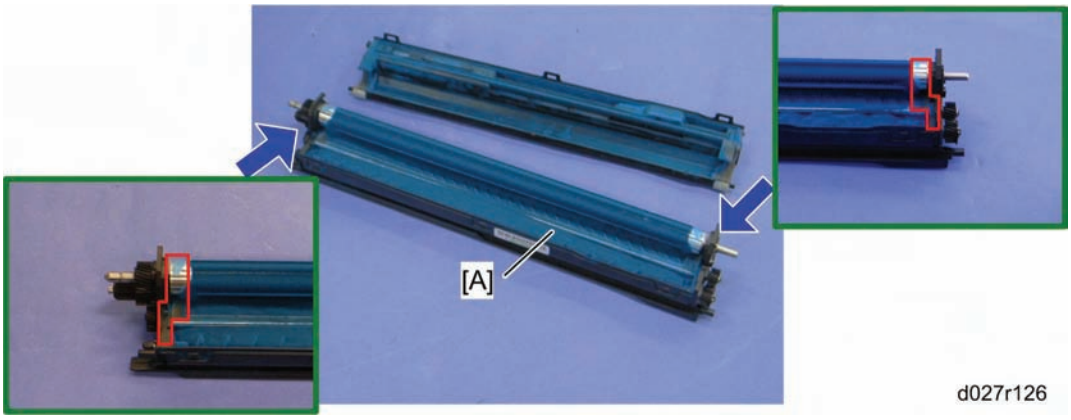

5. Shake a bag of developer and pour it into the development hopper [A].
6. Reattach the hopper cover (hook x 3).

⚠CAUTION

- Keep the developer off at both ends of the development unit enclosed in red lines in the diagram.

7. Turn the machine power on. The machine initializes the developer and resets the PM counter for the developer. (For details of the developer initialization result, see "Developer Initialization Result" in the "Appendix: Process Control Error Conditions" chapter.
8. Do the ACC procedure.

WWW.SERVICE-MANUAL.NET

4.7.3 TONER COLLECTION BOTTLE

If you will install a new bottle, and the old bottle is not in a full or near-full condition, then set SP 3902-017 to 1.

Note

- If you do this, then the machine will reset the PM counter for the bottle automatically, after you turn the power on again.
- If the bottle is in a full or near-full condition, it is not necessary to do this.

1. Turn off the main power switch.

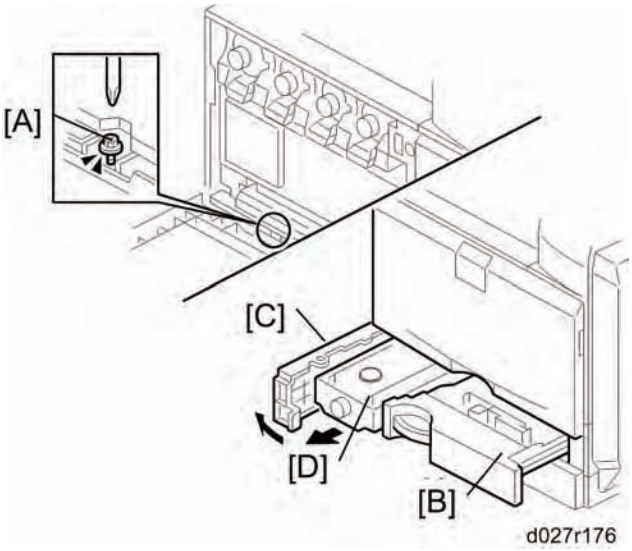

2. Open the front door and remove the screw [A].
3. Close the front door.
4. Pull out tray 1 [B].
5. Open the toner collection bottle door [C].
6. Pull out the toner collection bottle [D].

4.7.4 SECOND DUCT FAN

1. Rear cover (☛ p.4-15)
2. Right rear cover (☛ p.4-16)
3. Open the controller box (☛ p.4-131 "Controller Box")

WWW.SERVICE-MANUAL.NET

d027r127

4. Second duct [A] (x 2, x 1, x 2)

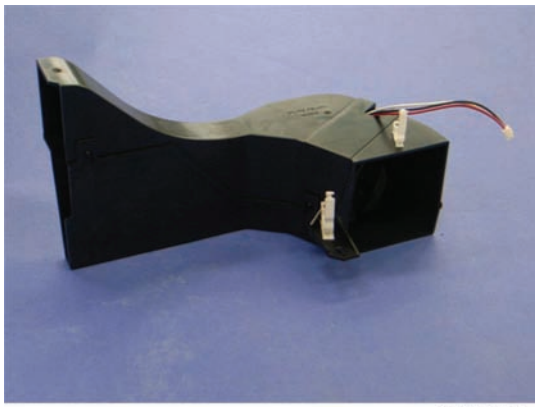

d027r128

5. Split the second duct (4 hooks).

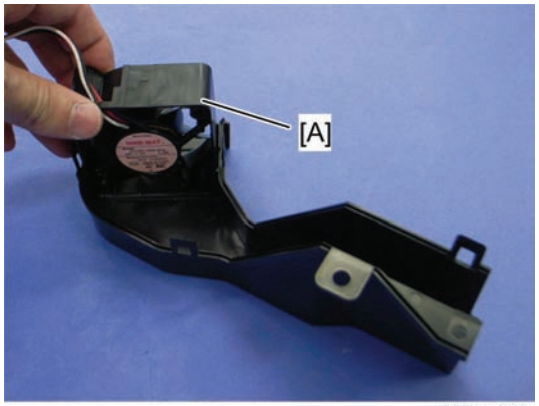

d027r129

6. Second duct fan [A]

When reinstalling the second duct fan

Make sure that the second duct fan is installed with its decal facing to the front of the machine.

WWW.SERVICE-MANUAL.NET

4.7.5 THIRD DUCT FAN

1. Rear cover (☛ p.4-15)
2. Right rear cover (☛ p.4-16)
3. Open the controller box (☛ p.4-131 "Controller Box")

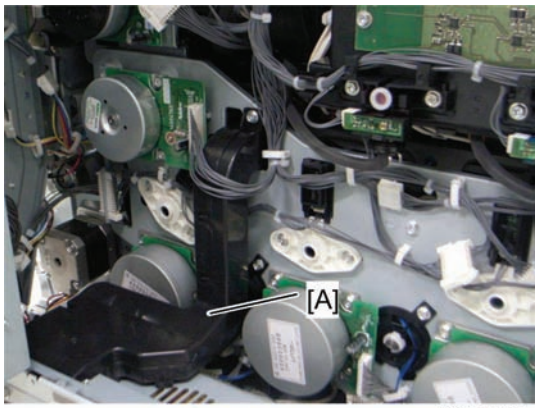

d027r130

4. Third duct [A] (☞ x 2, ☞ x 1)

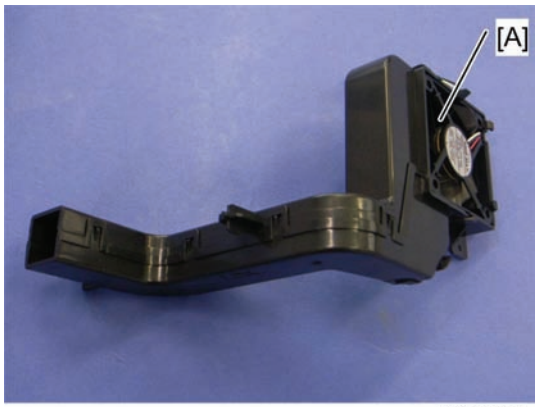

d027r131

5. Third duct fan [A] (3 hooks)

When reinstalling the third duct fan

Make sure that the third duct fan is installed with its decal facing to the upper side of the machine.

WWW.SERVICE-MANUAL.NET

4.7.6 TONER PUMP UNIT

There are four pump units inside the machine. This procedure describes the replacement procedure only for one unit. If you need to replace another unit, do the same as this procedure.

Note

- Put some sheets of paper on the floor before doing this procedure. Toner may fall on the floor.

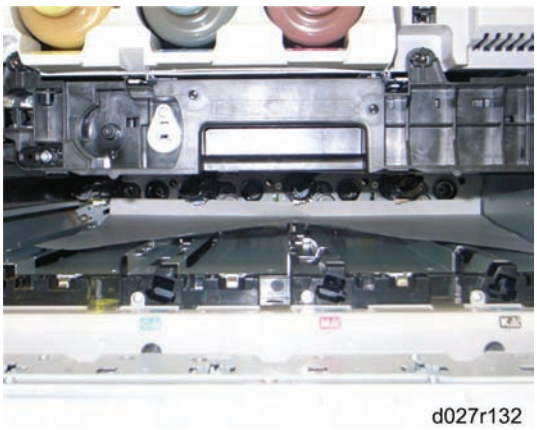

d027r132

1. Rear cover (☛ p.4-15)
2. Image transfer belt unit (☛ p.4-55)
3. All PCDUs (☛ p.4-42)
4. Put a sheet of paper (A3/DLT) inside the machine as shown and on the floor.

   Note

   - The sheet of paper on the floor is used in a later step.

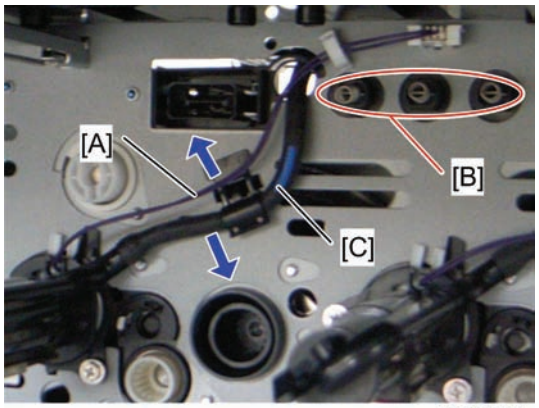

d027r134

5. Release the harness [A] from the clamp (☏ x 1 for YCM, ☏ x 2 for K) and hook, and then disconnect the harness.

   Note

   - Avoid touching these spring terminals [B].
6. Release the toner supply tube [C].

WWW.SERVICE-MANUAL.NET

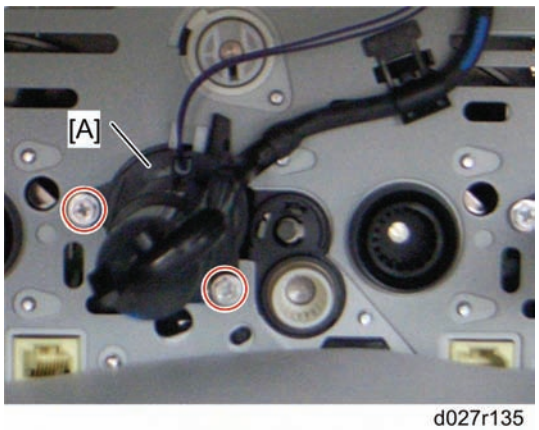

d027r135

7. Remove the toner pump unit [A] (x 2)

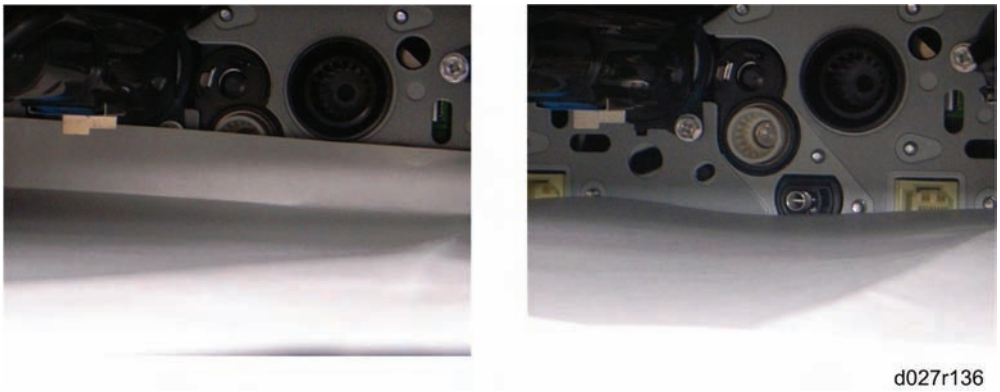

d027r136

- Make sure that a sheet of paper is attached to the frame of the rear side. The picture on the left shows a sheet of paper that is correctly set, but the picture on the right shows a sheet of paper that is not correctly set. This sheet of paper prevents toner and screws from falling into the laser optics housing unit through cutouts.

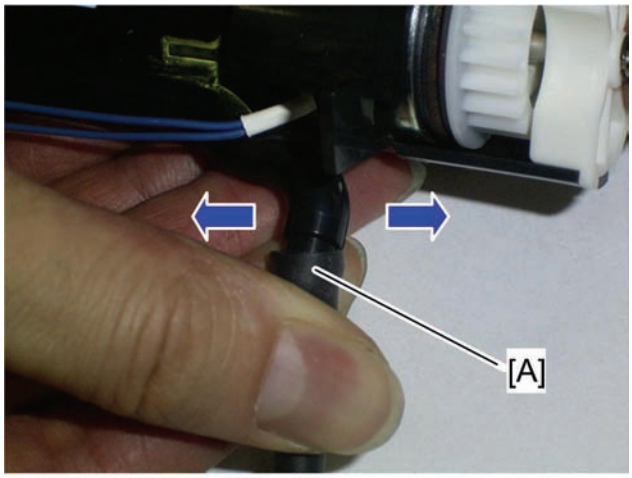

d027r705

8. Slowly remove the toner supply tube [A] from the toner pump unit by pulling the tube right and left.
9. Turn up the openings of the toner pump unit and toner supply tube just after removing the tube.

WWW.SERVICE-MANUAL.NET

Note

- If not, the toner may scatter away and fall down.

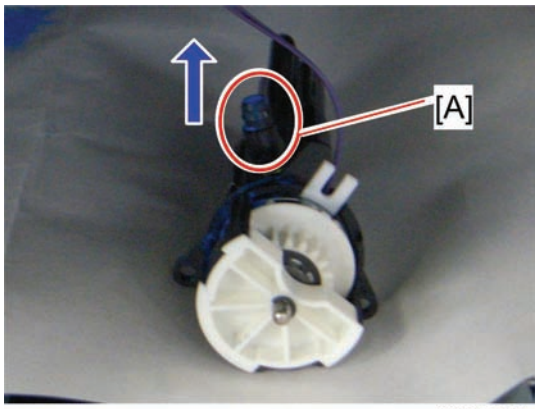

d027r137

10. Put the toner pump unit on the sheet of paper, which has been put in step 4, with its opening [A] up.

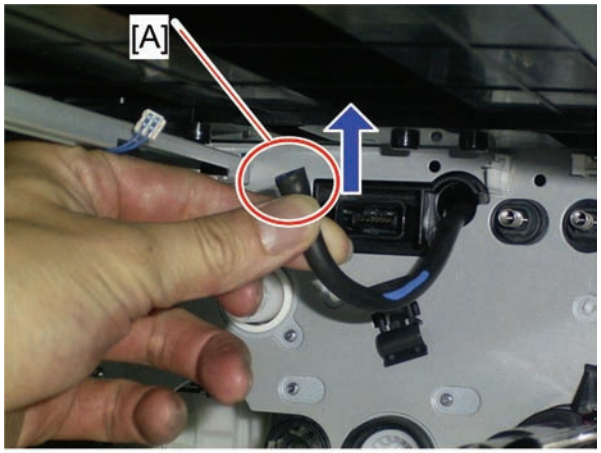

d027r707

11. Keep the opening [A] of the toner supply tube up, and then clip the opening of the toner supply.

When you install the new toner pump unit

Before installing the new toner pump unit, mask the opening of the old toner pump unit with tape. Dispose of it following local rules.

WWW.SERVICE-MANUAL.NET

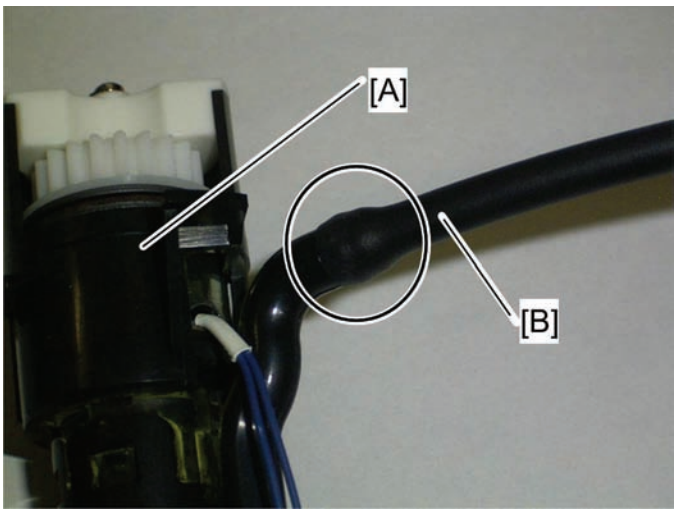

1. Put a sheet of paper (A3/DLT) inside the machine.
2. Turn up the opening of the toner supply tube, and then remove the object that was used to clip the opening of the toner supply tube.
3. Insert the opening of the toner pump unit [A] into the opening of the toner supply tube [B] as far as possible.

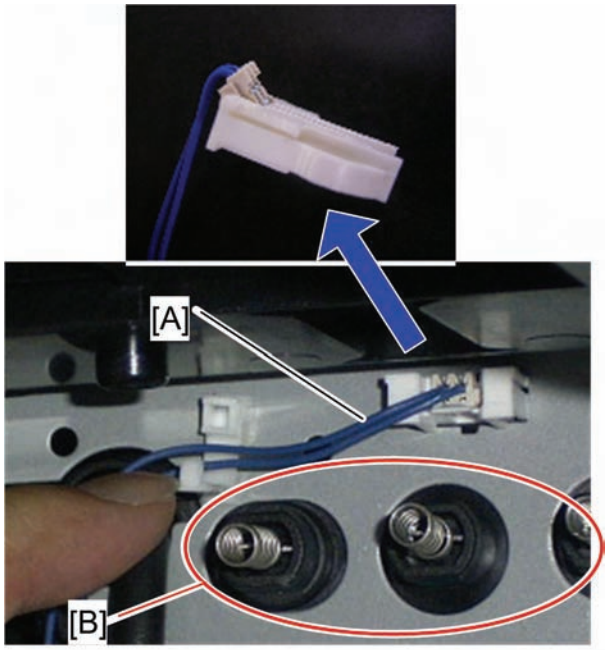

d027r709

4. Connect the harness [A] to the connector of the machine.

Note

- On the above picture, the magnified picture of the connector shows the easiest way to connect it.

5. Clamp the harness [A] (x 1 for YCM, x 2 for K).

Note

- Avoid touching these spring terminals [B].

WWW.SERVICE-MANUAL.NET

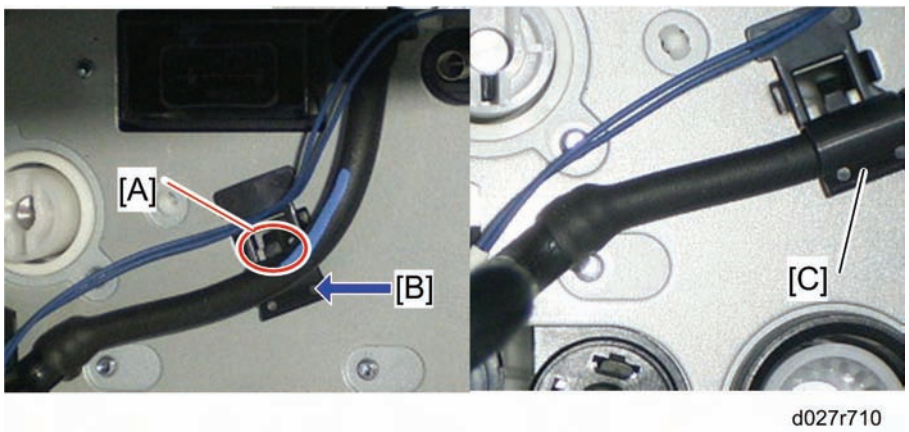

6. Pass the harness of the toner pump unit behind the hook [A], while pressing at [B].
7. Secure the toner supply tube with the holder [C], lifting up the edge of the holder "very gently".

Note

- Be careful when you lift the edge of the holder, because the holder is easily broken.

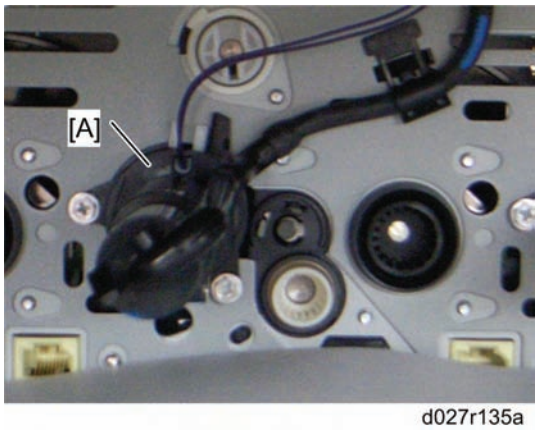

8. Insert the toner pump unit [A] into the rear frame of the machine (x 2).

WWW.SERVICE-MANUAL.NET

4.7.7 TONER END SENSOR

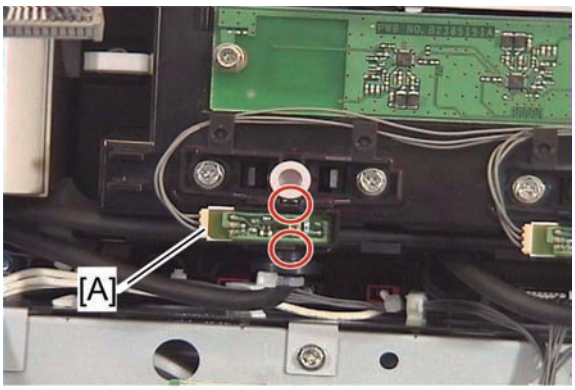

d027r042

1. Rear cover (☛ p.4-15)
2. Open the controller box (☛ p.4-131 "Controller Box")
3. Toner end sensor [A] (☶ x 1, 2 hooks each)

Note

- A toner end sensor is not installed in the entrance of the toner supply tube for black.

WWW.SERVICE-MANUAL.NET

4.8 IMAGE TRANSFER

4.8.1 IMAGE TRANSFER BELT UNIT

1. Open the right door.
2. Open the front door.
3. Open the drum positioning plate. (☛ p.4-42 "PCDU")

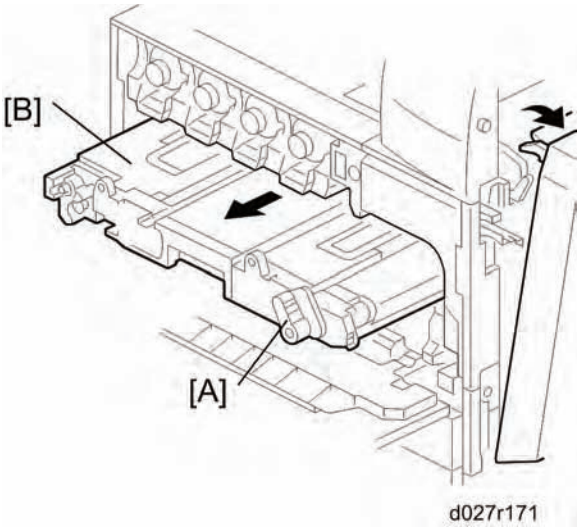

4. Turn the image transfer belt unit lock lever [A] counterclockwise.
5. Pull out the image transfer belt unit [B] halfway.

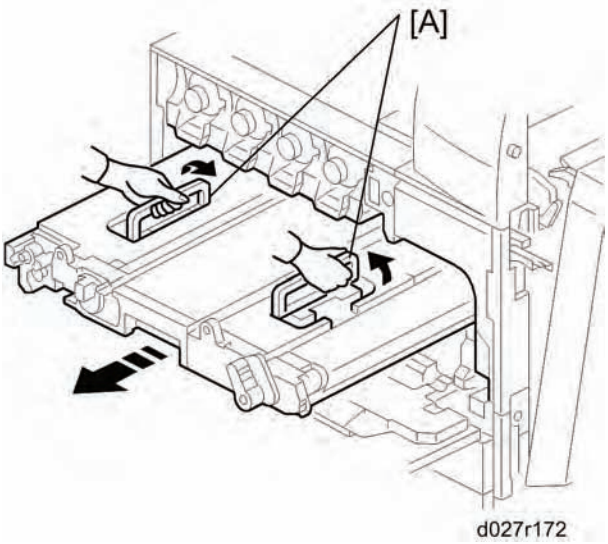

6. Grasp the handles [A], and then pull out the image transfer belt unit fully.

WWW.SERVICE-MANUAL.NET

4.8.2 IMAGE TRANSFER BELT CLEANING UNIT

1. If you will install a new belt cleaning unit, then set SP 3902-015 to 1.

   Note

   - If you do this, then the machine will reset the PM counter for the belt cleaning unit automatically, after you turn the power on again.
   - Do not use SP3902-015 or 013 if you replace the complete ITB unit.
2. Turn off the main power switch.
3. Open the right door.
4. Open the front door.
5. Open the drum positioning plate. (☛ p.4-42 "PCDU")

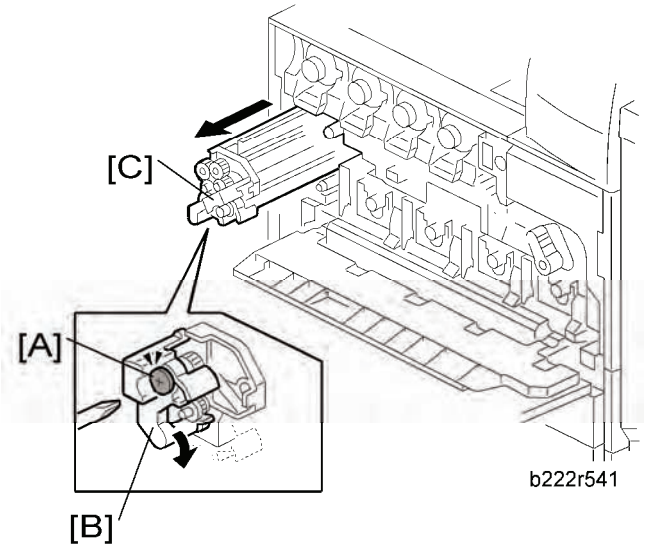

6. Loosen the screw [A].
7. Turn the lock lever [B] clockwise
8. Pull out the image transfer belt cleaning unit [C].

WWW.SERVICE-MANUAL.NET

4.8.3 IMAGE TRANSFER BELT

1. Image transfer belt cleaning unit (☛ p.4-55)
2. Image transfer belt unit (☛ p.4-55)

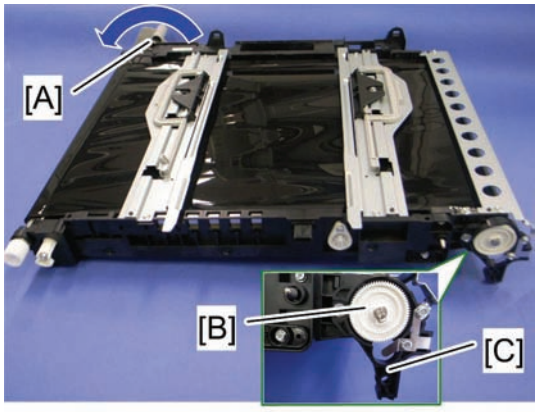

d027r138

3. Turn the image transfer unit contact lever [A] counterclockwise (as seen from the rear).
4. Gear [B] (hook x 1)
5. Turn the gear cover [C] clockwise (as seen from the rear) (x 1).

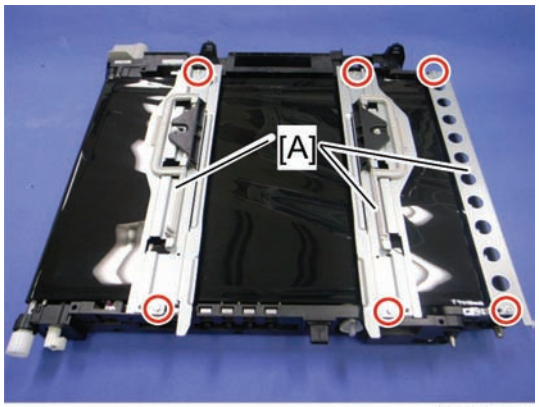

d027r139

6. Three stays [A] (x 6)

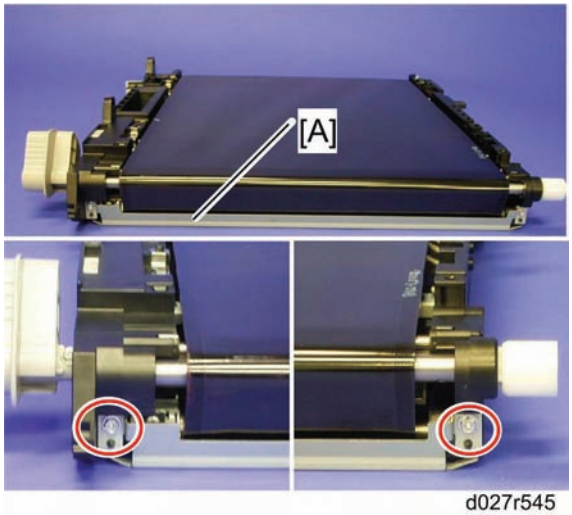

d027r545

7. Guide plate [A] (as seen from the right side of the machine) (x 2)

WWW.SERVICE-MANUAL.NET

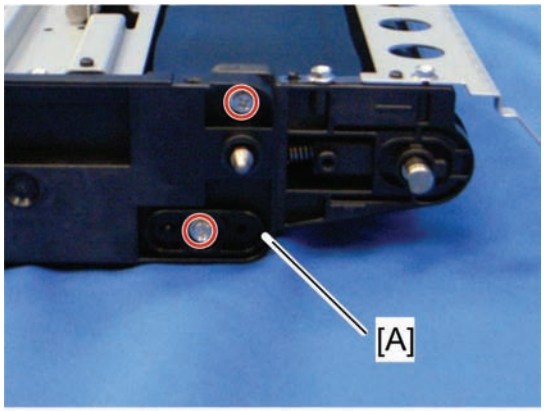

d027r545a

8. Remove the two screws and then the rear holder bracket [A] (as seen from the rear).

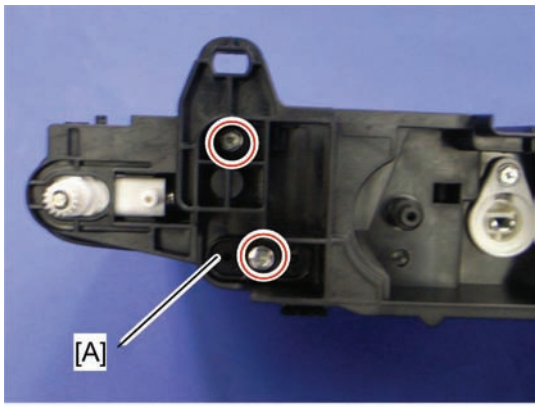

d027r140

9. Remove the two screws and then the front holder bracket [A] (as seen from the front).

b222r548

10. Put the front side of the image transfer belt unit on a corner of the table or a box as shown.

WWW.SERVICE-MANUAL.NET

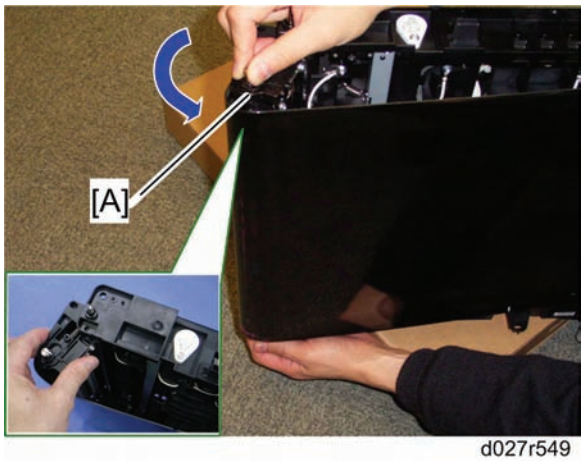

11. Pull the tension roller [A] as shown.

12. Image transfer belt [A]

When reinstalling the image transfer belt

- Clean all rollers with dry cloth before installing the image transfer belt.

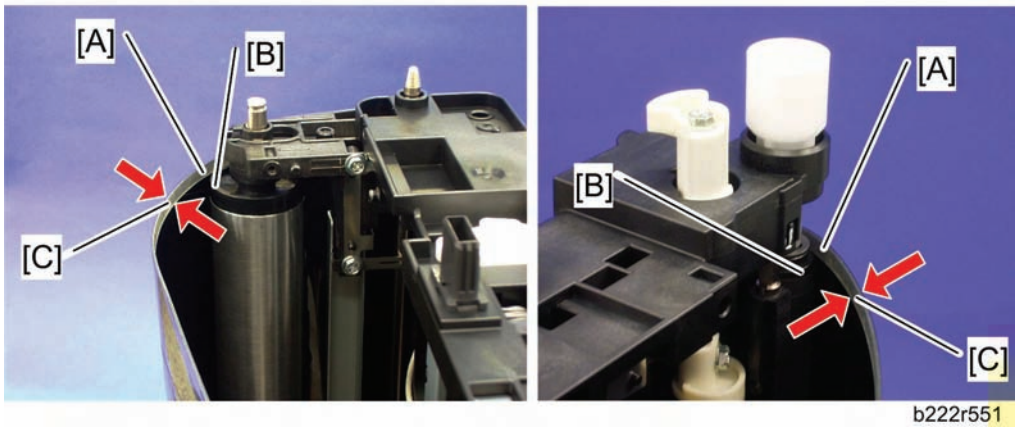

- There is a rim [A] at each edge of the transfer belt. The ends of all the rollers ([B] for example) in the transfer belt unit must be between the two rims.

WWW.SERVICE-MANUAL.NET

Note

- There are two rims (width [C]: about 5 mm) on the underside of the front and rear edges of the image transfer belt.

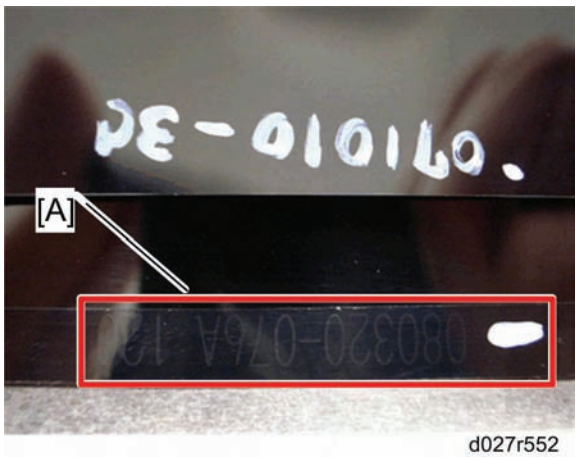

- This belt must be installed the correct way around. When you reinstall the image transfer belt unit, install it with the number [A] on the belt at the rear side of the unit.

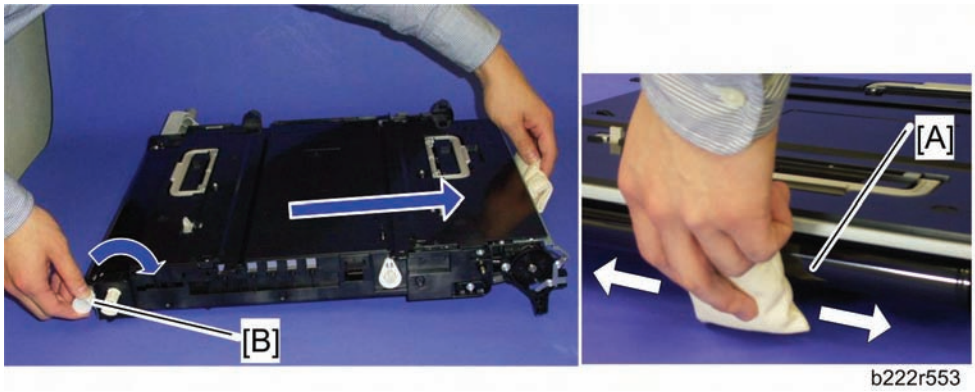

- Put "Lubricant Powder" (B132 9700) on the surface of the image transfer belt [A], while you turn the drive gear [B] at a constant speed, as shown. (The straight arrow in the picture shows belt movement direction.) Lubricant powder prevents the image transfer cleaning blade from turning up.

Note

- Do not put the lubricant powder at the right side of the image transfer belt unit (the above picture is taken from the rear). Otherwise, lubricant powder may damage the encoder sensor.

WWW.SERVICE-MANUAL.NET

4.9 PAPER TRANSFER

4.9.1 PAPER TRANSFER ROLLER UNIT

If you will install a new paper transfer unit, then set SP 3902-016 to 1.

Note

- If you do this, then the machine will reset the PM counter for the paper transfer unit automatically, after you turn the power on again.

1. Open the right door.

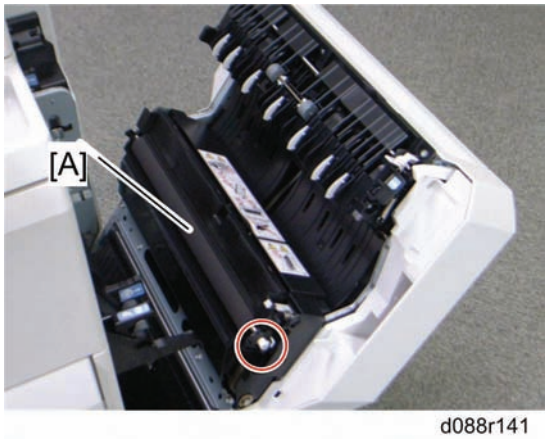

2. Release the white hook.
3. Paper transfer roller unit [A]

4.9.2 PAPER TRANSFER UNIT

If you will install a new paper transfer unit, then set SP3-902-016 to 1.

Note

- If you do this, then the machine will reset the PM counter for the paper transfer unit automatically, after you turn the power on again.

1. Turn off the main power switch.

WWW.SERVICE-MANUAL.NET

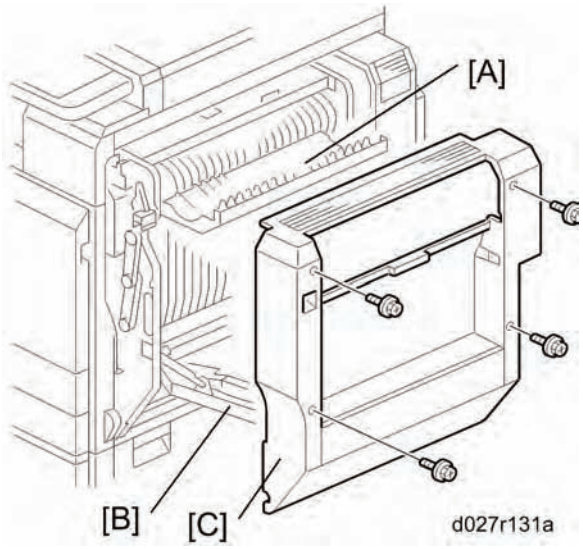

2. Open the duplex door [A].
3. Open the by-pass tray [B]
4. Right door cover [C] (x 4)
5. Open the right door.

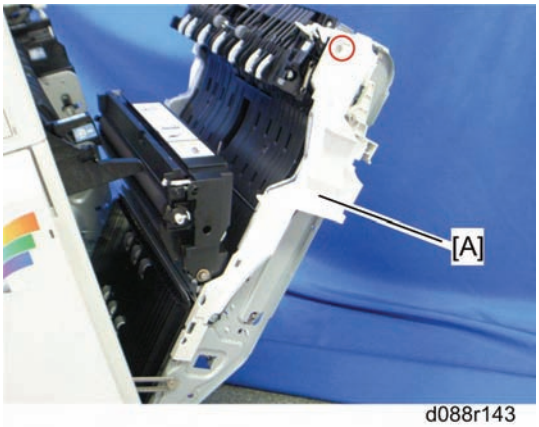

6. Right door inner cover [A] (x 1)

WWW.SERVICE-MANUAL.NET

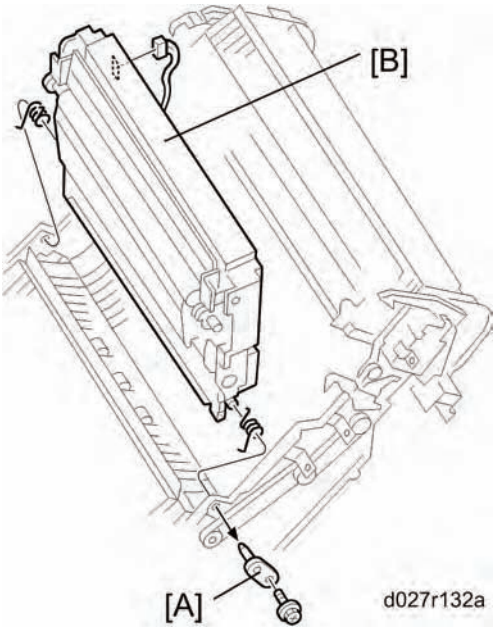

7. Pivot bracket [A] (x 1)
8. Paper transfer unit [B] (x 1, 2 springs)

4.9.3 ID SENSOR BOARD

1. K PCDU (p.4-42)
2. Open the right door.
3. Fusing unit (p.4-87)
4. Image transfer belt unit (p.4-55)

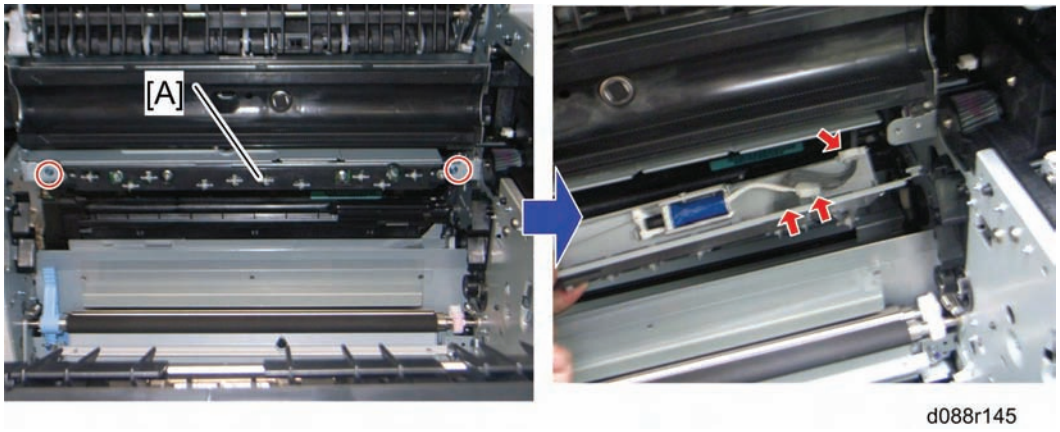

5. ID sensor unit [A] (x 2, x 2, x 1)

WWW.SERVICE-MANUAL.NET

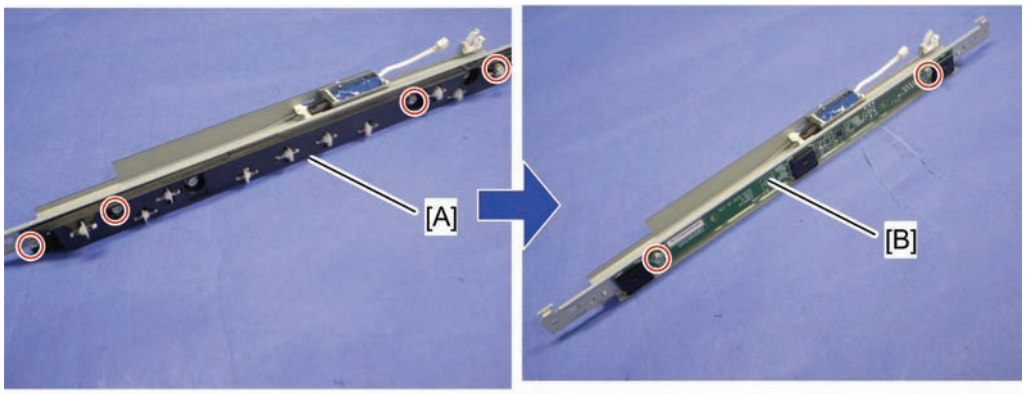

d088r146

6. ID sensor cover [A] (x 4)
7. ID sensor board [B] (x 2)

Cleaning for ID sensors

ID sensors require a cleaning procedure every EM. Do the following steps for ID sensor cleaning.

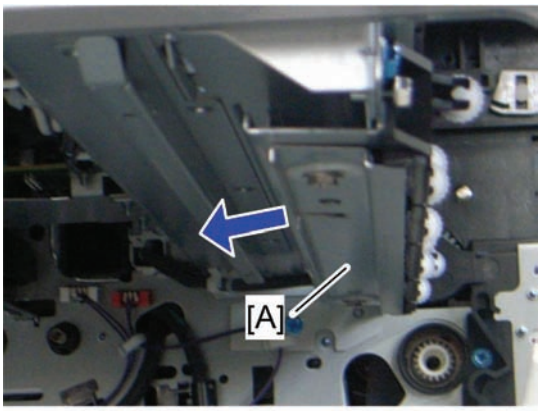

d027r147

1. K PCDU (☛ p.4-42)
2. Fusing unit (☛ p.4-87)
3. Image transfer belt unit (☛ p.4-55)
4. Slide the ID sensor shutter [A] to the left side.
5. Clean the ID sensors keeping the ID sensor shutter to the left.

After installing a new ID sensor unit/board

Do the following adjustment after installing a new ID sensor unit/board.

1. Plug in and turn on the main power switch of the copier.
2. Enter the SP mode.

WWW.SERVICE-MANUAL.NET

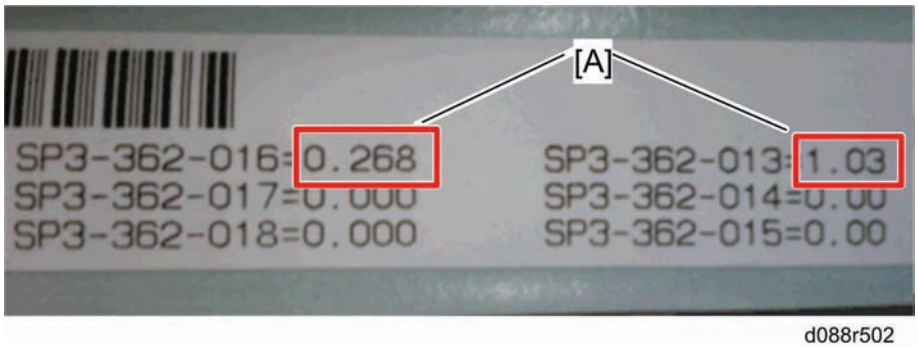

3. Input two correction coefficients [A] for the ID sensor with SP3-362-013 and SP3-362-016 on the barcode sheet provided with the new ID sensor unit/board.

Note

- For example, input "**1.03**" with SP3-362-013.
- SP numbers other than SP3-362-013 and -016 are not required for this procedure.

4. Exit the SP mode.

4.9.4 TEMPERATURE AND HUMIDITY SENSOR

1. Rear cover (☛ p.4-15)
2. Right rear cover (☛ p.4-16)

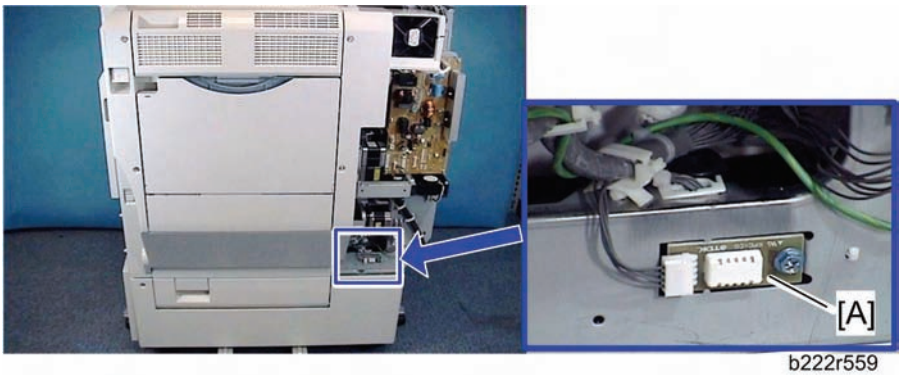

3. Temperature and humidity sensor [A] (x 1, x 1)

WWW.SERVICE-MANUAL.NET

4.10 DRIVE UNIT

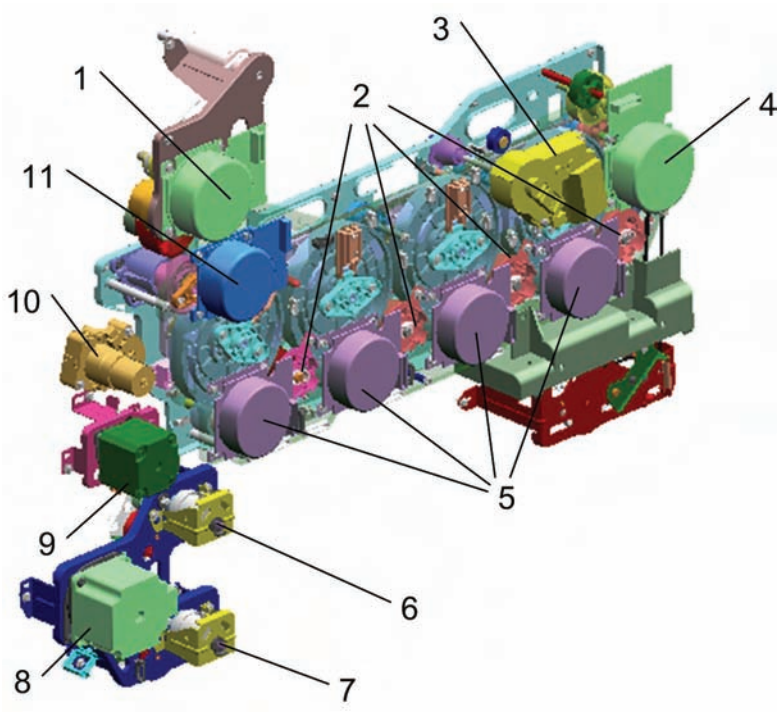

The drawing above shows the drive unit layout.

1. Fusing/paper exit motor 2. Development clutches 3. Image transfer belt contact motor 4. Toner transport motor 5. Drum/Development drive motors 6. Paper feed clutch – Tray 1	7. Paper feed clutch – Tray 2 8. Paper feed motor 9. Registration motor 10. Paper transfer contact motor 11. ITB drive motor

There are some motors and clutches that are not shown in the above drawing:

▪ Tray lift motor 1 and 2 ▪ Duplex inverter motor ▪ Duplex/By-pass Motor	▪ Junction gate 1 motor ▪ Shutter motor ▪ By-pass clutch

WWW.SERVICE-MANUAL.NET

4.10.1 GEAR UNIT

1. All PCU's
2. Image transfer belt unit (☛ p.4-55)
3. Rear cover (☛ p.4-15)
4. Controller box (☛ p.4-131)

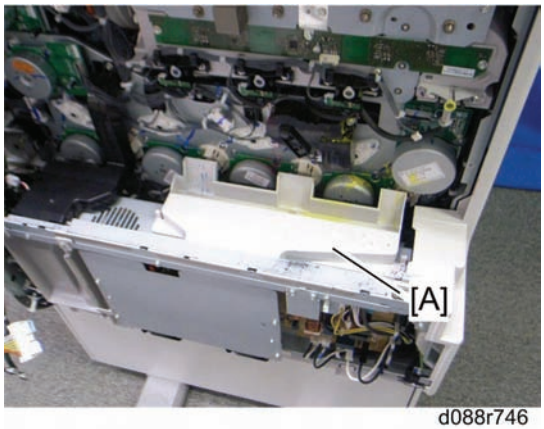

d088r746

5. Toner sump cover [A] (hooks)
6. Third duct (☛ p.4-48)
7. Left cover (☛ p.4-15)
8. PSU bracket (☛ p.4-135)

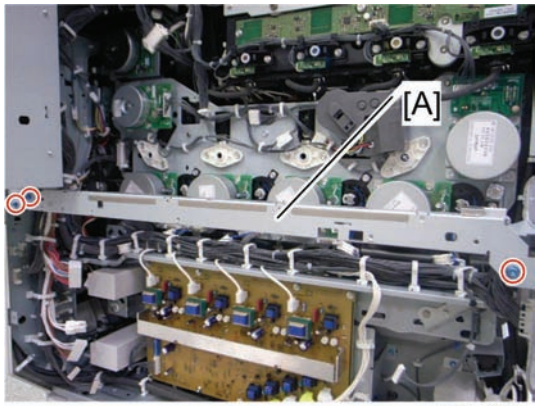

d027r148

9. Remove the rear stay [A] (x 3).

d027r149

WWW.SERVICE-MANUAL.NET

10. Remove ten clamps (blue arrows).

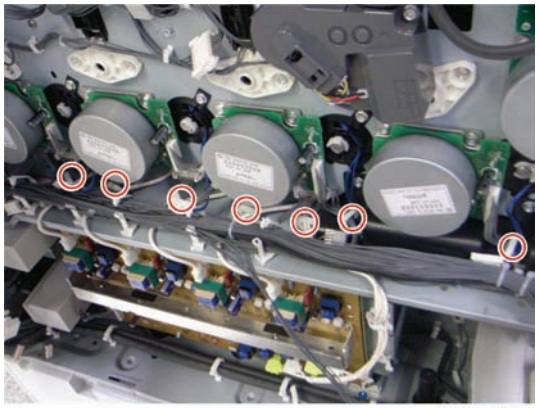

d027r150

11. Release seven clamps and turn each harness aside.

d027r151

12. Disconnect four connectors (red arrows).

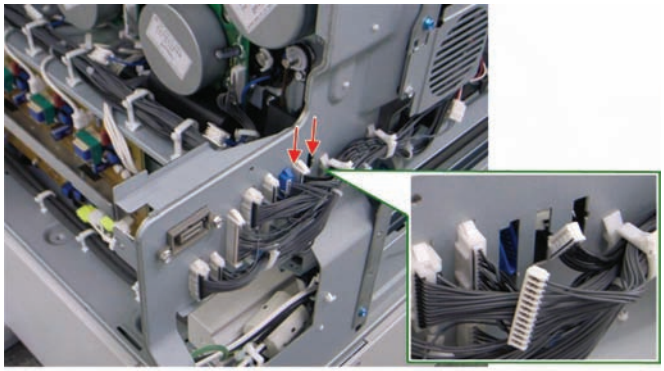

d027r152

13. Disconnect two connectors (red arrows) and put these harnesses inside the machine.

WWW.SERVICE-MANUAL.NET

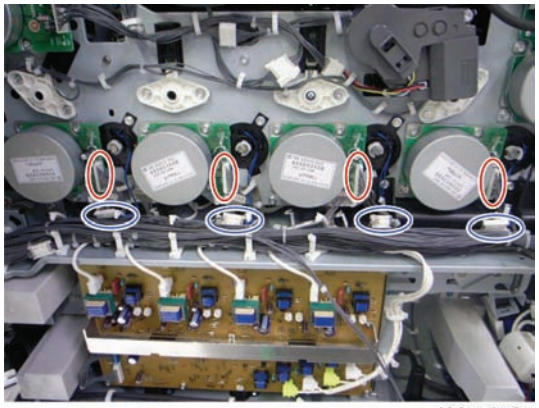

d027r153

14. Disconnect each connector (red circles) from the drum/development drive motors (x 1, x 1 each).
15. Disconnect each connector (blue circles) from the development clutches (x 1 each).

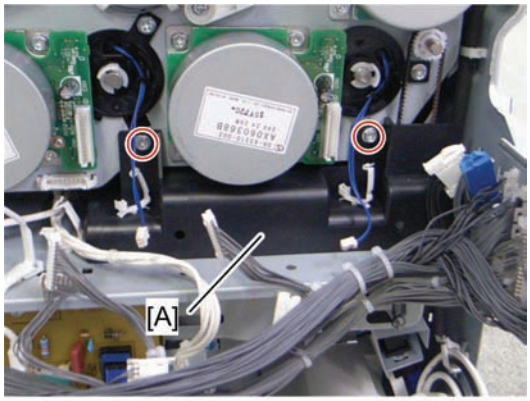

d027r155

16. Cover [A] (x 2)

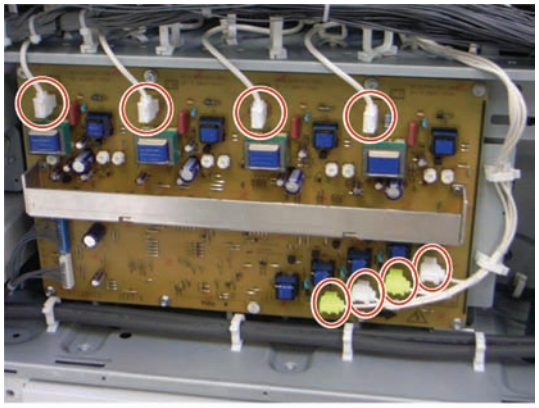

d027r156

17. Disconnect eight connectors from the high voltage supply board (x 8, x 2).

WWW.SERVICE-MANUAL.NET

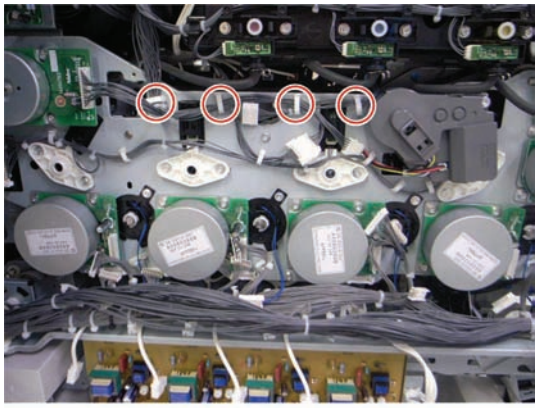

d027r157b

18. Release four clamps (red circles) and turn the harnesses aside.

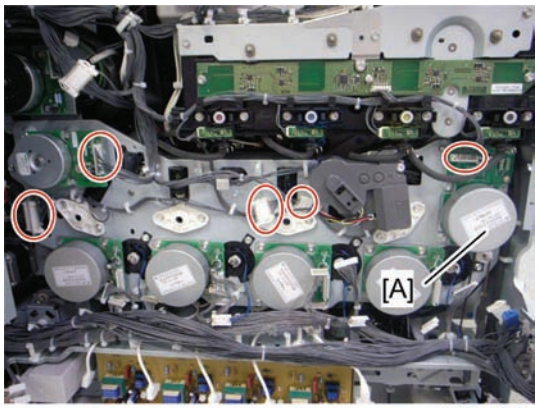

d027r158

19. Disconnect five connectors (red circles) (x 5).
20. Toner transport motor [A] (x 3)

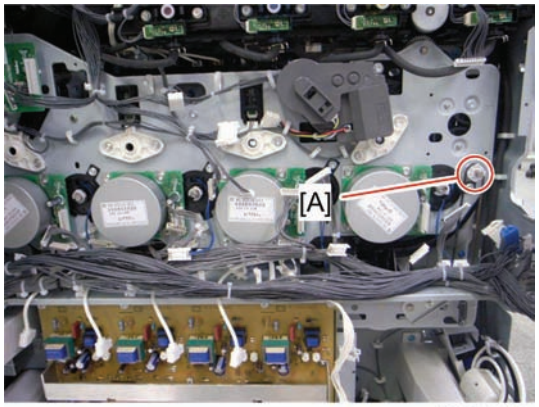

d027r159

21. Pulley [A] (timing belt)

WWW.SERVICE-MANUAL.NET

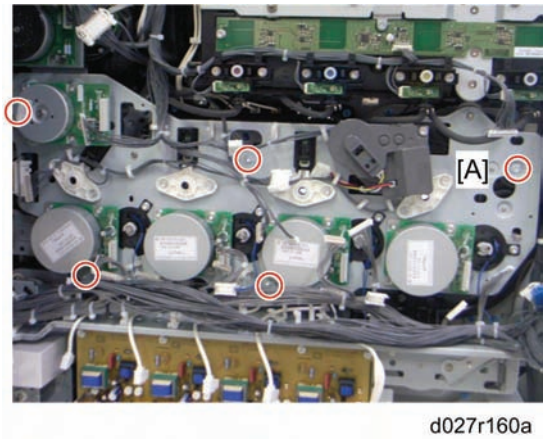

22. Gear unit [A] (x 8)

When installing the drive unit

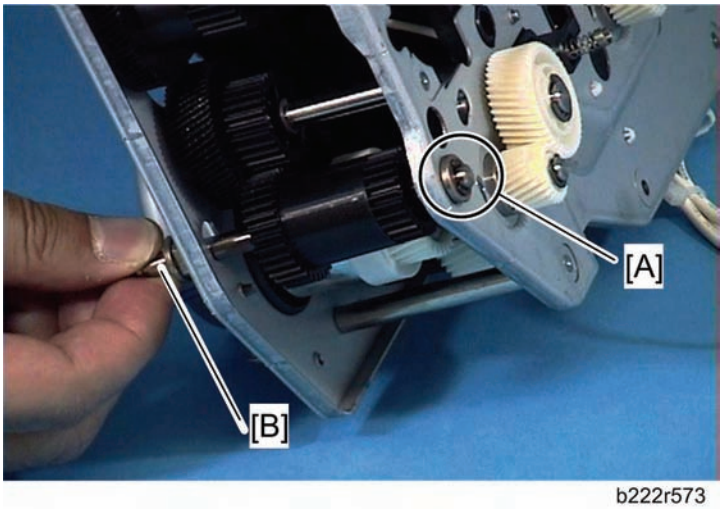

Make sure that the bushing [A] is fully set in the frame of the gear unit before installing the timing belt and pulley to the shaft [B].

WWW.SERVICE-MANUAL.NET

Adjustment after replacing the gear unit

Do the following procedures after replacing the gear unit.

1. Turn on the main power switch.
2. Enter "System SP" in the SP mode.
3. Do “Amplitude Control" with SP1-902-001.
4. Check the result of the Amplitude Control with SP1-902-002.

   0: Success, 2: Failure due to no sampling data,

   3: Failure due to insufficient number of pattern detections

   When the result of this adjustment is "2" or "3":

   - Check that all the PCUs are correctly set and that the image transfer belt unit is correctly set.
   - Do "Amplitude Control " again after checking the PCUs and image transfer belt unit.

   When the result is still "2" or "3" after checking the PCUs and image transfer belt unit:

   - Check that the gear unit is installed correctly.
5. Exit the SP mode.

WWW.SERVICE-MANUAL.NET

4.10.2 REGISTRATION MOTOR

1. Rear cover (☛ p.4-15)
2. Right rear cover (☛ p.4-16)
3. Ventilation duct (☛ p.4-135 "PSU")
4. Turn the harnesses aside (✍ x 5)

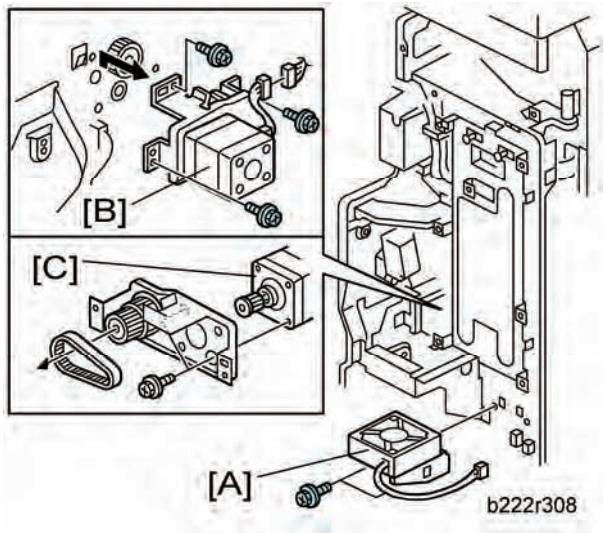

5. Fusing power supply board fan bracket [A] (x 2, x 1)
6. Registration motor assembly [B] (x 3, x 1)
7. Registration motor [C] (x 2, timing belt)

WWW.SERVICE-MANUAL.NET

4.10.3 PAPER FEED MOTOR

1. Rear cover (☛ p.4-15)
2. Right rear cover (☛ p.4-16)

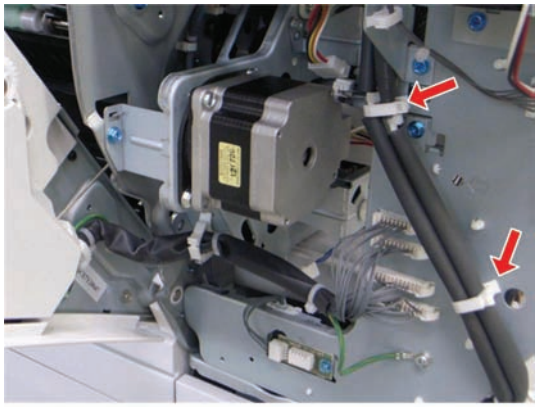

d027r161

3. Release the two clamps (🗎 x 2)

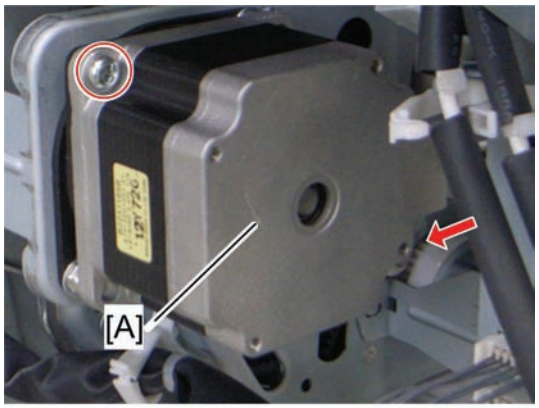

d027r162a

4. Paper feed motor [A] (🗎 x 1, 🔩 x 2, timing belt)

WWW.SERVICE-MANUAL.NET

4.10.4 DRUM/DEVELOPMENT MOTORS FOR M, C, AND Y

1. Rear cover (☛ p.4-15)
2. PSU bracket (☛ p.4-135 "PSU")
3. Open the controller box (☛ p.4-131 "Controller Box").

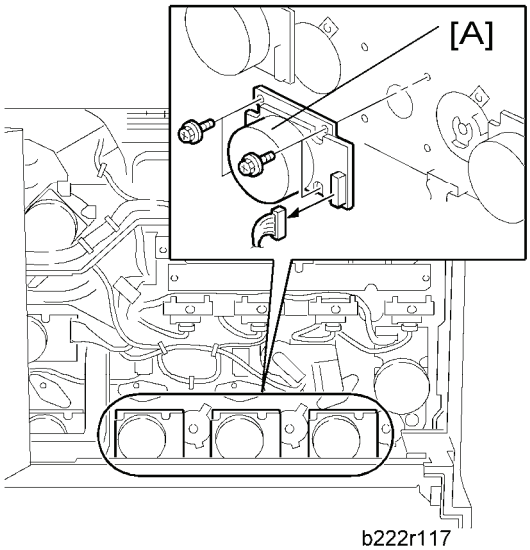

b222r117

4. Drum/Development motors (three motors, one each for MCY) [A] (x 4, x 1 each)

4.10.5 DRUM/DEVELOPMENT MOTOR-K

1. Rear cover (☛ p.4-15)
2. PSU bracket (☛ p.4-135)
3. Controller box (☛ p.4-131)

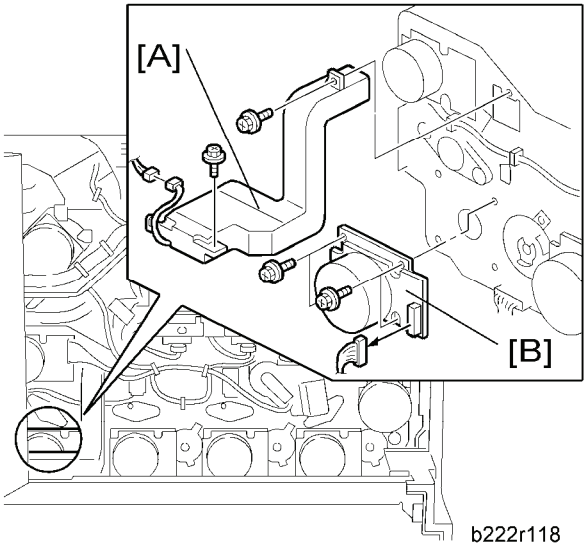

b222r118

4. Third duct [A] (x 2, x 1)
5. Drum/Development motor-K [B] (x 4, x 1)

WWW.SERVICE-MANUAL.NET

4.10.6 ITB DRIVE MOTOR

1. Rear cover (☛ p.4-15)
2. Controller box (☛ p.4-131)

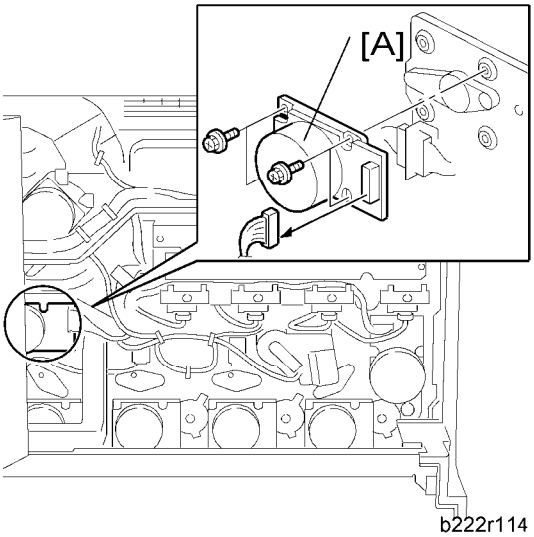

3. ITB drive motor [A] (x 4, x 1)

4.10.7 FUSING/PAPER EXIT MOTOR

1. Rear cover (☛ p.4-15)
2. Controller box (☛ p.4-131)

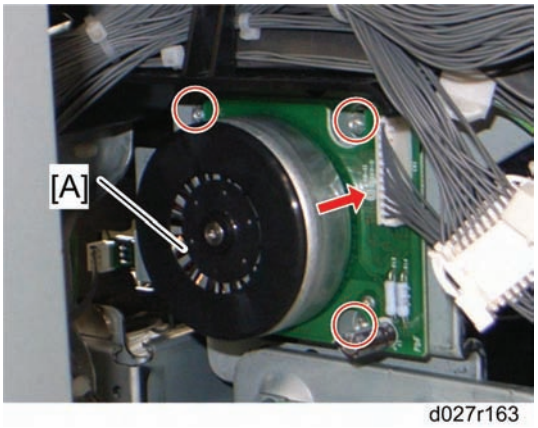

3. Fusing/paper exit motor [A] (x 3, x 1)

WWW.SERVICE-MANUAL.NET

4.10.8 IMAGE TRANSFER BELT CONTACT MOTOR

1. Rear cover (☛ p.4-15)
2. Controller box (☛ p.4-131)

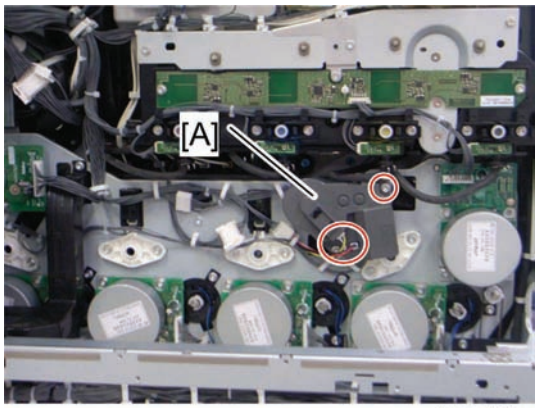

d027r164

3. Transfer belt contact motor [A] (x 2, x 2)

4.10.9 DUPLEX INVERTER MOTOR

1. Open the right door.
2. Right door cover (☛ p.4-117)

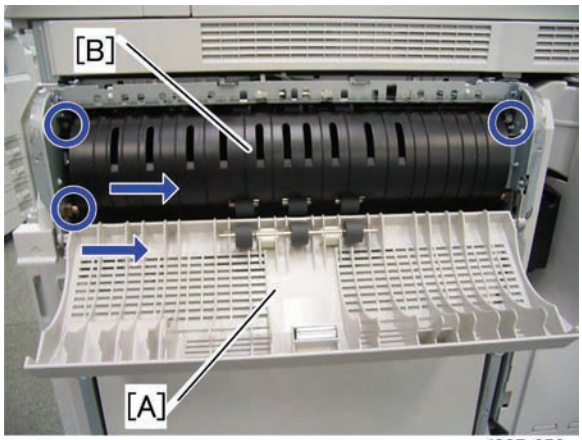

d027r659

3. Duplex door [A] (2 hooks)
4. Duplex guide plate [B] (x 3, 2 hooks)

WWW.SERVICE-MANUAL.NET

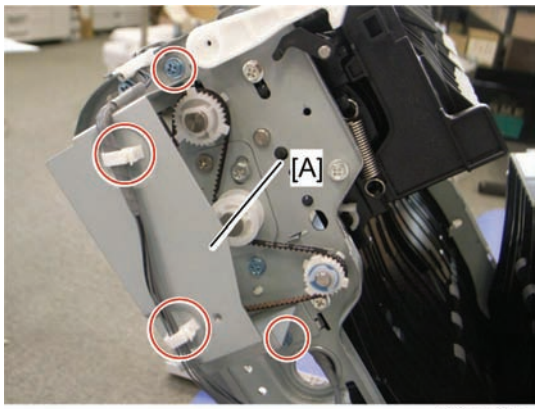

d027r166

5. Duplex inverter motor bracket cover [A] (x 2, x 2)

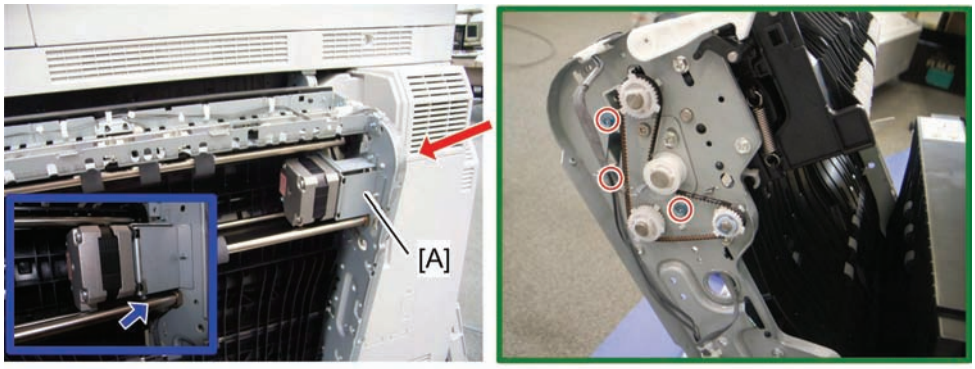

d027r660b

6. Duplex inverter motor bracket [A] (x 3, x 1, x 1)

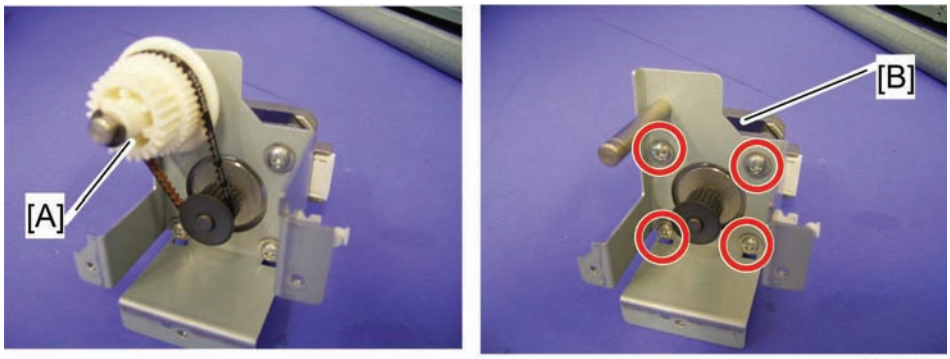

d027r661

7. Gear [A] (x 1, belt x 1)
8. Duplex inverter motor [B] (x 4)

WWW.SERVICE-MANUAL.NET

4.10.10 PRESSURE ROLLER CONTACT MOTOR

1. Rear cover (☛ p.4-15)
2. Right rear cover (☛ p.4-16)
3. Open the controller box (☛ p.4-131 "Controller Box")

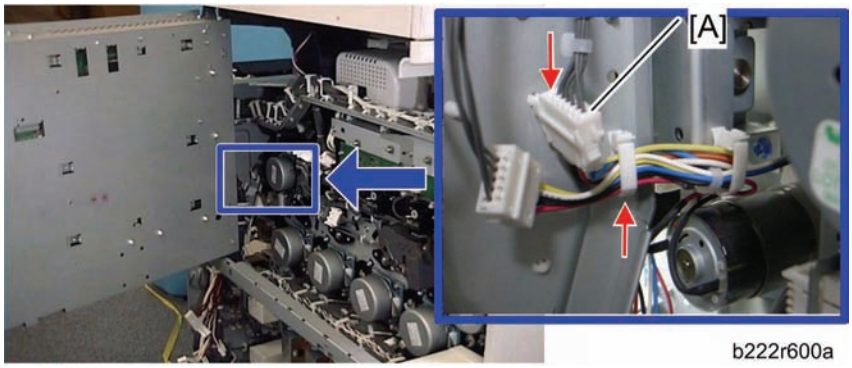

4. Disconnect the connector [A] (🔌 x 1).

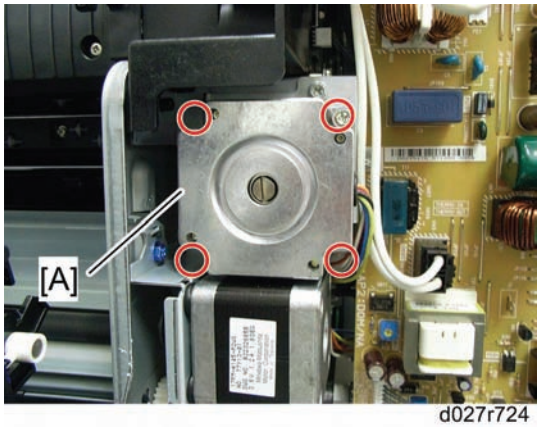

5. Pressure roller contact motor [A] (🔩 x 4)

WWW.SERVICE-MANUAL.NET

4.10.11 DUPLEX/BY-PASS MOTOR

1. Rear cover (☛ p.4-15)
2. Right rear cover (☛ p.4-16)
3. Open the controller box (☛ p.4-131 "Controller Box").
4. Pressure roller contact motor (☛ p.4-77)

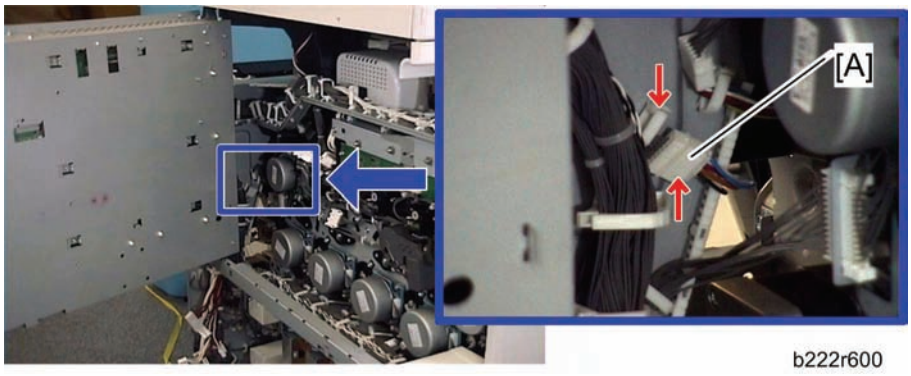

5. Disconnect the connector [A] (x 1, x 1)

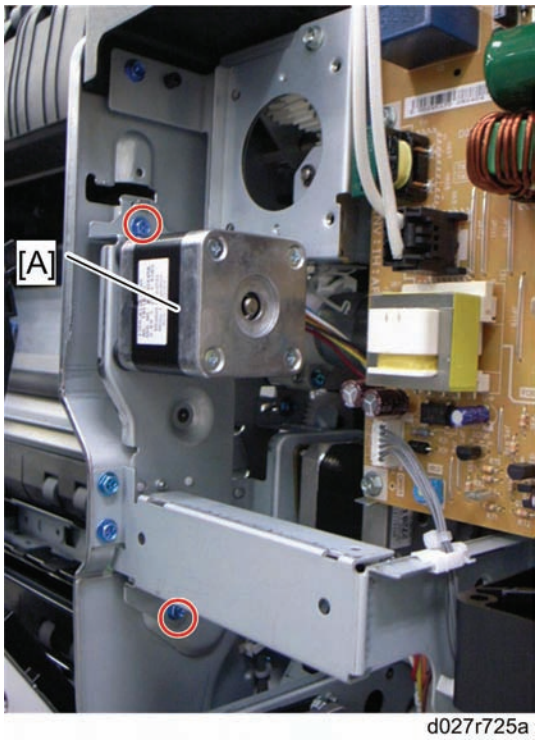

6. Duplex/by-pass motor bracket [A] (x 2)

WWW.SERVICE-MANUAL.NET

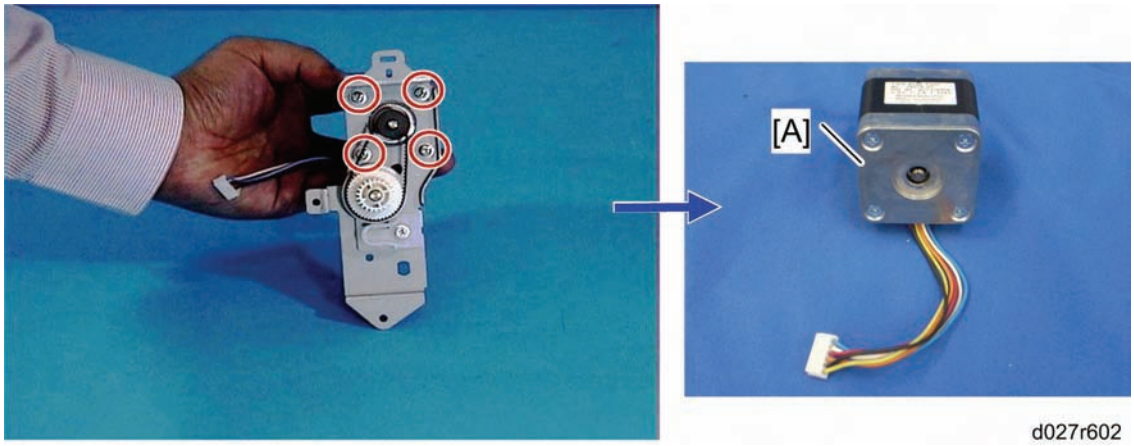

7. Duplex/by-pass motor [A] (x 4, belt x 1)

4.10.12 PAPER TRANSFER CONTACT MOTOR

1. Rear cover (p.4-15)
2. Right rear cover (p.4-16)
3. Open the controller box (p.4-131 "Controller Box").

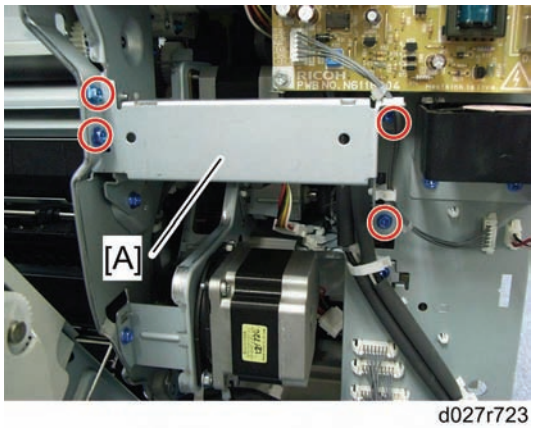

4. Stay [A] (x 4)
5. Pressure roller contact motor (p.4-77)
6. Duplex/by-pass motor bracket (p.4-78 "Duplex/By-pass Motor")

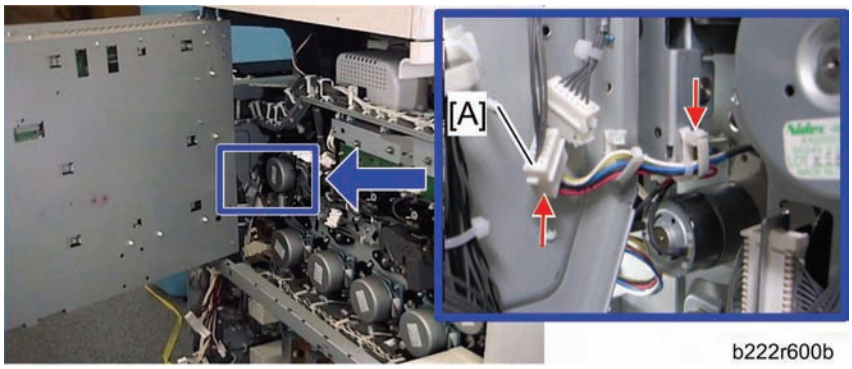

7. Disconnect the connector [A] (x 1)

WWW.SERVICE-MANUAL.NET

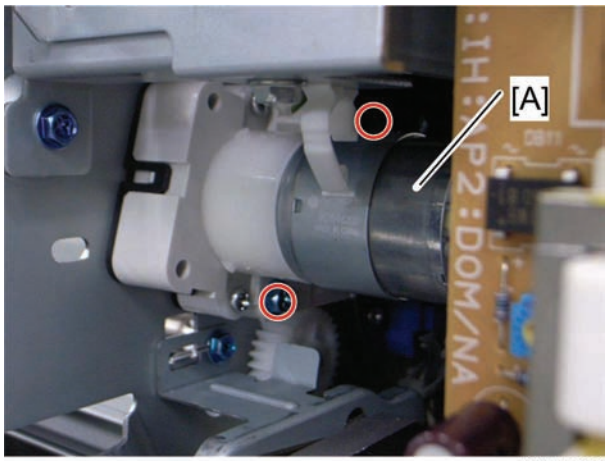

d027r726

8. Paper transfer contact motor [A] (x 2)

NOTE:

The picture below shows how to use the screwdriver to remove the screws of the paper transfer contact motor.

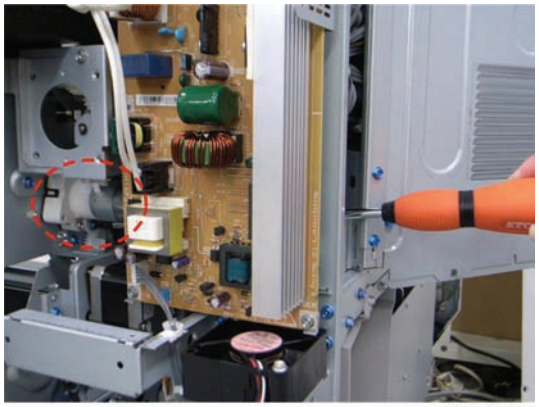

d027r727

WWW.SERVICE-MANUAL.NET

4.10.13 TONER TRANSPORT MOTOR

1. Rear cover(☛ p.4-15)
2. Open the controller box (☛ p.4-131 "Controller Box")

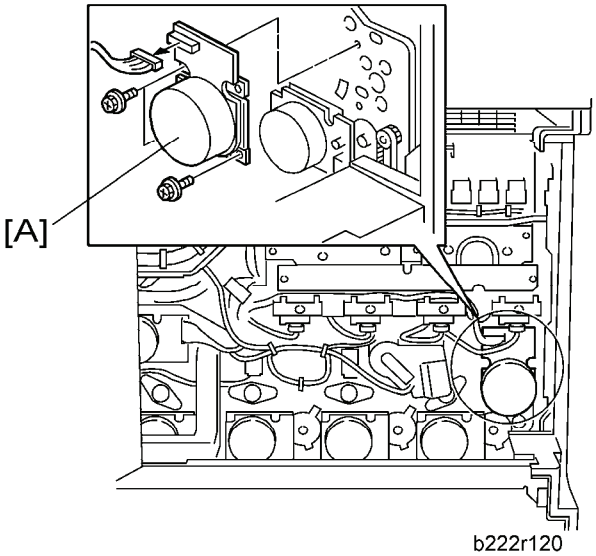

3. Toner transport motor [A] (x 3, x 1)

WWW.SERVICE-MANUAL.NET

4.10.14 TONER COLLECTION UNIT

1. Gear Unit (☛ p.4-66)

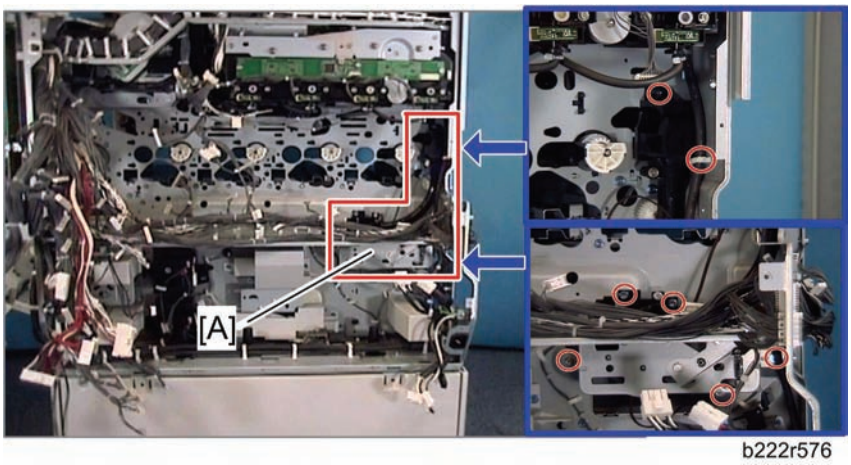

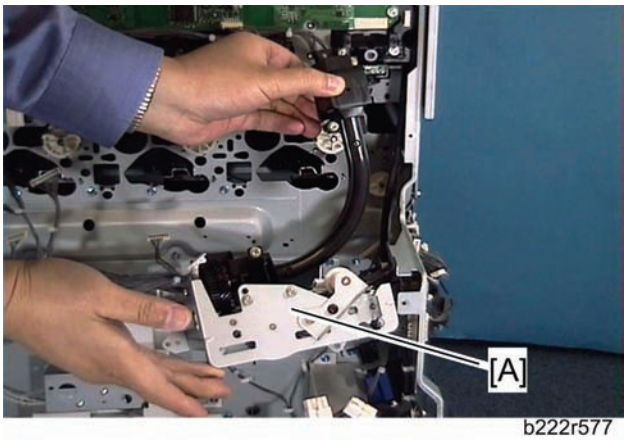

2. Toner collection unit [A] (x 6, x 1)

WWW.SERVICE-MANUAL.NET

4.10.15 PAPER FEED CLUTCHES

1. Rear cover (☛ p.4-15)
2. PSU bracket (☛ p.4-135 "PSU")

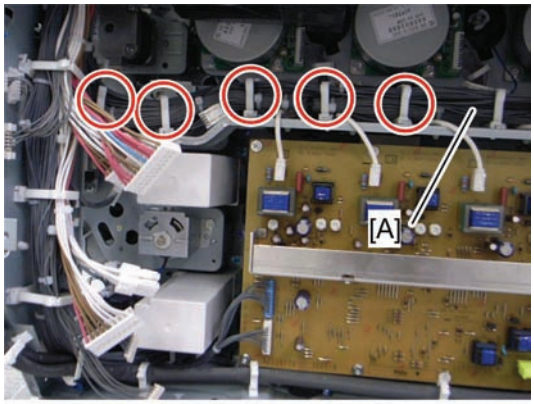

d027r578

3. Release five clamps, and then turn the harness [A] aside.

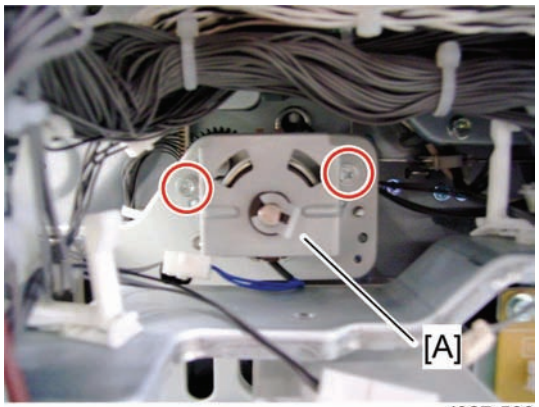

d027r580

4. Paper feed clutch 1 bracket [A] (x 2, x 1, x 1, x 1)

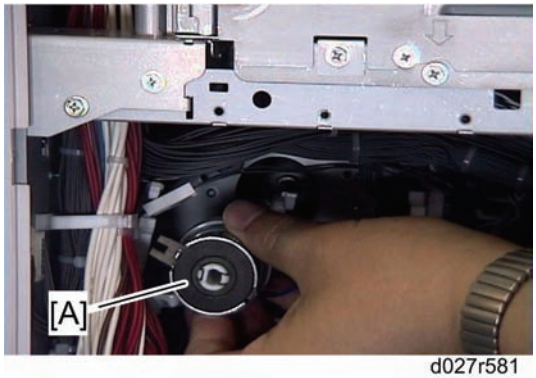

d027r581

5. Paper feed clutch 1 [A]

WWW.SERVICE-MANUAL.NET

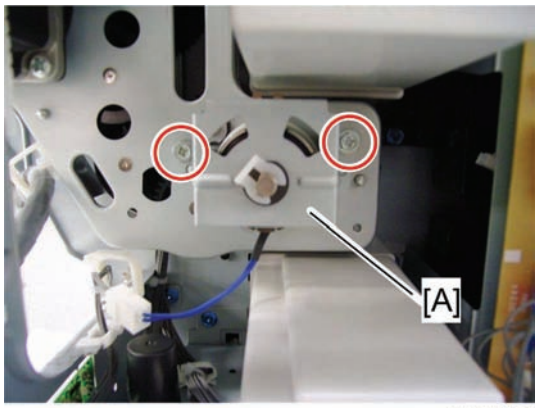

d027r582

6. Paper feed clutch 2 bracket [A] (x 2, x 1, x 1)

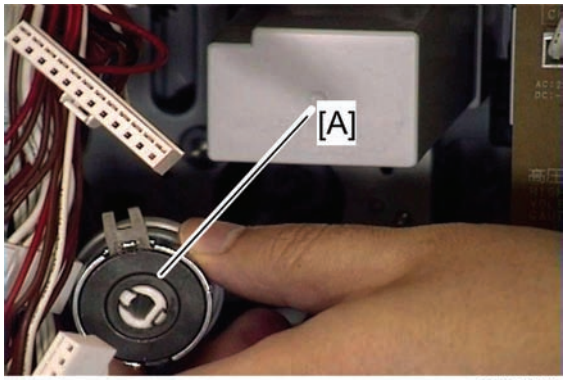

d027r583

7. Paper feed clutch 2 [A]

WWW.SERVICE-MANUAL.NET

4.10.16 DEVELOPMENT CLUTCH-Y

1. Rear cover (☛ p.4-15)
2. PSU bracket (☛ p.4-135 "PSU")
3. Open the controller box. (☛ p.4-131 "Controller Box").
4. Drum/development motor-Y (☛ p.4-73)

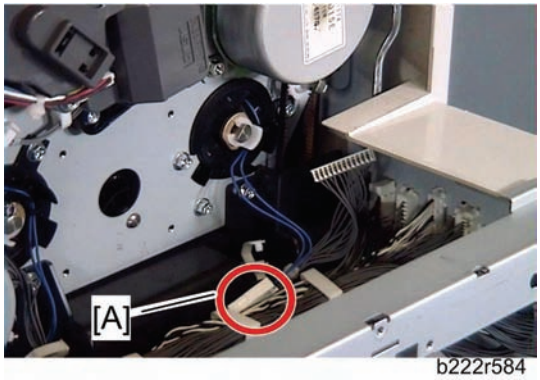

5. Disconnect the connector [A] (☞ x 1).

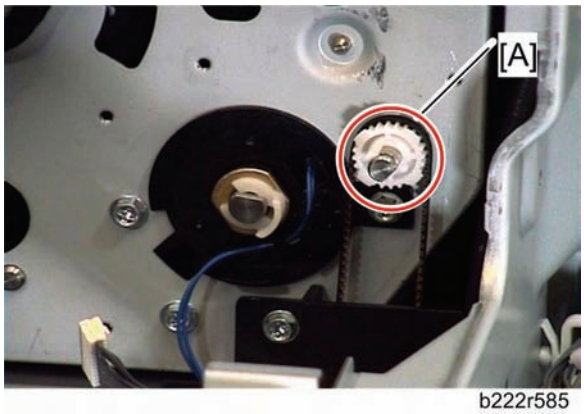

6. Remove the pulley and bushing [A].

WWW.SERVICE-MANUAL.NET

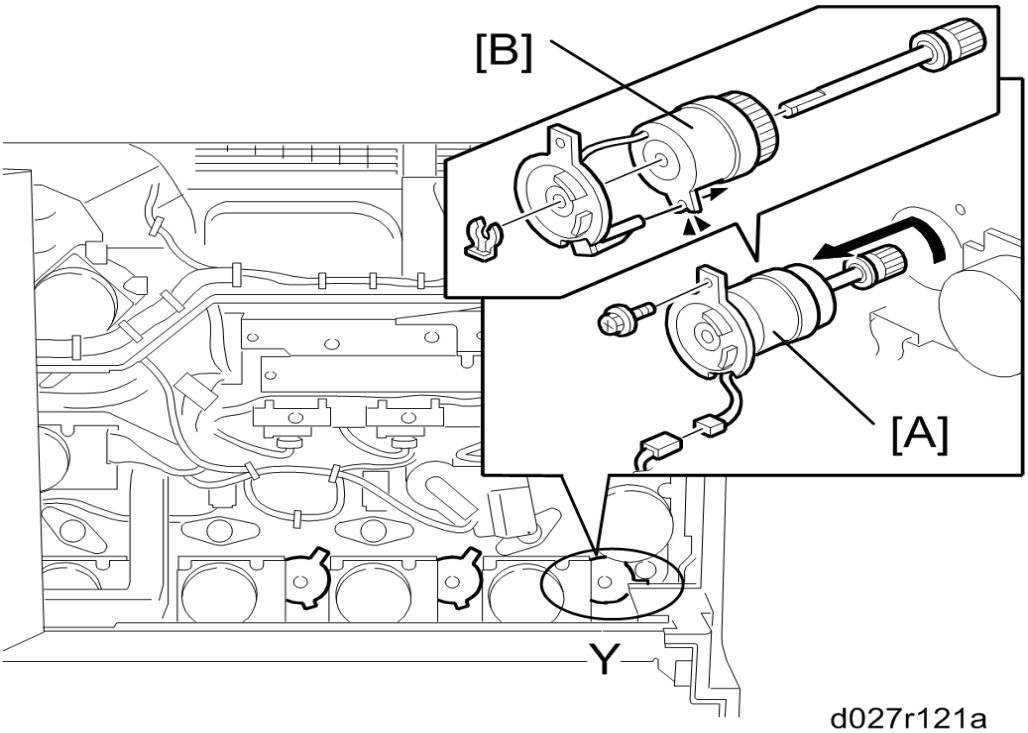

7. Turn the development clutch unit [A] counter-clockwise and then pull it out (x 1).
8. Development clutch-Y [B] (x 1)

WWW.SERVICE-MANUAL.NET

4.10.17 DEVELOPMENT CLUTCHES FOR M AND C

1. Rear cover (☛ p.4-15)
2. PSU bracket (☛ p.4-135 "PSU")
3. Open the controller box (☛ p.4-131 "Controller Box").
4. Drum/development motors for M and C (☛ p.4-73)
5. Disconnect the connector for each development clutch (x 1).

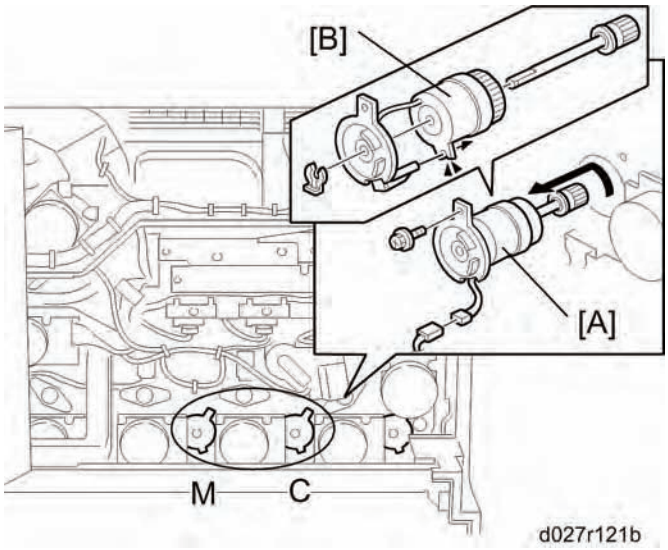

6. Turn the development clutch unit [A] counter-clockwise and then pull it out (x 1).
7. Development clutches for M and C [B] (x 1)

WWW.SERVICE-MANUAL.NET

4.10.18 DEVELOPMENT CLUTCH-K

1. Rear cover (☛p.4-15)
2. PSU bracket (☛p.4-135 "PSU")
3. Controller box (☛p.4-131 "Controller Box")
4. Drum/development motor-K (☛ p.4-74)

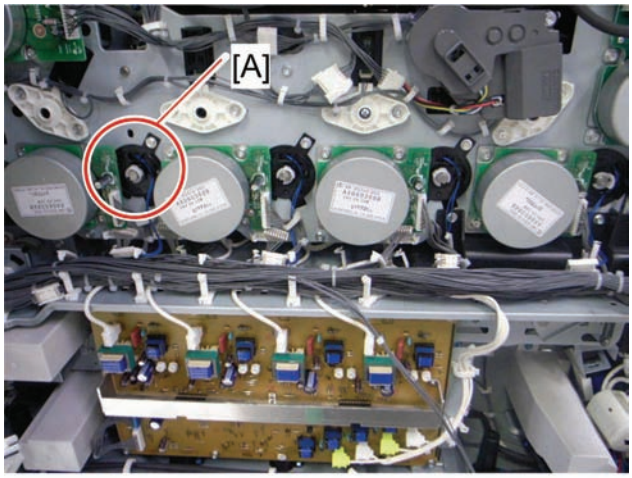

d027r586

5. Turn the development clutch unit [A] counter-clockwise and then pull it out (x 1).

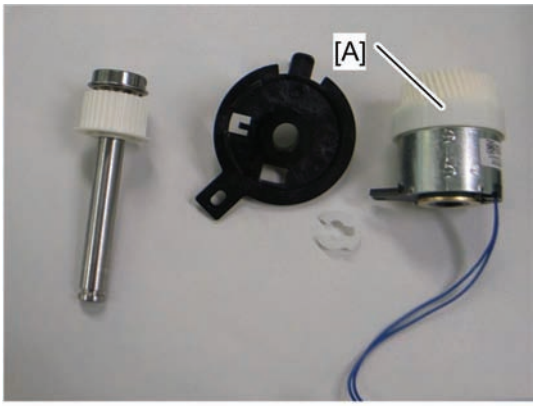

d027r167

6. Development clutch-K [A] (x 1)

WWW.SERVICE-MANUAL.NET

4.11 FUSING

4.11.1 FUSING UNIT PM PARTS

In the fusing unit, there are some PM parts. Refer to the following list to check the PM parts.

PM Parts	Replacement Procedure
Heating Roller	☛ p.4-89
-Bearing	☛ p.4-89
Pressure Roller	☛ p.4-97
-Bearing	☛ p.4-97

4.11.2 FUSING UNIT

⚠CAUTION

- Turn off the main switch and wait until the fusing unit cools down before beginning any of the procedures in this section. The fusing unit can cause serious burns.

Important

- After the PM counter for the heating roller has reached its PM life (300K pages), the machine stops the operation automatically. Replace the heating roller before the machine stops its operation (stop warning: 315K pages, stop: 330K pages).
- Change the setting of SP3-902-018 from "0" to "1" before replacing the heating roller. Otherwise, the machine will not recover.

1. If you will replace the heating roller or pressure roller in the fusing unit (at PM for example), then reset each counter.
   - Set SP 3902-018 to "1" for the heating roller replacement.
   - Set SP 3902-019 to "1" for the pressure roller replacement.

   Note

   - If you do this, then the machine will reset the PM counter for the heating roller or pressure roller automatically, after you turn the power on again.
   - It is not necessary to clear the PM counter for the fusing unit with SP mode when you replace the fusing unit. This is because the fusing unit has a new unit detection mechanism.
2. Turn off the main power switch.
3. Open the right door.

WWW.SERVICE-MANUAL.NET

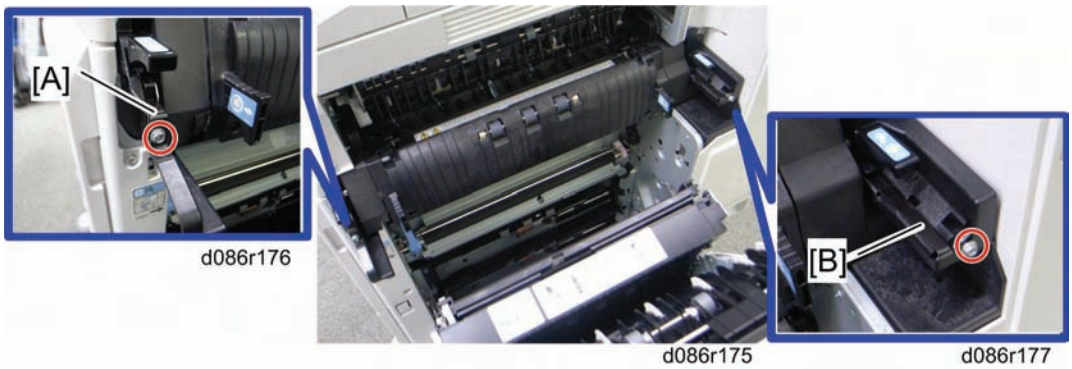

4. Front fusing stopper [A] (x 1)
5. Rear fusing stopper [B] (x 1)

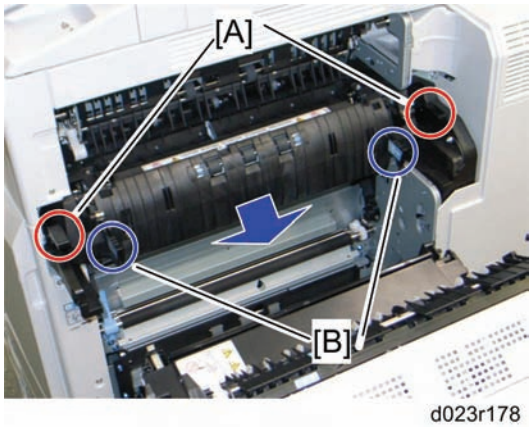

6. Release the lock levers [A].
7. Hold the fusing unit handles [B], and then pull out the fusing unit.

4.11.3 FUSING ENTRANCE GUIDE PLATE

1. Fusing unit (p.4-87)

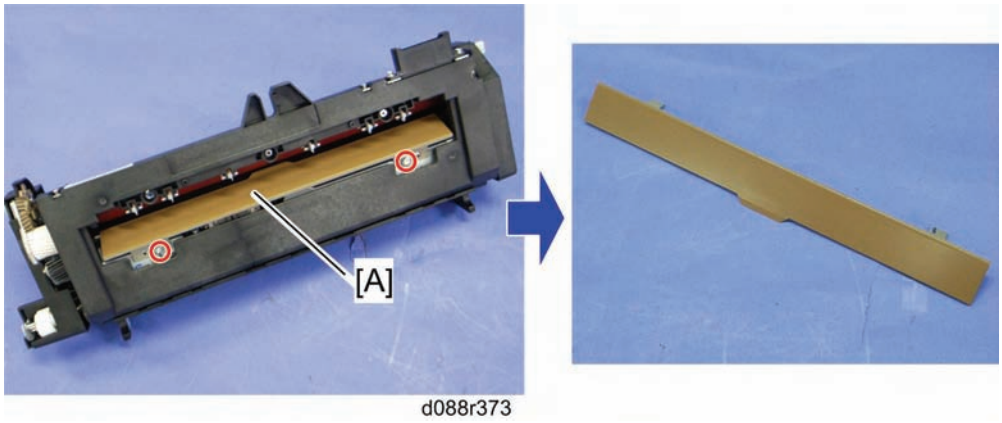

2. Fusing entrance guide plate [A] (x 2)

WWW.SERVICE-MANUAL.NET

Cleaning Requirement

The fusing entrance guide plate requires cleaning maintenance every fusing unit maintenance interval. Clean the fusing entrance guide plate at the place shown above with a dry cloth, and then clean the fusing entrance guide plate again with a cloth moistened with alcohol.

4.11.4 FUSING EXIT GUIDE PLATE CLEANING PROCEDURE

The fusing exit guide plate requires cleaning maintenance every fusing unit maintenance interval.

1. Fusing unit (☛ p.4-87)

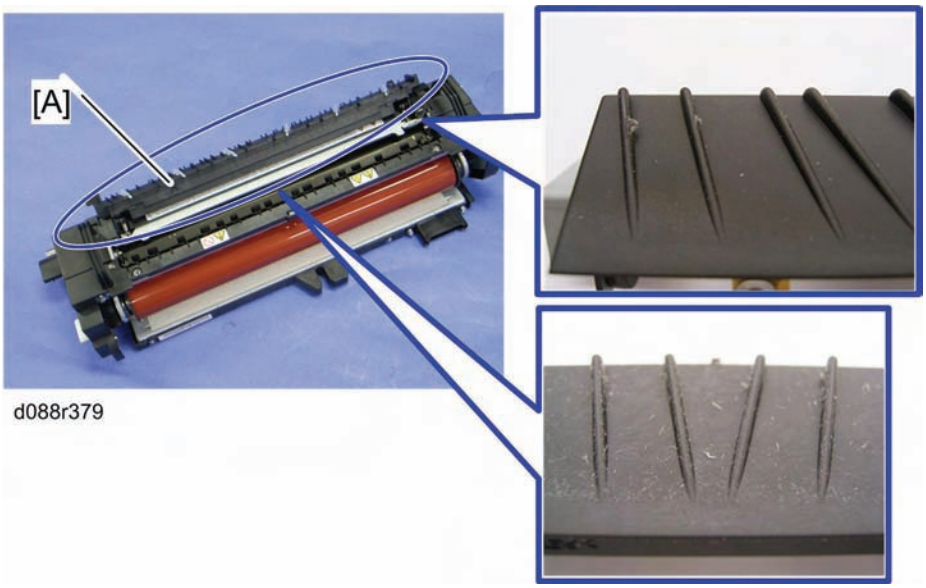

2. Open the exit guide plate [A].
3. Clean the exit guide plate with a dry cloth, and then clean the exit guide plate again with a cloth moistened with alcohol at the points shown above.

WWW.SERVICE-MANUAL.NET

4.11.5 HEATING ROLLER AND HEATING ROLLER BEARING

Important

- After the PM counter for the heating roller has reached its PM life (300K pages), the machine stops the operation automatically. Replace the heating roller before the machine stops its operation (stop warning: 315K pages, stop: 330K pages).
- Change the setting of SP3-902-018 from "0" to "1" before replacing the heating roller. Otherwise, the machine will not recover.

1. Fusing unit (☛ p.4-87)

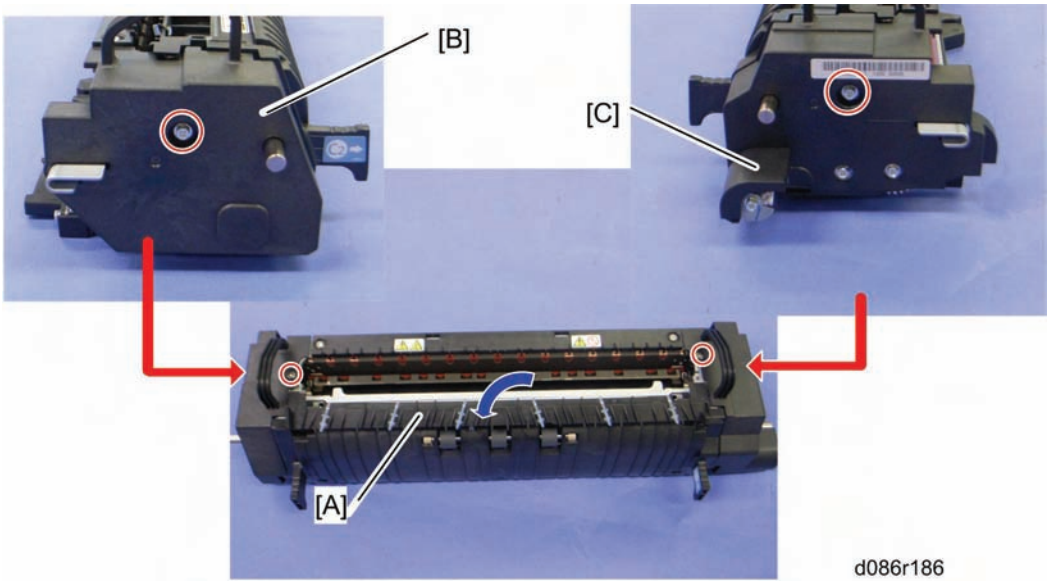

2. Open the jam removal door [A].
3. Front fusing cover [B] (x 2; Stepped screws)
4. Rear fusing cover [C] (x 2; Stepped screws)

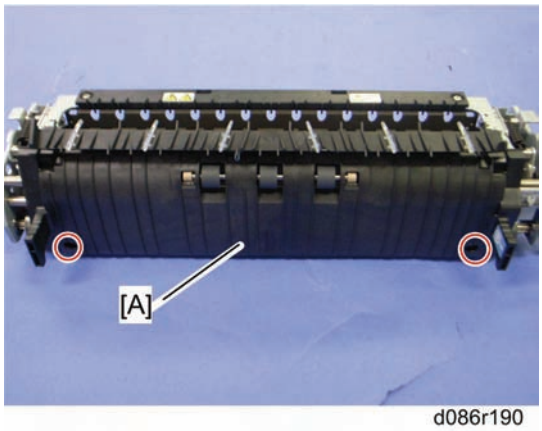

5. Fusing right cover [A] (x 2; Stepped screws)

WWW.SERVICE-MANUAL.NET

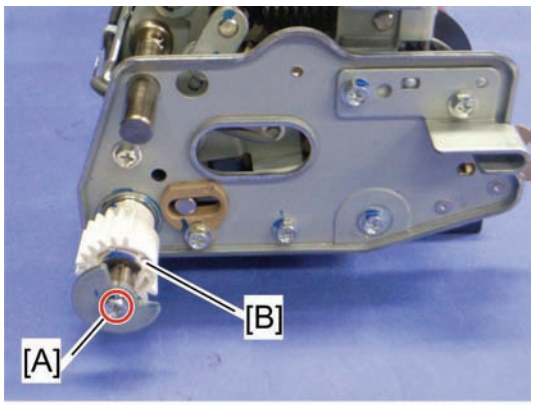

d088r187

6. Pressure roller contact shaft actuator [A] and pressure roller contact shaft gear [B] (x 1, x 1)

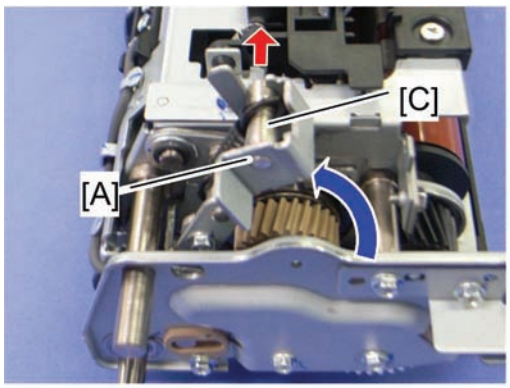

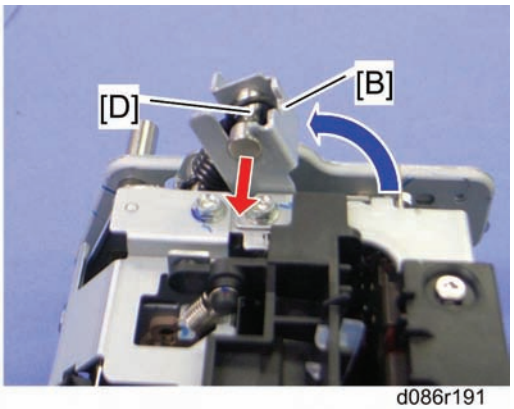

d086r191

7. Turn both pressure levers [A] [B], and pull out pins [C] [D].

CAUTION

- If the pins [C] [D] are not pulled out in this step, the fusing unit frames may become bent.

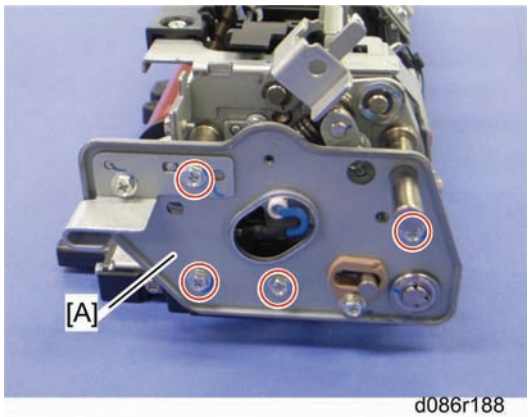

d086r188

8. Front bracket [A] (x 4, bearing x 1)

WWW.SERVICE-MANUAL.NET

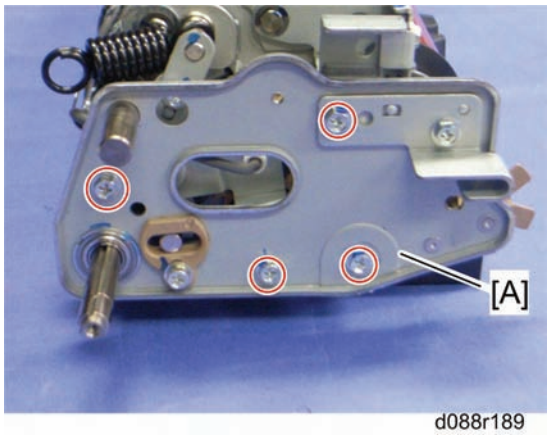

9. Rear bracket [A] (x 4, bearing x 1)

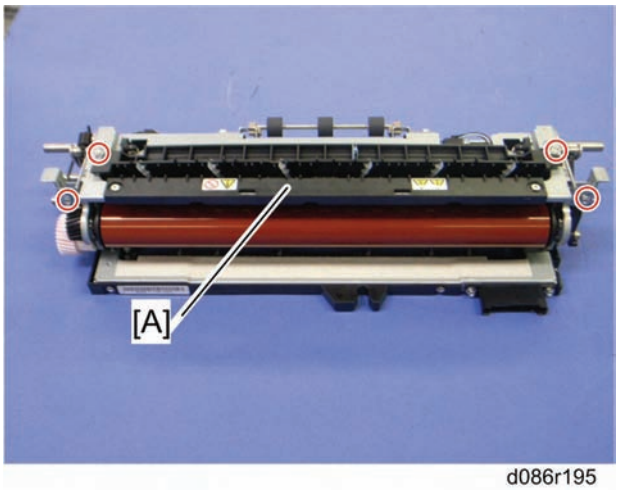

10. Top stay [A] (x 4)

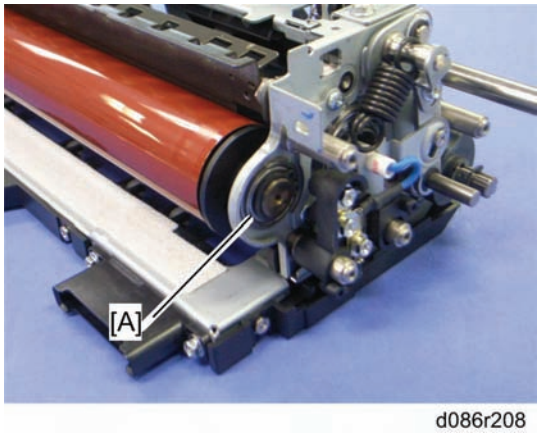

11. Heating roller bearing [A] at the front side (C-ring x 1)

WWW.SERVICE-MANUAL.NET

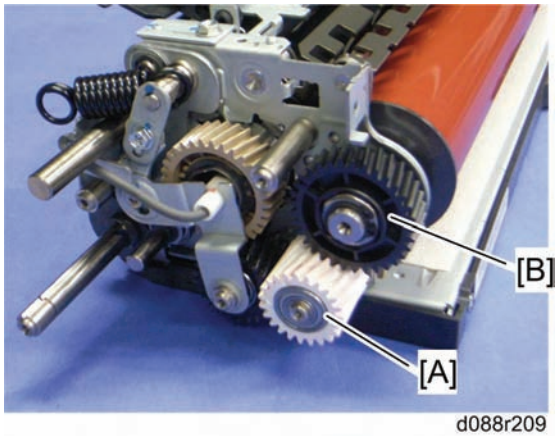

d088r209

12. Fusing drive gear [A]
13. Heating roller gear [B] (C-ring x 1)

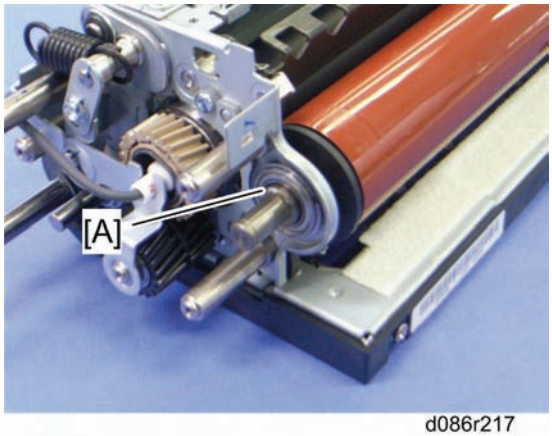

d086r217

14. Heating roller bearing [A] at the rear side

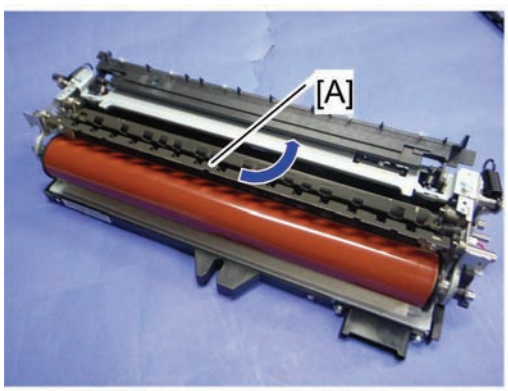

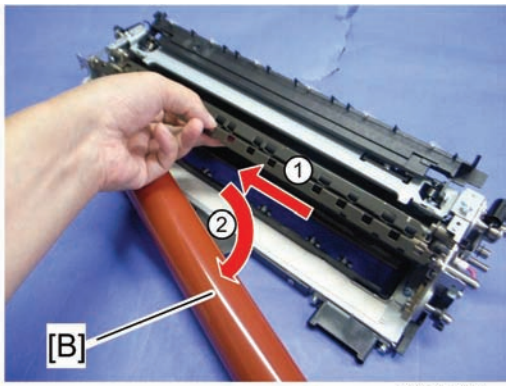

d088r737

15. Keep the heating roller stripper plate [A] open, and then remove the heating roller [B].

WWW.SERVICE-MANUAL.NET

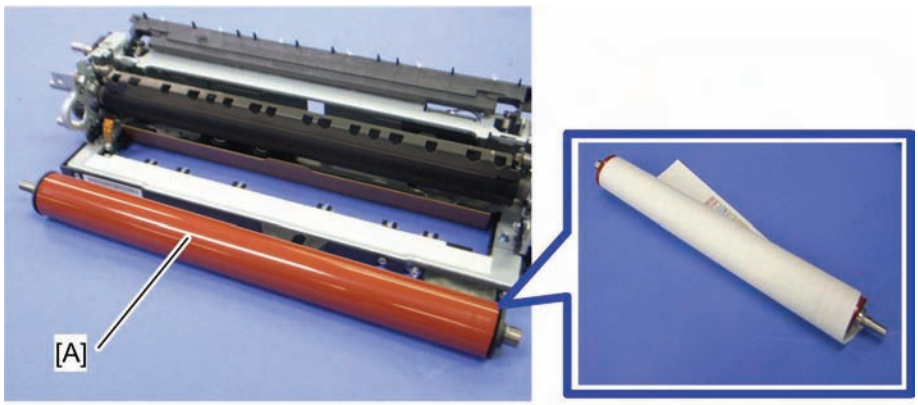

d086r210

16. Heating roller [A]

Note

- The surface of the heating roller is fragile, so the heating roller must be covered with a sheet of paper when it is placed on a table or floor.

When re-installing the heating roller

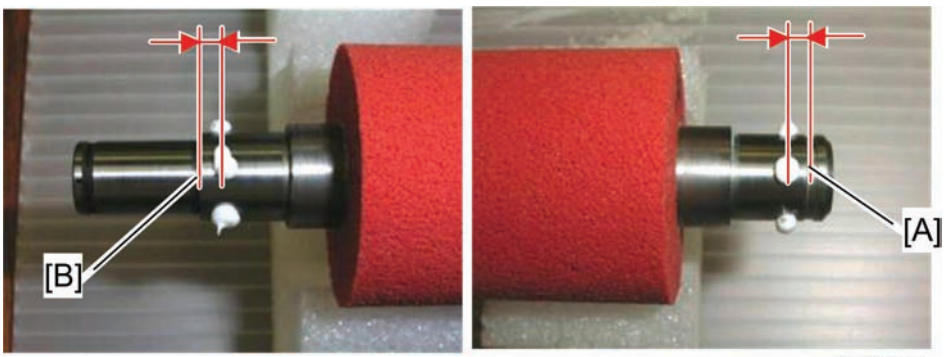

b222r682

1. Apply three spots of "Barrierta S552R" (the diameter of each spot must be about 3 mm in diameter, and approximately 0.1 g in weight) to the front shaft of the heating roller at 2 - 3 mm from the notch [A].
1. Apply three spots of "Barrierta S552R" (the diameter of each spot must be about 3 mm in diameter, and approximately 0.1 g in weight) to the rear shaft of the heating roller at 2 - 3 mm from the edge [B] (rear side of the heating roller).

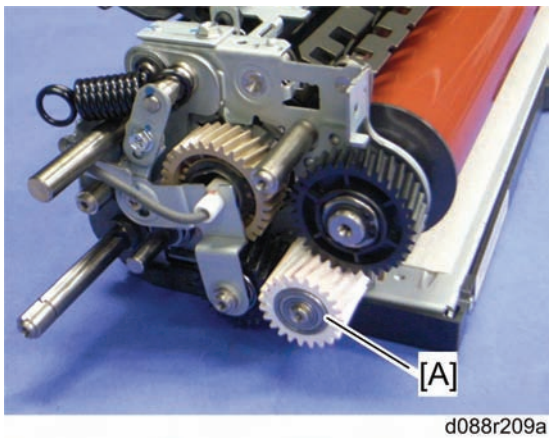

d088r209a

WWW.SERVICE-MANUAL.NET

Note

- Do not wipe off the grease of the new fusing drive gear when replacing the fusing drive gear [A].

Heating Roller Stripper Plate Installation

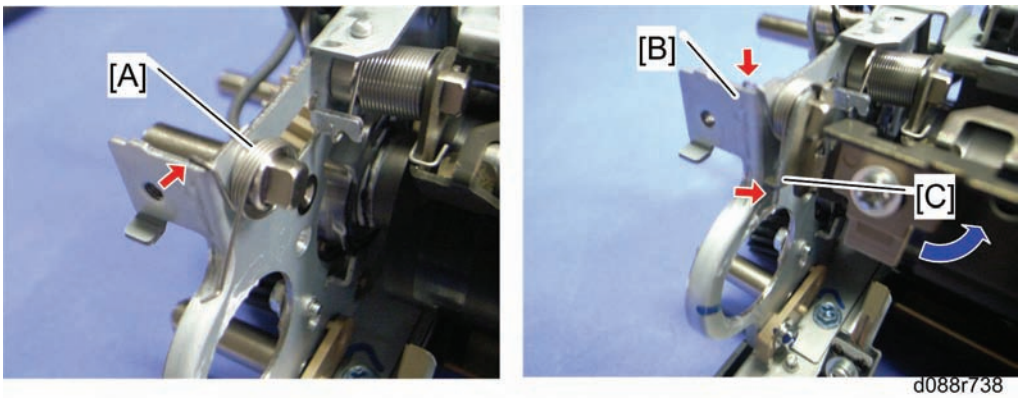

The heating roller stripper plate may come off the fusing unit frame after removing the heating roller. When reinstalling the heating roller stripper plate, set the springs [A] (front and rear) correctly as shown above. Make sure that the springs hook the fusing unit frame [B] and heating roller stripper plate [C].

WWW.SERVICE-MANUAL.NET

4.11.6 FUSING CLEANING FELT

1. Fusing unit (☛ p.4-87)
2. Heating roller (☛ p.4-89)

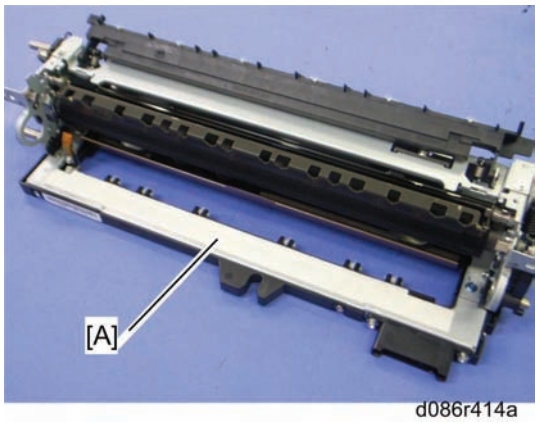

3. Remove the fusing cleaning felt [A].

When attaching a new fusing cleaning felt

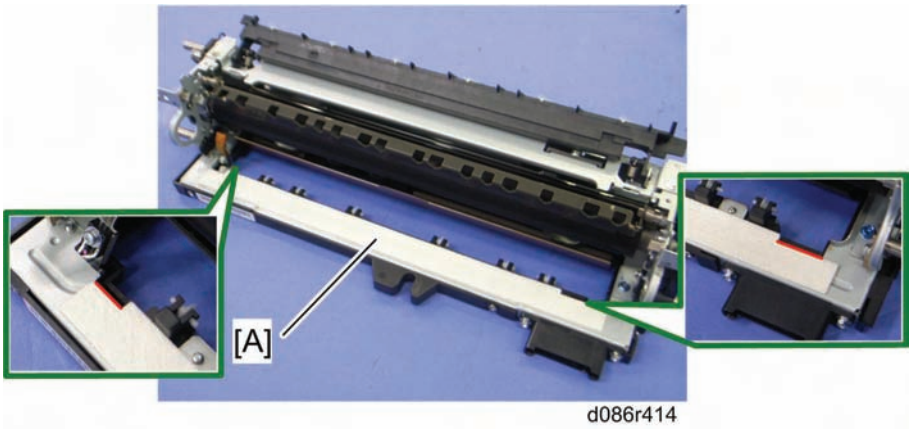

Attach the fusing cleaning felt [A], aligning both edges of the fusing cleaning felt with the red lines on the bottom cover.

Note

- Make sure that the fusing cleaning felt is correctly attached to the frame. Otherwise, dust from the IH coil unit may fall on the paper in the fusing unit and the output becomes dirty.

WWW.SERVICE-MANUAL.NET

4.11.7 FUSING LAMP

1. Fusing unit (☛ p.4-87)
2. Front bracket (☛ p.4-89 "Heating Roller and Heating Roller Bearing")
3. Rear bracket (☛ p.4-89 "Heating Roller and Heating Roller Bearing")

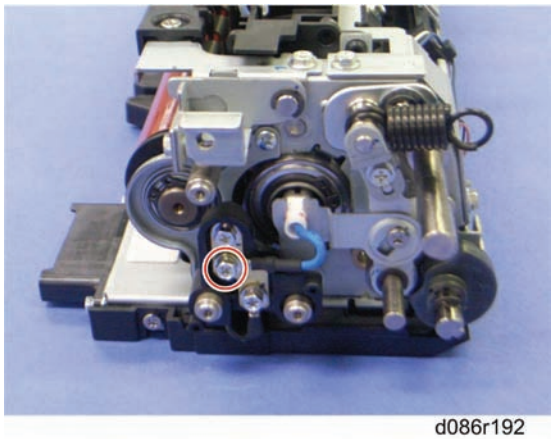

d086r192

4. Front terminal of the fusing lamp (x 1)

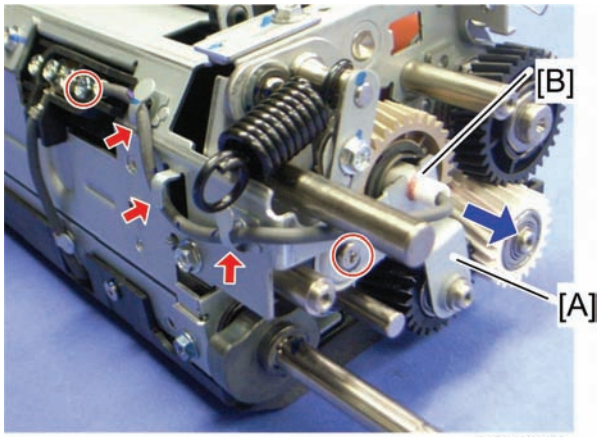

d088r193

5. Fusing lamp rear bracket [A] (x 1)
6. Fusing lamp [B] (x 1, x 2)

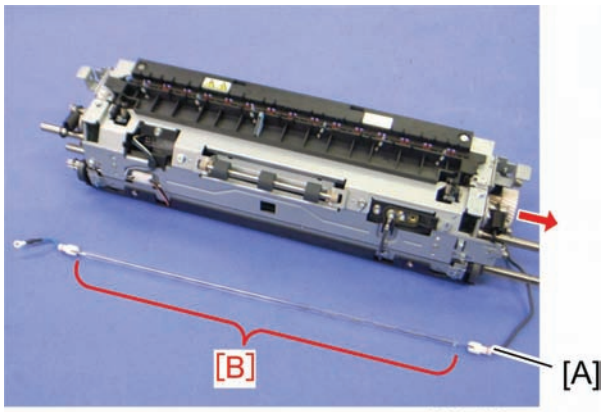

d086r193a

7. Fusing lamp [A]

WWW.SERVICE-MANUAL.NET

CAUTION

- Remove the fusing lamp without touching the glass part [B].
- Pay attention to the direction of the fusing lamp during the re-installation.

4.11.8 PRESSURE ROLLER AND PRESSURE ROLLER BEARING

1. Heating roller(☛ p.4-89)
2. Fusing lamp (☛ p.4-96)

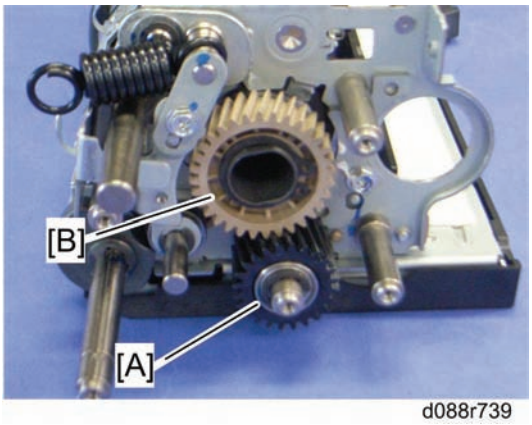

3. One-way clutch gear [A] (℃ x 1)
4. Pressure roller gear [B] at the rear side (C-ring x 1)

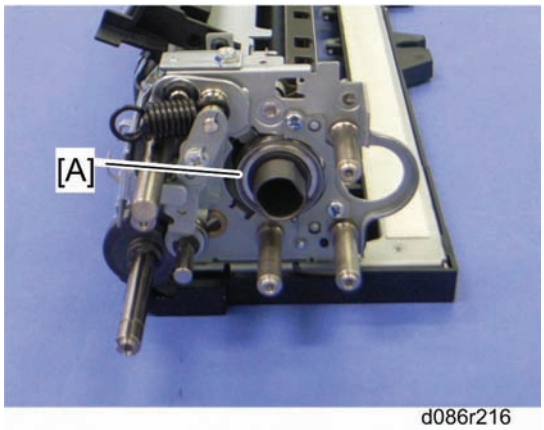

5. Pressure roller bearing [A] at the rear side

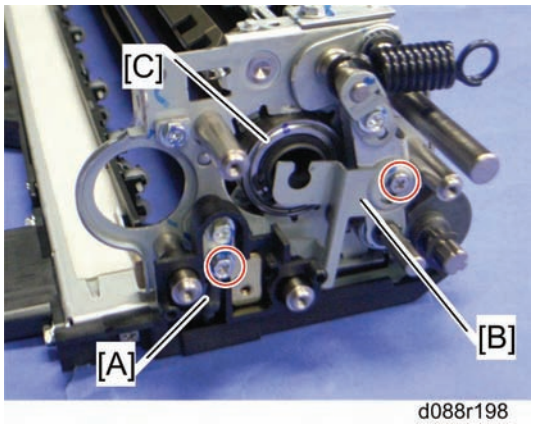

WWW.SERVICE-MANUAL.NET

6. Front terminal [A] (x 1)
7. Lamp holder front bracket [B] (x 1)
8. Pressure roller bearing [C] at the front side (C-ring x 1)

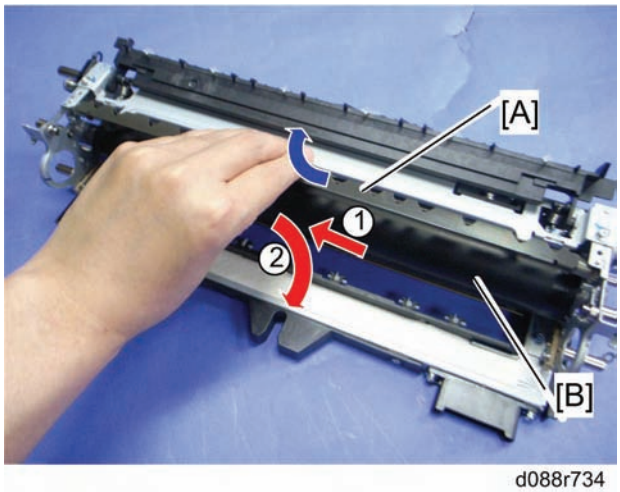

9. Keep the pressure roller stripper plate [A] open.
10. Pressure roller [B]

When re-installing the pressure roller

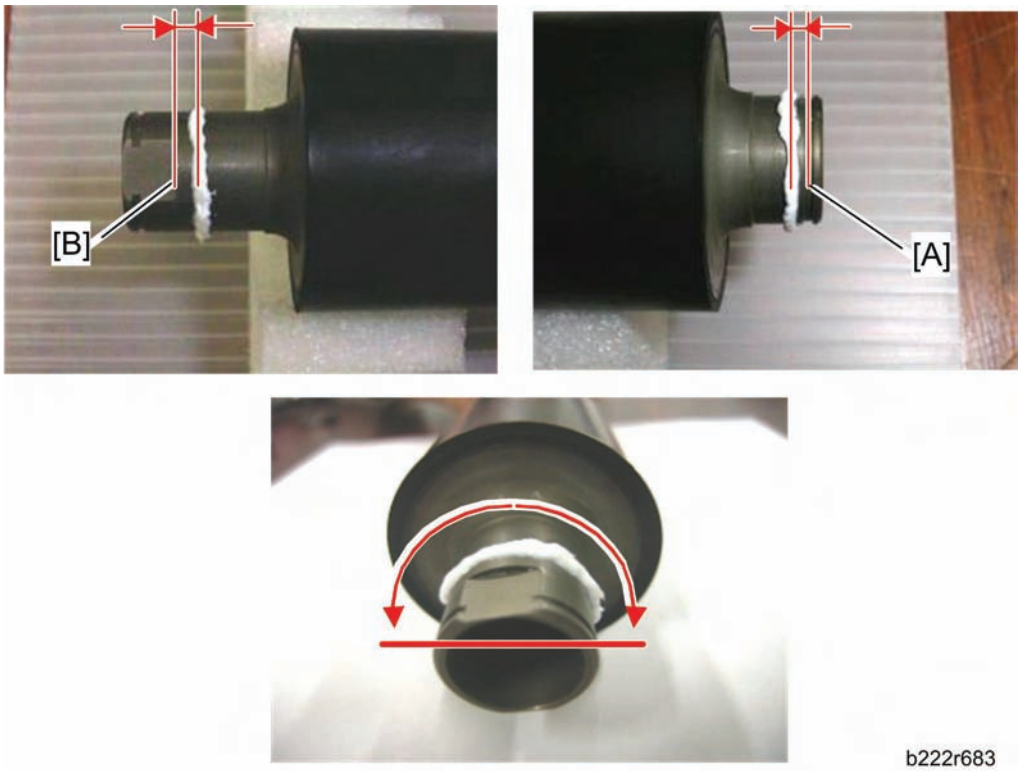

1. Apply "Barrierta S552R" to the front shaft of the pressure roller at 2 mm from the notch [A], and to the rear shaft of the pressure roller at 2 mm from the edge [B]. (Apply the lubricant to half of the circumference of the pressure roller, as shown in the lower of the

WWW.SERVICE-MANUAL.NET

three above diagrams.)

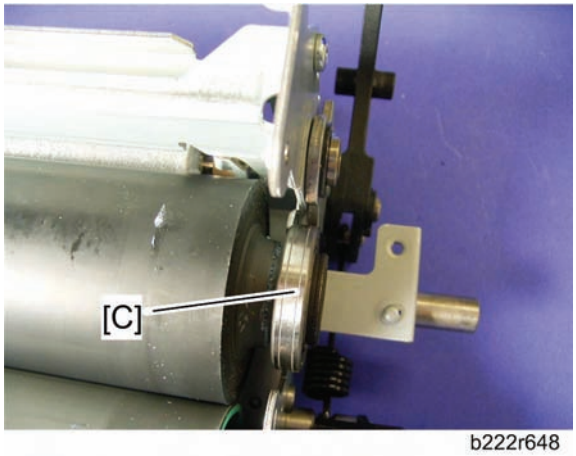

2. Make sure that pressure roller bearing [C] at the front side is set as shown above.

Pressure Roller Stripper Plate Installation

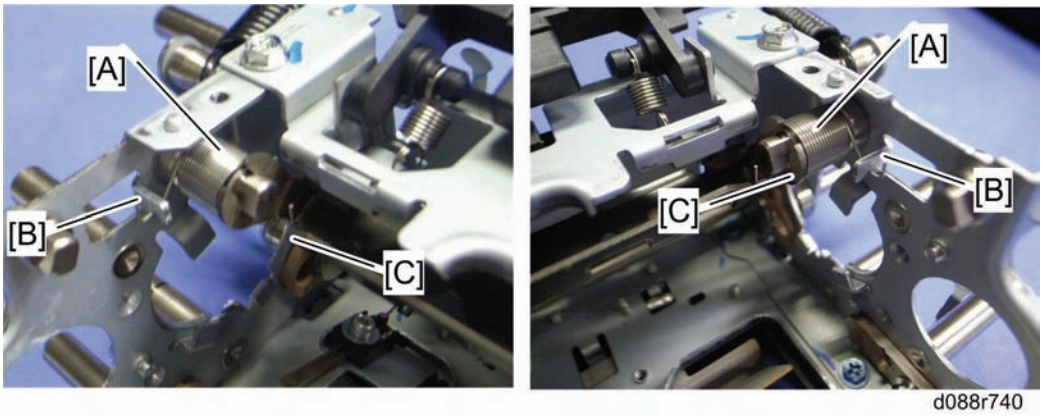

When reinstalling the pressure roller stripper plate, set the springs [A] (front and rear) correctly as shown above. Make sure that the springs hook the fusing unit frame [B] and pressure roller stripper plate [C].

WWW.SERVICE-MANUAL.NET

4.11.9 STRIPPER PLATES

1. Fusing unit (☛ p.4-87)
2. Heating roller (☛ p.4-89)

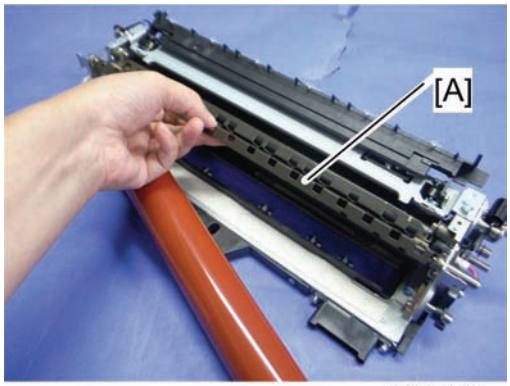

d088r737a

3. Heating roller stripper plate [A] (spring x 2)
4. Pressure roller (☛ p.4-97)

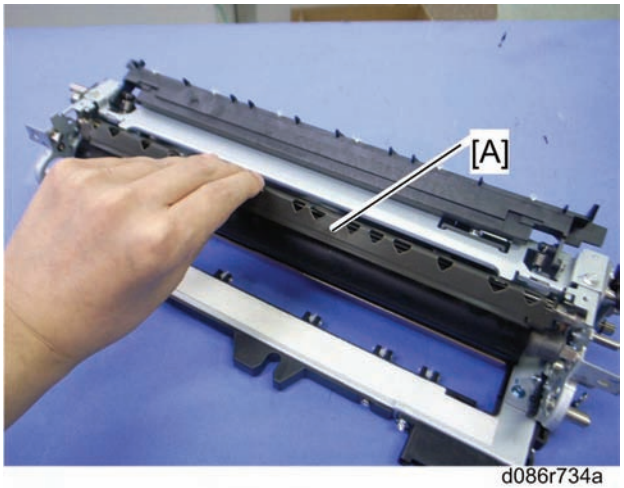

d086r734a

5. Pressure roller stripper plate [A] (spring x 2)

Cleaning Requirement

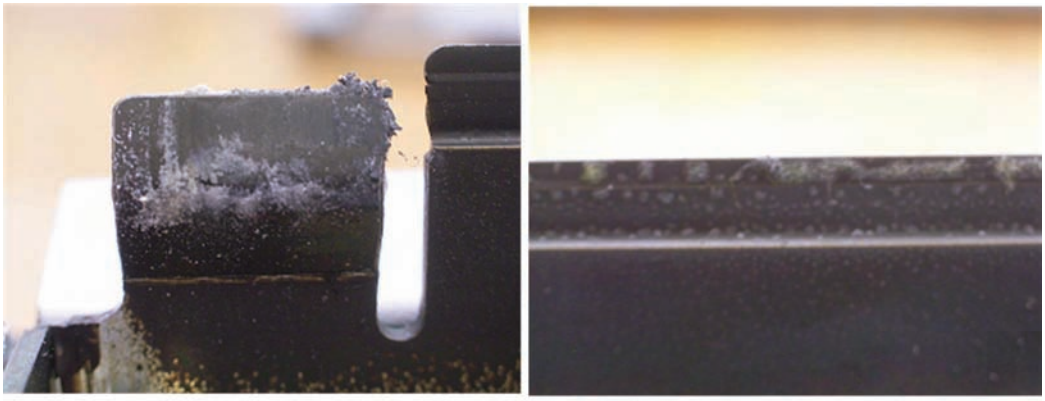
d037r377

WWW.SERVICE-MANUAL.NET

The stripper plates require cleaning maintenance every fusing unit maintenance interval. Clean the stripper plates with a dry cloth, and then clean the stripper plates again with a cloth moistened with alcohol at the points shown above.

4.11.10 HEATING ROLLER THERMISTOR

1. Fusing unit (☛ p.4-87)
2. Fusing right cover (☛ p.4-96)

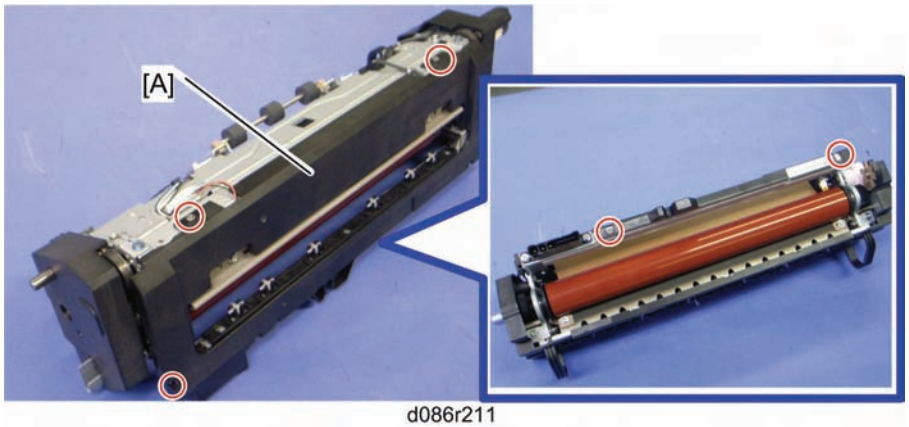

d086r211

3. Fusing bottom cover [A] (x 5)

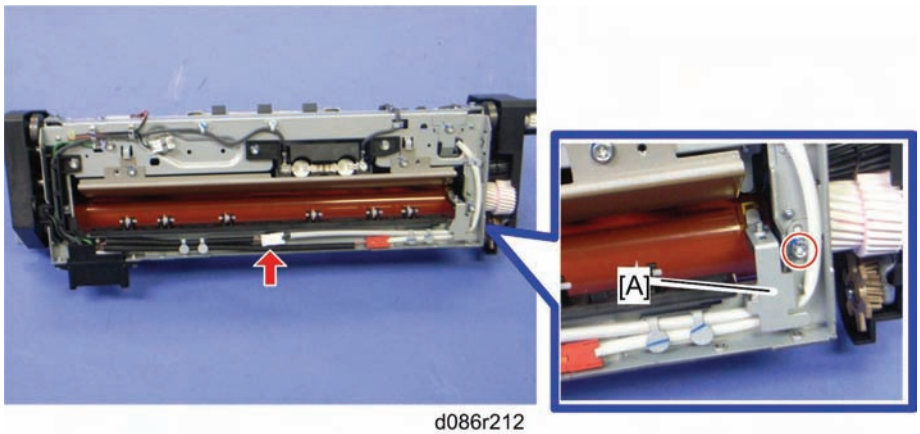

d086r212

4. Heating roller thermistor with bracket [A] (x 1, x 1)

WWW.SERVICE-MANUAL.NET

4.11.11 PRESSURE ROLLER THERMOSTAT

1. Fusing unit (☛ p.4-87)
2. Fusing right cover (☛ p.4-89 "Heating Roller and Heating Roller Bearing")
3. Fusing bottom cover (☛ p.4-101 "Heating Roller Thermistor")

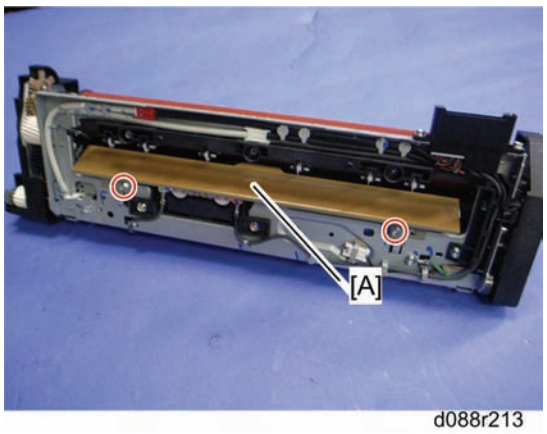

4. Entrance guide plate [A] (x 2)

Note

- The entrance guide plate must be removed with the orientation of the fusing unit as shown above, to protect the surface of the heating roller from damage.

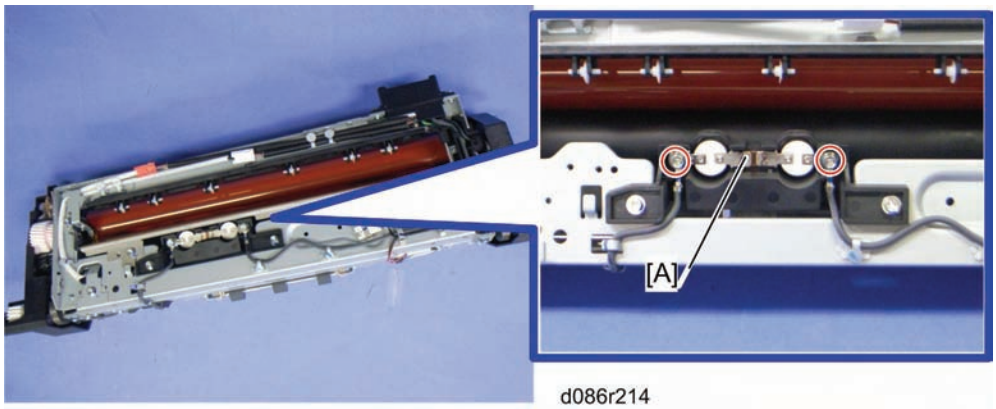

5. Pressure roller thermostats [A] (x 4)

WWW.SERVICE-MANUAL.NET

4.11.12 PRESSURE ROLLER THERMISTORS

Pressure Roller Thermistor: Center

1. Fusing unit (☛ p.4-87)
2. Fusing bottom cover (☛ p.4-101 "Heating Roller Thermistor")

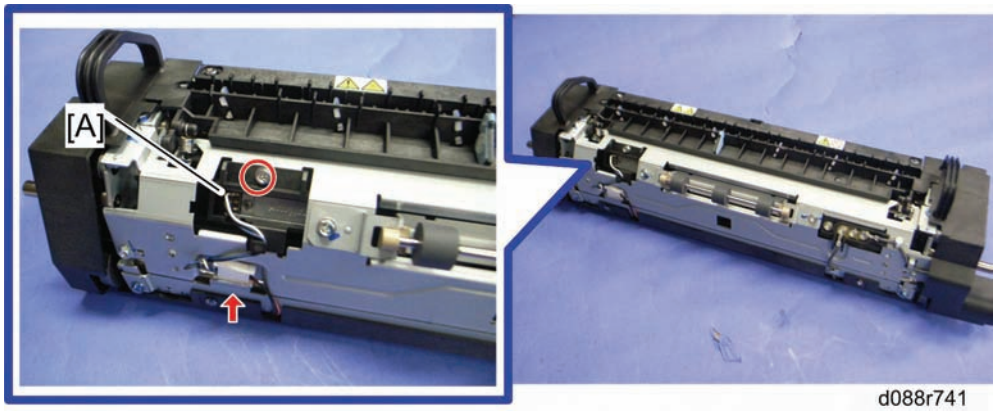

3. Thermistor base [A] (☞ x 1)

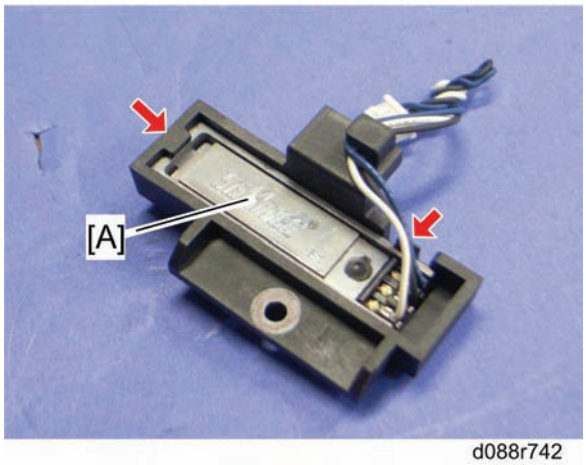

4. Pressure roller thermistor: center [A] (hooks)

Pressure Roller Thermistor: End

1. Fusing unit (☛ p.4-87)
2. Fusing right cover (☛ p.4-89 "Heating Roller and Heating Roller Bearing")
3. Fusing bottom cover (☛ p.4-101 "Heating Roller Thermistor")

WWW.SERVICE-MANUAL.NET

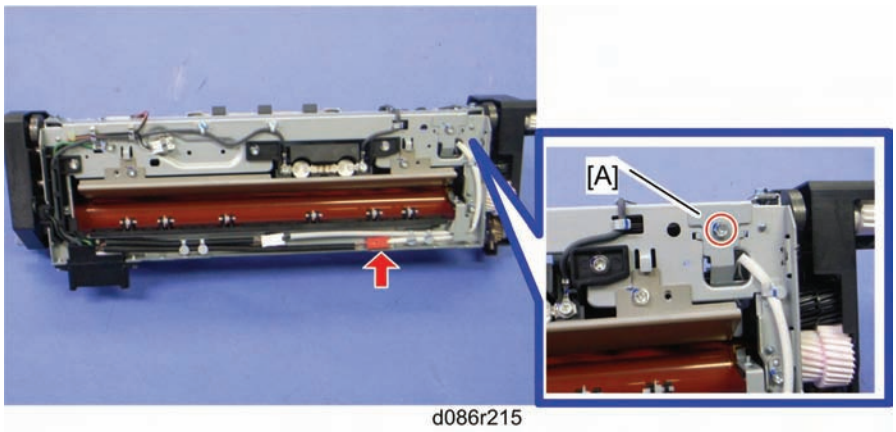

4. Pressure roller thermistor: end bracket [A] (x 1, x 1)

4.11.13 FUSING FAN

1. Rear cover (p.4-15)
2. Right rear cover (p.4-16)

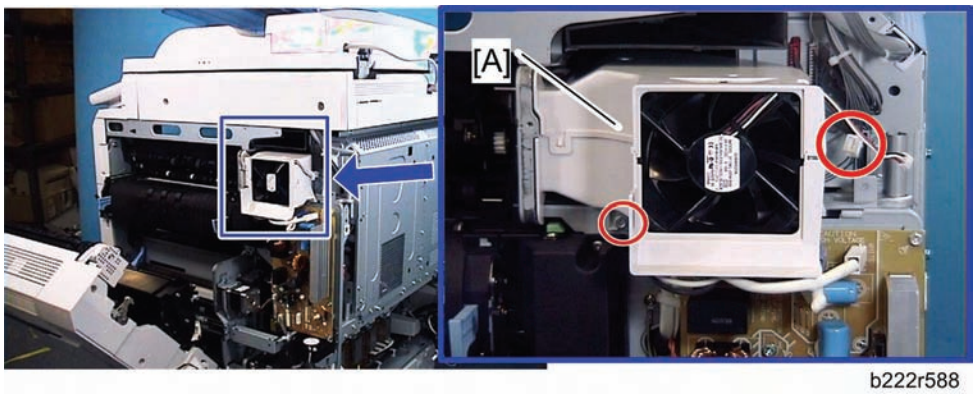

3. Fusing duct [A] (x 1, x 1)

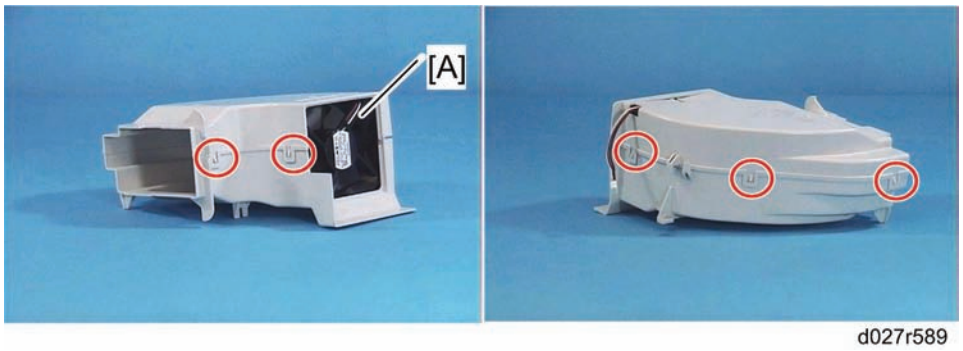

4. Fusing fan [A] (hook x 5)

When installing the fusing fan

Make sure that the fusing fan is installed with its decal facing the right side of the machine.

WWW.SERVICE-MANUAL.NET

4.11.14 PAPER EXIT FAN

1. Open the right door.
2. Front right cover (☛ p.4-16 "Operation Panel")

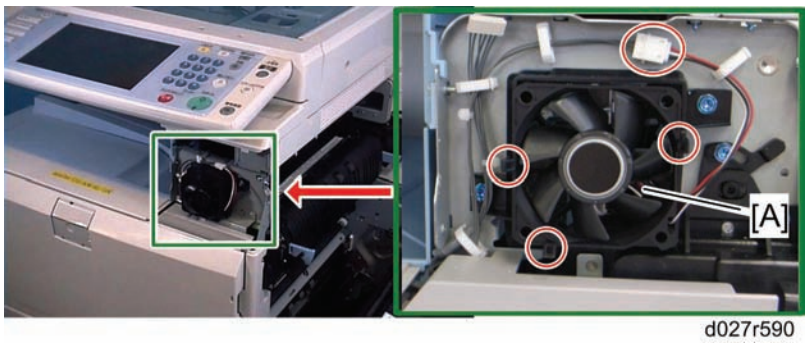

3. Paper exit fan [A] (☶ x 1, hook x 3)

When installing the paper exit fan

Note

- Make sure that the paper exit fan is installed with its decal facing the rear of the machine.

WWW.SERVICE-MANUAL.NET

4.11.15 IH (INDUCTION HEATING) INVERTER FAN

1. Rear cover (☛ p.4-15)
2. Right rear cover (☛ p.4-16)

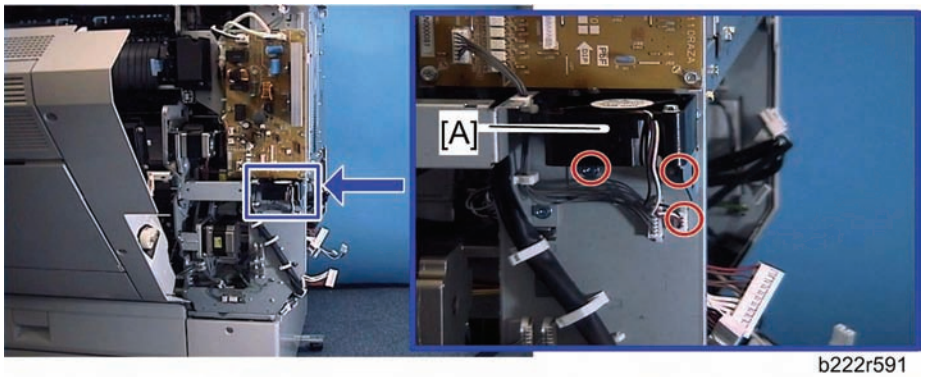

3. IH inverter fan bracket [A] (x 2, x 1)

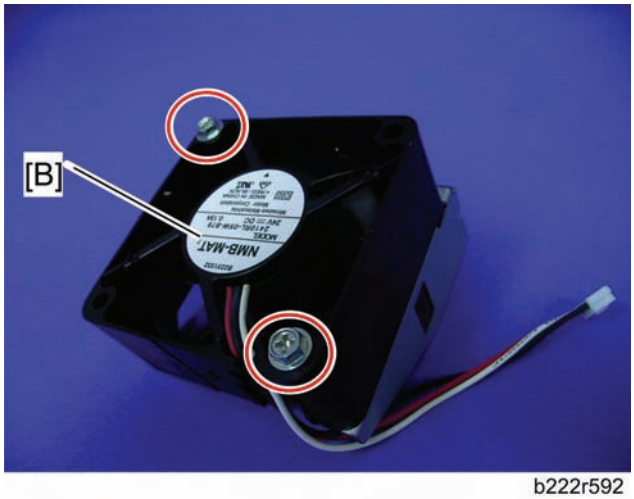

4. IH inverter fan [B] (x 2)

When installing the IH inverter fan

Make sure that the IH inverter fan is installed with its decal facing the upper side of the machine.

WWW.SERVICE-MANUAL.NET

4.11.16 THERMOPILE

1. Open the right door.
2. Front right cover (☛ p.4-16 "Operation Panel")
3. Pull out trays 1 and 2, and the image transfer belt unit.

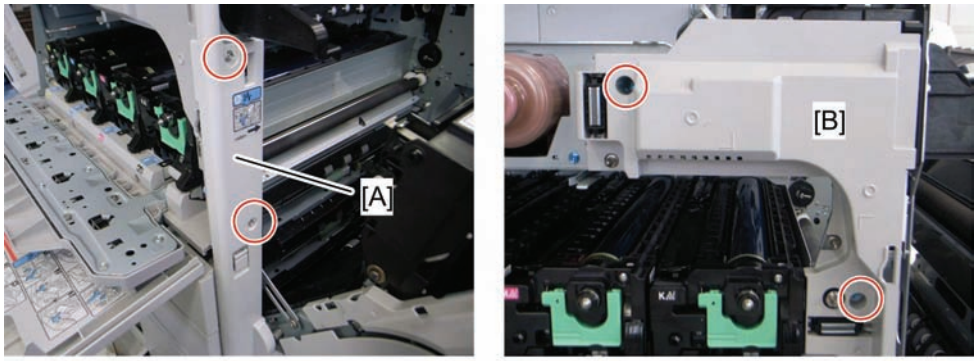

d027r219

4. Right front cover [A] and front inner cover [B]

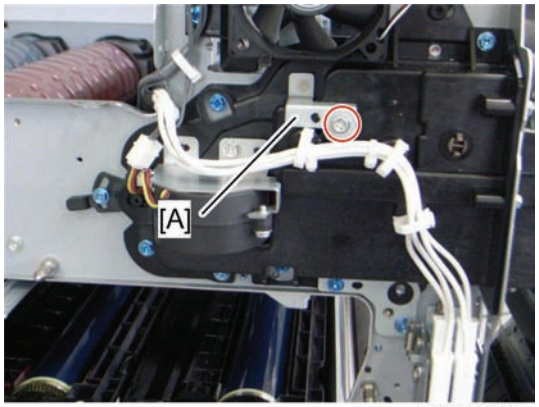

d027r220a

5. Bracket [A] (x 1)

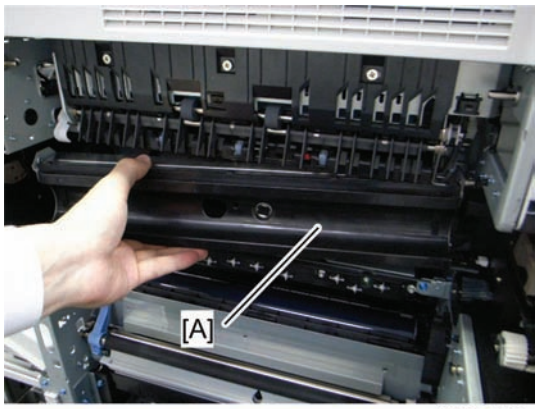

d027r223

6. IH coil unit [A]
   - First, release the front side of the IH coil unit.

WWW.SERVICE-MANUAL.NET

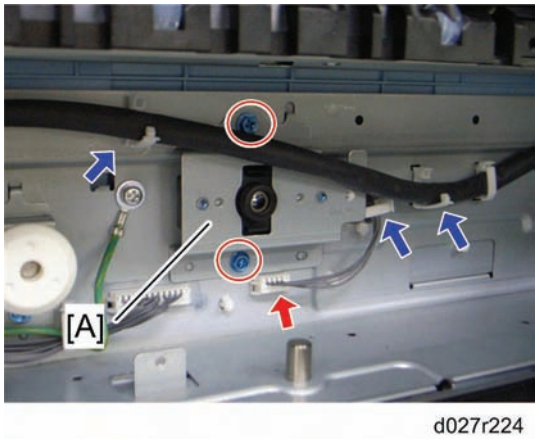

7. Thermopile bracket [A] (x 2, x 1, x 3)
8. Thermopile (x 2)

When cleaning the lens of the thermopile

CAUTION

- Do this cleaning procedure after the fusing unit has completely cooled down. Otherwise, you may get a serious burn.
- Do not push the thermostats on the IH coil unit. If you do, the thermostats will be opened. In that case, the IH coil unit must be replaced.

1. Fusing unit (p.4-87)

WWW.SERVICE-MANUAL.NET

d027r415

2. Clean with a cotton-swab dipped in alcohol.

4.11.17 PRESSURE ROLLER HP SENSOR

1. Open the right door.
2. Fusing unit (☛ p.4-87)

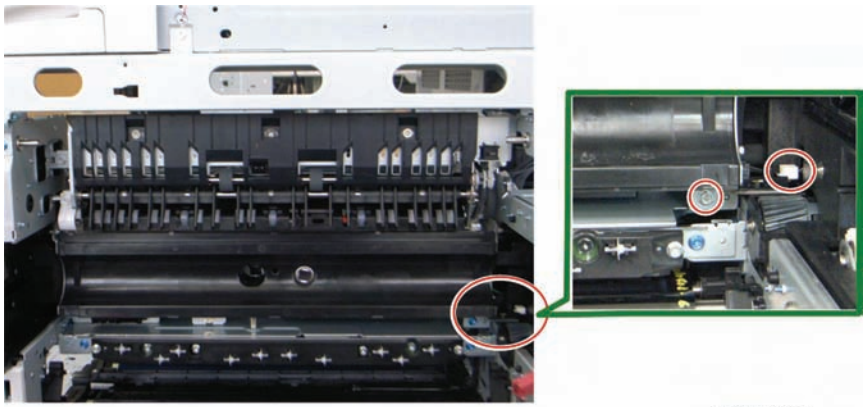

d027r413

3. Pressure roller HP sensor (x 1, x 1)

WWW.SERVICE-MANUAL.NET

4.11.18 IH COIL FAN

1. Open the right door.
2. Front right cover (☛ p.4-16 "Operation Panel")
3. Pull out trays 1 and 2, and the image transfer belt unit.
4. Right front cover and front inner cover (☛ p.4-105 "Thermopile")

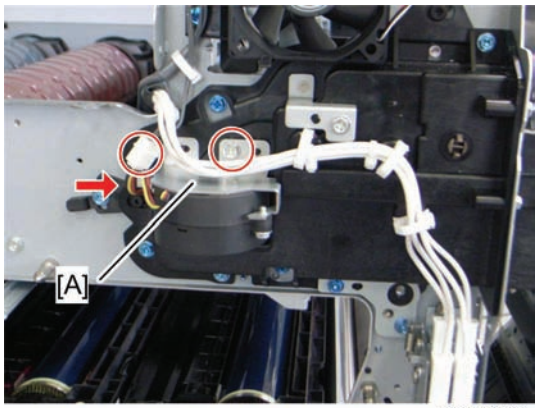

d027r220

5. IH coil fan bracket [A] (x 1, x 1, x 1)
6. IH coil fan (x 2)

4.11.19 IH COIL UNIT

CAUTION

- Do not push the thermostats on the IH coil unit. If you do, the thermostats will be opened. In that case, the IH coil unit must be replaced.

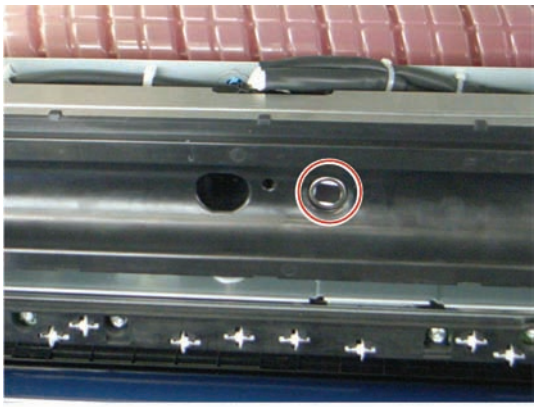
d027r617

1. Fusing unit (☛ p.4-87)
2. Rear cover (☛ p.4-15)
3. Right rear cover (☛ p.4-16)
4. Open the controller box (☛ p.4-131 "Controller Box").
5. Fusing duct (☛ p.4-104 "Fusing Fan")
6. IH inverter (☛ p.4-138)

WWW.SERVICE-MANUAL.NET

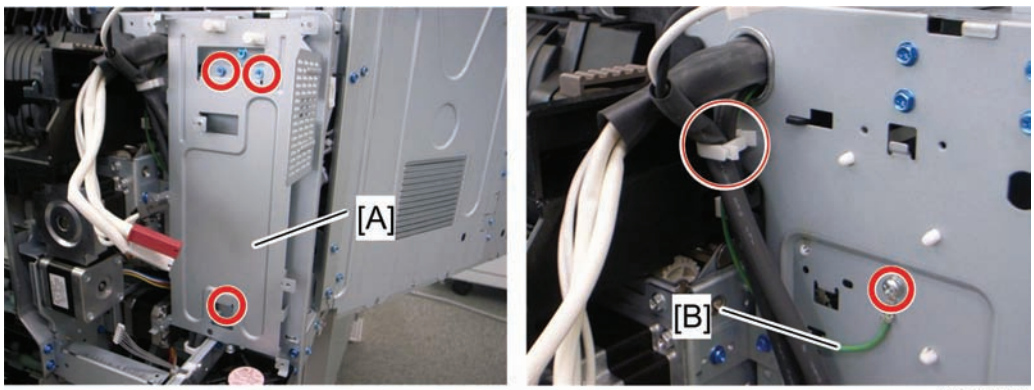

d027r618

7. IH inverter bracket [A] x 3)
8. Ground cable [B] (x 1, x 1)

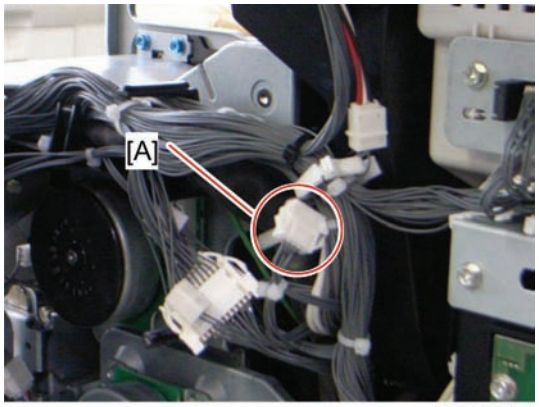

d027r221

9. Remove the connector [A].

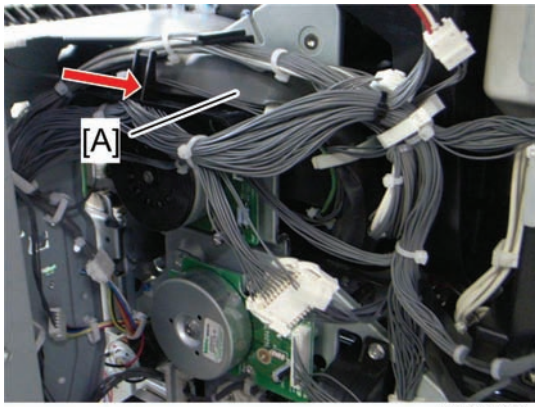

d027r222

10. Pull the Harness [A] in the arrow direction.

WWW.SERVICE-MANUAL.NET

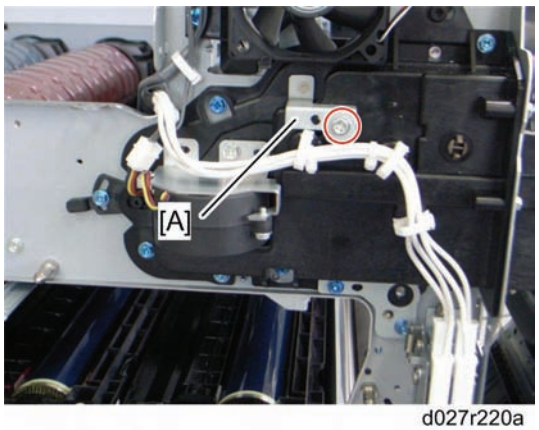

d027r220a

11. Bracket [A] (x 1)

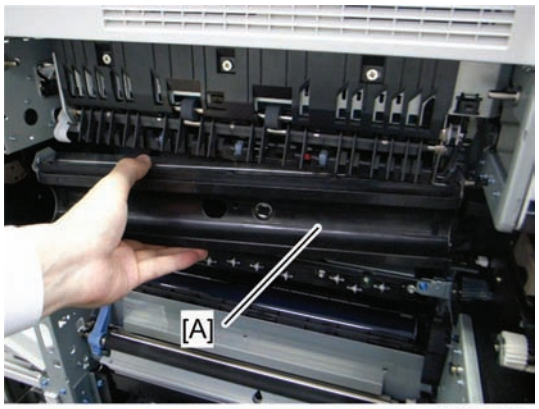

d027r223

12. IH coil unit [A] (First, release the front side of the IH coil unit.)

WWW.SERVICE-MANUAL.NET

4.12 PAPER FEED

4.12.1 PAPER FEED UNIT

1. Rear cover (☛ p.4-15)
2. Right rear cover (☛ p.4-16)
3. Duplex unit (☛ p.4-124)
4. Pull out tray 1 and tray 2.

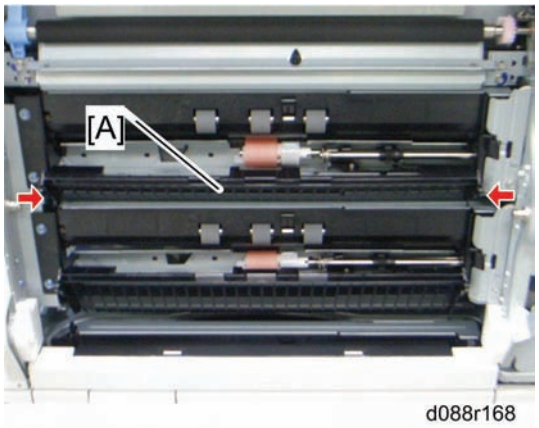

5. Paper guide plate [A] (tab x 2)

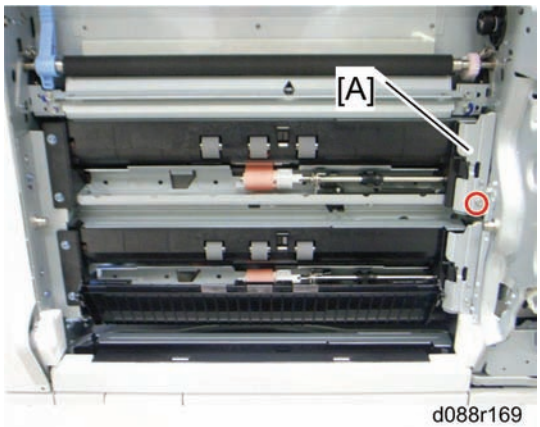

6. Harness cover [A] (x 1)

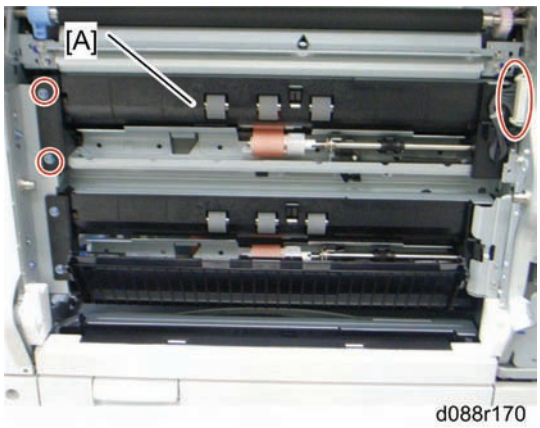

7. Paper feed unit [A] (x 2, x 1)

WWW.SERVICE-MANUAL.NET

4.12.2 SEPARATION ROLLER, FEED ROLLER AND PICK-UP BELT UNIT

Tray 1 and Tray 2

1. Paper feed unit (☛ p.4-112)

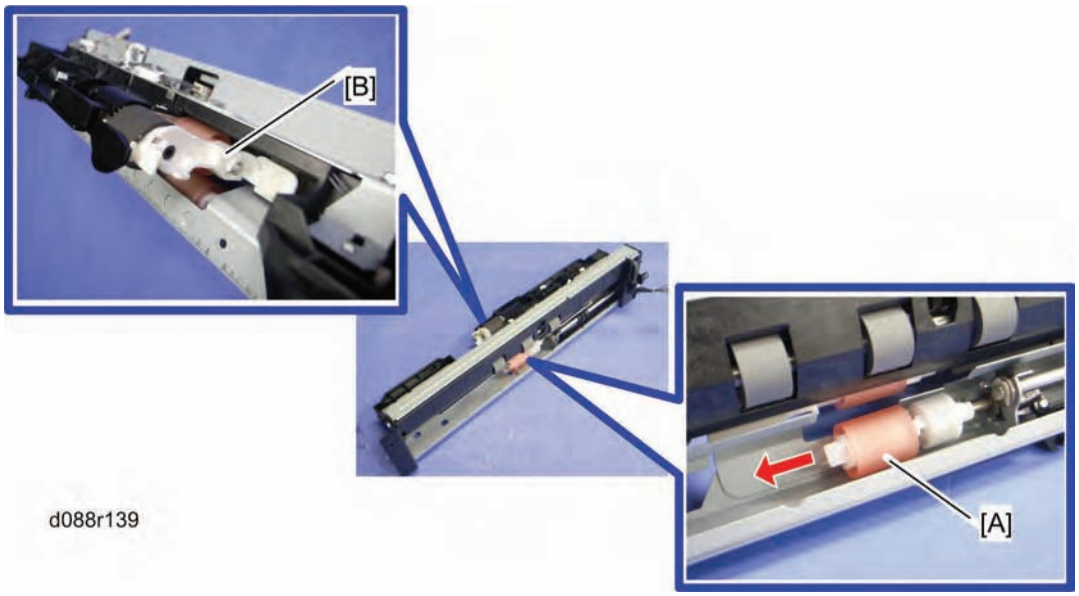

2. Separation roller [A] (x 1)
3. Roller holder [B] (x 1)

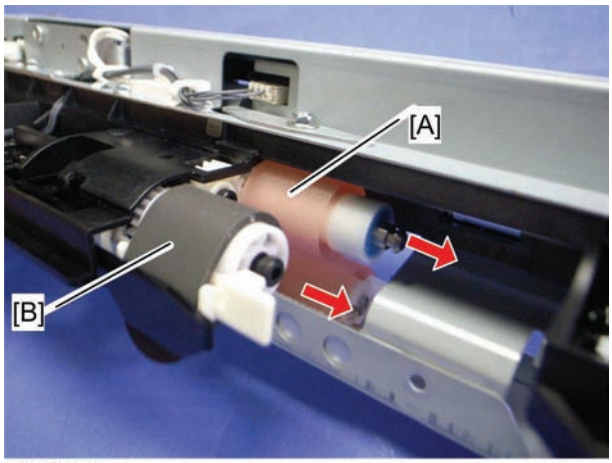

d088r743

4. Feed roller [A]
5. Pick-up belt unit [B]

WWW.SERVICE-MANUAL.NET

4.12.3 TRAY LIFT MOTOR

1. Rear cover (☛ p.4-15)
2. PSU bracket (☛ p.4-135 "PSU")
3. High voltage supply board bracket (☛ p.4-137)

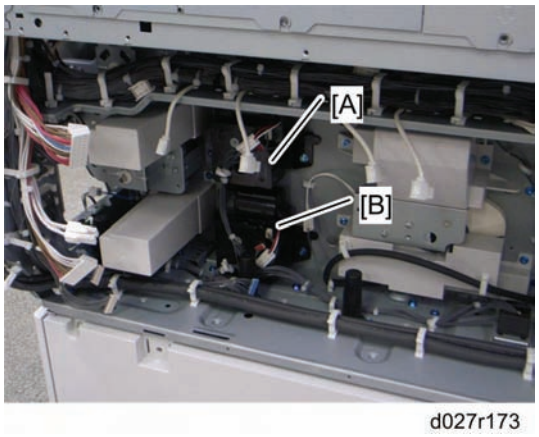

4. Tray lift motor 1 [A] or 2 [B] (x 2, x 3, x 1 each)

4.12.4 VERTICAL TRANSPORT, PAPER OVERFLOW, PAPER END AND PAPER FEED SENSOR

1. Rear cover (☛ p.4-15)
2. Right rear cover (☛ p.4-16)
3. Paper feed unit (☛ p.4-112)

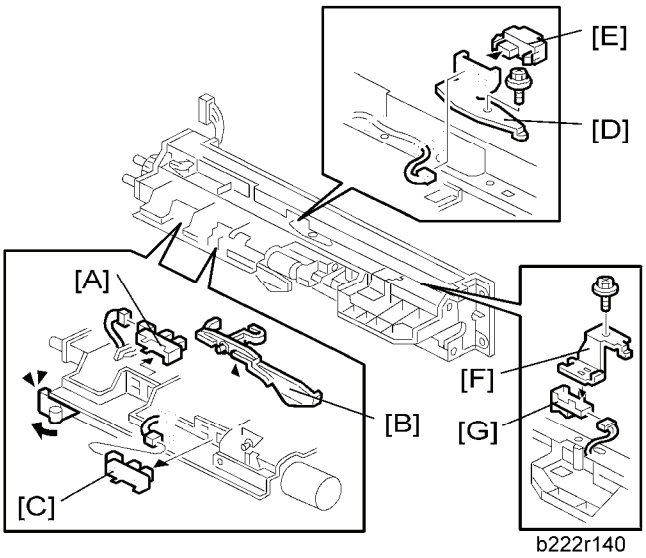

4. Paper overflow sensor [A]
5. Paper end feeler [B] and paper end sensor [C] (hook, x 1 each)
6. Vertical transport sensor bracket [D] (x 1, x 1)
7. Vertical transport sensor [E] (x 1, hook)
8. Paper feed sensor bracket [F] (x 1)

WWW.SERVICE-MANUAL.NET

9. Paper feed sensor [G] (x 1, hook)

4.12.5 REGISTRATION SENSOR

1. Rear cover (p.4-15)
2. Right rear cover (p.4-16)

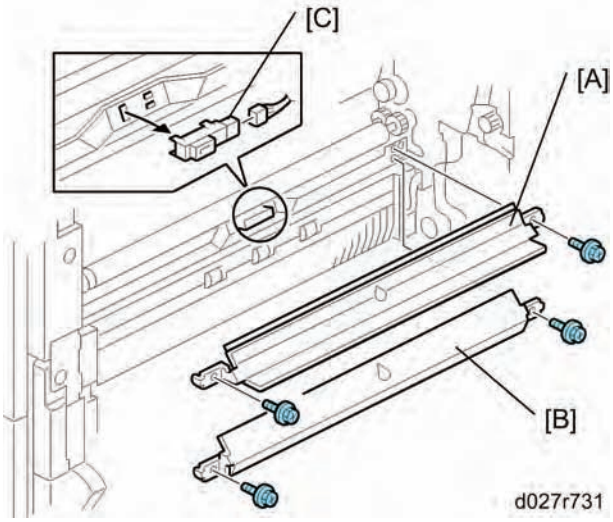

3. Paper guide plate 1 [A] and 2 [B] (x 2 each)
4. Registration sensor [C] (x 1, hook)

4.12.6 BY-PASS PAPER SIZE SENSOR AND BY-PASS PAPER LENGTH SENSOR

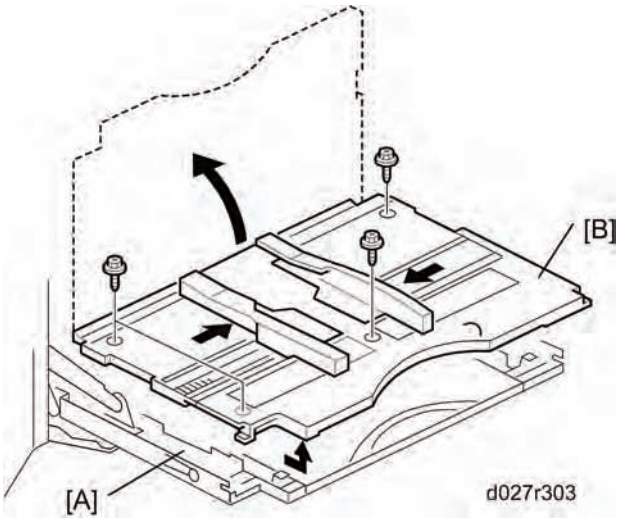

1. Open the by-pass tray [A].
2. Move the side fences to the center.
3. By-pass tray cover [B] (x 4)

WWW.SERVICE-MANUAL.NET

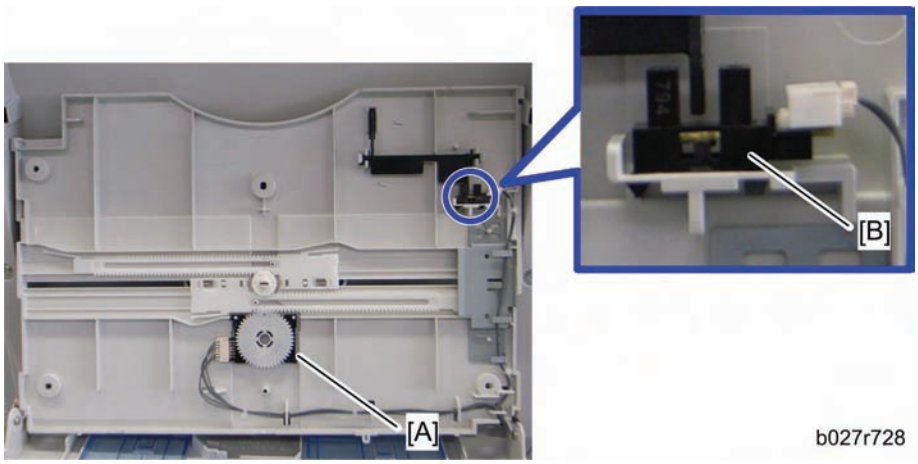

4. By-pass paper size sensor [A] (x 1).
5. By-pass paper length sensor [B] (x 1)

When reinstalling the by-pass paper size sensor

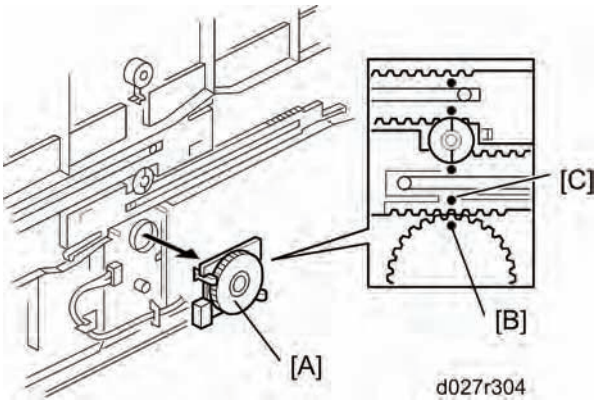

1. Adjust the projection [A] of the left side fence bar (it must be centered).
2. Install the by-pass paper size detection switch so that the hole [B] in this switch faces the projection [C] of the left side fence bar.
3. Reassemble the copier.
4. Plug in and turn on the main power switch.
5. Check this switch operation with SP5803-011 (By-pass paper size < Input Check).

- Display on the LCD -

Paper Size	Display	Paper Size	Display
A3 SEF	00001110	A5 SEF	00001011
B4 SEF	00001100	B6 SEF	00000011
A4 SEF	00001101	A6 SEF	00000111
B5 SEF	00001001	Smaller A6 SEF	00001111

WWW.SERVICE-MANUAL.NET

4.12.7 BY-PASS BOTTOM TRAY

1. Open the right door.
2. By-pass tray cover (☛ p.4-115 "By-pass Paper Size Sensor and By-pass Paper Length Sensor")

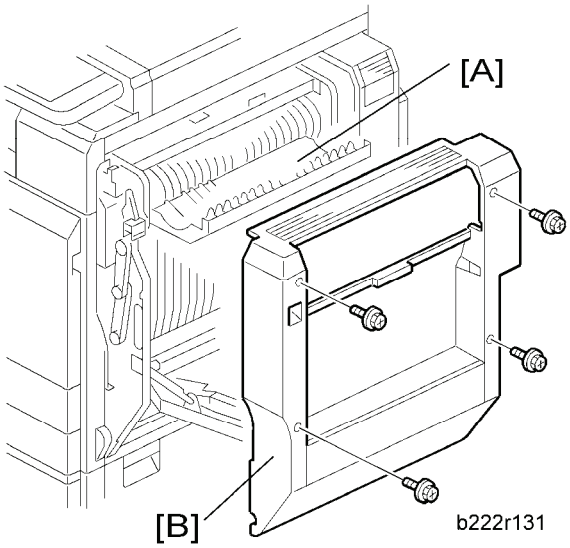

3. Open the duplex door [A].
4. Right door cover [B] (x 4)

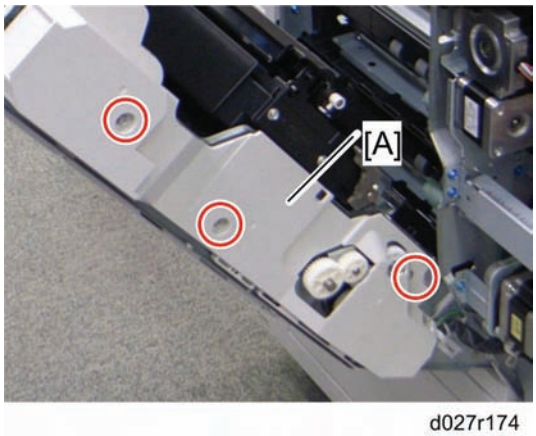

5. Right door rear cover [A] (x 3)

WWW.SERVICE-MANUAL.NET

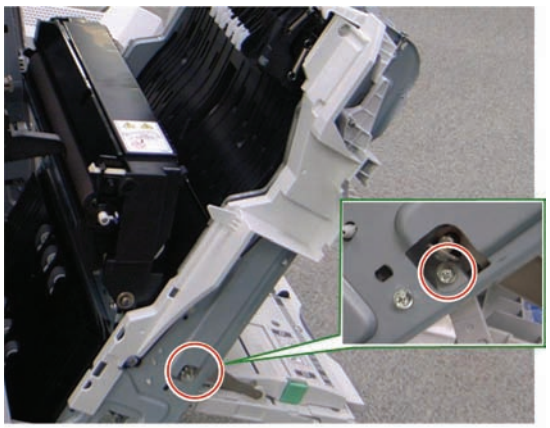

d027r175

6. Remove the screw at the front side (x 1).

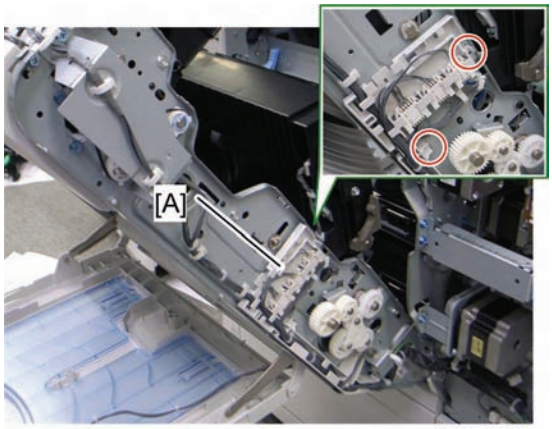

d027r177

7. Remove the cover [A] (2 hooks).

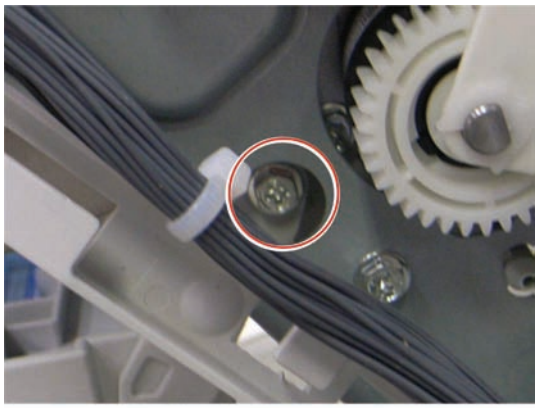

d027r178

8. Remove the screw at the rear side.

WWW.SERVICE-MANUAL.NET

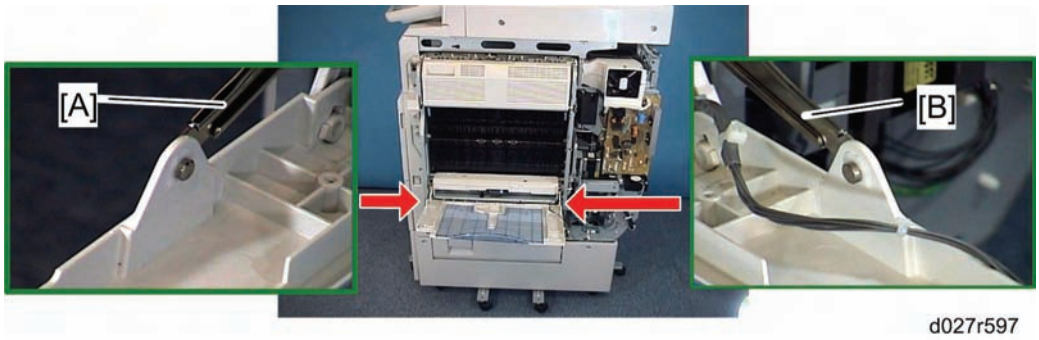

9. Release the front [A] and rear [B] arms (x 1 each).

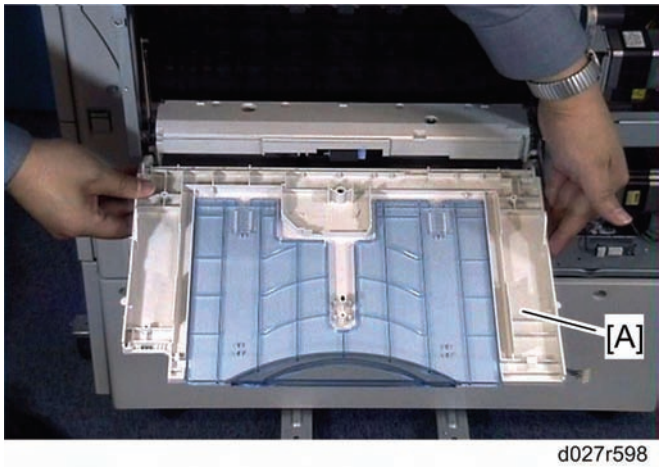

10. By-pass bottom tray [A]

WWW.SERVICE-MANUAL.NET

4.12.8 BY-PASS PAPER END SENSOR

1. Right door cover (☛ p.4-117 "By-pass Bottom Tray")

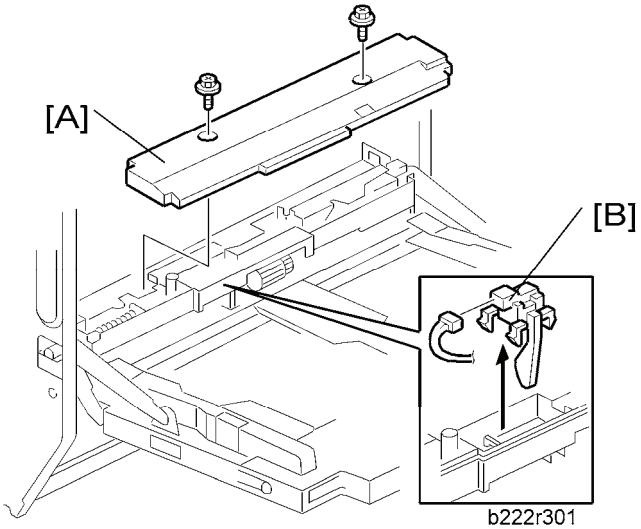

2. By-pass feed unit cover [A] (x 2).
3. By-pass paper end sensor [B] (x 1, hook)

WWW.SERVICE-MANUAL.NET

4.12.9 BY-PASS PICK-UP, FEED AND SEPARATION ROLLER, TORQUE LIMITER

1. Right door cover (☛ p.4-117 "By-pass Bottom Tray")

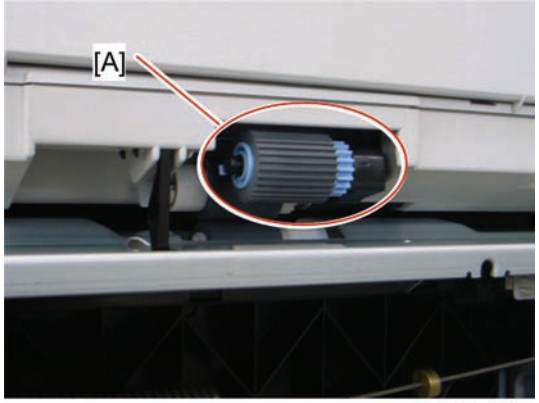

d027r179

2. By-pass pick-up roller [A] (hook)

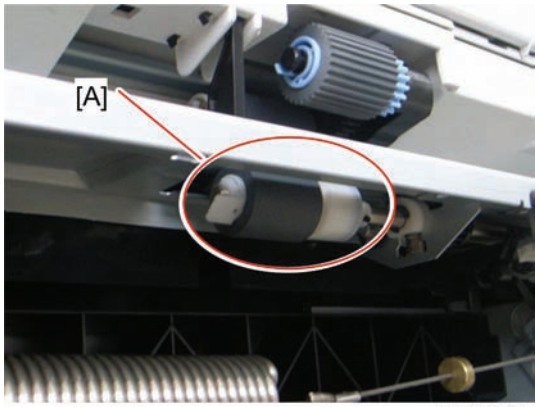

d027r180

3. By-pass feed roller [A] (x 1)
4. By-pass feed unit cover (☛ p.4-119 "By-pass Paper End Sensor")

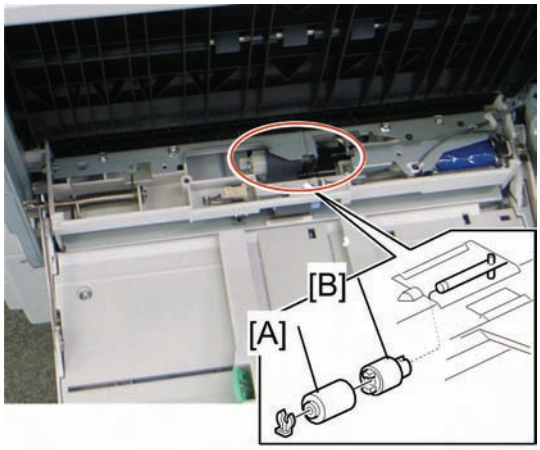

d027r302

5. By-pass separation roller [A] (x 1)
6. Torque limiter [B]

WWW.SERVICE-MANUAL.NET

4.12.10 BY-PASS FEED CLUTCH

1. Open the right door.
2. Right door rear cover (☛ p.4-117 "By-pass Bottom Tray")

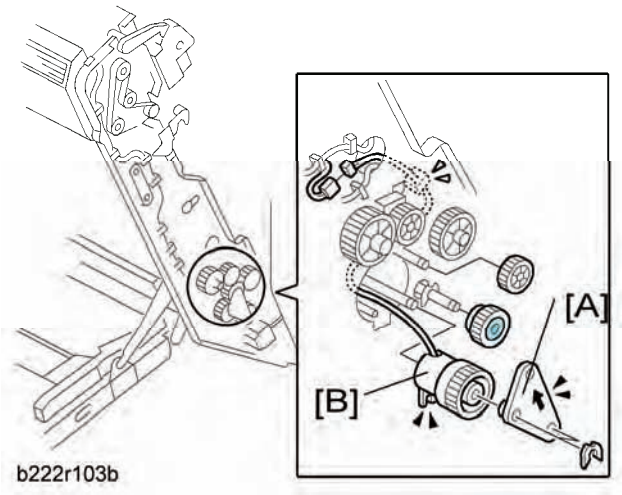

3. By-pass feed clutch holder [A] (x 2)
4. By-pass feed clutch [B] (x 1, x 1)

WWW.SERVICE-MANUAL.NET

4.12.11 PAPER EXIT UNIT

1. Fusing Unit (☛ p.4-87)
2. Front right cover (☛ p.4-16 "Operation Panel")
3. Image transfer belt unit (☛ p.4-55)
4. Inner Tray (☛ p.4-17)
5. Thermopile (☛ p.4-105)
6. Rear cover (☛ p.4-15)
7. Right rear cover (☛ p.4-16)
8. Fusing duct (☛ p.4-104 "Fusing Fan")
9. Open the controller box (☛ p.4-131 "Controller Box").

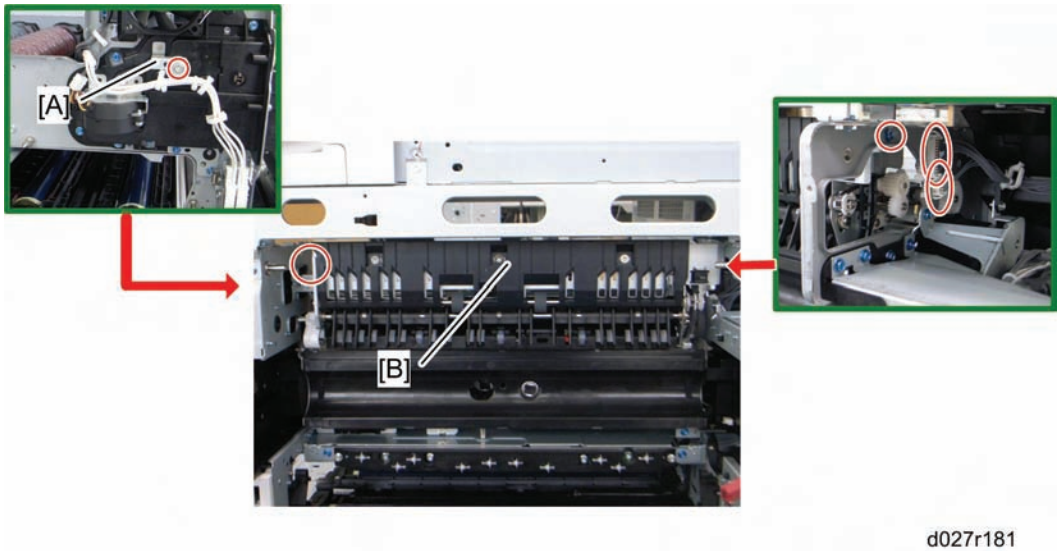

10. Gear cover [A] (x 1)
11. Paper exit unit [B] (x 2, x 2)

WWW.SERVICE-MANUAL.NET

4.12.12 FUSING EXIT, PAPER OVERFLOW, JUNCTION PAPER JAM AND PAPER EXIT SENSOR

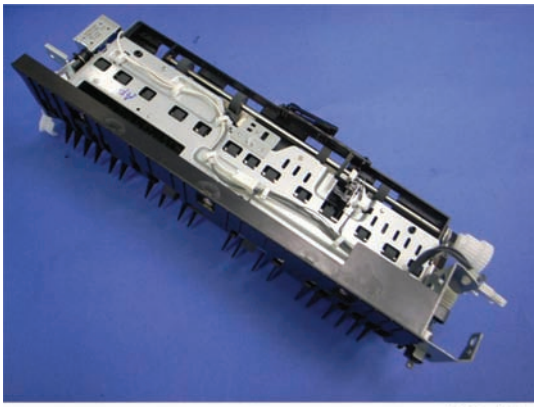

d027r182

1. Paper exit unit (☛ p.4-112)

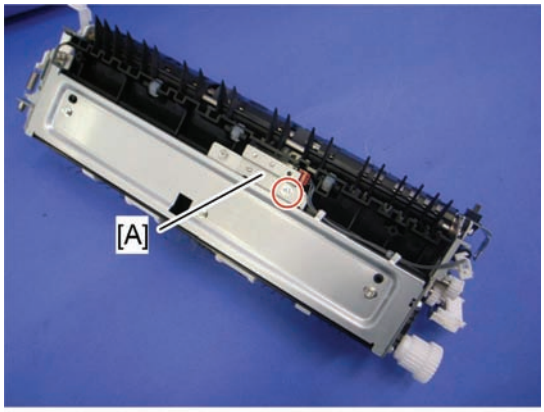

d027r183

2. Fusing exit sensor bracket [A] (x 1, x 1)
3. Remove the fusing exit sensor from the fusing exit sensor bracket (x 1)

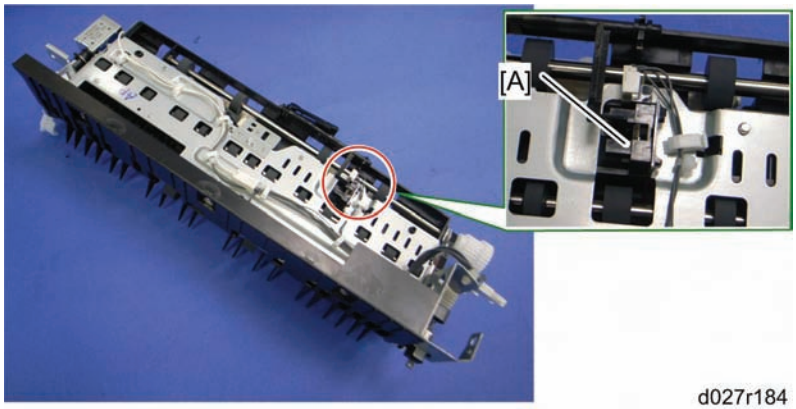

d027r184

4. Paper overflow sensor [A] (x 1, hook)

WWW.SERVICE-MANUAL.NET

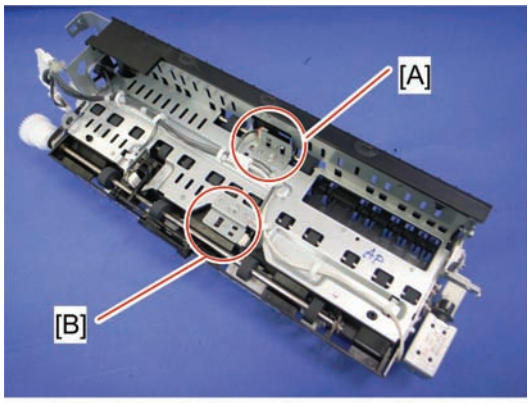

d027r185

5. Junction paper jam sensor bracket [A] (x 1, x 1)
6. Remove the junction paper jam sensor from the junction paper jam sensor bracket (hook)
7. Paper exit sensor bracket [B] (x 1, x 1)
8. Remove the paper exit sensor from the paper exit sensor bracket (hook)

WWW.SERVICE-MANUAL.NET

4.13 DUPLEX UNIT

4.13.1 DUPLEX UNIT

1. Rear cover (☛ p.4-15)
2. Right rear cover (☛ p.4-16)
3. Right door cover (☛ p.4-61 "Paper Transfer Unit")

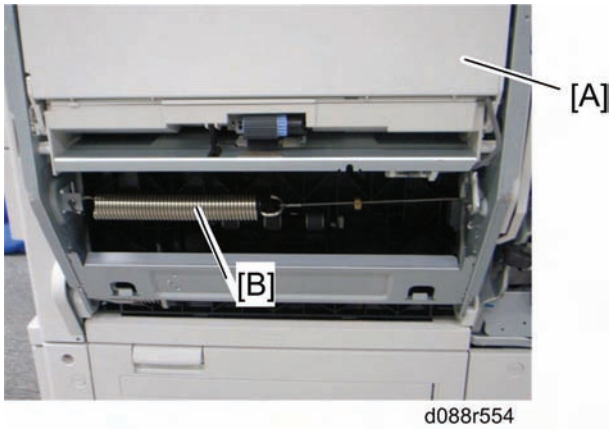

4. Close the right door [A].
5. Remove the spring [B].
6. Open the right door [A].

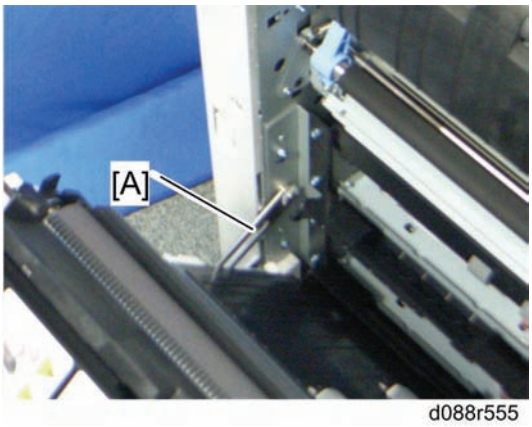

7. Release the front link [A] (x 1).
8. Keep the right door fully open.

WWW.SERVICE-MANUAL.NET

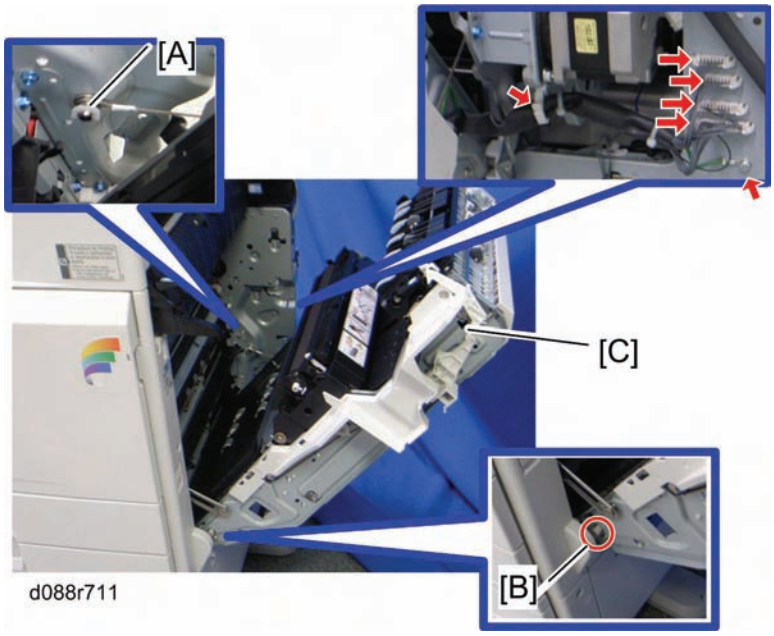

9. Hold the right door, and then release the wire [A] (x 1).

CAUTION

- Keep holding the right door before removing the right door completely. Otherwise, the right door can fall down and injure you.

10. Press the projection [B] to pull the right door shaft into the unit, and then remove the duplex unit [C] (x 1, x 1, x 4, ground cable x 1).

4.13.2 DUPLEX DOOR SENSOR

1. Right door cover (p.4-61 "Paper Transfer Unit")
2. Open the right door.

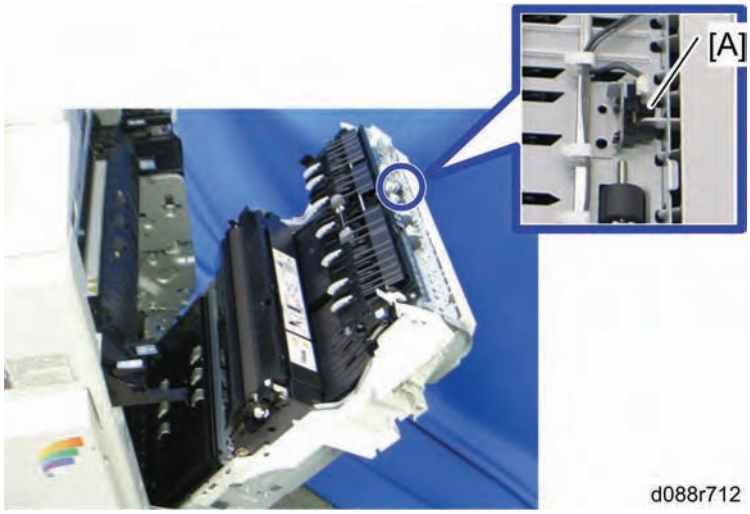

3. Duplex door sensor [A] (x 1, hook)

WWW.SERVICE-MANUAL.NET

4.13.3 DUPLEX ENTRANCE SENSOR

1. Right door cover (☛ p.4-61 "Paper Transfer Unit")
2. Open the right door.

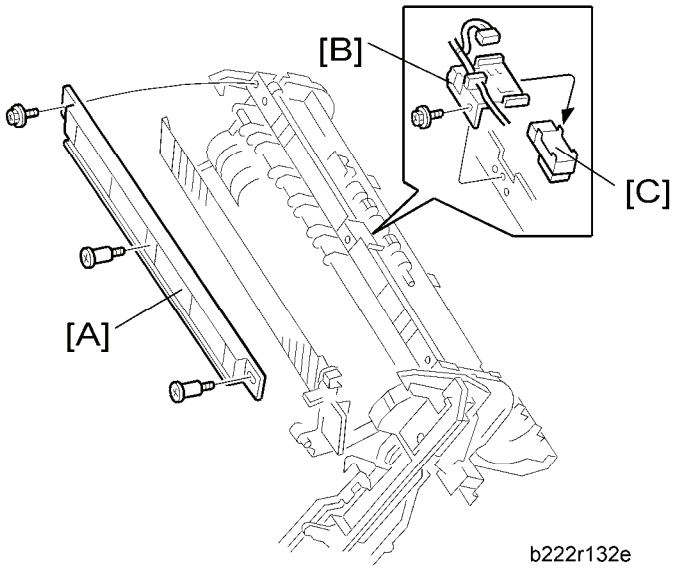

3. Duplex entrance guide [A] (x1, stepped screw x 2)
4. Duplex entrance sensor bracket [B] (x 1, x 1)
5. Duplex entrance sensor [C] (hook)

WWW.SERVICE-MANUAL.NET

4.13.4 DUPLEX EXIT SENSOR

1. Paper transfer unit (☛ p.4-61)

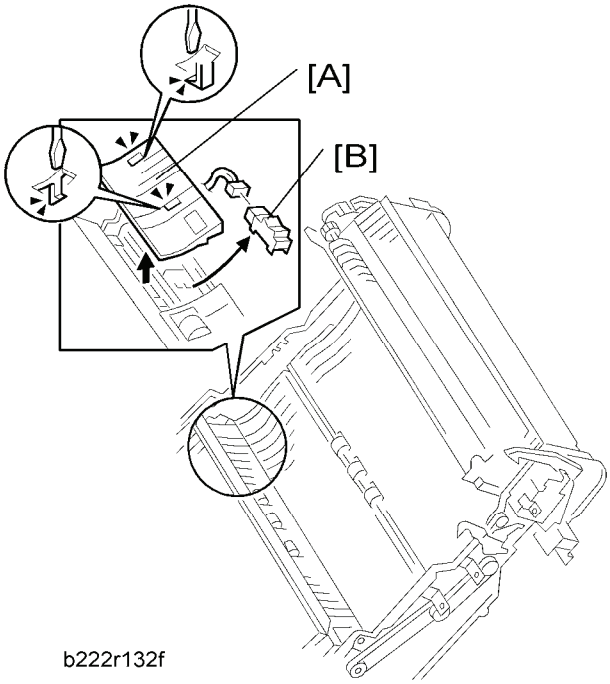

2. Guide plate [A] (two hooks)
3. Duplex exit sensor [B] (☞ x 1, hook)

WWW.SERVICE-MANUAL.NET

4.14 ELECTRICAL COMPONENTS

Important

- Always touch a grounded surface to discharge static electricity from your hands before you handle SD cards, printed circuit boards, or memory boards.

4.14.1 BOARDS

Controller Box closed

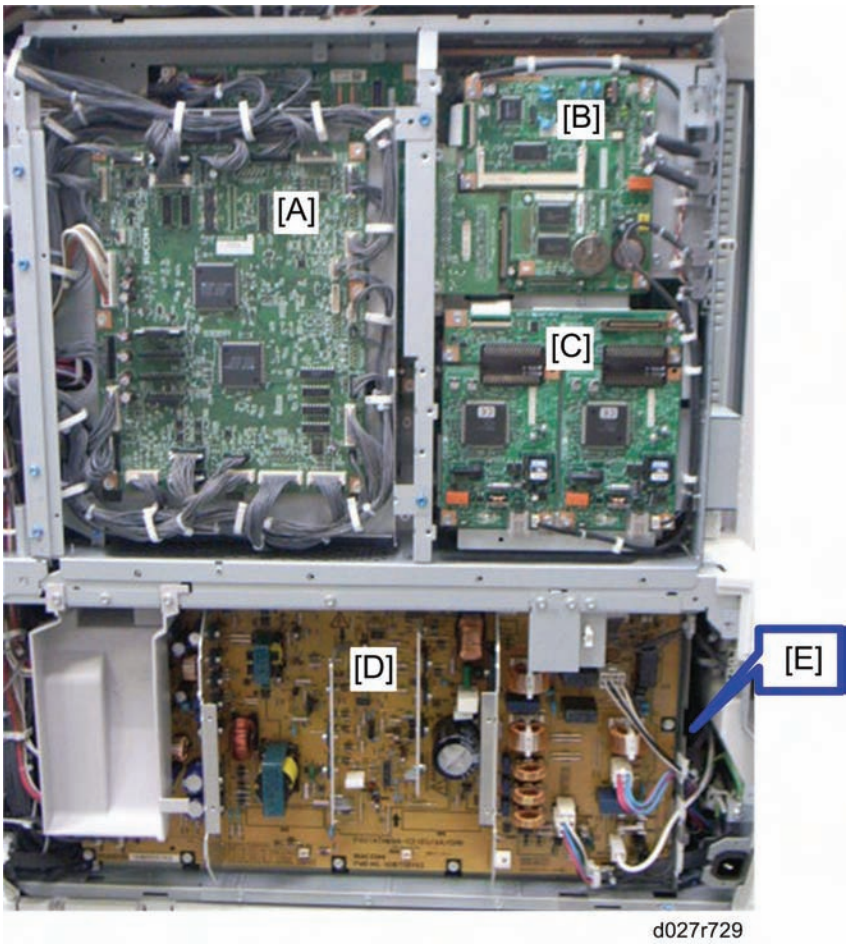

[A]	IOB
[B]	FCU (Option)
[C]	G3 Interface Unit (Option)
[D]	PSU
[E]	High Voltage Supply Board (Behind the PSU [D])

WWW.SERVICE-MANUAL.NET

Behind the IOB, FCU and G3 Interface Unit

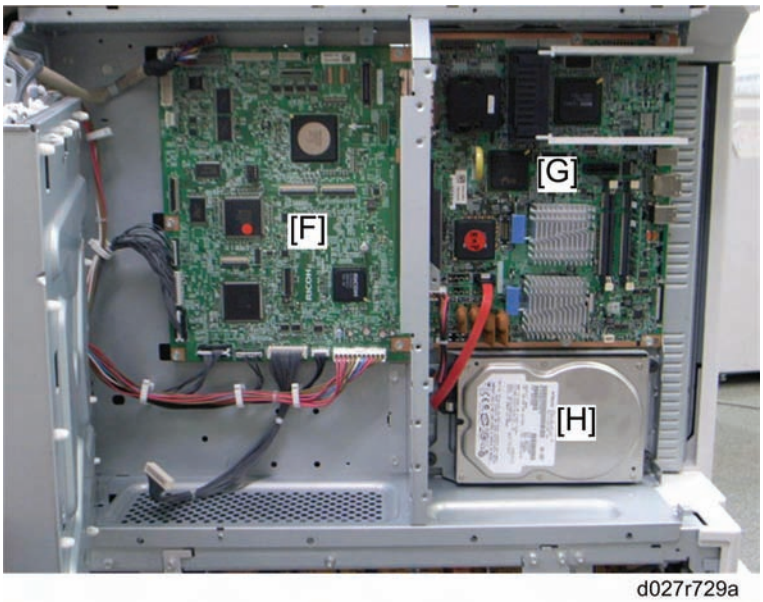

[F]	BICU
[G]	Controller Board
[H]	HDD

WWW.SERVICE-MANUAL.NET

Controller Box Open

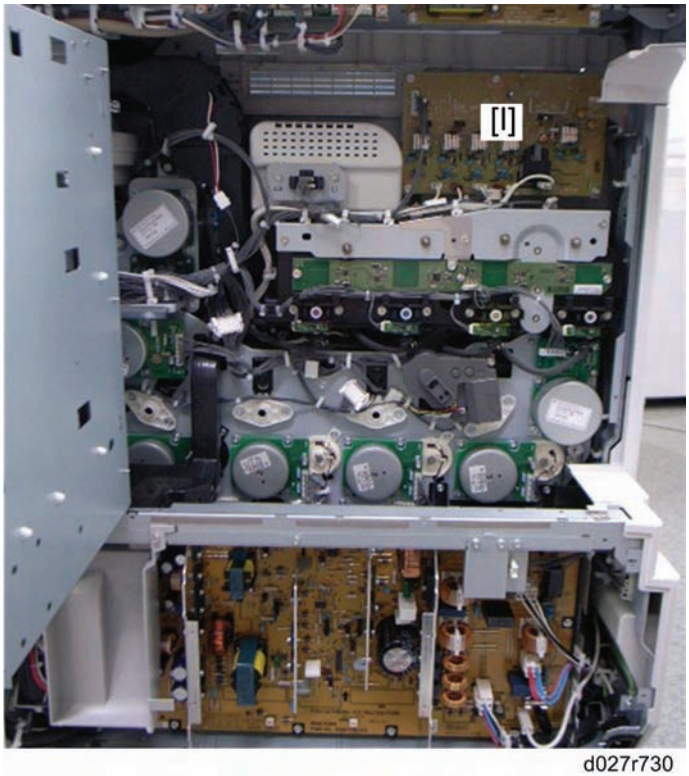

[I]	ITB Power Supply Board

WWW.SERVICE-MANUAL.NET

4.14.2 CONTROLLER UNIT

1. Controller cover (☛ p.4-14)

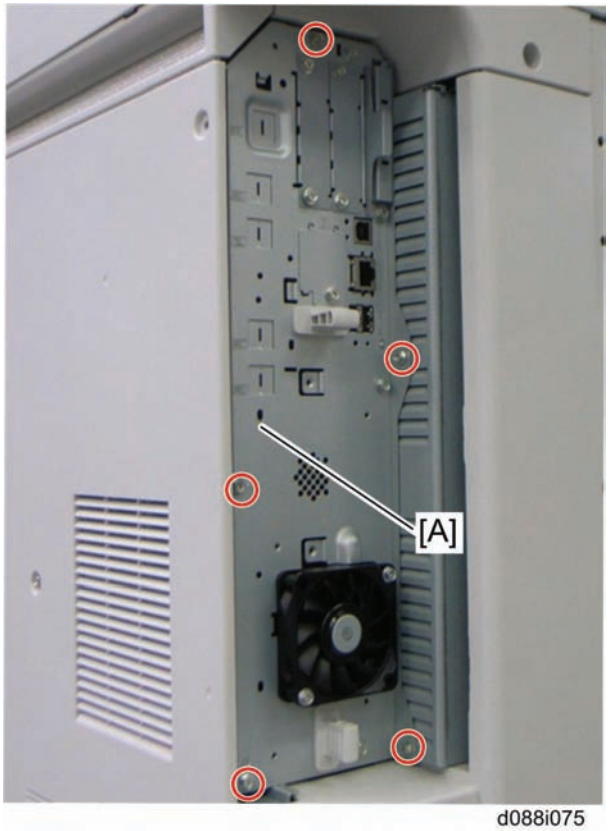

2. Controller unit [A] (x 5)

WWW.SERVICE-MANUAL.NET

4.14.3 CONTROLLER BOX RIGHT COVER

1. Rear cover (☛ p.4-15)

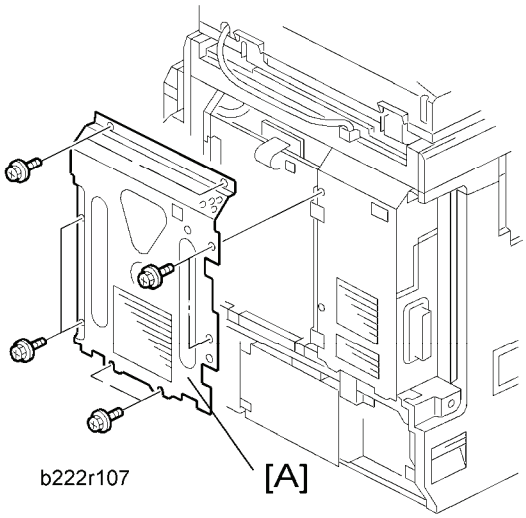

2. Controller box right cover [A] (x 8)

4.14.4 CONTROLLER BOX

When opening the controller box

1. Rear cover (☛ p.4-15)

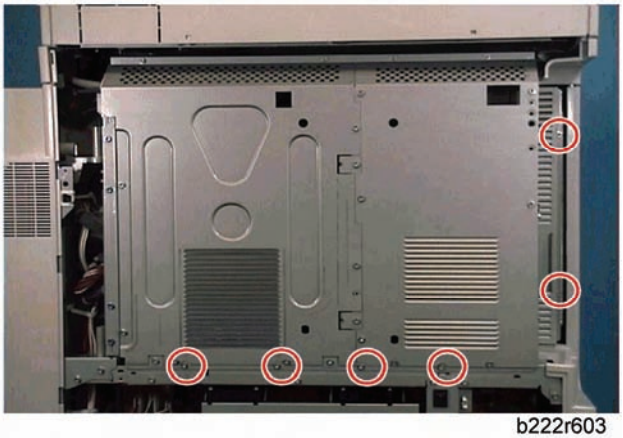

2. Remove six screws (red circles).

WWW.SERVICE-MANUAL.NET

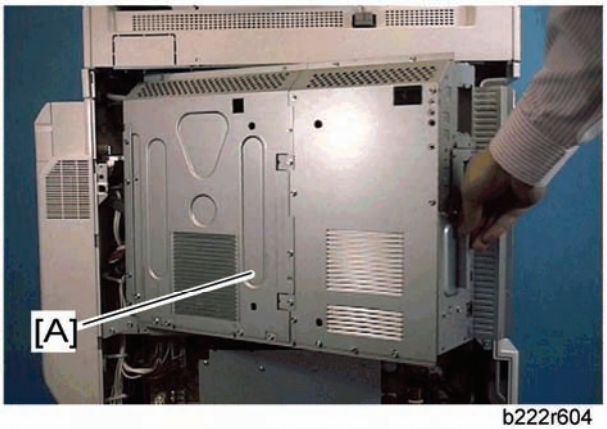

b222r604

3. Open the controller box [A].

When removing the controller box

1. Rear cover (☛ p.4-15)
2. Right rear cover (☛ p.4-16)
3. Controller box right cover (☛ p.4-130)

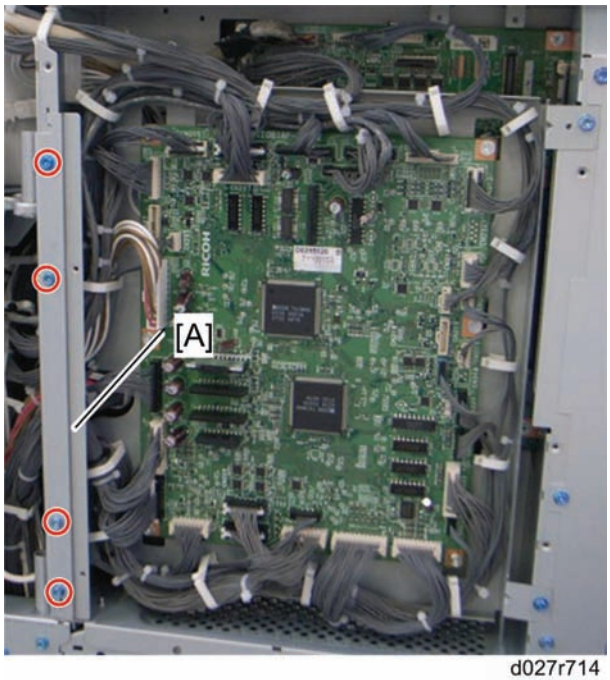

d027r714

4. Remove the controller box stay [A] (x 4).

WWW.SERVICE-MANUAL.NET

d027r713

5. Move the IOB bracket [A] aside (x 4, x All).

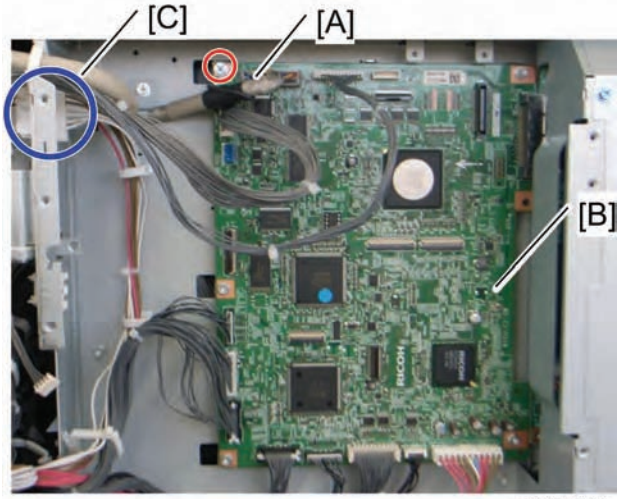

d027r715

6. Disconnect the scanner interface cable [A] (ground cable)
7. Release all clamps on the controller box frame.
8. Disconnect all connectors on the BICU [B] board.
9. Disconnect the connector [C] at the outer controller box and at the inner controller box.

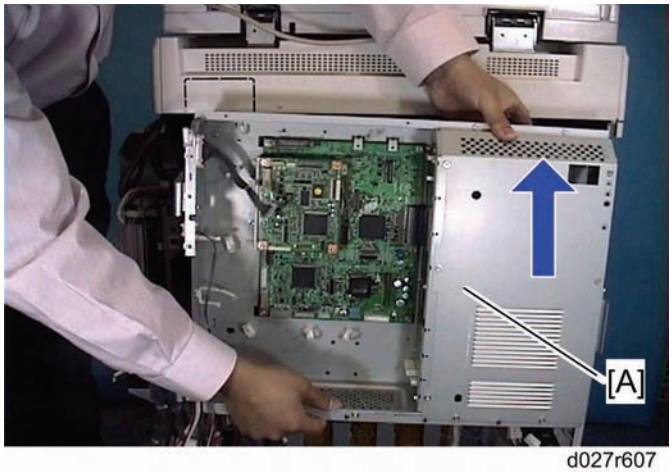

d027r607

WWW.SERVICE-MANUAL.NET

10. Lift up the controller box [A], and then remove it.

4.14.5 IOB (IN/OUT BOARD)

1. Rear cover (☛ p.4-15)
2. Controller box right cover (☛ p.4-130)

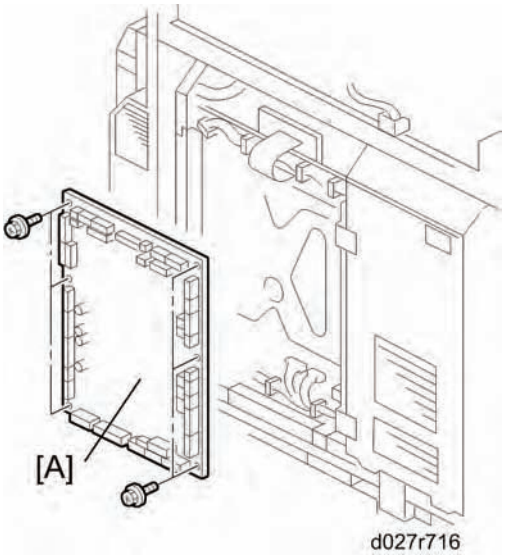

3. IOB [A] (🖉 x 6, All 🖐s)

WWW.SERVICE-MANUAL.NET

4.14.6 BICU

1. Rear cover (☛ p.4-15)
2. Controller box right cover (☛ p.4-130)
3. Disconnect the harness (CN225) on the IOB board.
4. Move the IOB bracket aside (☛ p.4-131 "Controller Box")

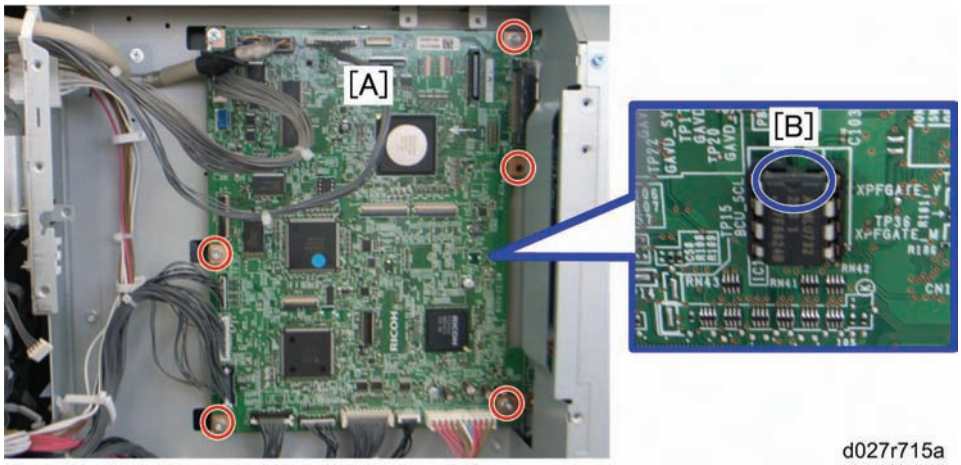

5. BICU [A] (x 5, x All)

Note

- Make sure the NVRAM is correctly installed on the BICU. Insert the NVRAM in the NVRAM slot with the "half-moon" pointing [B] to the upward side.

When installing the new BICU

Remove the NVRAM from the old BICU. Then install it on the new BICU after you replace the BICU. Replace the NVRAM (☛ "NVRAM Replacement Procedure") if the NVRAM on the old BICU is defective.

Note

- Make sure you print out the SMC reports ("SP Mode Data" and "Logging Data") before you replace the NVRAM.

CAUTION

- Keep NVRAMs away from any objects that can cause static electricity. Static electricity can damage NVRAM data.
- Make sure that the DIP-switch settings on the old BICU are the same for the new BICU when. Do not change the DIP switches on the BICU in the field.
- Make sure the serial number is input in the machine for the NVRAM data, if not, SC 995-001 occurs.

WWW.SERVICE-MANUAL.NET

4.14.7 PSU

PSU bracket

1. Rear cover (☛ p.4-15)

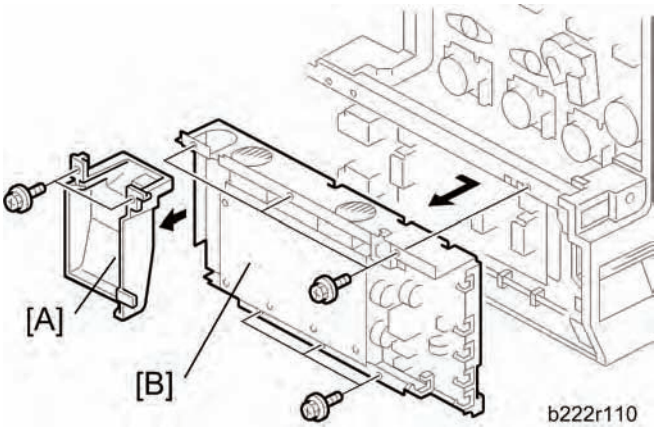

2. Ventilation duct [A] (x 2)
3. PSU bracket [B] (x 6, x All, x All)

PSU board

1. Rear cover (☛ p.4-15)
2. Ventilation duct (☛ p.4-135 "PSU")

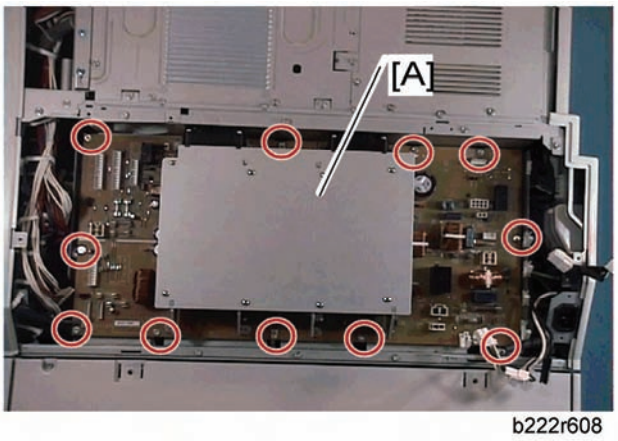

3. PSU board [A] (x 11, x All, x All)

WWW.SERVICE-MANUAL.NET

4.14.8 POWER RELAY SWITCH

1. PSU bracket (☛ p.4-135 "PSU")
2. Pull out tray 2.

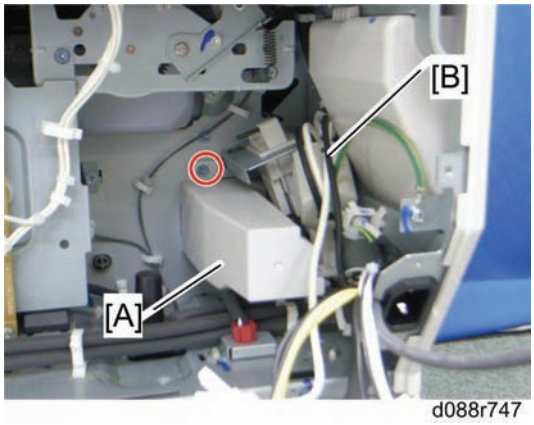

3. Tray left rail cover [A] (x 1)
4. Take aside the cords and ferrite core [B] (x 2).

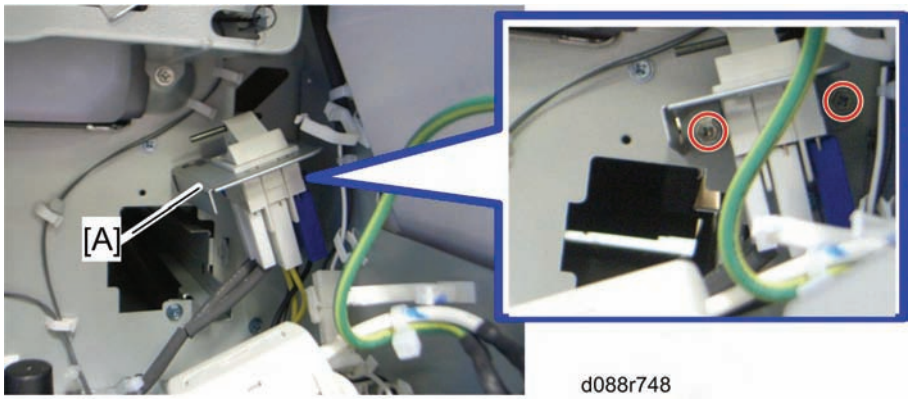

5. Power relay switch [A] (x 2)

WWW.SERVICE-MANUAL.NET

4.14.9 ITB POWER SUPPLY BOARD

1. Rear cover (☛ p.4-15)
2. Open the controller box (☛ p.4-131 "Controller Box")

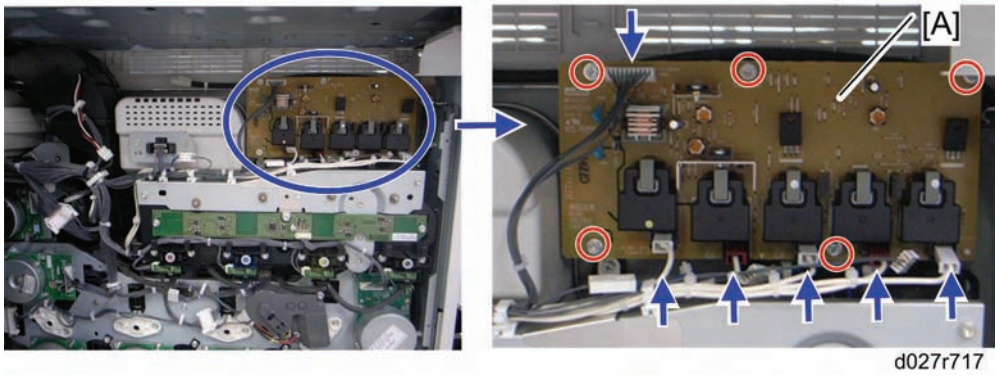

3. ITB power supply board [A] (x 5, x 6)

4.14.10 HIGH VOLTAGE SUPPLY BOARD

1. Rear cover (☛ p.4-15)
2. PSU bracket (☛ p.4-135 "PSU")

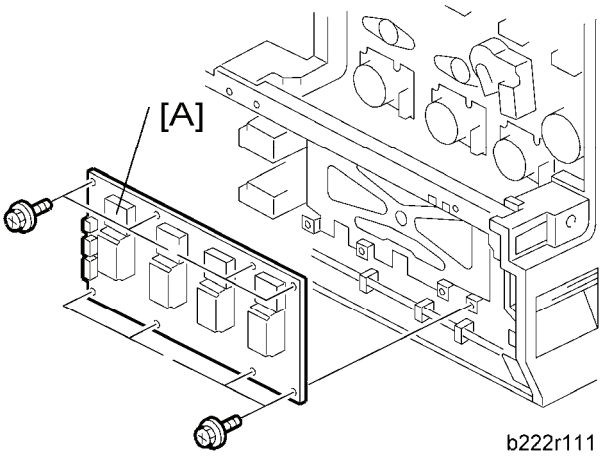

3. High voltage supply board [A] (x 8, x All, x 2)

WWW.SERVICE-MANUAL.NET

4.14.11 HIGH VOLTAGE SUPPLY BOARD BRACKET

1. Rear cover (☛ p.4-15)
2. PSU bracket (☛ p.4-135 "PSU")

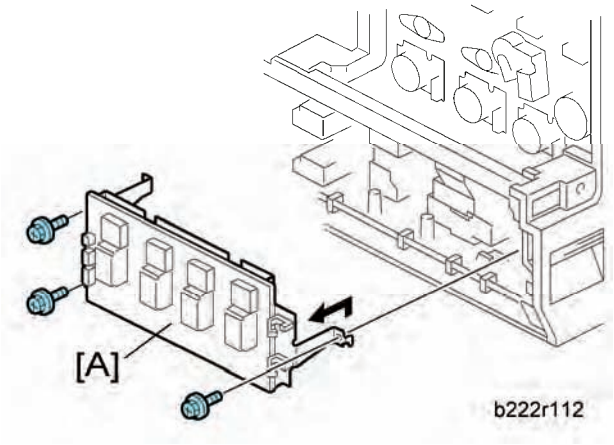

3. High voltage supply board bracket [A] (x 3, x All, x 2)

4.14.12 IH INVERTER

1. Rear cover (☛ p.4-15)
2. Right rear cover (☛ p.4-16)
3. Fusing duct (☛ p.4-104 "Fusing Fan")

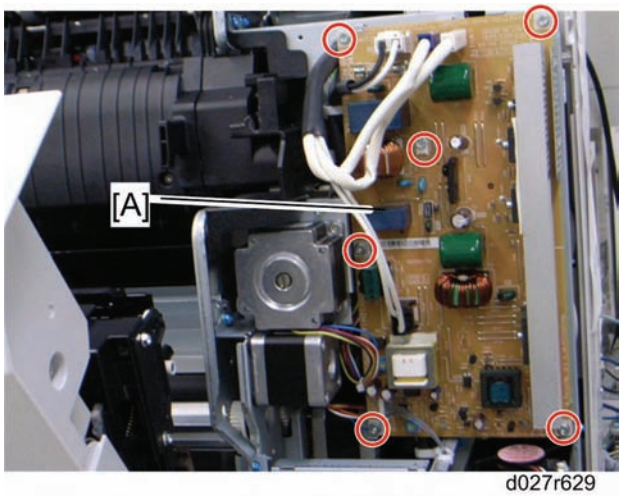

4. IH inverter [A] (x 6, x 5)

WWW.SERVICE-MANUAL.NET

4.14.13 CONTROLLER BOARD

1. Controller unit (☛ p.4-130)

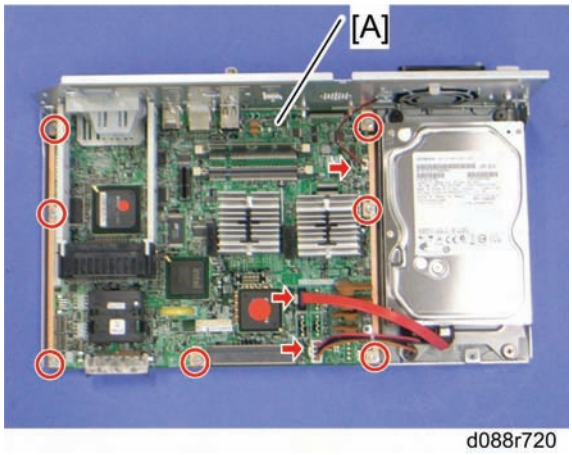

2. Controller board [A] (x 7, x 3)

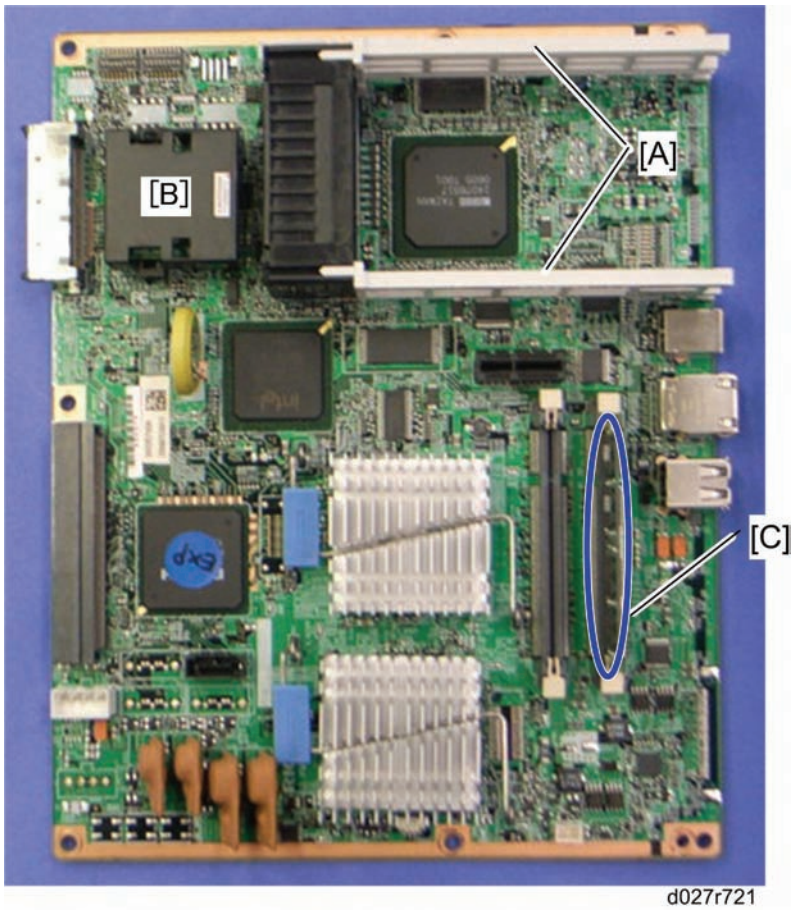

3. Interface rails [A], NV-RAM [B], RAM-DIMM [C]

WWW.SERVICE-MANUAL.NET

When installing the new controller board

Remove the NVRAM from the old controller board. Then install it on the new controller board after you replace the controller board. Replace the NVRAM if the NVRAM on the old controller board is defective.

Note

- Make sure you print out the SMC reports ("SP Mode Data" and "Logging Data") before you replace the NVRAM.

CAUTION

- Keep NVRAMs away from any objects that can cause static electricity. Static electricity can damage NVRAM data.
- Make sure the NVRAM is correctly installed on the controller board.
- Make sure that the DIP-switch settings on the old controller board are the same for the new controller board. Do not change the DIP switches on the controller board in the field.

4.14.14 HDD FAN

1. Controller unit (☛ p.4-130)

2. HDD fan [A] (x 2, x 1)

When installing the HDD fan

Make sure that the HDD fan is installed with its decal facing the right side of the machine.

WWW.SERVICE-MANUAL.NET

4.14.15 HDD

1. Controller unit (☛ p.4-130)

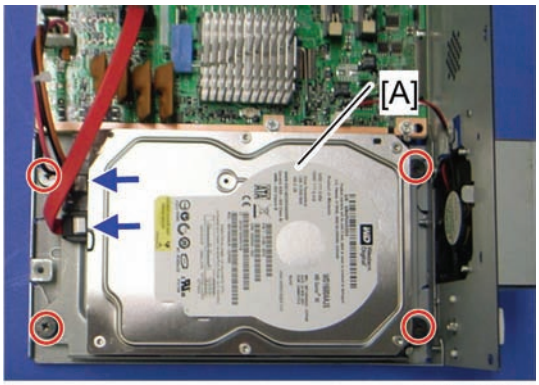

d027r718

2. Remove the HDD [A] with the bracket (x 4, x 2).

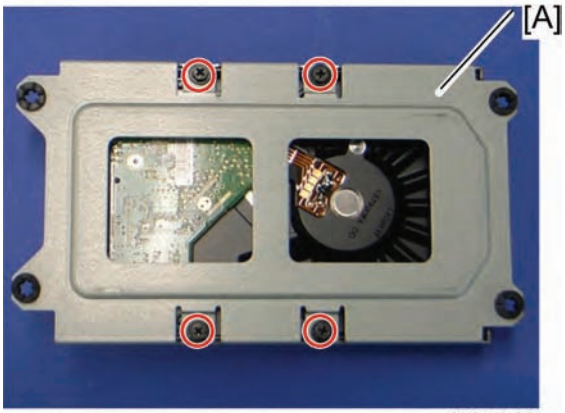

d027r719

3. Remove the HDD from the bracket [A] (x 4).

When installing a new HDD unit

1. Turn the main power switch on. The disk is automatically formatted.
2. Install the stamp data using "SP5853".
3. Switch the machine off and on to enable the fixed stamps for use.

WWW.SERVICE-MANUAL.NET

4.14.16 NVRAM REPLACEMENT PROCEDURE

NVRAM on the BICU

Note: Make sure that you have the SMC report (factory settings). This report comes with the machine.

1. Output the SMC data ("ALL") (☛ SP5-990-001).
2. Turn the main switch OFF.
3. Remove the VM card from SD Card Slot #2 (lower slot).
4. Insert a blank SD card into Slot #2, then turn the main power ON.
5. Upload the NVRAM data to the blank SD Card using **SP5-824-001** (NVRAM Data Upload).
6. Turn OFF the Main Switch and then unplug the AC power cord.
7. Remove the SD Card containing the NVRAM data from Slot #2.
8. Replace the NVRAM on the BICU with a new one.
9. Plug in the AC power cord, and then turn ON the Main Power Switch.

   Important: When you do this, SC995-02 (Defective NVRAM) will be displayed. However, **DO NOT** turn OFF the Main Power Switch. Continue with this procedure.
10. Re-insert the SD card that you removed in Step 7 back into Slot #2.
11. Download the old NVRAM data from the SD card onto the new NVRAM using **SP5-825-001** (NVRAM Data Download).

    Note: This will take about 2 or 3 minutes.
12. Turn the Main Switch OFF and then remove the SD Card from SD Card from slot #2.
13. Insert the VM Card into Slot #2.
14. Turn ON the Main Power Switch.
15. Output the SMC data ("ALL") using **SP5-990-001**, and make sure that it matches the SMC data you printed out in step 1 above (except for the value of the total counter).

    Note: The value of the total counter is reset to "0" when the NVRAM is replaced.
16. Do Process Control Self-check.
17. Do ACC for the Copier function.
18. Do ACC for the Printer function.

    Important: Do all of the following if **SP5-824-001** (NVRAM Data Upload) and **SP5-825-001** (NVRAM Data Download) cannot be performed for some reason:

    1. Replace the NVRAM and Security SD card together as a set with new ones.
    2. Manually enter all data on the SMC report (factory settings).
    3. Enter the serial number and destination code.

       Important: Serial Number and Destination require a special access procedure. Please contact the Hotline to have the call escalated to the regional representative.
    4. Install a new Security SD functions (Data overwrite and HDD encryption) again.

WWW.SERVICE-MANUAL.NET

NVRAM on the Controller Board

Make sure that you have the SMC report (factory settings). This report comes with the machine.

1. Output the SMC data ("ALL") using SP5-990-001.
2. Turn off the main switch.
3. Remove the VM card from SD card Slot #2 (lower slot).
4. Insert a blank SD card into Slot #2, and then turn on the main power switch.
5. Upload the NVRAM data to the blank SD card using SP5-824-001 (NVRAM Data Upload).
6. Turn off the main power switch, and then unplug the AC power cord.
7. Remove the SD card containing the NVRAM data from Slot #2.
8. Replace the NVRAM on the ***Controller Board*** with a new one.
9. Plug in the AC power cord, and then turn ON the main power switch.

   Important When you do this, SC995-02 (Defective NVRAM) will be displayed. However, DO NOT turn off the main power switch. Continue with this procedure.
10. Re-insert the SD card that you removed in Step 7 back into Slot #2.
11. Download the old NVRAM data from the SD card onto the new NVRAM using SP5-825-001 (NVRAM Data Download).

    Note This will take about 2 or 3 minutes.
12. Turn off the main power switch, and then remove the SD card from Slot #2.
13. Insert the VM card into Slot #2.
14. Turn on the main power switch.
15. Output the SMC data ("ALL") using SP5-990-001, and make sure that it matches the SMC data you printed out in step 1 above (except for the value of the total counter).

    Note The value of the total counter is reset to "0" when the NVRAM is replaced.
16. Do Process Control Self-check.
17. Do ACC for the Copier function.
18. Do ACC for the Printer function.

    Important

    Do all of the following if **SP5-824-001** (NVRAM Data Upload) and **SP5-825-001** (NVRAM Data Download) cannot be performed for some reason:

    5. Replace the NVRAM and Security SD card together as a set with new ones.
    6. Manually enter all data on the SMC report (factory settings).
    7. Install a new Security SD function (Data overwrite and HDD encryption) again.

WWW.SERVICE-MANUAL.NET

4.15 USING DIP SWITCHES

4.15.1 CONTROLLER BOARD

DIP SW No.	OFF	ON
1	Boot-up from Flash Memory	Boot-up from SD card
2 to 8	Factory Use Only: Do not change the switch settings.	

4.15.2 BICU BOARD

DIP SW No.	OFF	ON
1 and 2	Factory Use Only: Do not change the switch settings.	

WWW.SERVICE-MANUAL.NET

WWW.SERVICE-MANUAL.NET

SYSTEM MAINTENANCE

REVISION HISTORY		
Page	**Date**	**Added/Updated/New**
		None

WWW.SERVICE-MANUAL.NET

WWW.SERVICE-MANUAL.NET

5. SYSTEM MAINTENANCE

5.1 SERVICE PROGRAM MODE

CAUTION

- Make sure that the data-in LED (⇲) is not on before you go into the SP mode. This LED indicates that some data is coming to the machine. When the LED is on, wait for the copier to process the data.

5.1.1 SP TABLES

See "Appendices" for the following information:

- System SP Tables
- Printer SP Tables
- Scanner SP Tables

5.1.2 ENABLING AND DISABLING SERVICE PROGRAM MODE

Note

- The Service Program Mode is for use by service representatives only. If this mode is used by anyone other than service representatives for any reason, data might be deleted or settings might be changed. In such case, product quality cannot be guaranteed any more.

Entering SP Mode

For details, ask your supervisor.

Exiting SP Mode

- Press "Exit" on the LCD twice to return to the copy window.

5.1.3 TYPES OF SP MODES

- System SP: SP modes related to the engine functions
- Printer SP: SP modes related to the controller functions
- Scanner SP: SP modes related to the scanner functions
- Fax SP: SP modes related to the fax functions

Select one of the Service Program modes (System, Printer, Scanner, or Fax) from the touch panel as shown in the diagram below after you access the SP mode. This section explains the functions of the System/Printer/Scanner SP modes. Refer to the Fax service manual for

WWW.SERVICE-MANUAL.NET

the Fax SP modes.

SP Mode Button Summary

Here is a short summary of the touch-panel buttons.

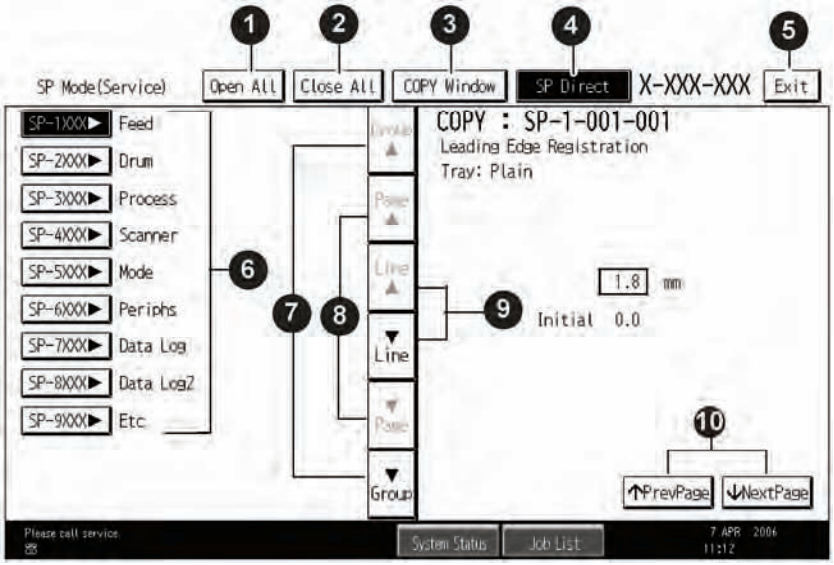

1	Opens all SP groups and sublevels.
2	Closes all open groups and sublevels and restores the initial SP mode display.
3	Opens the copy window (copy mode) so you can make test copies. Press SP Mode (highlighted) in the copy window to return to the SP mode screen,
4	Enter the SP code directly with the number keys if you know the SP number. Then press #. (The required SP Mode number will be highlighted when pressing #. If not, just press the required SP Mode number.)
5	Press two times to leave the SP mode and return to the copy window to resume normal operation.

WWW.SERVICE-MANUAL.NET

6	Press any Class 1 number to open a list of Class 2 SP modes.
7	Press to scroll the show to the previous or next group.
8	Press to scroll to the previous or next display in segments the size of the screen display (page).
9	Press to scroll the show the previous or next line (line by line).
10	Press to move the highlight on the left to the previous or next selection in the list.

Switching Between SP Mode and Copy Mode for Test Printing

1. In the SP mode, select the test print. Then press "Copy Window".
2. Use the copy window (copier mode), to select the appropriate settings (paper size, etc.) for the test print.
3. Press Start to start the test print.
4. Press SP Mode (highlighted) to return to the SP mode screen and repeat from step 1.

Selecting the Program Number

Program numbers have two or three levels.

1. Refer to the Service Tables to find the SP that you want to adjust before you begin.
2. Press the Group number on the left side SP Mode window that contains the SP that you want to adjust.
3. Use the scrolling buttons in the center of the SP mode window to show the SP number that you want to open. Then press that number to expand the list.
4. Use the center touch-panel buttons to scroll to the number and title of the item that you want to set and press it. The small entry box on the right activates and shows the below default or the current settings.

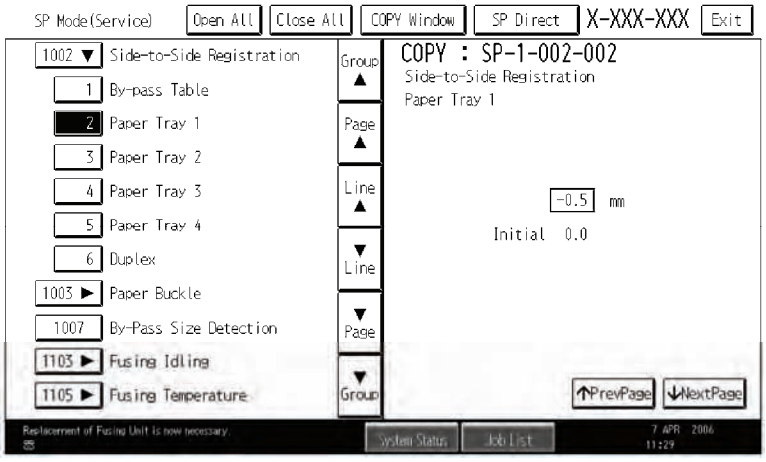

Note

WWW.SERVICE-MANUAL.NET

System Maintenance

- Refer to the Service Tables for the range of allowed settings.

5. Do this procedure to enter a setting:
   - Press to toggle between plus and minus and use the keypad to enter the appropriate number. The number you enter writes over the previous setting.
   - Press to enter the setting. (The value is not registered if you enter a number that is out of range.)
   - Press "Yes" when you are prompted to complete the selection.
6. If you need to perform a test print, press Copy Window to open the copy window and select the settings for the test print. Press Start and then press SP Mode (highlighted) in the copy window to return to the SP mode display.
7. Press Exit two times to return to the copy window when you are finished.

Exiting Service Mode

Press the Exit key on the touch-panel.

Service Mode Lock/Unlock

At locations where the machine contains sensitive data, the customer engineer cannot operate the machine until the Administrator turns the service mode lock off. This function makes sure that work on the machine is always done with the permission of the Administrator.

1. If you cannot go into the SP mode, ask the Administrator to log in with the User Tool and then set "Service Mode Lock" to OFF after he or she logs in:
   User Tools > System Settings > Administrator Tools > Service Mode Lock > OFF
   - This unlocks the machine and lets you get access to all the SP codes.
   - The CE can service the machine and turn the machine off and on. It is not necessary to ask the Administrator to log in again each time the machine is turned on.
2. Go into the SP mode and set SP5169 to "1" if you must use the printer bit switches.
3. After machine servicing is completed:
   - Change SP5169 from "1" to "0".
   - Turn the machine off and on. Tell the administrator that you have completed servicing the machine.
   - The Administrator will then set the "Service Mode Lock" to ON.

WWW.SERVICE-MANUAL.NET

5.1.4 REMARKS

Display on the Control Panel Screen

The maximum number of characters which can show on the control panel screen is limited to 30 characters. For this reason, some of the SP modes shown on the screen need to be abbreviated. The following are abbreviations used for the SP modes for which the full description is over 20 characters.

<table>
<tr><td colspan="2">Paper Weight
Thin paper: 52-59 g/m^2
Plain Paper: 60-90 g/m^2, 16-24lb.
Middle Thick: 91-105 g/m^2, 24-28lb.
Thick Paper 1: 106-169 g/m^2, 28.5-44.9lb.
Thick Paper 2: 170-220 g/m^2, 45-58lb.
Thick Paper 3: 221-256 g/m^{2,} 59-68lb
Thick 4: 257 g/m^2-300 g/m^2, 68.4-79.8lb</td></tr>
<tr><td>Paper Type
N: Normal paper
MTH: Middle thick paper
TH: Thick paper</td><td>Paper Feed Station
P: Paper tray
B: By-pass table</td></tr>
<tr><td colspan="2">Color Mode [Color]
[K]: Black in B&W mode
[Y], [M], or [C]: Yellow, Magenta, or Cyan in Full Color mode
[YMC]: Only for Yellow, Magenta, and Cyan
[FC]: Full Color mode
[FC, K], [FC, Y], [FC, M], or [FC, C]: Black, Yellow, Magenta, or Cyan in full color mode</td></tr>
<tr><td>Print Mode
S: Simplex
D: Duplex</td><td>Process Speed
L: Low speed (77 mm/s)
M: Middle speed (154 mm/s)
H: High speed (C2.5d: 230, C2.5: 205 mm/s)</td></tr>
</table>

System Maintenance

WWW.SERVICE-MANUAL.NET

Others

The following symbols are used in the SP mode tables.

FA: Factory setting

(Data may be adjusted from the default setting at the factory. Refer to the factory setting sheets enclosed. You can find it under the jammed paper removal decal.)

DFU: Design/Factory Use only

Do not touch these SP modes in the field.

A sharp (#) to the right hand side of the mode number column means that the main switch must be turned off and on to effect the setting change.

An asterisk (*) to the right hand side of the mode number column means that this mode is stored in the NVRAM. If you do a RAM clear, this SP mode will be reset to the default value.

"ENG" and "CTL" show which NVRAM contains the data.

- ENG: NVRAM on the BICU board
- CTL: NVRAM on the controller board

The settings of each SP mode are explained in the right-hand column of the SP table in the following way.

[Adjustable range / **Default setting** / Step] Alphanumeric

Note

- If "Alphanumeric" is written to the right of the bracket as shown above, the setting of the SP mode shows on the screen using alphanumeric characters instead of only numbers. However, the settings in the bracket in the SP mode table are explained by using only the numbers.

SSP: This denotes a "Special Service Program" mode setting.

WWW.SERVICE-MANUAL.NET

5.2 MAIN SP TABLES-1

5.2.1 SP1-XXX (FEED)

1001	[Leading Edge Registration] Leading Edge Registration Adjustment (Tray Location, Paper Type, Color Mode), Paper Type -> Plain, Thick 1or Thick 2		
	Adjusts the leading edge registration by changing the registration motor operation timing for each mode.		
002	Tray: Plain	*ENG	[–9 to 9 / **0.0** / 0.1 mm/step]
003	Tray: Middle Thick	*ENG	
004	Tray: Thick 1	*ENG	
005	Tray: Thick 2	*ENG	
007	By-pass: Plain	*ENG	
008	By-pass: Middle Thick	*ENG	
009	By-pass: Thick 1	*ENG	
010	By-pass: Thick 2	*ENG	
011	By-pass: Thick 3	*ENG	
013	Duplex: Plain	*ENG	
014	Duplex: Middle Thick	*ENG	
015	Duplex: Thick 1	*ENG	
016	Tray: Thick 3	*ENG	[–9 to 9 / **0.0** / 0.1 mm/step]
017	Tray: Plain:1200	*ENG	
018	Tray: Middle Thick:1200	*ENG	
019	Tray: Thick 1:1200	*ENG	
020	By-pass: Plain:1200	*ENG	

System Maintenance

WWW.SERVICE-MANUAL.NET

021	By-pass: Middle Thick:1200	*ENG	
022	By-pass: Thick 1:1200	*ENG	
023	Duplex: Plain:1200	*ENG	
024	Duplex: Middle Thick:1200	*ENG	
025	Duplex: Thick 1:1200	*ENG	

1002	[Side to Side Reg.] Side-to-Side Registration Adjustment		
	Adjusts the side-to-side registration by changing the laser main scan start position for each mode.		
001	By-pass Table	*ENG	[–4 to 4 / **0.0** / 0.1 mm/step]
002	Paper Tray 1	*ENG	
003	Paper Tray 2	*ENG	
004	Paper Tray 3	*ENG	
005	Paper Tray 4	*ENG	
006	Duplex	*ENG	
007	Paper Tray 5	*ENG	
008	Large Capacity Tray	*ENG	

WWW.SERVICE-MANUAL.NET

1003	[Paper Buckle] Paper Buckle Adjustment (Tray Location, Paper Type), Paper Type: N: Normal, TH: Thick		
	Adjusts the amount of paper buckle at the registration roller by changing the paper feed timing.		
002	Paper Tray1: Plain	*ENG	[–9 to 5 / **-2** / 1 mm/step]
003	Tray1: Middle Thick	*ENG	[–9 to 5 / **-1** / 1 mm/step]
004	Paper Tray1: Thick1	*ENG	[–9 to 5 / **-2** / 1 mm/step]
007	Paper Tray2/3/4/5/LCT: Plain	*ENG	
008	Tray 2/3/4/5/LCT: Middle Thick	*ENG	[–9 to 5 / **-1** / 1 mm/step]
009	Paper Tray2/3/4/5/LCT: Thick 1	*ENG	[–9 to 5 / **-2** / 1 mm/step]
012	By-pass: Plain	*ENG	[–9 to 5 / **0** / 1 mm/step]
013	By-pass: Middle Thick	*ENG	
014	By-pass: Thick 1	*ENG	[–9 to 5 / **-2** / 1 mm/step]
018	Duplex: Plain	*ENG	[–9 to 5 / **0** / 1 mm/step]
019	Duplex: Middle Thick	*ENG	
020	Duplex: Thick 1	*ENG	[–9 to 5 / **-2** / 1 mm/step]
021	Paper Tray1: Plain: 1200	*ENG	[–9 to 5 / **0** / 1 mm/step]
022	Tray1: Middle Thick: 1200	*ENG	
023	Tray 2/3/4/5LCT: Plain: 1200	*ENG	
024	Tray 2/3/4/5LCT: Mid: 1200	*ENG	
025	By-pass: Plain: 1200	*ENG	
026	By-pass: Middle Thick: 1200	*ENG	
027	Paper Tray1: Thick1: 1200	*ENG	[–9 to 5 / **-2** / 1 mm/step]
028	Paper Tray2/3/4/5/LCT: Thick 1:1200	*ENG	

System Maintenance

WWW.SERVICE-MANUAL.NET

029	By-pass: Thick 1: 1200	*ENG	
030	Duplex: Plain: 1200	*ENG	[–9 to 5 / **0** / 1 mm/step]
031	Duplex: Middle Thick: 1200	*ENG	
032	Duplex: Thick 1: 1200	*ENG	[–9 to 5 / **-2** / 1 mm/step]

1007	[By-Pass Size Detection] By-Pass Size Detection Display		
001	LG	*ENG	[0 or 1 / **0** / -] 0: OFF, 1: ON
	Enables or disables the automatic paper size detection function of the by-pass tray. This SP determines what paper size the machine detects if the detected size is less than 8.5”. 0: OFF (Letter/SEF), 1: ON (Legal/SEF)		

1101	[Reload Permit Setting]		
	Specifies the settings of the reload permit for cold temperature in color mode.		
001	Pre-rotation Start Temp.	*ENG	[0 to 200 / **0** / 1 deg/step]
002	Reload Target Temp.:Center	*ENG	[120 to 180 / **180** / 1 deg/step]
003	Reload Target Temp.:Press	*ENG	[0 to 200 / **120** / 1 deg/step]
004	Temp.:Delta:Cold:Center	*ENG	[0 to 200 / **5** / 1 deg/step]
005	Temp.:Delta:Cold:End	*ENG	[40 to 200 / **100** / 1 deg/step]
006	Temp.:Delta:Cold:Press	*ENG	[0 to 200 / **C2.5c: 55, C2.5d: 45** / 1 deg/step]
	[Forced Ready Set] Specifies the setting of the forced reload permit for cold temperature in color mode.		
007	Time:Cold	*ENG	[0 to 100 / **C2.5c: 20, C2.5d: 34** / 1 sec/step]
	[Reload Permit Setting] Specifies the settings of the reload permit for warm temperature in color mode.		

WWW.SERVICE-MANUAL.NET

008	Temp.:Delta:Warm:Center	*ENG	[0 to 200 / **C2.5c: 15, C2.5d: 10** / 1 deg/step]
009	Temp.:Delta:Warm:End	*ENG	[40 to 200 / **100** / 1 deg/step]
010	Temp.:Delta:Warm:Press	*ENG	[0 to 200 / **C2.5c: 55, C2.5d: 45** / 1 deg/step]
	[Forced Ready Set] Specifies the setting of the forced reload permit for warm temperature in color mode.		
011	Time:Warm	*ENG	[0 to 100 / **C2.5c: 20, C2.5d: 34** / 1 sec/step]
	[Reload Permit Setting] Specifies the settings of the reload permit for hot temperature in color mode.		
012	Temp.:Delta:Hot:Center	*ENG	[0 to 200 / **C2.5c: 15, C2.5d: 10** / 1 deg/step]
013	Temp.:Delta:Hot:End	*ENG	[40 to 200 / **100** / 1 deg/step]
014	Temp.:Delta:Hot:Press	*ENG	[0 to 200 / **C2.5c: 55, C2.5d: 45** / 1 deg/step]
	[Forced Ready Set] Specifies the setting of the forced reload permit for hot temperature in color mode.		
015	Time:Hot	*ENG	[0 to 100 / **C2.5c: 20, C2.5d: 34** / 1 sec/step]
	[Reload Permit Setting Temp.] Specifies the settings of the reload permit for cold temperature in BW mode.		
016	Temp.:Delta:Cold:BW:Center	*ENG	[0 to 200 / **C2.5c: 10, C2.5d: 5** / 1 deg/step]
017	Temp.:Delta:Cold:BW:End	*ENG	[40 to 200 / **100** / 1 deg/step]
018	Temp.Delta:Cold:BW:Press	*ENG	[0 to 200 / **C2.5c: 60, C2.5d: 50** / 1 deg/step]
	[Forced Ready Set] Specifies the setting of the forced reload permit for cold temperature in BW mode.		

WWW.SERVICE-MANUAL.NET

019	Time:Cold:BW	*ENG	[0 to 100 / **C2.5c: 20, C2.5d: 34** / 1 sec/step]
	[Reload Permit Setting] Specifies the settings of the reload permit for cold temperature in BW mode 2.		
020	Temp.:Delta:Cold:BW2:Center	*ENG	[0 to 200 / **C2.5c: 10, C2.5d: 5** / 1 deg/step]
021	Temp.:Delta:Cold:BW2:End	*ENG	[40 to 200 / **100** / 1 deg/step]
022	Temp.Delta:Cold:BW2:Press	*ENG	[0 to 200 / **C2.5c: 70, C2.5d: 50** / 1 deg/step]
	[Forced Ready Set] Specifies the setting of the forced reload permit for cold temperature in BW mode 2.		
023	Time:Cold:BW2	*ENG	[0 to 100 / **C2.5c: 20, C2.5d: 34** / 1 sec/step]

WWW.SERVICE-MANUAL.NET

1102	[Feed Permit Setting]		
	Specified the settings of the paper feeding timing.		
001	Temp.:Lower Delta:Center	*ENG	[0 to 200 / **5** / 1 deg/step]
002	Temp.:Lower Delta:End	*ENG	[0 to 200 / **100** / 1 deg/step]
003	Temp.:Upper Delta:Center	*ENG	[0 to 200 / **100** / 1 deg/step]
004	Temp.:Upper Delta:End	*ENG	[0 to 200 / **100** / 1 deg/step]
005	Temp.:Lower Delta:Press	*ENG	[0 to 200 / **100** / 1 deg/step]
006	Rotation Time	*ENG	[0 to 100 / **0** / 1 sec/step]
007	Temp.:Lower Delta:Center:Sp.1	*ENG	[0 to 200 / **5** / 1 deg/step]
008	Temp.:Lower Delta:End:Sp.1	*ENG	[0 to 200 / **100** / 1 deg/step]
009	Temp.:Upper Delta:Center:Sp.1	*ENG	[0 to 200 / **100** / 1 deg/step]
010	Temp.:Upper Delta:End:Sp.1	*ENG	[0 to 200 / **100** / 1 deg/step]
011	Temp.:Lower Delta:Press:Sp.1	*ENG	[0 to 200 / **50** / 1 deg/step]
012	Rotation Time:Sp.1	*ENG	[0 to 200 / **0** / 1 sec/step]
013	Temp.:Lower Delta:Center:Sp.2	*ENG	[0 to 200 / **5** / 1 deg/step]
014	Temp.:Lower Delta:End:Sp.2	*ENG	[0 to 200 / **100** / 1 deg/step]
015	Temp.:Upper Delta:Center:Sp.2	*ENG	[0 to 200 / **15** / 1 deg/step]
016	Temp.:Upper	*ENG	[0 to 200 / **100** / 1 deg/step]

WWW.SERVICE-MANUAL.NET

	Delta:End:Sp.2		
017	Temp.:Lower Delta:Press:Sp.2	*ENG	[0 to 200 / **100** / 1 deg/step]
018	Rotation Time:Sp2	*ENG	[0 to 100 / **0** / 1 sec/step]
019	Feed Permit Time	*ENG	[0 to 200 / **120** / 1 sec/step]

1105	[Print Target Temp]		
	(Printing Mode, Roller Type, [Color], Simplex/Duplex) Roller Type –> Center and Ends: Heating roller, Pressure –> Pressure roller Paper Type -> Plain, Thin, Thick, OHP, Middle Thick, Special		
001	Plain1:FC:Center	*ENG	[120 to 200 / **C2.5c: 160, C2.5d: 165** / 1 deg/step]
	Specifies the heating roller target temperature for the ready condition in full color printing.		
002	Plain1:FC:Press	*ENG	[100 to 200 / **120** / 1 deg/step]
	Specifies the pressure roller target temperature for the ready condition in full color printing..		
003	Plain1:BW:Center	*ENG	[120 to 200 / **C2.5.5c: 150, C2.5.5d: 155** / 1 deg/step]
	Specifies the heating roller target temperature for the ready condition in BW printing.		
004	Plain1:BW:Press	*ENG	[100 to 200 / **120** / 1 deg/step]
	Specifies the pressure roller target temperature for the ready condition in BW printing.		
005	Plain2:FC:Center	*ENG	[120 to 200 / **C2.5c: 165, C2.5d: 170** / 1 deg/step]
	Specifies the heating roller target temperature for the ready condition in full color printing.		

WWW.SERVICE-MANUAL.NET

006	Plain2:FC:Press	*ENG	[100 to 200 / **120** / 1 deg/step]
	Specifies the pressure roller target temperature for the ready condition in full coloe printing.		
007	Plain2:BW:Center	*ENG	[120 to 200 / **C2.5c: 155, C2.5d: 165** / 1 deg/step]
	Specifies the heating roller target temperature for the ready condition in BW printing.		
008	Plain2:BW:Press	*ENG	[100 to 200 / **120** / 1 deg/step]
	Specifies the pressure roller target temperature for the ready condition in BW printing.		
009	Thin:FC:Center	*ENG	[120 to 200 / **C2.5c: 155, C2.5d: 160** / 1 deg/step]
010	Thin:FC:Press	*ENG	[100 to 200 / **120** / 1 deg/step]
011	Thin:BW:Center	*ENG	[120 to 200 / **C2.5c: 145, C2.5d: 150** / 1 deg/step]
012	Thin:BW:Press	*ENG	[100 to 200 / **120** / 1 deg/step]
013	M-thick:FC:Center	*ENG	[120 to 200 / **C2.5c: 170, C2.5d: 175** / 1 deg/step]
014	M-thick:FC:Press	*ENG	[100 to 200 / **120** / 1 deg/step]
015	M-thick:BW:Center	*ENG	[120 to 200 / **C2.5c: 160, C2.5d: 165** / 1 deg/step]
016	M-thick:BW:Press	*ENG	[100 to 200 / **120** / 1 deg/step]
017	Thick1:FC:Center	*ENG	[120 to 200 / **175** / 1 deg/step]
018	Thick1:FC:Press	*ENG	[100 to 200 / **120** / 1 deg/step]
019	Thick1:BW:Center	*ENG	[120 to 200 / **165** / 1 deg/step]
020	Thick1:BW:Press	*ENG	[100 to 200 / **120** / 1 deg/step]
021	Thick2:FC:Center	*ENG	[120 to 200 / **165** / 1 deg/step]

WWW.SERVICE-MANUAL.NET

022	Thick2:FC:Press	*ENG	[100 to 200 / **120** / 1 deg/step]
023	Thick2:BW:Center	*ENG	[120 to 200 / **155** / 1 deg/step]
024	Thick2:BW:Press	*ENG	[100 to 200 / **120** / 1 deg/step]
025	Thick3:FC:Center	*ENG	[120 to 200 / **170** / 1 deg/step]
026	Thick3:FC:Press	*ENG	[100 to 200 / **120** / 1 deg/step]
027	Thick3:BW:Center	*ENG	[120 to 200 / **160** / 1 deg/step]
028	Thick3:BW:Press	*ENG	[100 to 200 / **120** / 1 deg/step]
029	Special1:FC:Center	*ENG	[120 to 200 / **C2.5c: 165, C2.5d: 170** / 1 deg/step]
030	Special1:FC:Press	*ENG	[100 to 200 / **120** / 1 deg/step]
031	Special1:BW:Center	*ENG	[120 to 200 / **C2.5c: 155, C2.5d: 160** / 1 deg/step]
032	Special1:BW:Press	*ENG	[100 to 200 / **120** / 1 deg/step]
033	Special2:FC:Center	*ENG	[120 to 200 / **175** / 1 deg/step]
034	Special2:FC:Press	*ENG	[100 to 200 / **120** / 1 deg/step]
035	Special2:BW:Center	*ENG	[120 to 200 / **165** / 1 deg/step]
036	Special2:BW:Press	*ENG	[100 to 200 / **120** / 1 deg/step]
037	Special3:FC:Center	*ENG	[120 to 200 / **165** / 1 deg/step]
038	Special3:FC:Press	*ENG	[100 to 200 / **120** / 1 deg/step]
039	Special3:BW:Center	*ENG	[120 to 200 / **155** / 1 deg/step]
040	Special3:BW:Press	*ENG	[100 to 200 / **120** / 1 deg/step]
041	Envelop:Center	*ENG	[120 to 200 / **180** / 1 deg/step]
042	Envelop:Press	*ENG	[100 to 200 / **120** / 1 deg/step]
101	Plain1:FC:Center:Low Speed	*ENG	[120 to 200 / **135** / 1 deg/step]

WWW.SERVICE-MANUAL.NET

102	Plain1:FC:Press:Low Speed	*ENG	[100 to 200 / **120** / 1 deg/step]
103	Plain1:BW:Center:Low Speed	*ENG	[120 to 200 / **135** / 1 deg/step]
104	Plain1:BW:Press:Low Speed	*ENG	[100 to 200 / **120** / 1 deg/step]
105	Plain2:FC:Center:Low Speed	*ENG	[120 to 200 / **140** / 1 deg/step]
106	Plain2:FC:Press:Low Speed	*ENG	[100 to 200 / **120** / 1 deg/step]
107	Plain2:BW:Center:Low Speed	*ENG	[120 to 200 / **135** / 1 deg/step]
108	Plain2:BW:Press:Low Speed	*ENG	[100 to 200 / **120** / 1 deg/step]
109	M-thick:FC:Center:Low Speed	*ENG	[120 to 200 / **145** / 1 deg/step]
110	M-thick:FC:Press:Low Speed	*ENG	[100 to 200 / **120** / 1 deg/step]
111	M-thick:BW:Center:Low Speed	*ENG	[120 to 200 / **140** / 1 deg/step]
112	M-thick:BW:Press:Low Speed	*ENG	[100 to 200 / **120** / 1 deg/step]
113	Thick1:FC:Center:Low Speed	*ENG	[120 to 200 / **150** / 1 deg/step]
114	Thick1:FC:Press:Low Speed	*ENG	[100 to 200 / **120** / 1 deg/step]
115	Thick1:BW:Center:Low Speed	*ENG	[120 to 200 / **145** / 1 deg/step]

WWW.SERVICE-MANUAL.NET

116	Thick1:BW:Press:Low Speed	*ENG	[100 to 200 / **120** / 1 deg/step]
117	Special1:FC:Center:Low Speed	*ENG	[120 to 200 / **135** / 1 deg/step]
118	Special1:FC:Press:Low Speed	*ENG	[100 to 200 / **120** / 1 deg/step]
119	Special1:BW:Center:Low Speed	*ENG	[120 to 200 / **130** / 1 deg/step]
120	Special1:BW:Press:Low Speed	*ENG	[100 to 200 / **120** / 1 deg/step]
121	Special2:FC:Center:Low Speed	*ENG	[120 to 200 / **150** / 1 deg/step]
122	Special2:FC:Press:Low Speed	*ENG	[100 to 200 / **120** / 1 deg/step]
123	Special2:BW:Center:Low Speed	*ENG	[120 to 200 / **145** / 1 deg/step]
124	Special2:BW:Press:Low Speed	*ENG	[100 to 200 / **120** / 1 deg/step]
125	Plain1:Glossy:Center	*ENG	[120 to 200 / **140** / 1 deg/step]
126	Plain1:Glossy:Press	*ENG	[100 to 200 / **120** / 1 deg/step]
127	Plain2:Glossy:Center	*ENG	[120 to 200 / **145** / 1 deg/step]
128	Plain2:Glossy:Press	*ENG	[100 to 200 / **120** / 1 deg/step]
129	M-thick:Glossy:Center	*ENG	[120 to 200 / **150** / 1 deg/step]
130	M-thick:Glossy:Press	*ENG	[100 to 200 / **120** / 1 deg/step]
131	OHP:Center	*ENG	[120 to 200 / **150** / 1 deg/step]
132	OHP:Press	*ENG	[100 to 200 / **120** / 1 deg/step]

WWW.SERVICE-MANUAL.NET

133	Envelop:Center:Low Speed	*ENG	[120 to 200 / **170** / 1 deg/step]
134	Envelop:Press:Low Speed	*ENG	[100 to 200 / **120** / 1 deg/step]
135	Thin:FC:Center:Low Speed	*ENG	[120 to 200 / **135** / 1 deg/step]
136	Thin:FC:Press:Low Speed	*ENG	[100 to 200 / **120** / 1 deg/step]
137	Thin:BW:Center:Low Speed	*ENG	[120 to 200 / **130** / 1 deg/step]
138	Thin:BW:Press:Low Speed	*ENG	[100 to 200 / **120** / 1 deg/step]
139	Thick4:FC:Center	*ENG	[120 to 200 / **175** / 1 deg/step]
140	Thick4:FC:Press	*ENG	[100 to 200 / **120** / 1 deg/step]
141	Thick4:BW:Center	*ENG	[120 to 200 / **165** / 1 deg/step]
142	Thick4:BW:Press	*ENG	[100 to 200 / **120** / 1 deg/step]

1106	[Fusing Temp. Display]		
001	Center	-	[-10 to 250 / - / 1 deg/step] Displays the temperature of the heating roller.
002	End	-	
003	Pressure	-	[-10 to 250 / - / 1 deg/step] Displays the temperature of the heating roller.
004	Pressure End	-	

WWW.SERVICE-MANUAL.NET

1107	[Standby Target Temp. Setting]		
001	Standby Heater Off Time	*ENG	[0 to 100 / **15** / 1 sec/step]
	Specifies the time that the fusing heater turns off after the fusing unit temperature has reached its target temperature.		
002	Stanby/Preheat1: Press	*ENG	[0 to 125 / **90** / 1 deg/step]
	Specifies the temperature of the pressure roller for the ready or energy save 1 mode.		
004	Preheat2:Press	*ENG	[0 to 125 / **90** / 1 deg/step]
	Specifies the temperature of the pressure roller for the energy save 2 mode.		
006	Low Power:Press	*ENG	[0 to 125 / **60** / 1 deg/step]
	Specifies the temperature of the pressure roller for the low power mode.		
007	Print Ready:Center	*ENG	[120 to 180 / **C2.5c: 165, C2.5d: 170** / 1 deg/step]
	Specifies the temperature of the heating roller for the print ready condition.		
008	Print Ready:Press	*ENG	[100 to 200 / **120** / 1 deg/step]
	Specifies the temperature of the pressure roller for the print ready condition.		

1108	[After Reload/Job Target Temp.]		
001	Center	*ENG	[120 to 180 / **C2.5c: 165, C2.5d: 170** / 1 deg/step]
	Specifies the temperature of the heating roller after re-load or job.		
002	Press	*ENG	[100 to 200 / **120** / 1 deg/step]
	Specifies the temperature of the pressure roller after re-load or job.		

WWW.SERVICE-MANUAL.NET

1111	[Environment Correction:Fusing]		
001	Temp.: Threshold: Low	*ENG	[0 to 100 / **17** / 1 deg/step]
	Specifies the threshold temperature for low temperature. If the fusing temperature is 17°C or less, the machine executes the fusing mode for low temperature.		
002	Temp.: Threshold: High	*ENG	[0 to 100 / **30** / 1 deg/step]
	Sepcifies the threshold temperature for high temperature. If the fusing temperature is 30°C or more, the machine executes the fusing mode for high temperature.		
003	Low Temp. Correction	*ENG	[0 to 15 / **5** / 1 deg/step]
	Specifies the additional temperature for the target temperature. If the fusing temperature is in low temperature condition, this temperature is added to the taraget temperature.		
004	High Temp. Correction	*ENG	[0 to 15 / **0** / 1 deg/step]
	Specifies the additional temperature for the target temperature. If the fusing temperature is in high temperature condition, this temperature is added to the taraget temperature.		
005	Job Low Temp. Correction	*ENG	[0 to 100 / **5** / 0.1 deg/step]
006	Job High Temp. Correction	*ENG	[0 to 100 / **0** / 0.1 deg/step]
007	Job Low Temp. Correction:Sp.	*ENG	[0 to 100 / **10** / 0.1 deg/step]
008	Job High Temp. Correction:Sp.	*ENG	[0 to 100 / **0** / 0.1 deg/step]

WWW.SERVICE-MANUAL.NET

1113	[Curl Correction]		
001	Execute Pattern	*ENG	[0 to 2 / **0** / 1 /step] 0: Off, 1: On (No Decurl), 2: On
	Selects the curl correction type.		
002	Humidity:Threshold:M-humid	*ENG	[0 to 100 / **1** / 1 %/step]
	Specifies the threshold between low and middle humidity.		
003	Humidity:Threshold:H-humid	*ENG	[0 to 100 / **65** / 1 %/step]
	Specifies the threshold between middle and high humidity.		
004	Permit Temp.:Delta:Press:M-humid	*ENG	[0 to 200 / **40** / 1 deg/step]
	Specifies the threshold temperature for the curl control in middle humidity.		
005	Permit Temp.:Delta:Press:H-humid	*ENG	[0 to 200 / **30** / 1 deg/step]
	Specifies the threshold temperature for the curl control in high humidity.		
006	Permit Temp.:Delta:Press:M-humid:No Decurl	*ENG	[0 to 200 / **30** / 1 deg/step]
	Specifies the threshold temperature for the no curl control in middle humidity.		
007	Permit Temp.:Delta:Press:H-humid:No Decurl	*ENG	[0 to 200 / **20** / 1 deg/step]
	Specifies the threshold temperature for the no curl control in high humidity.		
008	CPM:M-humid	*ENG	[0 to 100 / **80** / 1 %/step]
	Specifies the CPM ratio of the decurl control against to the normal operation in middle humidity.		

WWW.SERVICE-MANUAL.NET

009	CPM:H-humid	*ENG	[0 to 100 / **65** / 1 %/step]
	Specifies the CPM ratio of the decurl control against to the normal operation in high humidity.		
010	CPM:M-humid:No Decurl	*ENG	[0 to 100 / **80** / 1 %/step]
	Specifies the CPM ratio against of the no decurl control to the normal operation in middle humidity.		
011	CPM:H-humid:No Decurl	*ENG	[0 to 100 / **65** / 1 %/step]
	Specifies the CPM ratio against of the no decurl control to the normal operation in high humidity.		

1115	[Target Temp. Correction]		
001	Temp.:Delta:End	*ENG	[-100 to 100 / **0** / 1 deg/step]
	Specifies the different temperature between end and center of the heating roller.		

1124	[CPM Down Setting]		
	Specifies the settings for the CPM down mode.		
001	Low:Down Temp.	*ENG	[-50 to 0 / **-20** / 1 deg/step]
	Specifies the CPM down threshold temperature for the low temperature condition. If the fusing temperature decreases -20°C (adjustable) below the target temperature, the machine enters the CPM down mode.		
002	Low:Up Temp.	*ENG	[-50 to 0 / **-15** / 1 deg/step]
	Specifies the CPM up threshold temperature for the low temperature condition. If the fusing temperature increases -15°C (adjustable) below the target temperature, the machine enters the CPM up mode.		

WWW.SERVICE-MANUAL.NET

003	Low :1st CPM	*ENG	[10 to 100 / **80** / 5 %/step]
	Specifies the 1st CPM down ration against the normal CPM in the low temperature condition.		
004	Low :2nd CPM	*ENG	[10 to 100 / **65** / 5 %/step]
	Specifies the 2nd CPM down ration against the normal CPM in the low temperature condition.		
005	Low :3rd CPM	*ENG	[10 to 100 / **50** / 5 %/step]
	Specifies the 3rd CPM down ration against the normal CPM in the low temperature condition.		
006	High :1st CPM	*ENG	[10 to 100 / **75** / 5 %/step]
	Specifies the 1st CPM down ration against the normal CPM in the high temperature condition.		
007	High:2nd CPM	*ENG	[10 to 100 / **50** / 5 %/step]
	Specifies the 3rd CPM down ration against the normal CPM in the high temperature condition.		
008	High:3rd CPM	*ENG	[10 to 100 / **25** / 5 %/step]
	Specifies the 1st CPM down ration against the normal CPM in the high temperature condition.		
009	High:1st CPM Down Temp.:A3	*ENG	[100 to 250 / **230** / 1 deg/step]
	Specifies the heating roller temperature for 1st CPM down of A3 paper size.		
010	High:2nd CPM Down Temp.:A3	*ENG	[100 to 250 / **233** / 1 deg/step]
	Specifies the heating roller temperature for 2nd CPM down of A3 paper size.		

WWW.SERVICE-MANUAL.NET

011	High:3rd CPM Down Temp.:A3	*ENG	[100 to 250 / **235** / 1 deg/step]
	Specifies the heating roller temperature for 3rd CPM down of A3 paper size.		
012	High:1st CPM Down Temp.:A4	*ENG	[100 to 250 / **180** / 1 deg/step]
	Specifies the heating roller temperature for 1st CPM down of A4 paper size.		
013	High:2nd CPM Down Temp.:A4	*ENG	[100 to 250 / **183** / 1 deg/step]
	Specifies the heating roller temperature for 2nd CPM down of A4 paper size.		
014	High:3rd CPM Down Temp.:A4	*ENG	[100 to 250 / **185** / 1 deg/step]
	Specifies the heating roller temperature for 3rd CPM down of A4 paper size.		
015	High:1st CPM Down Temp.:B5:Press	*ENG	[100 to 250 / **175** / 1 deg/step]
	Specifies the pressure roller temperature for 1st CPM down of B5 paper size.		
016	High:2nd CPM Down Temp.:B5:Press	*ENG	[100 to 250 / **180** / 1 deg/step]
	Specifies the pressure roller temperature for 2nd CPM down of B5 paper size.		
017	High:3rd CPM Down Temp.:B5:Press	*ENG	[100 to 250 / **185** / 1 deg/step]
	Specifies the pressure roller temperature for 3rd CPM down of B5 paper size.		
018	High:1st CPM Down Temp.:A5:Press	*ENG	[100 to 250 / **180** / 1 deg/step]
	Specifies the pressure roller temperature for 1st CPM down of A5 paper size.		

WWW.SERVICE-MANUAL.NET

019	High:2nd CPM Down Temp.:A5:Press	*ENG	[100 to 250 / **185** / 1 deg/step]
	Specifies the pressure roller temperature for 2nd CPM down of A5 paper size.		
020	High:3rd CPM Down Temp.:A5:Press	*ENG	[100 to 250 / **190** / 1 deg/step]
	Specifies the pressure roller temperature for 3rd CPM down of A5 paper size.		
021	High:1st CPM Down Temp.:A6:Press	*ENG	[100 to 250 / **160** / 1 deg/step]
	Specifies the pressure roller temperature for 1st CPM down of A6 paper size.		
022	High:2nd CPM Down Temp.:A6:Press	*ENG	[100 to 250 / **165** / 1 deg/step]
	Specifies the pressure roller temperature for 2nd CPM down of A6 paper size.		
023	High:3rd CPM Down Temp.:A6:Press	*ENG	[100 to 250 / **170** / 1 deg/step]
	Specifies the pressure roller temperature for 3rd CPM down of A6 paper size.		
024	Judging Interval	*ENG	[0 to 250 / **5** / 1 sec/step]
	Specifies the interval for CPM down judgement.		

WWW.SERVICE-MANUAL.NET

1141	[Fusing SC Issue Time Info]		
001	SC Number	*ENG	Displays the issued SC number.
002	SC Cause	*ENG	[0 to 9 / **-** / 1/step]
101	Htg Roller:Ctr Diff1	*ENG	[0 to 260 / - / 1 deg/step] Displays the temperature at the center of the heating roller when an SC was issued.
102	Htg Rolloer:Ctr Det1	*ENG	
103	Htg Roller:Ctr Corr1	*ENG	
104	Htg Roller:End Diff1	*ENG	[0 to 260 / - / 1 deg/step] Displays the temperature at the end of the heating roller when an SC was issued.
105	Htg Roller:End Det1	*ENG	
106	Htg Roller:End Corr1	*ENG	
107	Press Roller Temp Value1	*ENG	[0 to 260 / - / 1 deg/step] Displays the temperature at the pressure roller when an SC was issued.
151	Htg Roller:Ctr Diff2	*ENG	[0 to 260 / - / 1 deg/step]
152	Htg Rolloer:Ctr Det2	*ENG	
153	Htg Roller:Ctr Corr2	*ENG	
154	Htg Roller:End Diff2	*ENG	[0 to 260 / - / 1 deg/step]
155	Htg Roller:End Det2	*ENG	
156	Htg Roller:End Corr2	*ENG	
157	Press Roller Temp Value2	*ENG	[0 to 260 / - / 1 deg/step]
201	Htg Roller:Ctr Diff3	*ENG	[0 to 260 / - / 1 deg/step]
202	Htg Rolloer:Ctr Det3	*ENG	
203	Htg Roller:Ctr Corr3	*ENG	
204	Htg Roller:End Diff3	*ENG	[0 to 260 / - / 1 deg/step]

WWW.SERVICE-MANUAL.NET

205	Htg Roller:End Det3	*ENG	
206	Htg Roller:End Corr3	*ENG	
207	Press Roller Temp Value3	*ENG	[0 to 260 / - / 1 deg/step]

1142	[Fusing Jam Detection]		
001	SC Display	*ENG	[0 or 1 / **0** / -] 0: ON, 1: OFF
	Enables or disables the fusing consecutive jam (three times) SC detection.		

1151	[Pressure Setting]		
001	Pressure Change ON/OFF	*ENG	[0 or 1 / **1** / -]
	Enables or disables the pressure switching control for the fusing unit. 0: OFF , 1: ON		
002	Pressure Position1	*ENG	[0 to 10,000 / **490** / 10 msec/step]
	Specifies the rotation time of the pressure roller contact motor for the pressure position 1.		
003	Pressure Position2	*ENG	[0 to 10,000 / **660** / 10 msec/step]
	Specifies the rotation time of the pressure roller contact motor for the pressure position 2.		
004	Pressure Position3	*ENG	[0 to 10,000 / **2130** / 10 msec/step]
	Specifies the rotation time of the pressure roller contact motor for the pressure position 3.		

WWW.SERVICE-MANUAL.NET

005	Depressure Position	*ENG	[0 to 10,000 / **220** / 10 msec/step]
	Specifies the rotation time of the pressure roller contact motor for the depression position (no pressure).		
010	Shift Time	*ENG	[0 to 3600 / **5** / 1 sec/step]
	Specifies the timing for depressing the fusing unit. If the machine does not get any jobs for specified time by this SP after copying or printing, the machine depresses the fusing unit.		
101	Pressure:Plain1/2	*ENG	[0 to 3 / **3** / 1 /step]
	Sets the default pressure position of the fusing unit for each paper type in normal speed. 0: Depression position (no pressure) 1: Position 1 (less pressure) 2: Position 2 3: Position 3 (strongest pressure)		
102	Pressure:Thin	*ENG	[0 to 3 / **3** / 1 /step]
103	Pressure:M-thick	*ENG	[0 to 3 / **3** / 1 /step]
104	Pressure:Thick1	*ENG	[0 to 3 / **3** / 1 /step]
105	Pressure:Thick2	*ENG	[0 to 3 / **2** / 1 /step]
106	Pressure:Thick3	*ENG	[0 to 3 / **2** / 1 /step]
107	Pressure:Special1	*ENG	[0 to 3 / **3** / 1 /step]
108	Pressure:Special2	*ENG	[0 to 3 / **3** / 1 /step]
109	Pressure:Special3	*ENG	[0 to 3 / **2** / 1 /step]
110	Pressure:Envelope	*ENG	[0 to 3 / **1** / 1 /step]

WWW.SERVICE-MANUAL.NET

151	Pressure:Plain1/2:Low Speed	*ENG	[0 to 3 / **3** / 1 /step]
	Sets the default pressure position of the fusing unit for each paper type in low speed. 0: Depression position (no pressure) 1: Position 1 (less pressure) 2: Position 2 3: Position 3 (strongest pressure)		
152	Pressure:M-thick:Low Speed	*ENG	[0 to 3 / **3** / 1 /step]
153	Pressure:Thick1:Low Speed	*ENG	[0 to 3 / **3** / 1 /step]
154	Pressure:Special1:Low Speed	*ENG	[0 to 3 / **3** / 1 /step]
155	Pressure:Special2:Low Speed	*ENG	[0 to 3 / **3** / 1 /step]
156	Pressure:Plain1/2:Glossy	*ENG	[0 to 3 / **3** / 1 /step]
157	Pressure:M-thick:Glossy	*ENG	[0 to 3 / **3** / 1 /step]
158	Pressure:OHP	*ENG	[0 to 3 / **3** / 1 /step]
159	Pressure:Envelope:Low Speed	*ENG	[0 to 3 / **1** / 1 /step]
160	Pressure:Thin:Low Speed	*ENG	[0 to 3 / **3** / 1 /step]
161	Pressure:Thick4	*ENG	[0 to 3 / **2** / 1 /step]
	Sets the default pressure position of the fusing unit for thick 4 paper. 0: Depression position (no pressure) 1: Position 1 (less pressure) 2: Position 2 3: Position 3 (strongest pressure)		
201	Filler Edge Detection Counter	ENG	[0 to 9,000,000 / - / 1 /step]
	Displays the detection time for the edge of the pressure roller actuator.		

WWW.SERVICE-MANUAL.NET

1152	[Fusing Nip Band Check]		
001	Execute	-	-
	Executes the nip band measurement between heating roller and pressure roller. If the nip band width is not 8 mm, and fusing is not good, replace the pressure roller or install a new fusing unit.		
002	Pre-Idling Time	*ENG	[0 to 255 / **240** / 1 sec/step]
	Specifies the fusing rotation time before executing SP1109-001.		
003	Stop Time	* ENG	[5 to 30 / **20** / 1 sec/step]
	Specifies the time for measuring the nip.		
004	Pressure Position	* ENG	[1 to 3 / **3** / 1]
	Specifies the pressure position for measuring the nip.		

1153	[Fuser Cleaning]		
001	Compulsion execution	-	Execute the fusing cleaning mode.
002	Operation interval	*ENG	[1 to 300 / **0** / 1 K/step]
	Adjusts the execution interval for the fusing cleaning mode. 1K= 100 sheets		
003	Control Temp.	*ENG	[0 to 200 / **180** / 1°C/step]
	Specifies the heating roller temperature for the fusing cleaning mode.		
004	Page Count	*ENG	[1 to 300000 / **-** / 1 page/step]
	Displays the page counter for the fusing cleaning mode.		

System Maintenance

WWW.SERVICE-MANUAL.NET

1801	[Motor Speed Adj.] FA		
001	Registration:Plain:Low	*ENG	[–2 to 2 / **–1.1** / 0.1 %/step]
002	Registration:Plain:High	*ENG	[–2 to 2 / **–0.1** / 0.1 %/step]
003	Registration:Middle Thick:Low	*ENG	[–2 to 2 / **–1.1** / 0.1 %/step]
004	Registration:Middle Thick:Mid	*ENG	[–2 to 2 / **–0.1** / 0.1 %/step]
005	Registration:Middle Thick:High	*ENG	
006	Registration:Thick 1:Low	*ENG	[–2 to 2 / **–1.1** / 0.1 %/step]
007	Registration:Thick1:Mid	*ENG	[–2 to 2 / **–0.1** / 0.1 %/step]
008	Registration:Thick 2:Low	*ENG	[–2 to 2 / **–1.1** / 0.1 %/step]
009	Registration:Thick 3:Low	*ENG	
010	Duplex CW:Plane:Low	*ENG	[–4 to 4 / **0.0** / 0.1 %/step]
011	Duplex CW:Normal:High	*ENG	
012	Duplex CW:Middle Thick:Low	*ENG	
013	Duplex CW:Middle Thick:Mid	*ENG	
014	Duplex CW:Middle Thick:High	*ENG	
015	Duplex CW:Thick1:Low	*ENG	
016	Duplex CW:Thick1:Mid	*ENG	
017	Duplex CW:Thick2:Low	*ENG	
018	Duplex CW:Thick3:Low	*ENG	
019	Duplex CCW:Normal:High	*ENG	[–4 to 4 / **0.0** / 0.1 %/step]
020	Duplex CCW:Middle Thick:Mid	*ENG	
021	Duplex CCW:Middle Thick:high	*ENG	
023	Duplex CCW:Thick1:Mid	*ENG	
024	Reverse CW:Normal:High	*ENG	[–4 to 4 / **–0.5** / 0.1%/step]

WWW.SERVICE-MANUAL.NET

025	Reverse CW:Middle Thick:Mid	*ENG	[–4 to 4 / **0** / 0.1 %/step]
026	Reverse CW:Middle Thick:High	*ENG	[–4 to 4 / **–0.5** / 0.1%/step]
028	Reverse CW:Thick1:Mid	*ENG	[–4 to 4 / **0** / 0.1 %/step]
029	Reverse CCW:Normal:High	*ENG	
030	Reverse CCW:Middle Thick:Mid	*ENG	
031	Reverse CCW:Middle Thick:High	*ENG	
033	Reverse CCW:Thick1:Mid	*ENG	
034	Feed:Plain:Low	*ENG	[–2 to 2 / –**1.1** / 0.1 %/step]
035	Feed:Plain:High	*ENG	[–2 to 2 / –**0.1** / 0.1 %/step]
036	Feed:Middle thick:Low	*ENG	[–2 to 2 / –**1.1** / 0.1 %/step]
037	Feed:Middle thick:Mid	*ENG	[–2 to 2 / –**0.1** / 0.1 %/step]
038	Feed:Middle thick:High	*ENG	
039	Feed:Thick 1:Low	*ENG	[–2 to 2 / –**1.1** / 0.1 %/step]
040	Feed:Thick 1:Mid	*ENG	[–2 to 2 / –**0.1** / 0.1 %/step]
041	Feed:Thick 2:Low	*ENG	[–2 to 2 / –**1.1** / 0.1 %/step]
042	Feed:Thick 3:Low	*ENG	
043	Bridge Motor:Low	*ENG	[–4 to 4 / **0** / 0.1 %/step]
044	Bridge Motor:Mid	*ENG	
045	Bridge Motor:High	*ENG	
060	KOpcDevMot:High	*ENG	[–4 to 4 / –**0.6** / 0.01 %/step]
061	KOpcDevMot:Mid	*ENG	
062	KOpcDevMot:Low	*ENG	

WWW.SERVICE-MANUAL.NET

063	MOpcDevMot:High	*ENG	[–10 to 10 / **0** / 1 step/step]
064	MOpcDevMot:Mid	*ENG	[–9 to 9 / **0** / 1 step/step]
065	MOpcDevMot:Low	*ENG	[–14 to 14 / **0** / 1 step/step]
066	COpcDevMot:High	*ENG	[–10 to 10 / **0** / 1 step/step]
067	COpcDevMot:Mid	*ENG	[–9 to 9 / **0** / 1 step/step]
068	COpcDevMot:Low	*ENG	[–14 to 14 / **0** / 1 step/step]
069	YOpcDevMot:High	*ENG	[–10 to 10 / **0** / 1 step/step]
070	YOpcDevMot:Mid	*ENG	[–9 to 9 / **0** / 1 step/step]
071	YOpcDevMot:Low	*ENG	[–14 to 14 / **0** / 1 step/step]
072	Fusing: High	*ENG	[–4 to 4 / **1.9** / 0.01 %/step]
073	Fusing: Mid	*ENG	[–4 to 4 / **1.4** / 0.01 %/step]
074	Fusing: Low	*ENG	[–4 to 4 / **1.7** / 0.01 %/step]
075	TransferMot:High	*ENG	[–4 to 4 / –**0.2** / 0.01 %/step]
076	TransferMot:Mid	*ENG	
077	TransferMot:Low	*ENG	
078	TonerMot	*ENG	[–30 to 30 / **10** / 5 %/step]
079	Fusing Exit Motor: 1200	*ENG	[–4 to 4 / **2.1** / 0.01 %/step]
100	Drum Adjust	*ENG	[0 or 1 / **1** / 1] 0: Off, 1: On
	Enables or disables the drum amplitude adjustment.		
101	MOpcDevMot:High	*ENG	[–10 to 10 / **C2.5c: 0** / 1 step/step] [–8 to 8 / **C2.5d: 0** / 1 step/step]
102	COpcDevMot:High	*ENG	

WWW.SERVICE-MANUAL.NET

103	YOpcDevMot:High	*ENG	
104	MOpcDevMot:Mid	*ENG	[–7 to 7 / **0** / 1 step/step]
105	COpcDevMot:Mid	*ENG	
106	YOpcDevMot:Mid	*ENG	
107	MOpcDevMot:Low	*ENG	[–14 to 14 / **0** / 1 step/step]
108	COpcDevMot:Low	*ENG	
109	YOpcDevMot:Low	*ENG	
110	MOpcDevMot:1200	*ENG	[– 7 to 7 / **0** / 1 step/step]
111	COpcDevMot:1200	*ENG	
112	YOpcDevMot:1200	*ENG	
120	Long:Registration:Plain:High	*ENG	[–2 to 2 / **-0.1** / 0.1 %/step]
121	Long:Registration:Plain:Low	*ENG	[–2 to 2 / **-1.1** / 0.1 %/step]
122	Long:Registration:Middle Thick:High	*ENG	[–2 to 2 / **-0.1** / 0.1 %/step]
123	Long:Registration:Middle Thick:Middle	*ENG	
124	Long:Registration:Middle Thick:Low	*ENG	[–2 to 2 / **-1.1** / 0.1 %/step]
125	Long:Registration:Thick 1:Middle	*ENG	[–2 to 2 / **-1** / 0.1 %/step]
126	Long:Registration:Thick 1:Low	*ENG	[–2 to 2 / **-1.1** / 0.1 %/step]
127	Long:Registration:Thick 2:Low	*ENG	[–2 to 2 / **-1.1** / 0.1 %/step]
128	Long:Registration:Thick 3:Low	*ENG	[–2 to 2 / **-1.1** / 0.1 %/step]

WWW.SERVICE-MANUAL.NET

129	Long:Fusing:Plain:High	*ENG	[–4 to 4 / **1.9** / 0.01 %/step]
130	Long:Fusing:Plain:Low	*ENG	[–4 to 4 / **2.1** / 0.01 %/step]
131	Long:Fusing:Middle Thick:High	*ENG	[–4 to 4 / **1.9** / 0.01 %/step]
132	Long:Fusing:Middle Thick:Middle	*ENG	[–4 to 4 / **1.4** / 0.01 %/step]
133	Long:Fusing:Middle Thick:Low	*ENG	[–4 to 4 / **2.1** / 0.01 %/step]
134	Long:Fusing:Thick 1:Middle	*ENG	[–4 to 4 / **2.0** / 0.01 %/step]
135	Long:Fusing:Thick 1:Low	*ENG	[–4 to 4 / **1.7** / 0.01 %/step]
136	Long:Fusing:Thick 2:Low	*ENG	[–4 to 4 / **1.7** / 0.01 %/step]
137	Long:Fusing:Thick 3:Low	*ENG	[–4 to 4 / **1.7** / 0.01 %/step]

1902	[Amplitude Control]		
001	Execute	-	Execute the drum phase adjustment.
002	Result	*ENG	[0 to 3 / **0** / 1] Displays the result of the drum phase adjustment. 0: Successfully done 2: Sampling failure 3: Insufficient detection number
003	Auto Execution	*ENG	[0 or 1 / **1** / -] Turns the automatic drum phase adjustment on or off. 0: Off, 1: On

WWW.SERVICE-MANUAL.NET

1950	[Fan Cooling Time Set]		
	Adjust the rotation time for each fan motor after a job end.		
002	Fusing Exit Fan	*ENG	[0 to 120 / **0** / 0.1 min./step]
006	Main Suction Fan	*ENG	
007	Paper Exit Fan	*ENG	
008	PSU Fan	*ENG	
009	Fusing IH Coil Fan	*ENG	
010	IH Power Supply Fan	*ENG	
011	Second Duct Fan	*ENG	
012	Third Duct Fan	*ENG	

1951	[Fan Start Time Set]		
	Adjust the start time for each fan motor after a job end.		
002	Fusing Exit Fan	*ENG	[0 to 900 / **0** / 1 sec/step]
006	Main Suction Fan	*ENG	[0 to 900 / **120** / 1 sec/step]
007	Paper Exit Fan	*ENG	[0 to 900 / **0** / 1 sec/step]
008	PSU Fan	*ENG	[0 to 900 / **120** / 1 sec/step]
009	Fusing IH Coil Fan	*ENG	[0 to 900 / **0** / 1 sec/step]
010	IH Power Supply Fan	*ENG	
011	Second Duct Fan	*ENG	
012	Third Duct Fan	*ENG	

WWW.SERVICE-MANUAL.NET

1952	[Fan Control Off Mode Time Set]		
	Specifies the time for fan control off mode.		
001	-	*ENG	[0 to 60 / **10** / 1 min./step]

1953	[Extra Fan Control]		
	Configures the settings of extra fan control.		
001	Extra Fan Cooling State	*ENG	[0 or 1 / **0** / 1 /step] 0: Off, 1: On
	Displays the extra fan cooling is On or Off.		
002	Extra Fan Cooling: Time: Threshold	*ENG	[0 to 180 / **C2.5c: 80, C2.5d: 65** / 1 min./step]
003	Extra Fan Cooling: Rotat: Threshold	*ENG	[0 to 999999999 / **0** / 1 min./step]
004	Extra Fan Cooling: Start Date	*ENG	Displays the execution time and date of the extra fan cooling.
005	Extra Fan Cooling Time	*ENG	[0 to 120 / **30** / 0.1 min./step:
	Specifies the execution time for the extra fan cooling.		

WWW.SERVICE-MANUAL.NET

1954	[Extra Fan Control]		
	Configures the settings of extra fan control.		
002	Fan Cooling Time:Fusing Exit Fan:Initial	*ENG	[0 to 120 / **0** / 0.1 min./step]
006	Fan Cooling Time:Main Suction Fan:Initial	*ENG	[0 to 120 / **0** / 0.1 min./step]
007	Fan Cooling Time:Paper Exit Fan:Initial	*ENG	[0 to 120 / **0** / 0.1 min./step]
008	Fan Cooling Time:PSU Fan:Initial	*ENG	[0 to 120 / **0** / 0.1 min./step]
009	Fan Cooling Time:Fusing IH Coil Fan:Initial	*ENG	[0 to 120 / **0** / 0.1 min./step]
010	Fan Cooling Time:IH Power Supply Fan:Initial	*ENG	[0 to 120 / **0** / 0.1 min./step]
011	Fan Cooling Time:Second Duct Fan:Initial	*ENG	[0 to 120 / **0** / 0.1 min./step]
012	Fan Cooling Time:Third Duct Fan:Initial	*ENG	[0 to 120 / **0** / 0.1 min./step]

WWW.SERVICE-MANUAL.NET

5.3 MAIN SP TABLES-2

5.3.1 SP2-XXX (DRUM)

2005	[Charge DC Voltage] Charge Roller DC Voltage Adjustment (Paper Type, Process Speed, Color) Paper Type –> Plain, Thick 1, Thick 2 Plain: High speed, Thick 1: Middle speed, Thick 2&FINE: Low speed		
	Adjusts the DC component of the charge roller bias in the various print modes. Charge bias (DC component) is automatically adjusted during process control; therefore, adjusting these settings does not effect while process control mode (SP3-041-1 Default: ON) is activated. When deactivating process control mode with SP3-041-1, the values in these SP modes are used for printing.		
001	Plain: Bk	*ENG	[0 to 1000 / **690** / 10 –V/step]
002	Plain: M	*ENG	
003	Plain: C	*ENG	
004	Plain: Y	*ENG	
005	Thick 1: Bk	*ENG	
006	Thick 1: M	*ENG	
007	Thick 1: C	*ENG	
008	Thick 1: Y	*ENG	
009	Thick 2&FINE: Bk	*ENG	
010	Thick 2&FINE: M	*ENG	
011	Thick 2&FINE: C	*ENG	

WWW.SERVICE-MANUAL.NET

012	Thick 2&FINE: Y	*ENG	
	[Charge DC: Correction]		
013	PCU:Plain	*ENG	[–100 to 100 / **C2.5c: –26, C2.5d: –28** / 1 –V/step]
014	PCU:Thick 1	*ENG	[–100 to 100 / **-29** / 1 –V/step]
015	PCU:Thick 2&FINE	*ENG	[–100 to 100 / **-28** / 1 –V/step]
016	HVP:Plain	*ENG	[–100 to 100 / **C2.5c: 25, C2.5d: 24** / 1 –V/step]
017	HVP:Thick 1	*ENG	[–100 to 100 / **20** / 1 –V/step]
018	HVP: Thick 2&FINE	*ENG	[–100 to 100 / **29** / 1 –V/step]

2006	[Charge AC Voltage] Charge Roller AC Voltage Adjustment (Paper Type, Process Speed, Color) Paper Type –> Plain, Thick 1, Thick 2 Plain: High speed, Thick 1: Middle speed, Thick 2&FINE: Low speed		
	Adjusts the AC component of the charge roller bias in the various print modes. Charge bias (AC component) is adjusted by environment correction (SP2-007-xxx to SP2-011-xxx). These SPs are activated only when SP2-012-1 is set to "1: manual control".		
001	Plain: Bk	*ENG	[0 to 3 / **1.9** / 0.01 KV/step]
002	Plain: M	*ENG	[0 to 3 / **2.2** / 0.01 KV/step]
003	Plain: C	*ENG	[0 to 3 / **2.2** / 0.01 KV/step]
004	Plain: Y	*ENG	[0 to 3 / **2.2** / 0.01 KV/step]
005	Thick 1: Bk	*ENG	[0 to 3 / **1.9** / 0.01 KV/step]

WWW.SERVICE-MANUAL.NET

006	Thick 1: M	*ENG	[0 to 3 / **2.2** / 0.01 KV/step]
007	Thick 1: C	*ENG	[0 to 3 / **2.2** / 0.01 KV/step]
008	Thick 1: Y	*ENG	[0 to 3 / **2.2** / 0.01 KV/step]
009	Thick 2&FINE: Bk	*ENG	[0 to 3 / **1.9** / 0.01 KV/step]
010	Thick 2&FINE: M	*ENG	[0 to 3 / **2.2** / 0.01 KV/step]
011	Thick 2&FINE: C	*ENG	[0 to 3 / **2.2** / 0.01 KV/step]
012	Thick 2&FINE: Y	*ENG	[0 to 3 / **2.2** / 0.01 KV/step]

2012	[Charge Output Control]		
001	AC Voltage	*ENG	Selects the AC voltage control type. [0 or 1 / **0** / 1 /step] 0: Process control 1: Manual control (AC voltages are decided with SP2006.)

WWW.SERVICE-MANUAL.NET

2013	[Environmental Correction: PCU]		
001	Current Environmental: Display	*ENG	Displays the environmental condition, which is measured in absolute humidity. [1 to 5 / **–** / 1 /step] 1: LL (LL <= 4.3 g/m^3) 2: ML (4.3 < ML <= 11.3 g/m^3) 3: MM (11.3 < MM <= 18.0 g/m^3) 4: MH (18.0 < MH <= 24.0 g/m^3) 5: HH (24.0 g/m^3 < HH)
002	Forced Setting	*ENG	Selects the environmental condition manually. [0 to 5 / **0** / 1 /step] 0: The environmental condition is determined automatically. 1: LL, 2: ML, 3: MM, 4: MH, 5: HH
003	Absolute Humidity: Threshold 1	*ENG	Changes the humidity threshold between LL and ML. [0 to 100 / **3.0** / 0.01 g/m^3/step]
004	Absolute Humidity: Threshold 2	*ENG	Changes the humidity threshold between ML and MM. [0 to 100 / **8.0** / 0.01 g/m^3/step]
005	Absolute Humidity: Threshold 3	*ENG	Changes the humidity threshold between MM and MH. [0 to 100 / **15.0** / 0.01 g/m^3/step]
006	Absolute Humidity: Threshold 4	*ENG	Changes the humidity threshold between MH and HH. [0 to 100 / **15.0** / 0.01 g/m^3/step]

WWW.SERVICE-MANUAL.NET

007	Current Temp.: Display	*ENG	Displays the current temperature. [0 to 100 / **0** / 1 deg/step]
008	Current Relative Humidity: Display	*ENG	Displays the current relative humidity. [0 to 100 / **0** / 1%RH/step]
009	Current Absolute Humidity: Display	*ENG	Displays the absolute humidity. [0 to 100 / **0** / 0.01 g/m^3/step]
010	Previous Environmental: Display	*ENG	Displays the previous environmental condition, which is measured in absolute humidity. [1 to 5 / **–** / 1 /step] 1: LL, 2: ML, 3: MM, 4: MH, 5: HH
011	Previous Temp.: Display	*ENG	Displays the previous temperature. [0 to 100 / **0** / 1 deg/step]
012	Previous Relative Humidity: Display	*ENG	Displays the previous relative humidity. [0 to 100 / **0** / 1%RH/step]
013	Previous Absolute Humidity: Display	*ENG	Displays the previous absolute humidity. [0 to 100 / **0** / 0.01 g/m^3/step]

2015	[Charge AC Adj: Result]		
001	Bk	*ENG	[0 to 9 / **0** / 1 /step] 0: Success 1: Out of tolerance range 2: Out of adjustable range 3: Adjustment incompleted
002	M	*ENG	
003	C	*ENG	
004	Y	*ENG	

WWW.SERVICE-MANUAL.NET

2101	[Color Registration Correction] **FA**		
	These values are the parameters for the automatic line position adjustment and are adjusted at the factory. However, you must input a value for SP2101-001 after replacing the laser optics housing unit. For details, see "Laser Optics Housing Unit" in the "Replacement and Adjustment" section. The value should be provided with the new laser optics housing unit.		
001	Main Dot: Bk	*ENG	[–512 to 511 / **0** / 1 dot/step]
002	Main Dot: Ma	*ENG	
003	Main Dot: Cy	*ENG	
004	Main Dot: Ye	*ENG	
005	Sub Line: Bk	*ENG	[–16384 to 16383 / **0** / 1 line/step]
006	Sub Line: Ma	*ENG	
007	Sub Line: Cy	*ENG	
008	Sub Line: Ye	*ENG	

2103	[Erase Margin Adjustment] (Area, Paper Size)		
	Adjusts the erase margin by deleting image data at the margins.		
001	Lead Edge Width	*ENG	[0 to 9.9 / **4.2** / 0.1 mm/step]
002	Trail. Edge Width	*ENG	
003	Left	*ENG	[0 to 9.9 / **2** / 0.1 mm/step]
004	Right	*ENG	
006	Duplex Trail. L Size	*ENG	[0 to 4 / **1** / 0.1 mm/step]
007	Duplex Trail. M Size	*ENG	[0 to 4 / **0.8** / 0.1 mm/step]

System Maintenance

WWW.SERVICE-MANUAL.NET

008	Duplex Trail. S Size	*ENG	[0 to 4 / **0.6** / 0.1 mm/step]
009	Duplex Left Edge	*ENG	[0 to 1.5 / **0.3** / 0.1 mm/step]
010	Duplex Right Edge	*ENG	
011	Duplex Trail. L Size:Thick	*ENG	[0 to 4 / **1** / 0.1 mm/step]
012	Duplex Trail. M Size:Thick	*ENG	[0 to 4 / **0.8** / 0.1 mm/step]
013	Duplex Trail. S Size:Thick	*ENG	[0 to 4 / **0.6** / 0.1 mm/step]
014	Duplex Left Edge:Thick	*ENG	[0 to 1.5 / **0.3** / 0.1 mm/step]
015	Duplex Right Edge:Thick	*ENG	

2105	[LD Power Adj.] (Process Speed, Color)		
	Adjusts the LD power of each color for each process speed. Each LD power setting is decided by process control.		
001	High Speed: Bk	*ENG	[50 to 120 / **100** / 1%/step] Decreasing a value makes lines thinner on the output. Increasing a value makes lines thicker on the output.
002	High Speed: Ma	*ENG	
003	High Speed: Cy	*ENG	
004	High Speed: Ye	*ENG	
005	Middle Speed: Bk	*ENG	[50 to 120 / **100** / 1%/step] Decreasing a value makes lines thinner on the output. Increasing a value makes lines thicker on the output.
006	Middle Speed: Ma	*ENG	
007	Middle Speed: Cy	*ENG	
008	Middle Speed: Ye	*ENG	
009	Low Speed: Bk	*ENG	[50 to 120 / **100** / 1%/step] Decreasing a value makes lines thinner on the output. Increasing a value makes lines thicker on the output.
010	Low Speed: Ma	*ENG	
011	Low Speed: Cy	*ENG	
012	Low Speed: Ye	*ENG	

WWW.SERVICE-MANUAL.NET

2109	[Test Pattern]		
	Generates the test pattern using "COPY Window" tab in the LCD.		
003	Pattern Selection	-	[0 to 23 / **0** / 1/step]
	0 None 1: Vertical Line (1dot) 2: Vertical Line (2dot) 3: Horizontal (1dot) 4: Horizontal (2dot) 5: Grid Vertical Line 6: Grid Horizontal Line 7: Grid pattern Small 8: Grid pattern Large 9: Argyle Pattern Small 10: Argyle Pattern Large		11. Independent Pattern (1dot) 12. Independent Pattern (2dot) 13. Independent Pattern (4dot) 14. Trimming Area 16: Hound's Tooth Check (Horizontal) 17: Band (Horizontal) 18: Band (Vertical) 19: Checker Flag Pattern 20: Grayscale Vertical Margin 21: Grayscale Horizontal Margin 23: Full Dot Pattern
005	Color Selection	-	Specifies the color for the test pattern. [1 to 4 / **1** / 1/step] 1: All colors, 2: Magenta, 3: Yellow, 4: Cyan
006	Density: Bk	-	Specifies the color density for the test pattern. [0 to 15 / **15** / 1 /step] 0: Lightest density 15: Darkest density
007	Density: Ma	-	
008	Density: Cy	-	
009	Density: Ye	-	

System Maintenance

WWW.SERVICE-MANUAL.NET

2111	[Forced Line Position Adj.]		
001	Mode a	-	Executes the fine line position adjustment twice. If this SP is not completed (NG is displayed), do SP2111-003 first and then try this SP again.
002	Mode b	-	Executes the fine line position adjustment once. If this SP is not completed, do SP2111-003 first and then try this SP again.
003	Mode c	-	Executes the rough line position adjustment once. After doing this SP, make sure to execute SP2111-001 or -002. Otherwise, the line position adjustment is not perfectly done.

2112	[TM/ID Sensor Check] ID Sensor Check **FA**		
001	Execute		[0 or 1 / **0** / 1 /step] This SP is used to check the ID sensors at the factory. The results of this SP are displayed in SP2140 to SP2145.

WWW.SERVICE-MANUAL.NET

2117	[Skew Adjustment]		
	Specifies a skew adjustment value for the skew motor M, C or Y. These SPs must be used when a new laser optics housing unit is installed or when SC2.585 occurs. For details, see "Laser Optics Housing Unit" in the "Replacement and Adjustment" section.		
001	Pulse: M	*ENG	[–50 to 50 / **0** / 1 pulse/step]
002	Pulse: C	*ENG	
003	Pulse: Y	*ENG	

2118	[Skew Adjustment]		
001	Execute: M	*ENG	Changes the current skew adjustment values to the values specified with SP2117. These SPs must be used when a new laser optics housing unit is installed or when SC2.585 occurs. For details, see "Laser Optics Housing Unit" in the "Replacement and Adjustment" section.
002	Execute: C	*ENG	
003	Execute: Y	*ENG	

2119	[Skew Adjustment Display]		
	Displays the current skew adjustment value for each skew motor.		
001	M	*ENG	[–50 to 50 / **0** / 1 pulse/step]
002	C	*ENG	
003	Y	*ENG	

System Maintenance

WWW.SERVICE-MANUAL.NET

2150	[Area Mag. Correction] LD Pulse Area Correction (Color, Area) **FA**		
	Adjusts the magnification for each area. The main scan (297 mm) is divided into 8 areas. Area 1 is at the front side of the machine (left side of the image) and area 8 is at the rear side of the machine (right side of the image). Decreasing a value makes the image shift to the left side on the print. Increasing a value makes the image shift to the right side on the print. 1 pulse = 1/16 dot		
027	Area 0: Bk	*ENG	[-256 to 255 / **0** / 1sub-dot/step]
028	Area 1: Bk	*ENG	Adjusts the area magnification for LD 0. [–256 to 255 / **0** / 1 sub-dot/step]
029	Area 2: Bk	*ENG	
030	Area 3: Bk	*ENG	
031	Area 4: Bk	*ENG	
032	Area 5: Bk	*ENG	
033	Area 6: Bk	*ENG	
034	Area 7: Bk	*ENG	
035	Area 8: Bk	*ENG	
036	Area 9: Bk	*ENG	Not used
037	Area 10: Bk	*ENG	
038	Area 11: Bk	*ENG	
039	Area 12: Bk	*ENG	
079	Area 0: Ma	*ENG	Not used
080	Area 1: Ma	*ENG	Adjusts the area magnification for LD 0. [–255to 255 / **0** / 1 sub-dot/step]

WWW.SERVICE-MANUAL.NET

081	Area 2: Ma	*ENG	[–256to 255 / **0** / 1 sub-dot/step]
082	Area 3: Ma	*ENG	
083	Area 4: Ma	*ENG	
084	Area 5: Ma	*ENG	
085	Area 6: Ma	*ENG	
086	Area 7: Ma	*ENG	
087	Area 8: Ma	*ENG	
088	Area 9: Ma	*ENG	Not used
089	Area 10: Ma	*ENG	
090	Area 11: Ma	*ENG	
091	Area 12: Ma	*ENG	
131	Area 0: Cy	*ENG	Not used
132	Area 1: Cy	*ENG	Adjusts the area magnification for LD 0. [–256 to 255 / **0** / 1 sub-dot/step]
133	Area 2: Cy	*ENG	
134	Area 3: Cy	*ENG	
135	Area 4: Cy	*ENG	
136	Area 5: Cy	*ENG	
137	Area 6: Cy	*ENG	
138	Area 7: Cy	*ENG	
139	Area 8: Cy	*ENG	

WWW.SERVICE-MANUAL.NET

140	Area 9: Cy	*ENG	Not used
141	Area 10: Cy	*ENG	
142	Area 11: Cy	*ENG	
143	Area 12: Cy	*ENG	
183	Area 0: Ye	*ENG	Not used
184	Area 1: Ye	*ENG	Adjusts the area magnification for LD 0. [–256 to 255 / **0** / 1 sub-dot/step]
185	Area 2: Ye	*ENG	
186	Area 3: Ye	*ENG	
187	Area 4: Ye	*ENG	
188	Area 5: Ye	*ENG	
189	Area 6: Ye	*ENG	
190	Area 7: Ye	*ENG	
191	Area 8: Ye	*ENG	
192	Area 9: Ye	*ENG	Not used
193	Area 10: Ye	*ENG	
194	Area 11: Ye	*ENG	
195	Area 12: Ye	*ENG	

WWW.SERVICE-MANUAL.NET

2152	[Area Shad. Correct. Setting] **FA**		
	Adjusts the area correction value for each LD power. The main scan is divided into 16 areas. However, the image areas are limited from area 1 to area 14. For BK and Magenta, area 1 is at the rear side of the machine (left side of the image) and area 14 is at the front side of the machine (right side of the image). For Cyan and Yellow, area 1 is at the front side of the machine (right side of the image) and area 14 is at the rear side of the machine (left side of the image).		
001	Area 0: Bk	*ENG	This is for the synchronizing detection board. [50 to 150 / **100** / 1 %/step]
002	Area 1: Bk	*ENG	
003	Area 2: Bk	*ENG	
004	Area 3: Bk	*ENG	
005	Area 4: Bk	*ENG	
006	Area 5: Bk	*ENG	
007	Area 6: Bk	*ENG	
008	Area 7: Bk	*ENG	
009	Area 8: Bk	*ENG	
010	Area 9: Bk	*ENG	
011	Area 10: Bk	*ENG	
012	Area 11: Bk	*ENG	
013	Area 12: Bk	*ENG	
014	Area 13: Bk	*ENG	

WWW.SERVICE-MANUAL.NET

015	Area 14: Bk	*ENG	
016	Area 15: Bk	*ENG	This is out of the image area. [50 to 150 / **100** / 1 %/step]
033	Area 0: M	*ENG	This is for the synchronizing detection board.
034	Area 1: M	*ENG	[50 to 150 / **100** / 1 %/step]
035	Area 2: M	*ENG	
036	Area 3: M	*ENG	
037	Area 4: M	*ENG	
038	Area 5: M	*ENG	
039	Area 6: M	*ENG	
040	Area 7: M	*ENG	
041	Area 8: M	*ENG	
042	Area 9: M	*ENG	
043	Area 10: M	*ENG	
044	Area 11: M	*ENG	
045	Area 12: M	*ENG	
046	Area 13: M	*ENG	
047	Area 14: M	*ENG	

WWW.SERVICE-MANUAL.NET

048	Area 15: M	*ENG	This is out of the image area. [50 to 150 / **100** / 1 %/step]
065	Area 0: C	*ENG	This is for the synchronizing detection board. [50 to 150 / **100** / 1 %/step]
066	Area 1: C	*ENG	[50 to 150 / **100** / 1 %/step]
067	Area 2: C	*ENG	
068	Area 3: C	*ENG	
069	Area 4: C	*ENG	
070	Area 5: C	*ENG	
071	Area 6: C	*ENG	
072	Area 7: C	*ENG	
073	Area 8: C	*ENG	
074	Area 9: C	*ENG	
075	Area 10: C	*ENG	
076	Area 11: C	*ENG	
077	Area 12: C	*ENG	
078	Area 13: C	*ENG	
079	Area 14: C	*ENG	
080	Area 15: C	*ENG	This is out of the image area. [50 to 150 / **100** / 1 %/step]

WWW.SERVICE-MANUAL.NET

097	Area 0: Y	*ENG	This is for the synchronizing detection board. [50 to 150 / **100** / 1 %/step]
098	Area 1: Y	*ENG	[50 to 150 / **100** / 1 %/step]
099	Area 2: Y	*ENG	
100	Area 3: Y	*ENG	
101	Area 4: Y	*ENG	
102	Area 5: Y	*ENG	
103	Area 6: Y	*ENG	
104	Area 7: Y	*ENG	
105	Area 8: Y	*ENG	
106	Area 9: Y	*ENG	
107	Area 10: Y	*ENG	
108	Area 11: Y	*ENG	
109	Area 12: Y	*ENG	
110	Area 13: Y	*ENG	
111	Area 14: Y	*ENG	
112	Area 15: Y	*ENG	This is out of the image area.

WWW.SERVICE-MANUAL.NET

2181	[Line Position Adj. Result]		
	Displays the values for each correction. ▪ "Paper Int. Mag: Subdot" indicates the magnification correction value between two sheets of paper. ▪ "Mag.Cor. Subdot" indicates the magnification correction value. ▪ "M. Scan Erro." indicates the shift correction value in the main scan direction. ▪ "S. Scan Erro." Indicates the shift correction value in the sub scan direction. ▪ "M. Cor.: Dot" indicates the dot correction value in the main scan direction. ▪ "M. Cor.: Subdot" indicates the sub dot correction value in the main scan direction. ▪ Bk: Black, M: Magenta, C: Cyan, Y: Yellow		
001	Paper Int. Mag: Subdot: Bk	*ENG	[–32768 to 32767 / **0** / 1 pulse/step]
002	Mag.Cor. Subdot: Bk	*ENG	[–32768 to 32767 / **0** / 1 pulse/step]
003	Skew: M	*ENG	[–5000 to 5000 / **0** / 0.001 um/step]
005	M. Scan Erro.: Left: M	*ENG	[–5000 to 5000 / **0** / 0.001 um/step]
006	M. Scan Erro.: Center: M	*ENG	
007	M. Scan Erro.: Right: M	*ENG	
008	S. Scan Erro.: Left: M	*ENG	
009	S. Scan Erro.: Center: M	*ENG	
010	S. Scan Erro.: Right: M	*ENG	
011	M. Cor.: Dot: M	*ENG	[–512 to 511 / **0** / 1 dot/step]
012	M. Cor.: Subdot: M	*ENG	[–15 to 15 / **0** / 1 pulse/step]

System Maintenance

WWW.SERVICE-MANUAL.NET

013	Paper Int. Mag: Subdot: M	*ENG	[–32768 to 32767 / 0 / 1 pulse/step]
014	Mag.Cor. Subdot: M	*ENG	
015	M. Left Mag.: Subdot: M	*ENG	
016	M. Right Mag.: Subdot: M	*ENG	
017	S. Cor.: 600 Line: M	*ENG	[–16384 to 16383 / **0** / 1 line/step]
018	S. Cor.: 600 Sub: M	*ENG	[–1 to 1 / **0** / 0.001 line/step]
019	S. Cor.: 1200 Line: M	*ENG	[–16384 to 16383 / **0** / 1 line/step]
020	S. Cor.: 1200 Sub: M	*ENG	[–1 to 1 / **0** / 0.001 line/step]
021	Skew: C	*ENG	[–5000 to 5000 / **0** / 0.001 um/step]
023	M. Scan Erro.: Left: C	*ENG	[–5000 to 5000 / **0** / 0.001 um/step]
024	M. Scan Erro.: Center: C	*ENG	
025	M. Scan Erro.: Right: C	*ENG	
026	S. Scan Erro.: Left: C	*ENG	
027	S. Scan Erro.: Center: C	*ENG	
028	S. Scan Erro.: Right: C	*ENG	
029	M. Cor.: Dot: C	*ENG	[–512 to 511 / **0** / 1 dot/step]
030	M. Cor.: Subdot: C	*ENG	[–15 to 15 / **0** / 1 pulse/step]
031	Paper Int. Mag: Subdot: C	*ENG	[–32768 to 32767 / **0** / 1 pulse/step]
032	Mag.Cor. Subdot: C	*ENG	
033	M. Left Mag.: Subdot: C	*ENG	

WWW.SERVICE-MANUAL.NET

034	M. Right Mag.: Subdot: C	*ENG	
035	S. Cor.: 600 Line: C	*ENG	[–16384 to 16383 / **0** / 1 line/step]
036	S. Cor.: 600 Sub: C	*ENG	[–1 to 1 / **0** / 0.001 line/step]
037	S. Cor.: 1200 Line: C	*ENG	[–16384 to 16383 / **0** / 1 line/step]
038	S. Cor.: 1200 Sub: C	*ENG	[–1 to 1 / **0** / 0.001 line/step]
039	Skew: Y	*ENG	[–5000 to 5000 / **0** / 0.001 um/step]
041	M. Scan Erro.: Left: Y	*ENG	
042	M. Scan Erro.: Center: Y	*ENG	
043	M. Scan Erro.: Right: Y	*ENG	
044	S. Scan Erro.: Left: Y	*ENG	
045	S. Scan Erro.: Center: Y	*ENG	
046	S. Scan Erro.: Right: Y	*ENG	
047	M. Cor.: Dot: Y	*ENG	[–512 to 511 / **0** / 1 dot/step]
048	M. Cor.: Subdot: Y	*ENG	[–15 to 15 / **0** / 1 pulse/step]
049	Paper Int. Mag: Subdot: Y	*ENG	[–32768 to 32767 / **0** / 1 pulse/step]
050	Mag.Cor. Subdot: Y	*ENG	
051	M. Left Mag.: Subdot: Y	*ENG	
052	M. Right Mag.: Subdot: Y	*ENG	
053	S. Cor.: 600 Line: Y	*ENG	[–16384 to 16383 / **0** / 1 line/step]
054	S. Cor.: 600 Sub: Y	*ENG	[–1 to 1 / **0** / 0.001 line/step]
055	S. Cor.: 1200 Line: Y	*ENG	[–16384 to 16383 / **0** / 1 line/step]
056	S. Cor.: 1200 Sub: Y	*ENG	[–1 to 1 / **0** / 0.001 line/step]

WWW.SERVICE-MANUAL.NET

2182	[Line Position Adj. Offset] (Color) M. Scan: Main scan, S. Scan: Sub-scan		
001	M Magnification	*ENG	Adjusts the line position manually. [-1 to 1 / **0** / 0.001%/step]
002	C Magnification	*ENG	
003	Y Magnification	*ENG	
	When line shifts are not corrected by the automatic line position adjustment, do this SP. Increasing a value reduces the image in the main scan direction. Decreasing a value enlarges the image in the main scan direction.		
004	M. Scan: High: Dot: M	*ENG	[-512 to 511 / **0** / 1 dot/step]
005	M. Scan: High: Subdot: M	*ENG	[-15 to 15 / **0** / 1 pulse/step]
006	M. Scan: Medium: Dot: M	*ENG	[-512 to 511 / **0** / 1 dot/step]
007	M. Scan: Medium: Subdot: M	*ENG	[-15 to 15 / **0** / 1 pulse/step]
008	M. Scan: Low: Dot: M	*ENG	[-512 to 511 / **0** / 1 dot/step]
009	M. Scan: Low: Subdot: M	*ENG	[-15 to 15 / **0** / 1 pulse/step]
010	M. Scan: High: Dot: C	*ENG	[-512 to 511 / **0** / 1 dot/step]
011	M. Scan: High: Subdot: C	*ENG	[-15 to 15 / **0** / 1 pulse/step]
012	M. Scan: Medium: Dot: C	*ENG	[-512 to 511 / **0** / 1 dot/step]
013	M. Scan: Medium: Subdot: C	*ENG	[-15 to 15 / **0** / 1 pulse/step]
014	M. Scan: Low: Dot: C	*ENG	[-512 to 511 / **0** / 1 dot/step]
015	M. Scan: Low: Subdot: C	*ENG	[-15 to 15 / **0** / 1 pulse/step]
016	M. Scan: High: Dot: Y	*ENG	[-512 to 511 / **0** / 1 dot/step]

WWW.SERVICE-MANUAL.NET

017	M. Scan: High: Subdot: Y	*ENG	[-15 to 15 / **0** / 1 pulse/step]
018	M. Scan: Medium: Dot: Y	*ENG	[-512 to 511 / **0** / 1 dot/step]
019	M. Scan: Medium: Subdot: Y	*ENG	[-15 to 15 / **0** / 1 pulse/step]
020	M. Scan: Low: Dot: Y	*ENG	[-512 to 511 / **0** / 1 dot/step]
021	M. Scan: Low: Subdot: Y	*ENG	[-15 to 15 / **0** / 1 pulse/step]
022	S. Scan: High: Line: M	*ENG	[-16384 to 16383 / **0** / 1 line/step]
023	S. Scan: High: Subline: M	*ENG	[–1 to 1 / **0** / 0.001 /line]
024	S. Scan: Medium: Line: M	*ENG	[-16384 to 16383 / **0** / 1 line/step]
025	S. Scan: Medium: Subline: M	*ENG	[–1 to 1 / **0** / 0.001 /line]
026	S. Scan: Low: Line: M	*ENG	[-16384 to 16383 / **0** / 1 line/step]
027	S. Scan: Low: Subline: M	*ENG	Not used
028	S. Scan: High: Line: C	*ENG	[-16384 to 16383 / **0** / 1 line/step]
029	S. Scan: High: Subline: C	*ENG	[–1 to 1 / **0** / 0.001 /line]
030	S. Scan: Medium: Line: C	*ENG	[-16384 to 16383 / **0** / 1 line/step]
031	S. Scan: Medium: Subline: C	*ENG	[–1 to 1 / **0** / 0.001 /line]
032	S. Scan: Low: Line: C	*ENG	[-16384 to 16383 / **0** / 1 line/step]
033	S. Scan: Low: Subline: C	*ENG	Not used
034	S. Scan: High: Line: Y	*ENG	[-16384 to 16383 / **0** / 1 line/step]
035	S. Scan: High: Subline: Y	*ENG	[–1 to 1 / **0** / 0.001 /line]
036	S. Scan: Medium: Line: Y	*ENG	[-16384 to 16383 / **0** / 1 line/step]

WWW.SERVICE-MANUAL.NET

037	S. Scan: Medium: Subline: Y	*ENG	[–1 to 1 / **0** / 0.001 /line]
038	S. Scan: Low: Line: Y	*ENG	[-16384 to 16383 / **0** / 1 line/step]
039	S. Scan: Low: Subline: Y	*ENG	Not used

2185	[Main Scan Length Detection Disp.]		
	Displays/adjusts the target value for the main scan magnification correction of the line position adjustment. After replacing the laser optics housing unit, input the standard value for Bk provided with the new unit. For details, see "Laser Optics Housing Unit" in the "Replacement Adjustment" section. It is not necessary to input the values for the other colors; these are automatically adjusted after doing the line position adjustment.		
001	Bk	*ENG	[0 to 266667 / **249449** / 1 sub-dot/step]
002	M	*ENG	
003	C	*ENG	
004	Y	*ENG	

WWW.SERVICE-MANUAL.NET

2193	[MUSIC Condition Set] Line Position Adjustment: Condition Setting		
001	Auto Execution	*ENG	[0 or 1 / **1** / 1] 0: OFF, 1: ON
	Enables/disables the automatic line position adjustment		
002	Page: Job End: BW+FC	*ENG	[0 to 999 / **500** / 1 page/step]
	Adjusts the threshold of the line position adjustment for BW and color printing mode after job end.		
003	Page: Job End: FC	*ENG	[0 to 999 / **200** / 1 page/step]
	Adjusts the threshold of the line position adjustment for color printing mode after job end.		
004	Page: Interrupt: BW+FC	*ENG	[0 to 999 / **200** / 1 page/step]
	Adjusts the threshold of the line position adjustment for BW and color printing mode during job.		
005	Page: Interrupt: FC	*ENG	[0 to 999 / **200** / 1 page/step]
	Adjusts the threshold of the line position adjustment for color printing mode during jobs.		
006	Page: Stand-By: BW	*ENG	[0 to 999 / **100** / 1 page/step]
	Adjusts the threshold of the line position adjustment for BW printing mode in stand-by mode. The line position adjustment is done when the number of outputs in BW printing mode reaches the value specified with this SP and the condition of SP2-193-008 or SP2-193-009 is satisfied.		

WWW.SERVICE-MANUAL.NET

007	Page: Stand-By: FC	*ENG	[0 to 999 / **100** / 1 page/step]
	Adjusts the threshold of the line position adjustment for FC printing mode in stand-by mode. The line position adjustment is done when the number of outputs in color printing mode reaches the value specified with this SP and the condition of SP2-193-008 or SP2-193-009 is satisfied.		
008	Temp.	*ENG	[0 to 100 / **5** / 1deg/step]
	Adjust the temperature change threshold for the line position adjustment (Mode b: adjustment once). The timing for line position adjustment depends on the combinations of several conditions.		
009	Time	*ENG	[1 to 1440 / **300** / 1 minute/step]
	Adjust the time threshold for the line position adjustment (Mode b: adjustment once). The timing for line position adjustment depends on the combinations of several conditions.		
010	Magnification	*ENG	[0 to 10 / **0.1** / 0.01%/step]
	Adjusts the magnification threshold for line position adjustment. If the length of the main scan is changed by this amount since the previous MUSIC, then MSUIC is done again.		
011	Temp. 2	*ENG	[0 to 100 / **10** / 1deg/step]
	Adjust the temperature change threshold for the line position adjustment (Mode a: adjustment twice). The timing for line position adjustment depends on the combinations of several conditions.		

WWW.SERVICE-MANUAL.NET

012	Time 2	*ENG	[1 to 9999 / **600** / 1 minute/step]
	Adjust the time threshold for the line position adjustment (Mode a: adjustment twice). The timing for line position adjustment depends on the combinations of several conditions.		
013	Page: Power ON:BW+FC	*ENG	[0 to 999 / **200** / 1 page/step]
	Adjusts the threshold of the line position adjustment for BW and FC printing mode at power-on. The line position adjustment is done when the number of outputs in BW and color printing mode reaches the value specified with this SP and the condition of SP2-193-008 or SP2-193-009 is satisfied.		

2194	[MUSIC Execution Result] Line Position Adjustment: Execution Result		
001	Year	*ENG	[0 to 99 / **0** / 1 year/step]
	Displays the year of the last MUSIC execution.		
002	Month	*ENG	[1 to 12 / **1** / 1 month/step]
	Displays the month of the last MUSIC execution.		
003	Day	*ENG	[1 to 31 / **1** / 1 day/step]
	Displays the date of the last MUSIC execution.		
004	Hour	*ENG	[0 to 23 / **0** / 1 hour/step]
	Displays the time (hour) of the last MUSIC execution.		
005	Minute	*ENG	[0 to 59 / **0** / 1 minute/step]
	Displays the time (minute) of the last MUSIC execution.		

WWW.SERVICE-MANUAL.NET

006	Temperature	*ENG	[0 to 100 / **0** / 1 deg/step]
	Displays the temperature of the last MUSIC execution.		
007	Execution Result	*ENG	[0 or 1 / **0** / 1 /step] 0: Completed successfully, 1: Failed
008	Number of Execution	*ENG	[0 to 999999 / **0** / 1 times/step]
009	Number of Failure	*ENG	[0 to 999999 / **0** / 1 times/step]
010	Error Result: M	*ENG	[0 to 9 / **0** / 1 /step] 0: Not done 1: Completed successfully 2: Cannot detect patterns 3: Fewer lines on the pattern than the target 4: Not used 5: Out of the adjustment range 6 to 9: Not used
011	Error Result: C	*ENG	
012	Error Result: Y	*ENG	

2198	[Music A/D Interval]		
	ADC Trigger Counter		
001	ADC Trigger Counter	*ENG	[7.5 to 20 / **10** / 0.1 μs/step]

2220	[Skew Origin Set]		
	Executes the skew motor initialization in the laser optics unit.		
001	M: Skew Motor	-	-
002	C: Skew Motor	-	-
003	Y: Skew Motor	-	-

WWW.SERVICE-MANUAL.NET

2221	[LD Power] LD Power Control		
	Adjusts the fixed LD power for each line speed and color. These SPs are activated only when SP3-041-002 is set to "0". Plain: High speed, Thick 1: Middle speed, Thick 2&Fine: Low speed		
001	Plain: Bk	*ENG	[0 to 200 / **100** / 1%/step] Increasing this value makes the image density darker.
002	Plain: M	*ENG	
003	Plain: C	*ENG	
004	Plain: Y	*ENG	
005	Thick 1: Bk	*ENG	
006	Thick 1: M	*ENG	
007	Thick 1: C	*ENG	
008	Thick 1: Y	*ENG	
009	Thick 2&FINE: Bk	*ENG	
010	Thick 2&FINE: M	*ENG	
011	Thick 2&FINE: C	*ENG	
012	Thick 2&FINE: Y	*ENG	

WWW.SERVICE-MANUAL.NET

2229	[Development DC Vias] Development DC Bias Adjustment		
	Adjusts the development bias. Development bias is automatically adjusted during process control; therefore, adjusting these settings has no effect while Process Control (SP3-041-001 Default: ON) is activated. After deactivating Process Control with SP3-041-001, the values in these SP modes are used for printing. Plain: High speed, Thick 1: Middle speed, Thick 2&Fine: Low speed		
001	Plain: Bk	*ENG	[0 to 800 / **550** / 10 –V/step]
002	Plain: M	*ENG	
003	Plain: C	*ENG	
004	Plain: Y	*ENG	
005	Thick 1: Bk	*ENG	
006	Thick 1: M	*ENG	
007	Thick 1: C	*ENG	
008	Thick 1: Y	*ENG	
009	Thick 2&FINE:Bk	*ENG	
010	Thick 2&FINE:M	*ENG	
011	Thick 2&FINE:C	*ENG	
012	Thick 2&FINE:Y	*ENG	

WWW.SERVICE-MANUAL.NET

2241	[Temperature/Humidity: Display]		
	Displays the environment temperature and humidity.		
001	Temperature	-	[–1280 to 1270 / - / 0.1deg/step]
002	Relative Humidity	-	[0 to 1000 / - / 0.1 %RH/step]
003	Absolute Humidity	-	[0 to 100 / - / 0.01 g/m^3/step]

2302	[Environmental Correction: Transfer] Environmental Correction: Image Transfer Belt Unit		
001	Current Environmental Display	-	Displays the current environment condition.
002	Forced Setting	*ENG	Sets the environment condition manually. [0 to 6 / **0** / 1 /step] 0: Automatic environment control 1: LL (Low temperature/ Low humidity) 2: ML (Middle temperature/ Low humidity) 3: MM (Middle temperature/ Middle humidity) 4: MH (Middle temperature/ High humidity) 5: HH (High temperature/ High humidity)
003	Absolute Humidity: Threshold 1	*ENG	Adjusts the threshold value between LL and ML. [0 to 100 / **4** / 0.01 g/m^3/step]
004	Absolute Humidity: Threshold 2	*ENG	Adjusts the threshold value between ML and MM. [0 to 100 / **8** / 0.01 g/m^3/step]

WWW.SERVICE-MANUAL.NET

005	Absolute Humidity: Threshold 3	*ENG	Adjusts the threshold value between MM and MH. [0 to 100 / **16** / 0.01 g/m^3/step]
006	Absolute Humidity: Threshold 4	*ENG	Adjusts the threshold value between MH and HH. [0 to 100 / **24** / 0.01 g/m^3/step]
007	Temp Threshold	*ENG	[–5 to 30 / **5** / 1 deg/step]

2308	[Paper Size Correction]		
	Adjusts the threshold value for the paper size correction.		
001	Threshold 1	*ENG	[0 to 350 / **297** / 1 mm/step] Threshold 1 ≤ paper: Paper is detected as "S1" size.
002	Threshold 2	*ENG	[0 to 350 / **257** / 1 mm/step] Threshold 2 ≤ paper ≤ Threshold 1: Paper is detected as "S2" size.
003	Threshold 3	*ENG	[0 to 350 / **210** / 1 mm/step] Threshold 3 ≤ paper ≤ Threshold 2: Paper is detected as "S3" size.
004	Threshold 4	*ENG	[0 to 350 / **148** / 1 mm/step] Threshold 4 ≤ paper ≤ Threshold 3: Paper is detected as "S4" size. Paper ≤ Threshold 4: Paper is detected as "S5" size.

WWW.SERVICE-MANUAL.NET

2311	[Non Image Area: Bias]		
001	Image Transfer	*ENG	Adjusts the bias of the image transfer belt between images. This value is added to the value of the image transfer belt bias. [10 to 250 / **100** / 5 %/step]
002	Paper Transfer	*ENG	Adjusts the bias of the paper transfer roller between images. [0 to 2000 / **500** / 1 V/step]

2326	[Transfer Roller CL: Bias] Transfer Roller Cleaning: Bias Adjustment		
001	Positive	*ENG	[0 to 2100 / **500** / 100 V /step]
	Adjusts the positive voltage of the paper transfer roller for cleaning the paper transfer roller.		
002	Negative	*ENG	[10 to 400 / **100** / 10 %/step]
	Adjusts the negative current of the paper transfer roller for cleaning the paper transfer roller.		
003	Positive	*ENG	[0 to 2100 / **2000** / 100 V/step]
	Adjusts the negative current limit of the paper transfer roller for cleaning the paper transfer roller.		
004	Negative	*ENG	[10 to 400 / **100** / 10 %/step]

WWW.SERVICE-MANUAL.NET

2351	[Common: BW: Bias] Image Transfer Belt: B/W: Bias Adjustment Plain: High speed, Thick 1: Middle speed, Thick 2&Fine: Low speed		
001	ITB unit: Plain	*ENG	[0 to 80 / **C2.5c: 33, C2.5d: 41** / 1 μA]
	Adjusts the current for the image transfer belt in B/W mode for plain paper.		
002	ITB unit: Thick 1	*ENG	[0 to 80 / **25** / 1 μA]
	Adjusts the current for the image transfer belt in B/W mode for thick 1 paper.		
003	ITB unit: Thick 2 & FINE	*ENG	[0 to 80 / **12** / 1 μA]
	Adjusts the current for the image transfer belt in B/W mode for thick 2 paper or FINE mode.		

2357	[Common: FC: Bias] Image Transfer Belt: Full Color: Bias Adjustment Plain: High speed, Thick 1: Middle speed, Thick 2&Fine: Low speed		
001	ITB unit: Plain: Bk	*ENG	[0 to 80 / **C2.5c: 30, C2.5d: 37** / 1 μA]
	Adjusts the current for the image transfer belt for Black in full color mode for plain paper.		
002	ITB unit: Plain: M	*ENG	[0 to 80 / **C2.5c: 33, C2.5d: 41** / 1 μA]
	Adjusts the current for the image transfer belt for Magenta in full color mode for plain paper.		
003	ITB unit: Plain: C	*ENG	[0 to 80 / **C2.5c: 30, C2.5d: 37** / 1 μA]
	Adjusts the current for the image transfer belt for Cyan in full color mode for plain paper.		
004	ITB unit: Plain: Y	*ENG	[0 to 80 / **C2.5c: 38, C2.5d: 47** / 1 μA]
	Adjusts the current for the image transfer belt for Yellow in full color mode for plain paper.		
005	ITB unit: Thick 1: Bk	*ENG	[0 to 80 / **22** / 1 μA]
	Adjusts the current for the image transfer belt for Black in full color mode for thick 1 paper.		

WWW.SERVICE-MANUAL.NET

006	ITB unit: Thick 1: M	*ENG	[0 to 80 / **25** / 1 μA]
	Adjusts the current for the image transfer belt for Magenta in full color mode for thick 1 paper.		
007	ITB unit: Thick 1: C	*ENG	[0 to 80 / **25** / 1 μA]
	Adjusts the current for the image transfer belt for Cyan in full color mode for thick 1 paper.		
008	ITB unit: Thick 1: Y	*ENG	[0 to 80 / **28** / 1 μA]
	Adjusts the current for the image transfer belt for Yellow in full color mode for thick 1 paper.		
009	ITB unit: Thick 2 & FINE: Bk	*ENG	[0 to 80 / **11** / 1 μA]
	Adjusts the current for the image transfer belt for Black in full color mode for Thick 2 and fine.		
010	ITB unit: Thick 2 & FINE: M	*ENG	[0 to 80 / **12** / 1 μA]
	Adjusts the current for the image transfer belt for Magenta in full color mode for Thick 2 and fine.		
011	ITB unit: Thick 2 & FINE: C	*ENG	[0 to 80 / **11** / 1 μA]
	Adjusts the current for the image transfer belt for Cyan in full color mode for Thick 2 and fine.		
012	ITB unit: Thick 2 & FINE: Y	*ENG	[0 to 80 / **14** / 1 μA]
	Adjusts the current for the image transfer belt for Yellow in full color mode for Thick 2 and fine.		

WWW.SERVICE-MANUAL.NET

2360	[Common: BW Environment Correction]		
001	ITB unit: Plain	*ENG	[1 to 60 / **1** / 1 /step]
002	ITB unit: Thick 1	*ENG	
003	ITB unit: Thick 2	*ENG	
004	ITB unit: Plain: Bk	*ENG	[1 to 60 / **13**/ 1 /step]
005	ITB unit: Plain: M	*ENG	[1 to 60 / **2** / 1 /step]
006	ITB unit: Plain: C	*ENG	
007	ITB unit: Plain: Y	*ENG	
008	ITB unit: Thick 1: Bk	*ENG	[1 to 60 / **31** / 1 /step]
009	ITB unit: Thick 1: M	*ENG	[1 to 60 / **2** / 1 /step]
010	ITB unit: Thick 1: C	*ENG	
011	ITB unit: Thick 1: Y	*ENG	
012	ITB unit: Thick 2: Bk	*ENG	[1 to 60 / **31** / 1 /step]
013	ITB unit: Thick 2: M	*ENG	[1 to 60 / **2** / 1 /step]
014	ITB unit: Thick 2: C	*ENG	[1 to 60 / **1** / 1 /step]
015	ITB unit: Thick 2: Y	*ENG	[1 to 60 / **2** / 1 /step]

WWW.SERVICE-MANUAL.NET

2401	[Plain: Bias]		
	Adjusts the DC voltage of the discharge plate for plain paper. Plain: High speed, Thick 1: Middle speed, Thick 2&Fine: Low speed		
001	Separation DC: Plain: 1st Side	*ENG	[0 to 4000 / **0** / 10 –V/step]
002	Separation DC: Plain: 2nd Side	*ENG	[0 to 4000 / **0** / 10 –V/step]
003	Separation DC: 1200: 1st Page	*ENG	[0 to 4000 / **0** / 10 –V/step]
004	Separation DC: 1200: 2nd Side	*ENG	[0 to 4000 / **0** / 10 –V/step]

2403	[Plain: Bias: BW]		
	Adjusts the current for the paper transfer roller for plain paper in black-and-white mode. Plain: High speed, Thick 1: Middle speed, Thick 2&Fine: Low speed		
001	Paper Transfer: Plain: 1st Side	*ENG	[0 to 250 / **C2.5c: 30, C2.5d: 38** / 1 –μA /step]
002	Paper Transfer: Plain: 2nd Side	*ENG	
003	Paper Transfer: 1200: 1st Side	*ENG	[0 to 250 / **7** / 1 –μA /step]
004	Paper Transfer: 1200: 2nd Side	*ENG	[0 to 250 / **12** / 1 –μA /step]

System Maintenance

WWW.SERVICE-MANUAL.NET

2407	[Plain: Bias: FC]		
	Adjusts the current for the paper transfer roller for plain paper in full color mode. Plain: High speed, Thick 1: Middle speed, Thick 2&Fine: Low speed		
001	Paper Transfer: Plain: 1st Side	*ENG	[0 to 250 / **C2.5c: 36, C2.5d: 44** / 1 –μA /step]
002	Paper Transfer: Plain: 2nd Side	*ENG	[0 to 250 / **C2.5c: 45, C2.5d: 55** / 1 –μA /step]
003	Paper Transfer: 1200: 1st Side	*ENG	[0 to 250 / **10** / 1 –μA /step]
004	Paper Transfer: 1200: 2nd Side	*ENG	[0 to 250 / **12** / 1 –μA /step]

2411	[Plain: Paper Size Correction]		
	Adjusts the size correction coefficient for the paper transfer roller current for each paper size. SP2403 and SP2407 are multiplied by these SP values. Plain: High speed, Thick 1: Middle speed, Thick 2&Fine: Low speed		
001	Paper Transfer: Plain : 1st Side: S1	*ENG	[100 to 600 / **100** / 5%/step] S1 size > 297 mm (Paper width)
002	Paper Transfer: Plain: 2nd Side: S1	*ENG	
003	Paper Transfer: 1200: 1st Side: S1	*ENG	
004	Paper Transfer: 1200: 2nd Side: S1	*ENG	

WWW.SERVICE-MANUAL.NET

005	Paper Transfer: Plain: 1st Side: S2	*ENG	[100 to 600 / **105** / 5%/step] 297 mm > S2 size > 275 mm (Paper width)
006	Paper Transfer: Plain: 2nd Side: S2	*ENG	[100 to 600 / **120** / 5%/step] 297 mm > S2 size > 275 mm (Paper width)
007	Paper Transfer: 1200: 1st Side: S2	*ENG	[100 to 600 / **120** / 5%/step] 297 mm > S2 size > 275 mm (Paper width)
008	Paper Transfer: 1200: 2nd Side: S2	*ENG	[100 to 600 / **150** / 5%/step]
009	Paper Transfer: Plain: 1st Side: S3	*ENG	[100 to 600 / **110** / 5%/step] 275 mm > S3 size > 210 mm (Paper width)
010	Paper Transfer: Plain: 2nd Side: S3	*ENG	[100 to 600 / **140** / 5%/step] 275 mm > S3 size > 210 mm (Paper width)
011	Paper Transfer: 1200: 1st Side: S3	*ENG	
012	Paper Transfer: 1200: 2nd Side: S3	*ENG	[100 to 600 / **300** / 5%/step]
013	Paper Transfer: Plain: 1st Side: S4	*ENG	[100 to 600 / **115** / 5%/step] 210 mm > S4 size > 148 mm (Paper width)
014	Paper Transfer: Plain: 2nd Side: S4	*ENG	[100 to 600 / **160** / 5%/step] 210 mm > S4 size > 148 mm (Paper width)

WWW.SERVICE-MANUAL.NET

015	Paper Transfer: 1200: 1st Side: S4	*ENG	[100 to 600 / **240** / 5%/step] 210 mm > S4 size > 148 mm (Paper width)
016	Paper Transfer: 1200: 2nd Side: S4	*ENG	[100 to 600 / **340** / 5%/step]
017	Paper Transfer: Plain: 1st Side: S5	*ENG	[100 to 600 / **120** / 5%/step] 148 mm > S5 size (Paper width)
018	Paper Transfer: Plain: 2nd Side: S5	*ENG	[100 to 600 / **180** / 5%/step] 148 mm > S5 size (Paper width)
019	Paper Transfer: 1200: 1st Side: S5	*ENG	[100 to 600 / **300** / 5%/step] 148 mm > S5 size (Paper width)
020	Paper Transfer: 1200: 2nd Side: S5	*ENG	[100 to 600 / **400** / 5%/step]

WWW.SERVICE-MANUAL.NET

2421	[Plain: Leading Edge Correction] Plain Paper: Leading Edge Correction		
	Adjusts the correction to the paper transfer roller current at the paper leading edge in each mode. SP2403 and SP2407 are multiplied by these SP values. Note ▪ The paper leading edge area can be adjusted with SP2422.		
001	Paper Transfer: Plain: 1st Side	*ENG	[0 to 400 / **100** / 5%/step]
002	Paper Transfer: Plain: 2nd Side	*ENG	[0 to 400 / **100** / 5%/step]
003	Paper Transfer: 1200: 1st Side	*ENG	[0 to 400 / **100** / 5%/step]
004	Paper Transfer: 1200: 2nd side	*ENG	
2421 005-008	Adjusts the correction to the discharge plate current at the paper leading edge in each mode. SP2401 is multiplied by these SPs values. Note ▪ The paper leading edge area can be adjusted with SP2422.		
005	Separation DC: Plain: 1st Side	*ENG	[0 to 400 / **100** / 5%/step]
006	Separation DC: Plain: 2nd Side	*ENG	
007	Separation DC: 1200: 1st Side	*ENG	
008	Separation DC: 1200: 2nd Side	*ENG	

System Maintenance

WWW.SERVICE-MANUAL.NET

2422	[Plain: Switch Timing: Lead. Edge]		
	Adjusts the bias/ voltage switch timing of the paper transfer roller/ discharge plate at the paper leading edge between the erase margin area and the image area. Plain: High speed, Thick 1: Middle speed, Thick 2&Fine: Low speed		
001	Paper Transfer: Plain: 1st Side	*ENG	[0 to 50 / **0** / 2 mm/step]
002	Paper Transfer: Plain: 2nd Side	*ENG	
003	Paper Transfer: 1200: 1st Side	*ENG	
004	Paper Transfer: 1200: 2nd side	*ENG	
005	Separation DC: Plain: 1st Side	*ENG	
006	Separation DC: Plain: 2nd Side	*ENG	
007	Separation DC: 1200: 1st Side	*ENG	
008	Separation DC: 1200: 2nd Side	*ENG	

WWW.SERVICE-MANUAL.NET

2423	[Plain: Trailing Edge Correction] Plain Paper: Trailing Edge Correction		
	Adjusts the correction coefficient to the paper transfer roller current for the paper trailing edge in each mode. SP2403 and SP2407 are multiplied by these SP values. Note ▪ The paper trailing edge area can be adjusted with SP2424.		
001	Paper Transfer: Plain: 1st Side	*ENG	[0 to 400 / **100** / 5%/step]
002	Paper Transfer: Plain: 2nd Side	*ENG	
003	Paper Transfer: 1200: 1st Side	*ENG	
004	Paper Transfer: 1200: 2nd side	*ENG	
005	Separation DC: Plain: 1st Side	*ENG	
006	Separation DC: Plain: 2nd Side	*ENG	
007	Separation DC: 1200: 1st Side	*ENG	
008	Separation DC: 1200: 2nd Side	*ENG	

System Maintenance

WWW.SERVICE-MANUAL.NET

2424	[Plain: Switch Timing: Trail. Edge]		
	Adjusts the bias/voltage switch timing of the paper transfer roller/discharge plate at the paper trailing edge between the erase margin area and the image area. Plain: High speed, Thick 1: Middle speed, Thick 2&Fine: Low speed		
001	Paper Transfer: Plain: 1st Side	*ENG	[0 to 50 / **0** / 2 mm/step]
002	Paper Transfer: Plain: 2nd Side	*ENG	
003	Paper Transfer: 1200: 1st Side	*ENG	
004	Paper Transfer: 1200: 2nd side	*ENG	
005	Separation DC: Plain: 1st Side	*ENG	
006	Separation DC: Plain: 2nd Side	*ENG	
007	Separation DC: 1200: 1st Side	*ENG	
008	Separation DC: 1200: 2nd Side	*ENG	

2451	[Thin: Bias]		
	Adjusts the DC voltage of the discharge plate for thin paper. Plain: High speed, Thick 1: Middle speed, Thick 2&Fine: Low speed		
001	Separation DC: Plain: 1st Side	*ENG	[0 to 4000 / **0** / 10 –V/step]
003	Separation DC: 1200: 1st Side	*ENG	

WWW.SERVICE-MANUAL.NET

2453	[Thin: Bias: BW]		
	Adjusts the current for the paper transfer roller for thin paper in black-and-white mode. Plain: High speed, Thick 1: Middle speed, Thick 2&Fine: Low speed		
001	Paper Transfer: Plain: 1st Side	*ENG	[0 to 250 / **C2.5c: 30, C2.5d: 38** / 1 –μA /step]
003	Paper Transfer: 1200: 1st Side	*ENG	[0 to 250 / **11** / 1 –μA /step]

2457	[Thin: Bias: FC]		
	Adjusts the current for the paper transfer roller for thin paper in full color mode. Plain: High speed, Thick 1: Middle speed, Thick 2&Fine: Low speed		
001	Paper Transfer: Plain: 1st Side	*ENG	[0 to 250 / **C2.5c: 40, C2.5d: 50** / 1 –μA /step]
003	Paper Transfer: 1200: 1st Side	*ENG	[0 to 250 / **15** / 1 –μA /step]

2461	[Thin: Paper Size Correction]		
	Adjusts the size correction coefficient for the paper transfer roller current for each paper size. SP2453 and SP2457 are multiplied by these SP values. Plain: High speed		
001	Paper Transfer: Plain: 1st Side: S1	*ENG	[100 to 600 / **100** / 5%/step] S1 size > 297 mm (Paper width)
005	Paper Transfer: Plain: 1st Side: S2	*ENG	[100 to 600 / **120** / 5%/step] 297 mm > S2 size > 275 mm (Paper width)

WWW.SERVICE-MANUAL.NET

009	Paper Transfer: Plain: 1st Side: S3	*ENG	[100 to 600 / **140** / 5%/step] 297 mm > S2 size > 275 mm (Paper width)
013	Paper Transfer: Plain: 1st Side: S4	*ENG	[100 to 600 / **160** / 5%/step] 297 mm > S2 size > 275 mm (Pape r width)
017	Paper Transfer: Plain: 1st Side: S5	*ENG	[100 to 600 / **180** / 5%/step]

2471	[Thin: Leading Edge Correction] Thin Paper: Leading Edge Correction		
	Adjusts the correction to the paper transfer roller current at the paper leading edge in each mode. SP2453 and SP2457 are multiplied by these SP values. Plain: High speed, 1200: Low speed Note ▪ The paper leading edge area can be adjusted with SP2472.		
001	Paper Transfer: Plain: 1st Side	*ENG	[0 to 400 / **100** / 5%/step]
003	Paper Transfer: 1200: 1st Side	*ENG	
2471	Adjusts the correction to the discharge plate current at the paper leading edge in each mode. SP2451 is multiplied by these SP values. Note ▪ The paper leading edge area can be adjusted with SP2472.		
005	Separation DC: Plain: 1st Side	*ENG	[0 to 400 / **100** / 5%/step]
007	Separation DC: 1200: 1st Side	*ENG	

WWW.SERVICE-MANUAL.NET

2472	[Thin: Switch Timing: Lead. Edge]		
	Adjusts the bias/ voltage switch timing of the paper transfer roller/ discharge plate at the paper leading edge between the erase margin area and the image area. Plain: High speed, 1200: Low speed,		
001	Paper Transfer: Plain: 1st Side	*ENG	[0 to 50 / **0** / 2 mm/step]
003	Paper Transfer: 1200: 1st Side	*ENG	
005	Separation DC: Plain: 1st Side	*ENG	
007	Separation DC: 1200: 1st Side	*ENG	

2473	[Thin: Trailing Edge Correction] Thin Paper: Trailing Edge Correction		
	Adjusts the correction coefficient to the paper transfer roller current for the paper trailing edge in each mode. SP2453 and SP2457 are multiplied by these SP values. Plain: High speed, 1200: Low speed Note ▪ The paper trailing edge area can be adjusted with SP2474.		
001	Paper Transfer: Plain: 1st Side	*ENG	[0 to 400 / **100** / 5%/step]
003	Paper Transfer: 1200: 1st Side	*ENG	[0 to 400 / **100** / 5%/step]
005	Separation DC: Plain: 1st Side	*ENG	[0 to 400 / **100** / 5%/step]
007	Separation DC: 1200: 1st Side	*ENG	[0 to 400 / **100** / 5%/step]

System Maintenance

WWW.SERVICE-MANUAL.NET

2474	[Thin: Switch Timing: Trail. Edge]		
	Adjusts the bias/voltage switch timing of the paper transfer roller/discharge plate at the paper trailing edge between the erase margin area and the image area. Plain: High speed, 1200: Low speed		
001	Paper Transfer: Plain: 1st Side	*ENG	[0 to 50 / **0** / 2 mm/step]
003	Paper Transfer: 1200: 1st Side	*ENG	
005	Separation DC: Plain: 1st Side	*ENG	[0 to 50 / **0** / 1 mm/step]
007	Separation DC: 1200: 1st Side	*ENG	

2480	[Thin: Environment Correction] Plain: High speed, 1200: Low speed		
001	Separation DC: Plain: 1st Side	*ENG	[1 to 60 / **26** / 1 /step]
003	Paper Transfer: Plain: BW: 1st Side	*ENG	[1 to 60 / **11** / 1 /step]
005	Paper Transfer: Plain: FC: 1st Side	*ENG	[1 to 60 / **1** / 1 /step]
007	Separation DC: 1200: 1st Side	*ENG	[1 to 60 / **26** / 1 /step]
009	Paper Transfer: 1200: BW: 1st Side	*ENG	[1 to 60 / **11** / 1 /step]
011	Paper Transfer: 1200: FC: 1st Side	*ENG	[1 to 60 / **1** / 1 /step]

2481	[Glossy: Bias]		
001	Separation DC: 1st Side	*ENG	[0 to 4000 / **0** / 10 –V/step]
	Adjusts the DC voltage of the discharge plate for glossy paper.		

WWW.SERVICE-MANUAL.NET

2482	[Glossy: Bias: BW]		
001	Paper Transfer: 1st Side	*ENG	[0 to 250 / **12** / 1 –μA /step]
	Adjusts the current for the paper transfer roller for glossy paper in black-and-white mode.		

2483	[Glossy: Bias: FC]		
001	Paper Transfer: 1st Side	*ENG	[0 to 250 / **15** / 1 –μA /step]
	Adjusts the current for the paper transfer roller for glossy paper in full color mode.		

2484	[Glossy: Paper Size Correction]		
001	Paper Transfer: 1st Side: S1	*ENG	[100 to 600 / **100** / 5%/step]
005	Paper Transfer: 1st Side: S2	*ENG	[100 to 600 / **120** / 5%/step]
009	Paper Transfer: 1st Side: S3	*ENG	[100 to 600 / **140** / 5%/step]
013	Paper Transfer: 1st Side: S4	*ENG	[100 to 600 / **160** / 5%/step]
017	Paper Transfer: 1st Side: S5	*ENG	[100 to 600 / **180** / 5%/step]

2485	[Glossy: Leading Edge Correction]		
001	Paper Transfer: 1st Side	*ENG	[10 to 400 / **100** / 5%/step]
005	Separation DC: 1st Side	*ENG	[10 to 400 / **100** / 5%/step]]

2486	[Glossy: Switch Timing: Lead. Edge]		
001	Paper Transfer: 1st Side	*ENG	[0 to 50 / **0** / 2 mm/step]
005	Separation DC: 1st Side	*ENG	

System Maintenance

WWW.SERVICE-MANUAL.NET

2487	[Glossy: Trailing Edge Correction]		
001	Paper Transfer: 1st Side	*ENG	[0 to 400 / **100** / 5 %/step]
005	Separation DC: 1st Side	*ENG	

2488	[Glossy: Switch Trail. Edge]		
001	Paper Transfer: 1st Side	*ENG	[0 to 50 / **0** / 2 mm/step]
005	Separation DC: 1st Side	*ENG	

2489	[Glossy: Environment Correction]		
001	Separation DC: 1st Side	*ENG	[1 to 60 / **26** / 1 /step]
003	Paper Transfer: BW: 1st Side	*ENG	[1 to 60 / **11** / 1 /step]
005	Paper Transfer: FC: 2nd Side	*ENG	[1 to 60 / **1** / 1 /step]

2501	[Thick 1: Bias]		
	Adjusts the DC voltage of the discharge plate for thick 1 paper. Plain: High speed, 1200: Low speed		
001	Separation DC: Plain: 1st Side	*ENG	[0 to 4000 / **1000** / 10 –V/step]
002	Separation DC: Plain: 2nd Side	*ENG	
003	Separation DC: 1200: 1st Side	*ENG	

WWW.SERVICE-MANUAL.NET

2502	[Thick 1: Bias: BW]		
	Adjusts the current for the paper transfer roller for thick 1 paper in black-and-white mode. Plain: High speed, 1200: Low speed		
001	Paper Transfer: Plain: 1st Side	*ENG	[0 to 250 / **24** / 1 –μA /step]
002	Paper Transfer: Plain: 2nd Side	*ENG	
003	Separation DC: 1200: 1st Side	*ENG	[0 to 250 / **12** / 1 –μA /step]

2507	[Thick 1: Bias: FC]		
	Adjusts the current for the paper transfer roller for thick 1 paper in full color mode. Plain: High speed, 1200: Low speed		
001	Paper Transfer: Plain: 1st Side	*ENG	[0 to 250 / **30** / 1 –μA /step]
002	Paper Transfer: Plain: 2nd Side	*ENG	
003	Separation DC: 1200: 1st Side	*ENG	[0 to 250 / **15** / 1 –μA /step]

2511	[Thick 1: Paper Size Correction]		
	Adjusts the size correction coefficient for the paper transfer roller current for each paper size. SP2502 and SP2507 are multiplied by these SP values. Plain: High speed, 1200: Low speed		
001	Paper Transfer: Plain: 1st Side: S1	*ENG	[100 to 600 / **100** / 5%/step] S1 size > 297 mm (Paper width)
002	Paper Transfer: Plain: 2nd Side: S1	*ENG	

System Maintenance

WWW.SERVICE-MANUAL.NET

003	Paper Transfer: 1200: 1st Side: S1	*ENG	[100 to 600 / **100** / 5%/step] S1 size > 297 mm (Paper width)
005	Paper Transfer: Plain: 1st Side: S2	*ENG	[100 to 600 / **105** / 5%/step] 297 mm > S2 size > 275 mm (Paper width)
006	Paper Transfer: Plain: 2nd Side: S2	*ENG	[100 to 600 / **130** / 5%/step] 297 mm > S2 size > 275 mm (Paper width)
007	Paper Transfer: 1200: 1st Side: S2	*ENG	[100 to 600 / **120** / 5%/step] 297 mm > S2 size > 275 mm (Paper width)
009	Paper Transfer: Plain: 1st Side: S3	*ENG	[100 to 600 / **110** / 5%/step] 275 mm > S3 size > 210 mm (Paper width)
010	Paper Transfer: Plain: 2nd Side: S3	*ENG	[100 to 600 / **160** / 5%/step] 275 mm > S3 size > 210 mm (Paper width)
011	Paper Transfer: 1200: 1st Side: S3	*ENG	[100 to 600 / **140** / 5%/step] 275 mm > S3 size > 210 mm (Paper width)
013	Paper Transfer: Plain 1: 1st Side: S4	*ENG	[100 to 600 / **115** / 5%/step] 210 mm > S4 size > 148 mm (Paper width)
014	Paper Transfer: Plain: 2nd Side: S4	*ENG	[100 to 600 / **190** / 5%/step] 210 mm > S4 size > 148 mm (Paper width)

WWW.SERVICE-MANUAL.NET

015	Paper Transfer: 1200: 1st Side: S4	*ENG	[100 to 600 / **160** / 5%/step] 210 mm > S4 size > 148 mm (Paper width)
017	Paper Transfer: Plain 1: 1st Side: S5	*ENG	[100 to 600 / **120** / 5%/step] 148 mm > S5 size (Paper width)
018	Paper Transfer: Plain: 2nd Side: S5	*ENG	[100 to 600 / **220** / 5%/step] 148 mm > S5 size (Paper width)
019	Paper Transfer: 1200: 1st Side: S5	*ENG	[100 to 600 / **180** / 5%/step] 148 mm > S5 size (Paper width)

2521	[Thick 1: Leading Edge Correction] Thick 1 Paper: Leading Edge Correction		
	Adjusts the correction to the paper transfer roller current at the paper leading edge in each mode. SP2502 and SP2507 are multiplied by these SP values. Plain: High speed, 1200: Low speed Note ▪ The paper leading edge area can be adjusted with SP2522.		
001	Paper Transfer: Plain: 1st Side	*ENG	[0 to 400 / **100** / 5%/step]
002	Paper Transfer: Plain: 2nd Side	*ENG	
003	Paper Transfer: 1200: 1st Side	*ENG	[0 to 400 / **100** / 5%/step]
005	Separation DC: Plain: 1st Side	*ENG	[0 to 400 / **100** / 5%/step]
006	Separation DC: Plain: 2nd Side	*ENG	
007	Separation DC: 1200: 1st Side	*ENG	[0 to 400 / **100** / 5%/step]

System Maintenance

WWW.SERVICE-MANUAL.NET

2522	[Thick 1: Switch Timing: Lead. Edge]		
	Adjusts the bias/ voltage switch timing of the paper transfer roller/ discharge plate at the paper leading edge between the erase margin area and the image area. Plain: High speed, 1200: Low speed		
001	Paper Transfer: Plain 1: 1st Side	*ENG	[0 to 50 / **0** / 2 mm/step]
002	Paper Transfer: Plain: 2nd Side	*ENG	
003	Paper Transfer: 1200: 1st Side	*ENG	
005	Separation DC: Plain 1: 1st Side	*ENG	[0 to 50 / **0** / 2 mm/step]
006	Separation DC: Plain 1: 2nd Side	*ENG	
007	Separation DC: 1200: 1st Side	*ENG	

2523	[Thick 1: Trailing Edge Correction] Thick 1 Paper: Trailing Edge Correction		
	Adjusts the correction coefficient to the paper transfer roller current for the paper trailing edge in each mode. SP2502 and SP2507 are multiplied by these SP values. Plain: High speed, 1200: Low speed Note ▪ The paper trailing edge area can be adjusted with SP2524.		
001	Paper Transfer: Plain: 1st Side	*ENG	[0 to 400 / **100** / 5%/step]
002	Paper Transfer: Plain: 2nd Side	*ENG	
003	Paper Transfer: 1200: 1st Side	*ENG	
005	Paper Transfer: Plain: 1st Side	*ENG	
006	Paper Transfer: Plain: 2nd Side	*ENG	[0 to 400 / **100** / 5%/step]
007	Paper Transfer: 1200: 1st Side	*ENG	

WWW.SERVICE-MANUAL.NET

2524	[Thick 1: Switch Timing: Trail. Edge]		
	Adjusts the bias/voltage switch timing of the paper transfer roller/discharge plate at the paper trailing edge between the erase margin area and the image area. Plain: High speed, 1200: Low speed		
001	Paper Transfer: Plain: 1st Side	*ENG	[0 to 50 / **0** / 1 mm/step]
002	Paper Transfer: Plain: 2nd Side	*ENG	
003	Paper Transfer: 1200: 1st Side	*ENG	
005	Paper Transfer: Plain: 1st Side	*ENG	
006	Paper Transfer: Plain: 2nd Side	*ENG	
007	Paper Transfer: 1200: 1st Side	*ENG	

2530	[Thick 1: Environment Correction] Plain: High speed, 1200: Low speed		
001	Separation DC: Plain: 1st Side	*ENG	[1 to 60 / **22** / 1 /step]
002	Separation DC: Plain: 2nd Side	*ENG	
003	Paper Transfer: Plain: BW: 1st Side	*ENG	[1 to 60 / **11** / 1 /step]
004	Paper Transfer: Plain: BW:2nd Side	*ENG	
005	Paper Transfer: Plain: FC: 1st Side	*ENG	[1 to 60 / **1** / 1 /step]
006	Paper Transfer: Plain: FC:2nd Side	*ENG	[1 to 60 / **11** / 1 /step]
007	Separation DC: 1200: 1st Side	*ENG	[1 to 60 / **22** / 1 /step]
009	Paper Transfer: 1200: BW: 1st Side	*ENG	[1 to 60 / **11** / 1 /step]
011	Paper Transfer: 1200: FC: 1st Side	*ENG	[1 to 60 / **1** / 1 /step]

WWW.SERVICE-MANUAL.NET

2551	[Thick 2: Bias]		
	Adjusts the DC voltage of the discharge plate for thick 2 paper.		
001	Separation DC: 1st Side	*ENG	[0 to 4000 / **0** / 10 –V/step]
002	Separation DC: 2nd Side	*ENG	

2553	[Thick 2: Bias: BW]		
	Adjusts the current for the paper transfer roller for thick 2 paper in black-and-white mode.		
001	Paper Transfer: 1st Side	*ENG	[0 to 250 / **7** / 1 –μA /step]
002	Paper Transfer: 2nd Side	*ENG	[0 to 250 / **12** / 1 –μA /step]

2558	[Thick 2: Bias: FC]		
	Adjusts the current for the paper transfer roller for thick 2 paper in full color mode.		
001	Paper Transfer: 1st Side	*ENG	[0 to 250 / **16** / 1 –μA /step]
002	Paper Transfer: 2nd Side	*ENG	[0 to 250 / **15** / 1 –μA /step]

WWW.SERVICE-MANUAL.NET

2561	[Thick 2: Paper Size Correction]		
	Adjusts the size correction coefficient for the paper transfer roller current for each paper size. SP2553 and SP2558 are multiplied by these SP values.		
001	Paper Transfer: 1st Side: S1	*ENG	[100 to 600 / **100** / 5%/step] S1 size > 297 mm (Paper width)
002	Paper Transfer: 2nd Side: S1	*ENG	
003	Paper Transfer: 1st Side: S2	*ENG	[100 to 600 / **105** / 5%/step] 297 mm > S2 size > 275 mm (Paper width)
004	Paper Transfer: 2nd Side: S2	*ENG	[100 to 600 / **160** / 5%/step] 297 mm > S2 size > 275 mm (Paper width)
005	Paper Transfer: 1st Side: S3	*ENG	[100 to 600 / **110** / 5%/step] 275 mm > S3 size > 210 mm (Paper width)
006	Paper Transfer: 2nd Side: S3	*ENG	[100 to 600 / **260** / 5%/step] 275 mm > S3 size > 210 mm (Paper width)
007	Paper Transfer: 1st Side: S4	*ENG	[100 to 600 / **120** / 5%/step] 210 mm > S4 size > 148 mm (Paper width)
008	Paper Transfer: 2nd Side: S4	*ENG	[100 to 600 / **430** / 5%/step] 210 mm > S4 size > 148 mm (Paper width)
009	Paper Transfer: 1st Side: S5	*ENG	[100 to 600 / **140** / 5%/step] 148 mm > S5 size (Paper width)
010	Paper Transfer: 2nd Side: S5	*ENG	[100 to 600 / **600** / 5%/step] 148 mm > S5 size (Paper width)

WWW.SERVICE-MANUAL.NET

2571	[Thick 2: Leading Edge Correction] Thick 2 Paper: Leading Edge Correction		
	Adjusts the correction to the paper transfer roller current at the paper leading edge in each mode. SP2553 and SP2558 are multiplied by these SP values. Note ▪ The paper leading edge area can be adjusted with SP2572.		
001	Paper Transfer: 1st Side	*ENG	[0 to 400 / **100** / 5%/step]
002	Paper Transfer: 2nd Side	*ENG	
2571	Adjusts the correction to the discharge plate current at the paper leading edge in each mode. SP2551 is multiplied by these SP values. Note ▪ The paper leading edge area can be adjusted with SP2572.		
003	Separation DC: 1st Side	*ENG	[0 to 400 / **100** / 5%/step]
004	Separation DC: 2nd Side	*ENG	

2572	[Thick 2: Switch Timing: Lead. Edge]		
	Adjusts the bias/ voltage switch timing of the paper transfer roller/ discharge plate at the paper leading edge between the erase margin area and the image area.		
001	Paper Transfer: 1st Side	*ENG	[0 to 50 / **0** / 2mm/step]
002	Paper Transfer: 2nd Side	*ENG	
003	Separation DC: 1st Side	*ENG	
004	Separation DC: 2nd Side	*ENG	

WWW.SERVICE-MANUAL.NET

2573	[Thick 2: Trailing Edge Correction] Thick 2 Paper: Trailing Edge Correction		
	Adjusts the correction to the paper transfer roller current for the paper trailing edge in each mode. SP2553 and SP2558 are multiplied by these SP values. Note ▪ The paper trailing edge area can be adjusted with SP2574.		
001	Paper Transfer: 1st Side	*ENG	[0 to 400 / **100** / 5%/step]
002	Paper Transfer: 2nd Side	*ENG	
003	Separation DC: 1st Side	*ENG	[0 to 400 / **100** / 5%/step]
004	Separation DC: 2nd Side	*ENG	[0 to 400 / **100** / 5%/step]

2574	[Thick 2: Switch Trailing Edge Correction]		
	Adjusts the bias/voltage switch timing of the paper transfer roller/discharge plate at the paper trailing edge between the erase margin area and the image area.		
001	Paper Transfer: 1st Side	*ENG	[0 to 50 / **0** / 2 mm/step]
002	Paper Transfer: 2nd Side	*ENG	
003	Separation DC: 1st Side	*ENG	
004	Separation DC: 2nd Side	*ENG	

System Maintenance

WWW.SERVICE-MANUAL.NET

2580	[Thick 2 Environment Correction]		
001	Separation DC: 1st Side	*ENG	[1 to 60 / **22** / 1 /step]
002	Separation DC: 2nd Side	*ENG	
003	Paper Transfer: BW: 1st Side	*ENG	[0 to 60 / **11** / 1 /step]
004	Paper Transfer: BW: 2nd Side	*ENG	
005	Paper Transfer: FC: 1st Side	*ENG	[1 to 60 / **53** / 1 /step]
006	Paper Transfer: FC: 2nd Side	*ENG	[1 to 60 / **11** / 1 /step]

2601	[OHP: Bias]		
	Adjusts the DC voltage of the discharge plate for OHP.		
001	Separation DC	*ENG	[0 to 4000 / **0** / 10 –V/step]

WWW.SERVICE-MANUAL.NET

2603	[OHP: Bias: BW]		
	Adjusts the current for the paper transfer roller for OHP in black-and-white mode.		
001	Paper Transfer	*ENG	[0 to 250 / **12** / 1 –μA /step]

2608	[OHP: Bias: FC]		
	Adjusts the current for the paper transfer roller for OHP in full color mode.		
001	Paper Transfer	*ENG	[0 to 250 / **15** / 1 –μA /step]

2611	[OHP: Paper Size Correction]		
	Adjusts the size correction coefficient for the paper transfer roller current for each paper size. SP2603 and SP2608 are multiplied by these SP values.		
001	Paper Transfer: S1	*ENG	[100 to 600 / **100** / 5%/step] S1 size > 297 mm (Paper width)
002	Paper Transfer: S2	*ENG	[100 to 600 / **140** / 5%/step] 297 mm > S2 size > 275 mm (Paper width)
003	Paper Transfer: S3	*ENG	[100 to 600 / **200** / 5%/step] 275 mm > S3 size > 210 mm (Paper width)
004	Paper Transfer: S4	*ENG	[100 to 600 / **260** / 5%/step] 210 mm > S4 size > 148 mm (Paper width)
005	Paper Transfer: S5	*ENG	[100 to 600 / **330** / 5%/step] 148 mm > S5 size (Paper width)

WWW.SERVICE-MANUAL.NET

2621	[OHP: Leadin Edge Correction] OHP: Leading Edge Correction		
	Adjusts the correction to the paper transfer roller current at the paper leading edge in each mode. SP2603 and SP2608 are multiplied by these SP values. Note ▪ The paper leading edge area can be adjusted with SP2622.		
001	Paper Transfer	*ENG	[0 to 400 / **100** / 5%/step]
2621	Adjusts the correction to the discharge plate current at the paper leading edge in each mode. SP2601 is multiplied by these SP values. Note ▪ The paper leading edge area can be adjusted with SP2622.		
002	Separation DC	*ENG	[0 to 400 / **100** / 5%/step]

2622	[OHP: Switch Timing: Leadn. Edge]		
	Adjusts the bias/ voltage switch timing of the paper transfer roller/ discharge plate at the paper leading edge between the erase margin area and the image area.		
001	Paper Transfer	*ENG	[0 to 50 / **0** / 2 mm/step]
002	Separation DC	*ENG	

2623	[OHP: Trailing Edge Correction] OHP: Trailing Edge Correction		
	Adjusts the correction to the paper transfer roller current for the paper trailing edge in each mode. SP2603 and SP2608 are multiplied by these SP values. Note ▪ The paper trailing edge area can be adjusted with SP2624.		
001	Paper Transfer	*ENG	[0 to 400 / **100** / 5%/step]
002	Separation DC	*ENG	

WWW.SERVICE-MANUAL.NET

2624	[OHP: Trailing Edge Correction]		
	Adjusts the bias/voltage switch timing of the paper transfer roller/discharge plate at the paper trailing edge between the erase margin area and the image area.		
001	Paper Transfer	*ENG	[–100 to 0 / **0** / 1 mm/step]
002	Separation DC	*ENG	[0 to 50 / **0** / 2 mm/step]

2630	[OHP: Environment Correction]		
001	Separation DC	*ENG	[1 to 60 / **22** / 1 /step]
002	Paper Transfer: BW	*ENG	[1 to 60 / **11** / 1 /step]
003	Paper Transfer: FC	*ENG	[1 to 60 / **1** / 1 /step]

2650	[Thick3: Bias]		
	Adjusts the DC voltage of the discharge plate for thick paper 3.		
001	Separation DC: 1st Side	*ENG	[0 to 4000 / **0** / 10 –V/step]
002	Separation DC: 2nd Side	*ENG	

2651	[Thick3: Bias: BW]		
	Adjusts the current for the paper transfer roller for thick paper 3 in black-and-white mode.		
001	Paper Transfer: 1st Side	*ENG	[0 to 250 / **10** / 1 –μA /step]
002	Paper Transfer: 2nd Side	*ENG	[0 to 250 / **12** / 1 –μA /step]

System Maintenance

WWW.SERVICE-MANUAL.NET

2652	[Thick3: Bias: FC]		
	Adjusts the current for the paper transfer roller for thick paper 3 in full color mode.		
001	Paper Transfer: 1st Side	*ENG	[0 to 250 / **11** / 1 –μA /step]
002	Paper Transfer: 2nd Side	*ENG	[0 to 250 / **15** / 1 –μA /step]

2653	[Thick3: Paper Size Correction]		
	Adjusts the size correction coefficient for the paper transfer roller current for each paper size. SP2651 and SP2652 are multiplied by these SP values.		
001	Paper Transfer: 1st Side: S1	*ENG	[100 to 600 / **100** / 5%/step] S1 size > 297 mm (Paper width)
002	Paper Transfer: 1st Side: S2	*ENG	[100 to 600 / **100** / 5%/step] 297 mm > S2 size > 275 mm (Paper width)
003	Paper Transfer: 1st Side: S3	*ENG	[100 to 600 / **100** / 5%/step] 275 mm > S3 size > 210 mm (Paper width)
004	Paper Transfer: 1st Side: S4	*ENG	[100 to 600 / **160** / 5%/step] 210 mm > S4 size > 148 mm (Paper width)
005	Paper Transfer: 1st Side: S5	*ENG	[100 to 600 / **100** / 5%/step] 148 mm > S5 size (Paper width)
006	Paper Transfer: 2nd Side: S1	*ENG	[100 to 600 / **260** / 5%/step] S1 size > 297 mm (Paper width)

WWW.SERVICE-MANUAL.NET

007	Paper Transfer: 2nd Side: S2	*ENG	[100 to 600 / **100** / 5%/step] 297 mm > S2 size > 275 mm (Paper width)
008	Paper Transfer: 2nd Side: S3	*ENG	[100 to 600 / **430** / 5%/step] 275 mm > S3 size > 210 mm (Paper width)
009	Paper Transfer: 2nd Side: S4	*ENG	[100 to 600 / **100** / 5%/step] 210 mm > S4 size > 148 mm (Paper width)
010	Paper Transfer: 2nd Side: S3	*ENG	[100 to 600 / **600** / 5%/step] 148 mm > S5 size (Paper width)

2654	[Thick 3: Leading Edge Correction] Thick 3 Paper: Leading Edge Correction		
	Adjusts the correction to the paper transfer roller current at the paper leading edge in each mode. SP2651 and SP2652 are multiplied by these SP values. Note ▪ The paper leading edge area can be adjusted with SP2655.		
001	Paper Transfer: 1st Side	*ENG	[0 to 400 / **100** / 5%/step]
002	Separation DC: 1st Side	*ENG	
2654	Adjusts the correction to the discharge plate current at the paper leading edge in each mode. SP2650 is multiplied by these SP values. Note ▪ The paper leading edge area can be adjusted with SP2655.		
003	Paper Transfer: 2nd Side	*ENG	[0 to 400 / **100** / 5%/step]
004	Separation DC: 2nd Side	*ENG	

System Maintenance

WWW.SERVICE-MANUAL.NET

2655	[Thick 3: Switch Timing: Lead. Edge]		
	Adjusts the bias/ voltage switch timing of the paper transfer roller/ discharge plate at the paper leading edge between the erase margin area and the image area.		
001	Paper Transfer: 1st Side	*ENG	[0 to 50 / **0** / 2 mm/step]
002	Separation DC: 1st Side	*ENG	
003	Paper Transfer: 2nd Side	*ENG	
004	Separation DC: 2nd Side	*ENG	

2656	[Thick 3: Trailing Edge Correction] Thick 3 Paper: Trailing Edge Correction		
	Adjusts the correction to the paper transfer roller current for the paper trailing edge in each mode. SP2651 and SP2652 are multiplied by these SP values. Note ▪ The paper trailing edge area can be adjusted with SP2657.		
001	Paper Transfer: 1st Side	*ENG	[0 to 400 / **100** / 5%/step]
002	Paper Transfer: 2nd Side	*ENG	
003	Separation DC: 1st Side	*ENG	
004	Separation DC: 2nd Side	*ENG	

2657	[Thick 3: Trailing Edge Correction]		
	Adjusts the bias/voltage switch timing of the paper transfer roller/discharge plate at the paper trailing edge between the erase margin area and the image area.		
001	Paper Transfer: 1st Side	*ENG	[0 to 50 / **0** / 2 mm/step]
002	Paper Transfer: 2nd Side	*ENG	
003	Separation DC: 1st Side	*ENG	
004	Separation DC: 2nd Side	*ENG	

WWW.SERVICE-MANUAL.NET

2660	[Thick 3: Environment Correction] Thick 3 Paper: MM Environment Coefficient Adjustment		
	Adjusts the environment coefficient for each mode. When the environment is detected as MM, SP2651 and SP2652 are multiplied by these SP values.		
001	Separation DC: 1st Side	*ENG	[1 to 60 / **22** / 1 /step]
002	Separation DC: 2nd Side	*ENG	
	Adjusts the environment coefficient for each mode. When the environment is detected as MM, SP2650 is multiplied by these SP values.		
003	Paper Transfer: BW: 1st Side	*ENG	[1 to 60 / **11** / 1 /step]
004	Paper Transfer: BW: 2nd Side	*ENG	
005	Paper Transfer: FC: 1st Side	*ENG	[1 to 60 / **55** / 1 /step]
006	Paper Transfer: FC: 2st Side	*ENG	[1 to 60 / **11** / 1 /step]

2670	[Thick4: Bias]		
	Adjusts the DC voltage of the discharge plate for thick paper 4.		
001	Separation DC: 1st Side	*ENG	[0 to 4000 / **0** / 10 –V/step]
002	Separation DC: 2nd Side	*ENG	

2671	[Thick4: Bias: BW]		
	Adjusts the current for the paper transfer roller for thick paper 4 in black-and-white mode.		
001	Paper Transfer: 1st Side	*ENG	[0 to 250 / **10** / 1 –μA /step]
002	Paper Transfer: 2nd Side	*ENG	[0 to 250 / **11** / 1 –μA /step]

System Maintenance

WWW.SERVICE-MANUAL.NET

2672	[Thick4: Bias: FC]		
	Adjusts the current for the paper transfer roller for thick paper 4 in full color mode.		
001	Paper Transfer: 1st Side	*ENG	[0 to 250 / **11** / 1 –μA /step]
002	Paper Transfer: 2nd Side	*ENG	[0 to 250 / **15** / 1 –μA /step]

2673	[Thick4: Paper Size Correction]		
	Adjusts the size correction coefficient for the paper transfer roller current for each paper size. SP2671 and SP2672 are multiplied by these SP values.		
001	Paper Transfer: 1st Side: S1	*ENG	[100 to 600 / **100** / 5%/step] S1 size > 297 mm (Paper width)
002	Paper Transfer: 1st Side: S2	*ENG	[100 to 600 / **100** / 5%/step] 297 mm > S2 size > 275 mm (Paper width)
003	Paper Transfer: 1st Side: S3	*ENG	[100 to 600 / **100** / 5%/step] 275 mm > S3 size > 210 mm (Paper width)
004	Paper Transfer: 1st Side: S4	*ENG	[100 to 600 / **160** / 5%/step] 210 mm > S4 size > 148 mm (Paper width)

WWW.SERVICE-MANUAL.NET

005	Paper Transfer: 1st Side: S5	*ENG	[100 to 600 / **100** / 5%/step] 148 mm > S5 size (Paper width)
006	Paper Transfer: 2nd Side: S1	*ENG	[100 to 600 / **260** / 5%/step] S1 size > 297 mm (Paper width)
007	Paper Transfer: 2nd Side: S2	*ENG	[100 to 600 / **100** / 5%/step] 297 mm > S2 size > 275 mm (Paper width)
008	Paper Transfer: 2nd Side: S3	*ENG	[100 to 600 / **430** / 5%/step] 275 mm > S3 size > 210 mm (Paper width)
009	Paper Transfer: 2nd Side: S4	*ENG	[100 to 600 / **100** / 5%/step] 210 mm > S4 size > 148 mm (Paper width)
010	Paper Transfer: 2nd Side: S3	*ENG	[100 to 600 / **600** / 5%/step] 148 mm > S5 size (Paper width)

WWW.SERVICE-MANUAL.NET

2674	[Thick 4: Leading Edge Correction] Thick 4 Paper: Leading Edge Correction		
	Adjusts the correction to the paper transfer roller current at the paper leading edge in each mode. SP2671 and SP2672 are multiplied by these SP values. Note ▪ The paper leading edge area can be adjusted with SP2675.		
001	Paper Transfer: 1st Side	*ENG	[0 to 400 / **100** / 5%/step]
002	Separation DC: 1st Side	*ENG	
2674	Adjusts the correction to the discharge plate current at the paper leading edge in each mode. SP2670 is multiplied by these SP values. Note ▪ The paper leading edge area can be adjusted with SP2655.		
003	Paper Transfer: 2nd Side	*ENG	[0 to 400 / **100** / 5%/step]
004	Separation DC: 2nd Side	*ENG	

2675	[Thick 4: Switch Timing: Lead. Edge]		
	Adjusts the bias/ voltage switch timing of the paper transfer roller/ discharge plate at the paper leading edge between the erase margin area and the image area.		
001	Paper Transfer: 1st Side	*ENG	[0 to 50 / **0** / 2 mm/step]
002	Separation DC: 1st Side	*ENG	
003	Paper Transfer: 2nd Side	*ENG	
004	Separation DC: 2nd Side	*ENG	

WWW.SERVICE-MANUAL.NET

2676	[Thick 4: Trailing Edge Correction] Thick 4 Paper: Trailing Edge Correction		
	Adjusts the correction to the paper transfer roller current for the paper trailing edge in each mode. SP2671 and SP2672 are multiplied by these SP values. Note ▪ The paper trailing edge area can be adjusted with SP2677.		
001	Paper Transfer: 1st Side	*ENG	[0 to 400 / **100** / 5%/step]
002	Paper Transfer: 2nd Side	*ENG	
003	Separation DC: 1st Side	*ENG	
004	Separation DC: 2nd Side	*ENG	

2677	[Thick 4: Trailing Edge Correction]		
	Adjusts the bias/voltage switch timing of the paper transfer roller/discharge plate at the paper trailing edge between the erase margin area and the image area.		
001	Paper Transfer: 1st Side	*ENG	[0 to 50 / **0** / 2 mm/step]
002	Paper Transfer: 2nd Side	*ENG	
003	Separation DC: 1st Side	*ENG	
004	Separation DC: 2nd Side	*ENG	

System Maintenance

WWW.SERVICE-MANUAL.NET

2680	[Thick 4: Environment Correction] Thick 4 Paper: MM Environment Coefficient Adjustment		
	Adjusts the environment coefficient for each mode. When the environment is detected as MM, SP2671 and SP2672 are multiplied by these SP values.		
001	Separation DC: 1st Side	*ENG	[1 to 60 / **22** / 1 /step]
002	Separation DC: 2nd Side	*ENG	
	Adjusts the environment coefficient for each mode. When the environment is detected as MM, SP2670 is multiplied by these SP values.		
003	Paper Transfer: BW: 1st Side	*ENG	[1 to 60 / **11** / 1 /step]
004	Paper Transfer: BW: 2nd Side:	*ENG	
005	Paper Transfer: FC: 1st Side	*ENG	[1 to 60 / **55** / 1 /step]
006	Paper Transfer: FC: 2st Side	*ENG	[1 to 60 / **11** / 1 /step]

2751	[Special1: Bias]		
	Adjusts the DC voltage of the discharge plate for special paper 1. Plain: High speed, Thick 1: Middle speed		
001	Separation DC: Plain: 1st Side	*ENG	[0 to 4000 / **0** / 10 –V/step]
002	Separation DC: Plain: 2nd Side	*ENG	
003	Paper Transfer: Thick 1: 1st Side	*ENG	

WWW.SERVICE-MANUAL.NET

2753	[Special1: Bias: BW]		
	Adjusts the current for the paper transfer roller for special paper 1 in black-and-white mode. Plain: High speed		
001	Paper Transfer: Plain: 1st Side	*ENG	[0 to 250 / **C2.5c: 30, C2.5d: 38** / 1 –μA /step]
002	Paper Transfer: Plain: 2nd Side	*ENG	
003	Paper Transfer: Plain: 1st Side	*ENG	[0 to 250 / **11** / 1 –μA /step]

2757	[Special1: Bias: FC]		
	Adjusts the current for the paper transfer roller for special paper 1 in full color mode. Plain: High speed, Fine: Low speed		
001	Paper Transfer: Plain: 1st Side	*ENG	[0 to 250 / **C2.5c: 40, C2.5d: 50** / 1 –μA /step]
002	Paper Transfer: Plain: 2nd Side	*ENG	[0 to 250 / **C2.5c: 45, C2.5d: 55** / 1 –μA /step]
003	Paper Transfer: Plain: 1st Side	*ENG	[0 to 250 / **15** / 1 –μA /step]

WWW.SERVICE-MANUAL.NET

2761	[Special1: Paper Size Correction]		
	Adjusts the size correction coefficient for the paper transfer roller current for each paper size. SP2753 and SP2757 are multiplied by these SP values.		
001	Paper Transfer: 1st Side: S1	*ENG	[100 to 600 / **100** / 5%/step] S1 size > 297 mm (Paper width)
002	Paper Transfer: 2nd Side: S1	*ENG	
005	Paper Transfer: 1st Side: S2	*ENG	[100 to 600 / **120** / 5%/step] 297 mm > S2 size > 275 mm (Paper width)
006	Paper Transfer: 2nd Side: S2	*ENG	
009	Paper Transfer: 1st Side: S3	*ENG	[100 to 600 / **140** / 5%/step] 275 mm > S3 size > 210 mm (Paper width)
010	Paper Transfer: 2nd Side: S3	*ENG	
013	Paper Transfer: 1st Side: S4	*ENG	[100 to 600 / **160** / 5%/step] 210 mm > S4 size > 148 mm (Paper width)
014	Paper Transfer: 2nd Side: S4	*ENG	[100 to 600 / **160** / 5%/step] 210 mm > S4 size > 148 mm (Paper width)
017	Paper Transfer: 1st Side: S5	*ENG	[100 to 600 / **180** / 5%/step] 148 mm > S5 size (Paper width)
018	Paper Transfer: 2nd Side: S5	*ENG	[100 to 600 / **180** / 5%/step] 148 mm > S5 size (Paper width)

WWW.SERVICE-MANUAL.NET

2771	[Special 1: Leading Edge Correction] Special 1 Paper: Leading Edge Correction		
	Adjusts the correction to the paper transfer roller current at the paper leading edge in each mode. SP2753 and SP2757 are multiplied by these SP values. Plain: High speed, 1200: Low speed Note ▪ The paper leading edge area can be adjusted with SP2772.		
001	Paper Transfer: Plain: 1st Side	*ENG	[0 to 400 / **100** / 5%/step]
002	Paper Transfer: Plain: 2nd Side	*ENG	[0 to 400 / **100** / 5%/step]
003	Paper Transfer: 1200: 1st Side	*ENG	[0 to 400 / **100** / 5%/step]
2771	Adjusts the correction to the discharge plate current at the paper leading edge in each mode. SP2751 is multiplied by these SP values. Note ▪ The paper leading edge area can be adjusted with SP2772.		
005	Separation DC: Plain: 1st Side	*ENG	[0 to 400 / **100** / 5%/step]
006	Separation DC: Plain: 2nd Side	*ENG	
007	Separation DC: 1200: 1st Side	*ENG	[0 to 400 / **100** / 5%/step]

System Maintenance

WWW.SERVICE-MANUAL.NET

2772	[Special 1: Switch Timing: Lead. Edge]		
	Adjusts the bias/ voltage switch timing of the paper transfer roller/ discharge plate at the paper leading edge between the erase margin area and the image area. Plain: High speed, 1200: Low speed		
001	Paper Transfer: Plain: 1st Side	*ENG	[0 to 50 / **0** / 2 mm/step]
002	Paper Transfer: Plain: 2nd Side	*ENG	
003	Paper Transfer: 1200: 1st Side	*ENG	[0 to 50 / **0** / 1 mm/step]
005	Separation DC: Plain: 1st Side	*ENG	[0 to 50 / **0** / 2 mm/step]
006	Separation DC: Plain: 2nd Side	*ENG	
007	Separation DC: 1200: 1st Side	*ENG	

2773	[Special 1: Trailing Edge Correction] Special 1 Paper: Trailing Edge Correction		
	Adjusts the correction to the paper transfer roller current for the paper trailing edge in each mode. SP2753 and SP2757 are multiplied by these SP values. Plain: High speed, 1200: Low speed Note ▪ The paper trailing edge area can be adjusted with SP2774.		
001	Paper Transfer: Plain: 1st Side	*ENG	[0 to 400 / **100** / 5%/step]
002	Paper Transfer: Plain: 2nd Side	*ENG	
003	Paper Transfer: 1200: 1st Side	*ENG	
005	Separation DC: Plain: 1st Side	*ENG	
006	Separation DC: Plain: 2nd Side	*ENG	
007	Separation DC: 1200: 1st Side	*ENG	

WWW.SERVICE-MANUAL.NET

2774	[Special 1: Switch Timing: Trail. Edge]		
	Adjusts the bias/voltage switch timing of the paper transfer roller/discharge plate at the paper trailing edge between the erase margin area and the image area. Plain: High speed, 1200: Low speed		
001	Paper Transfer: Plain: 1st Side	*ENG	[0 to 50 / **0** / 2 mm/step]
002	Paper Transfer: Plain: 2nd Side	*ENG	
003	Paper Transfer: 1200: 1st Side	*ENG	
005	Separation DC: Plain: 1st Side	*ENG	
006	Separation DC: Plain: 2nd Side	*ENG	
007	Separation DC: 1200: 1st Side	*ENG	

2780	[Special 1: Environment Correction] Plain: High speed, 1200: Low speed		
001	Separation DC: Plain: 1st Side	*ENG	[1 to 60 / **26** / 1 /step]
002	Separation DC: Plain: 2nd Side	*ENG	[1 to 60 / **32** / 1 /step]
003	Paper Transfer: Plain: BW: 1st Side	*ENG	[1 to 60 / **11** / 1 /step]
004	Paper Transfer: Plain: BW:2nd Side	*ENG	
005	Paper Transfer: Plain: FC: 1st Side	*ENG	[1 to 60 / **1** / 1 /step]
006	Paper Transfer: Plain: FC:2nd Side	*ENG	[1 to 60 / **14** / 1 /step]
007	Separation DC: 1200: 1st Side	*ENG	[1 to 60 / **26** / 1 /step]
009	Paper Transfer: 1200: BW: 1st Side	*ENG	[1 to 60 / **11** / 1 /step]
011	Paper Transfer: 1200: FC: 1st Side	*ENG	[1 to 60 / **1** / 1 /step]

WWW.SERVICE-MANUAL.NET

2801	[Special2: Bias]		
	Adjusts the DC voltage of the discharge plate for special paper 2. Plain: High speed, 1200: Low speed		
001	Separation DC: Plain: 1st Side	*ENG	[0 to 4000 / **0** / 10 –V/step]
002	Separation DC: Plain: 2nd Side	*ENG	
003	Separation DC: 1200: 1st Side	*ENG	

2803	[Special2: Bias: BW]		
	Adjusts the current for the paper transfer roller for special paper 2 in black-and-white mode. Plain: High speed, 1200: Low speed		
001	Paper Transfer: Plain: 1st Side	*ENG	[0 to 250 / **C2.5c: 30/ C2.5d: 38** / 1 –μA /step]
002	Paper Transfer: Plain: 2nd Side	*ENG	
003	Separation DC: 1200: 1st Side	*ENG	[0 to 200 / **11** / 1 –μA /step]

2807	[Special2: Bias: FC]		
	Adjusts the current for the paper transfer roller for special paper 2 in full color mode. Plain: High speed, Thick 2&Fine: Low speed		
001	Paper Transfer: Plain: 1st Side	*ENG	[0 to 250 / **C2.5c: 40/ C2.5d: 50** / 1 –μA /step]
002	Paper Transfer: Plain: 2nd Side	*ENG	[0 to 250 / **C2.5c: 45/ C2.5d: 55** / 1 –μA /step]
003	Separation DC: 1200: 1st Side	*ENG	[0 to 250 / **15** / 1 –μA /step]

WWW.SERVICE-MANUAL.NET

2811	[Special2: Paper Size Correction]		
	Adjusts the size correction coefficient for the paper transfer roller current for each paper size. SP2803 and SP2807 are multiplied by these SP values.		
001	Paper Transfer: 1st Side: S1	*ENG	[100 to 600 / **100** / 5%/step] S1 size > 297 mm (Paper width)
002	Paper Transfer: 2nd Side: S1	*ENG	
005	Paper Transfer: 1st Side: S2	*ENG	[100 to 600 / **120** / 5%/step] 297 mm > S2 size > 275 mm (Paper width)
006	Paper Transfer: 2nd Side: S2	*ENG	[100 to 600 / **120** / 5%/step] 297 mm > S2 size > 275 mm (Paper width)
009	Paper Transfer: 1st Side: S3	*ENG	[100 to 600 / **140** / 5%/step] 275 mm > S3 size > 210 mm (Paper width)
010	Paper Transfer: 2nd Side: S3	*ENG	[100 to 600 / **140** / 5%/step] 275 mm > S3 size > 210 mm (Paper width)
013	Paper Transfer: 1st Side: S4	*ENG	[100 to 600 / **160** / 5%/step] 210 mm > S4 size > 148 mm (Paper width)
014	Paper Transfer: 2nd Side: S4	*ENG	[100 to 600 / **160** / 5%/step] 210 mm > S4 size > 148 mm (Paper width)
017	Paper Transfer: 1st Side: S5	*ENG	[100 to 600 / **180** / 5%/step] 148 mm > S5 size (Paper width)
018	Paper Transfer: 2nd Side: S5	*ENG	[100 to 600 / **180** / 5%/step] 148 mm > S5 size (Paper width)

WWW.SERVICE-MANUAL.NET

2821	[Special 2: Leading Edge Correction] Special 2 Paper: Leading Edge Correction		
	Adjusts the correction to the paper transfer roller current at the paper leading edge in each mode. SP2803 and SP2807 are multiplied by these SP values. Plain: High speed, 1200: Low speed Note ▪ The paper leading edge area can be adjusted with SP2822.		
001	Paper Transfer: Plain: 1st Side	*ENG	[0 to 400 / **100** / 5%/step]
002	Paper Transfer: Plain: 2nd Side	*ENG	[0 to 400 / **100** / 5%/step]
003	Paper Transfer: 1200: 1st Side	*ENG	[0 to 400 / **100** / 5%/step]
2821	Adjusts the correction to the discharge plate current at the paper leading edge in each mode. SP2801 is multiplied by these SP values. Note ▪ The paper leading edge area can be adjusted with SP2822.		
005	Separation DC: Plain: 1st Side	*ENG	[0 to 400 / **100** / 5%/step]
006	Separation DC: Plain: 2nd Side	*ENG	
007	Separation DC: 12001st Side	*ENG	

WWW.SERVICE-MANUAL.NET

2822	[Special 2: Switch Timing: Lead. Edge]		
	Adjusts the bias/ voltage switch timing of the paper transfer roller/ discharge plate at the paper leading edge between the erase margin area and the image area. Plain: High speed, 1200: Low speed		
001	Paper Transfer: Plain: 1st Side	*ENG	[0 to 50 / **0** / 2 mm/step]
002	Paper Transfer: Plain: 2nd Side	*ENG	
003	Paper Transfer: 1200: 1st Side	*ENG	
005	Separation DC: Plain: 1st Side	*ENG	
006	Separation DC: Plain: 2nd Side	*ENG	
007	Separation DC: 1200: 1st Side	*ENG	

2823	[Special 2: Trailing Edge Correction] Special 2 Paper: Trailing Edge Correction		
	Adjusts the correction to the paper transfer roller current for the paper trailing edge in each mode. SP2803 and SP2807 are multiplied by these SP values. Plain: High speed, 1200: Low speed Note ▪ The paper trailing edge area can be adjusted with SP2824.		
001	Paper Transfer: Plain: 1st Side	*ENG	[0 to 400 / **100** / 5%/step]
002	Paper Transfer: Plain: 2nd Side	*ENG	
003	Paper Transfer: 1200: 1st Side	*ENG	
005	Separation DC: Plain: 1st Side	*ENG	
006	Separation DC: Plain: 2nd Side	*ENG	
007	Separation DC: 1200: 1st Side	*ENG	

System Maintenance

WWW.SERVICE-MANUAL.NET

2824	[Special 2: Switch Timing: Trail. Edge]		
	Adjusts the bias/voltage switch timing of the paper transfer roller/discharge plate at the paper trailing edge between the erase margin area and the image area. Plain: High speed, 1200: Low speed		
001	Paper Transfer: Plain: 1st Side	*ENG	[0 to 50 / **0** / 2 mm/step]
002	Paper Transfer: Plain: 2nd Side	*ENG	
003	Paper Transfer: 1200: 1st Side	*ENG	
005	Separation DC: Plain: 1st Side	*ENG	
006	Separation DC: Plain: 2nd Side	*ENG	
007	Separation DC: 1200: 1st Side	*ENG	

2830	[Special 2: Environment Correction] Plain: High speed, 1200: Low speed		
001	Paper Transfer: Plain: 1st Side	*ENG	[1 to 60 / **26** / 1 /step]
002	Paper Transfer: Plain: 2nd Side	*ENG	[1 to 60 / **32** / 1 /step]
003	Paper Transfer: Plain: BW: 1st Side	*ENG	[1 to 60 / **1** / 1 /step]
004	Paper Transfer: Plain: BW:2nd Side	*ENG	[1 to 60 / **11** / 1 /step]
005	Paper Transfer: Plain: FC: 1st Side	*ENG	[1 to 60 / **1** / 1 /step]
006	Paper Transfer: Plain: FC:2nd Side	*ENG	[1 to 60 / **14** / 1 /step]
007	Paper Transfer: 1200: 1st Side	*ENG	[1 to 60 / **26** / 1 /step]
009	Paper Transfer: 1200: BW: 1st Side	*ENG	[1 to 60 / **11** / 1 /step]
011	Paper Transfer: 1200: FC: 1st Side	*ENG	[1 to 60 / **1** / 1 /step]

WWW.SERVICE-MANUAL.NET

2851	[Special 3: Bias]		
	Adjusts the DC voltage of the discharge plate for special paper 3. Plain: High speed, 1200: Low speed		
001	Separation DC: Plain: 1st Side	*ENG	[0 to 4000 / **0** / 10 –V/step]
002	Separation DC: Plain: 2nd Side	*ENG	
003	Separation DC: 1200: 1st Side	*ENG	

2852	[Special 3: Bias: BW]		
	Adjusts the current for the paper transfer roller for special paper 3 in black-and-white mode. Plain: High speed, 1200: Low speed		
001	Paper Transfer: Plain: 1st Side	*ENG	[0 to 250 / **C2.5c: 30/ C2.5d: 38** / 1 –μA /step]
002	Paper Transfer: Plain: 2nd Side	*ENG	
003	Paper Transfer: 1200: 1st Side	*ENG	[0 to 250 / **11** / 1 –μA /step]

2857	[Special 3: Bias: FC]		
	Adjusts the current for the paper transfer roller for special paper 3 in full color mode. Plain: High speed, 1200: Low speed		
001	Paper Transfer: Plain: 1st Side	*ENG	[0 to 250 / **C2.5c: 40/ C2.5d: 50** / 1 –μA /step]
002	Paper Transfer: Plain: 2nd Side	*ENG	[0 to 250 / **C2.5c: 45/ C2.5d: 55** / 1 –μA /step]
003	Paper Transfer: 1200: 1st Side	*ENG	[0 to 250 / **15** / 1 –μA /step]

System Maintenance

WWW.SERVICE-MANUAL.NET

2861	[Special 3: Paper Size Correction]		
	Adjusts the size correction coefficient for the paper transfer roller current for each paper size. SP2852 and SP2857 are multiplied by these SP values.		
001	Paper Transfer: 1st Side: S1	*ENG	[100 to 600 / **100** / 5%/step] S1 size > 297 mm (Paper width)
002	Paper Transfer: 2nd Side: S1	*ENG	
005	Paper Transfer: 1st Side: S2	*ENG	[100 to 600 / **120** / 5%/step] 297 mm > S2 size > 275 mm (Paper width)
006	Paper Transfer: 2nd Side: S2	*ENG	[100 to 600 / **120** / 5%/step] 297 mm > S2 size > 275 mm (Paper width)
009	Paper Transfer: 1st Side: S3	*ENG	[100 to 600 / **140** / 5%/step] 275 mm > S3 size > 210 mm (Paper width)
010	Paper Transfer: 2nd Side: S3	*ENG	[100 to 600 / **140** / 5%/step] 275 mm > S3 size > 210 mm (Paper width)
013	Paper Transfer: 1st Side: S4	*ENG	[100 to 600 / **160** / 5%/step] 210 mm > S4 size > 148 mm (Paper width)
014	Paper Transfer:: 2nd Side: S4	*ENG	[100 to 600 / **160** / 5%/step] 210 mm > S4 size > 148 mm (Paper width)

WWW.SERVICE-MANUAL.NET

017	Paper Transfer:: 1st Side: S5	*ENG	[100 to 600 / **180** / 5%/step] 148 mm > S5 size (Paper width)
018	Paper Transfer:: 2nd Side: S5	*ENG	[100 to 600 / **180** / 5%/step] 148 mm > S5 size (Paper width)

2871	[Special 3: Leading Edge Correction] Special 3 Paper: Leading Edge Correction		
	Adjusts the correction to the paper transfer roller current at the paper leading edge in each mode. SP2852 and SP2857 are multiplied by these SP values. Plain: High speed, 1200: Low speed Note ▪ The paper leading edge area can be adjusted with SP2872.		
001	Paper Transfer: Plain: 1st Side	*ENG	[0 to 400 / **100** / 5%/step]
002	Paper Transfer: Plain: 2nd Side	*ENG	
003	Paper Transfer: 1200: 1st Side	*ENG	
2871	Adjusts the correction to the discharge plate current at the paper leading edge in each mode. SP2851 is multiplied by these SP values. Note ▪ The paper leading edge area can be adjusted with SP2872.		
005	Separation DC: Plain: 1st Side	*ENG	[0 to 400 / **100** / 5%/step]
006	Separation DC: Plain: 2nd Side	*ENG	
007	Separation DC: 1200: 1st Side	*ENG	

System Maintenance

WWW.SERVICE-MANUAL.NET

2872	[Special 3: Switch Timing: Lead. Edge]		
	Adjusts the bias/ voltage switch timing of the paper transfer roller/ discharge plate at the paper leading edge between the erase margin area and the image area. Plain: High speed, 1200: Low speed		
001	Paper Transfer: Plain: 1st Side	*ENG	[0 to 50 / **0** / 2 mm/step]
002	Paper Transfer: Plain: 2nd Side	*ENG	
003	Paper Transfer: 1200: 1st Side	*ENG	
005	Separation DC: Plain: 1st Side	*ENG	
006	Separation DC: Plain: 2nd Side	*ENG	
007	Separation DC: 1200: 1st Page	*ENG	

2873	[Special 3: Trailing Edge Correction] Special 3 Paper: Trailing Edge Correction		
	Adjusts the correction to the paper transfer roller current for the paper trailing edge in each mode. SP2852 and SP2857 are multiplied by these SP values. Plain: High speed, 1200: Low speed Note ▪ The paper trailing edge area can be adjusted with SP2874.		
001	Paper Transfer: Plain: 1st Side	*ENG	[0 to 400 / **100** / 5%/step]
002	Paper Transfer: Plain: 2nd Side	*ENG	
003	Paper Transfer: 1200: 1st Side	*ENG	
005	Separation DC: Plain: 1st Side	*ENG	
006	Separation DC: Plain: 2nd Side	*ENG	
007	Separation DC: 1200: 1st Page	*ENG	

WWW.SERVICE-MANUAL.NET

2874	[Special 3: Switch Timing: Trail. Edge]		
	Adjusts the bias/voltage switch timing of the paper transfer roller/discharge plate at the paper trailing edge between the erase margin area and the image area. Plain: High speed, 1200: Low speed		
001	Paper Transfer: Plain: 1st Side	*ENG	[0 to 50 / **0** / 2 mm/step]
002	Paper Transfer: Plain: 2nd Side	*ENG	
003	Paper Transfer: 1200: 1st Side	*ENG	
005	Separation DC: Plain: 1st Side	*ENG	
006	Separation DC: Plain: 2nd Side	*ENG	
007	Separation DC: 1200: 1st Page	*ENG	

2880	[Special 3: Environment Correction] Plain: High speed, 1200: Low speed		
001	Separation DC: Plain: 1st Side	*ENG	[1 to 60 / **26** / 1 /step]
002	Separation DC: Plain: 2nd Side	*ENG	[1 to 60 / **32** / 1 /step]
003	Paper Transfer: Plain: BW: 1st Side	*ENG	[1 to 60 / **11** / 1 /step]
004	Paper Transfer: Plain: BW:2nd Side	*ENG	
005	Paper Transfer: Plain: FC: 1st Side	*ENG	[1 to 60 / **11** / 1 /step]
006	Paper Transfer: Plain: FC:2nd Side	*ENG	
007	Separation DC: 1200: 1st Side	*ENG	[1 to 60 / **26** / 1 /step]
009	Paper Transfer: 1200: BW: 1st Side	*ENG	[1 to 60 / **11** / 1 /step]
011	Paper Transfer: 1200: FC: 1st Side	*ENG	[1 to 60 / **1** / 1 /step]

WWW.SERVICE-MANUAL.NET

2905	[Dev Rvs Time] Development Roller Reverse Time		
	Specified the time of the development roller reverse rotation after the development unit has stopped. The reverse rotation of the development roller is used for removing dust from the development roller.		
001	K	*ENG	[0 to 200 / **80** / 10 msec/step]
002	M	*ENG	
003	C	*ENG	
004	Y	*ENG	
005	[Dev Rvs Threshold Counter]		
	All	*ENG	[0 to 400000 / **4000**/ 10 mm/step]
	Specified the threshold distance for the development roller reverse mode. This sp refers to the counters for SP2905-006 to -009.		
	[Dev Rvs Counter]		
006	K	*ENG	[0 to 999999999 / - / 1 mm/step]
007	M	*ENG	
008	C	*ENG	
009	Y	*ENG	

2907	[ACS Setting (FC to Bk)]		
	Adjusts the threshold for moving away the image transfer belt from the color PCDUs. This SP moves the image transfer belt away from the color PCDUs when the number of B/W image printouts reaches the number of sheets specified with this SP after consecutive full color image printouts in the full color mode. If this SP is set to "0", the image transfer belt does not move away.		
001	Continuous Bk Pages	*ENG	[0 to 10 / **0** / 1 sheet/step]

WWW.SERVICE-MANUAL.NET

2920	[Transfer Motor Control]		
001	0: Encorder 1 :FG	*ENG	[0 or 1 / **0** / 1 /step]
	Selects the speed control mode for the ITB. If SC443 occurs and machine does not recover, change this setting to "1".		
002	SC443 Count	*ENG	[0 to 3 / **0** / 1 /step]
	Displays the number of the ITB encodre error. SC443 is displayed if this counter counts to "3".		

2930	[SecondaryFB: Threshold] Paper Transfer Roller Feed-back: Threshold Adjustment		
	Adjusts the threshold between high resistance (division 1) and low resistance (division 2) at the paper transfer roller. This SP affects SP2931 to SP2939.		
001	Voltage	*ENG	[0 to 7000 / **6000** / 10 –V/step]

2960	[Process Interval]		
001	Additional Time	*ENG	[0 to 10 / **0** / 1 sec/step]
	Adjusts the additional time for ending the machine's process.		

2970	[Cleaning After JOB]		
001	No Refresh	*ENG	[0 to 100 / **50** / 1 /step] 0: No cleaning
	Specifies the threshold sheets for the cleaning of the paper transfer roller without the refresh mode.		
002	Refresh	*ENG	[0 or 1 / **1** / 1 /step] 0: No cleaning, 1: Cleaning

System Maintenance

WWW.SERVICE-MANUAL.NET

2971	T1 Non Image Area ON Timing		
001	Standard Speed	*ENG	[–300 to 260 / **C2.5c: 10** / 10 msec/step] [–240 to 240 / **C2.5d: 30** / 10 msec/step]
	Adjusts the timing for the non-image area bias of the image transfer roller.		
002	Medium Speed	*ENG	[–400 to 290 / **0** / 10 msec/step]
003	Low Speed	*ENG	[–790 to 410 / **0** / 10 msec/step]

2972	B/W Image Request Timing		
001	Standard Speed	*ENG	[0 to 4000 / **0** / 10 msec/step]
002	Medium Speed	*ENG	[0 to 4000 / **0** / 10 msec/step]
003	Low Speed	*ENG	[0 to 4000 / **0** / 10 msec/step]

2973	Forced Process Down Threshold		
001	-	*ENG	[0 to 5000 / **0** / 10 page/step]

2974	OPC PreCharge Time Control		
001	Standard Speed	*ENG	[0 to 940 / **0** / 10 msec/step]
002	Medium Speed	*ENG	[0 to 940 / **0** / 10 msec/step]
003	Low Speed	*ENG	[0 to 940 / **0** / 10 msec/step]

WWW.SERVICE-MANUAL.NET

2980	-		
001	Continuous Job Page	*ENG	[0 to 300 / **100** / 10 page/step]
002	OPC Drum Idling Time BW	*ENG	[0 to 600 / **30** / 10 sec/step]
003	OPC Drum Idling Time FC	*ENG	[0 to 600 / **30** / 10 sec/step]

2990	Print Duty Control		
001	Duty Control State	*ENG	[0 or 1 / **0** / 1 /step] 0: No limit, 1: Limit
002	Duty Control Thresh Time	*ENG	[0 to 195 / **100** / 10 min./step]
003	Duty Control Thresh	*ENG	[0 to 999999999 / **0** / 1 mm/step]
004	Forced CPM Down Thresh: No Duty Control	*ENG	[0 to 5000 / **0** / 1 page/step]
005	Drum Stop Time: No Duty Control	*ENG	[300 to 1500 / **500** / 10 msec/step]
006	ITB Stop Time: No Duty Control	*ENG	[300 to 1500 / **500** / 10 msec/step]
007	Forced CPM Down Thresh: Duty Control	*ENG	[0 to 5000 / **1** / 1 page/step]
008	Drum Stop Time: Duty Control	*ENG	[300 to 1500 / **1500** / 10 msec/step]
009	ITB Stop Time: Duty Control	*ENG	[300 to 1500 / **1500** / 10 msec/step]
010	Duty Control: Start Time	*ENG	Displays the time of the duty control execution.

WWW.SERVICE-MANUAL.NET

5.4 MAIN SP TABLES-3

5.4.1 SP3-XXX (PROCESS)

3011	[Process Cont. Manual Execution]		
001	Normal	-	Executes the normal process control manually (potential control). Check the result with SP3-325-001 and 3-012-001 after executing this SP.
002	Density Adjustment	-	Executes the toner density adjustment manually.
003	Pre-ACC	-	Executes the process control that is normally done before ACC. The type of process control is selected with SP3-041-004.
004	Full MUSIC	-	Executes the process control that is normally done at the same time as MUSIC. This SP does the MUSIC (line position adjustment) twice.
005	Normal MUSIC	-	Executes the process control that is normally done at the same time as MUSIC. This SP does the MUSIC (line position adjustment) once.

WWW.SERVICE-MANUAL.NET

3012	[Process Cont. Check Result] Process Control Self-check Result		
	Displays the result of the latest process control self-check. All colors are displayed. The results are displayed in the order “Y C M K” e.g., 11 (Y) 99 (C) 11 (M) 11 (K): The self-check for Cyan failed but the others were successful. See the "Error Condition Tables" in the "Appendix: Process Control Error Conditions" section for details.		
001	History: Latest	*ENG	[1111 to 99999999 / **99999999** / 1/step]
002	Result: Latest 1	*ENG	
003	Result: Latest 2	*ENG	
004	Result: Latest 3	*ENG	
005	Result: Latest 4	*ENG	
006	Result: Latest 5	*ENG	
007	Result: Latest 6	*ENG	
008	Result: Latest 7	*ENG	
009	Result: Latest 8	*ENG	
010	Result: Latest 9	*ENG	

3013	[T Sensor Initial Set: Execution] Developer Initialization Setting		
001	Execution: ALL	-	Executes the developer initialization for each color.
002	Execution: COL	-	
003	Execution: Bk	-	
004	Execution: M	-	
005	Execution: C	-	
006	Execution: Y	-	

System Maintenance

WWW.SERVICE-MANUAL.NET

3014	[T Sensor Initial Set Result: Display] Developer Initialization Result: Display		
001	Display: YCMK	*ENG	[0 to 9999 / 9999 / 1 /step] 1: Success, 2 to 9: Failure
	Displays the developer initialization result. See section "Developer Initialization Result" in the "Appendix: Process Control Error Conditions" section for details on the meaning of each code. All colors are displayed. Values are displayed in the order Y C M Bk. e.g., 1 (Y) 2 (C) 1 (M) 1 (Bk): Initialization of Cyan failed but the others succeeded.		

3015	[Forced Toner Supply: Execute] Forced Toner Supply ([Color])		
001	Execution: ALL	-	Executes the manual toner supply to the development unit.
002	Execution: COL	-	
003	Execution: Bk	-	
004	Execution: M	-	
005	Execution: C	-	
006	Execution: Y	-	

3016	[Forced Toner Supply: Setting] Forced Toner Supply Setting ([Color])		
	Specifies the manual toner supply time for each color.		
001	Supply Time: Bk	*ENG	[0 to 30 / **4** / 1 sec/step]
002	Supply Time: M	*ENG	
003	Supply Time: C	*ENG	
004	Supply Time: Y	*ENG	

WWW.SERVICE-MANUAL.NET

3041	[Process Control Type]		
001	Voltage Control	*ENG	[0 or 1 / **1** / 1/step] Alphanumeric 0: FIXED (Use the fixed values for the charge DC bias and development DC bias set with SP2-005 and SP2-229.) 1: CONTROL
	Enables or disables potential control.		
002	LD Power Control	*ENG	[0 or 1 / **1** / 1/step] Alphanumeric 0: FIXED (at the value in SP2221-xxx) 1: CONTROL (adjusted by process control)
	Selects the LD power control mode.		
003	AutoControl Prohibition Set	*ENG	[0 or 1 / **0** / -] 0: Permit, 1: Forbid
	Enables or disables the automatic process control prohibition.		
004	Pre-ACC	*ENG	[0 to 2 / **2** / 1/step] 0: Not Executed 1: Process Control 2: TC Control (TD Adjustment) 3: Not used
	Selects the process control mode that is done before ACC.		
005	Pattern Calculation Method	*ENG	[0 to 2 / **2** / 1/step] 0: FIXED 1: INITIALIZED 2: CALCULATED
	Selects the process control method.		

WWW.SERVICE-MANUAL.NET

3043	[TD Adjustment Mode]		
001	Repeat Number: Power ON	*ENG	[0 to 9 / **4** / 1 time/step]
	Specifies the maximum number of repeats of the toner density adjustment at power on. 0: Disabled, 1 to 3: Repeat number, 4: Repeat three times (No consumption mode) 5: Repeat three times (Toner is supplied only when the toner density is too low, and toner is consumed only when the toner density is too dark.) 6 to 9: Disabled		
002	Repeat Number: Initialization	*ENG	[0 to 9 / **3** / 1 time/step]
	Specifies the maximum number of repeats of the toner density adjustment at the developer initialization. 0: Disabled, 1 to 3: Repeat number, 4: Repeat three times (No consumption mode) 5: Repeat three times (Toner is supplied only when the toner density is too low, and toner is consumed only when the toner density is too dark.) 6 to 9: Disabled		
003	Repeat Number: Non-use	*ENG	[0 to 9 / **0** / 1 time/step]
	Specifies the maximum number of repeats of the toner density adjustment in stand by mode. 0: Disabled, 1 to 3: Repeat number, 4: Repeat three times (No consumption mode) 5: Repeat three times (Toner is supplied only when the toner density is too low, and toner is consumed only when the toner density is too dark.) 6 to 9: Disabled		

WWW.SERVICE-MANUAL.NET

004	Repeat Number: ACC	*ENG	[0 to 9 / **3** / 1 time/step]
	Specifies the maximum number of repeats of the toner density adjustment at ACC. 0: Disabled, 1 to 3: Repeat number, 4: Repeat three times (No consumption mode) 5: Repeat three times (Toner is supplied only when the toner density is too low, and toner is consumed only when the toner density is too dark.) 6 to 9: Disabled		
005	Repeat Number: Recovery	*ENG	[0 to 9 / **0** / 1 time/step]
	Not used		
006	Repeat Number: Job End	*ENG	[0 to 9 / **4** / 1 time/step]
	Specifies the maximum number of repeats of the toner density adjustment at job end. 0: Disabled, 1 to 3: Repeat number, 4: Repeat three times (No consumption mode) 5: Repeat three times (Toner is supplied only when the toner density is too low, and toner is consumed only when the toner density is too dark.) 6 to 9: Disabled		
007	Repeat: Interrupt	*ENG	[0 to 9 / **0** / 1 time/step]
	Specifies the maximum number of repeats of the toner density adjustment during printing. **DFU**		
008	Toner Supply Coefficient	*ENG	[0 to 25.5 / **10** / 0.1 sec/step]
	Adjusts the time for the toner supply mode when a toner density is detected to be low.		

WWW.SERVICE-MANUAL.NET

009	Consumption pattern: Bk	*ENG	[0 to 255 / **5** / 1 time/step]
	Specifies the belt mark generating time for checking the black toner density when toner density is detected to be low at the toner density adjustment.		
010	Consumption pattern: M	*ENG	[0 to 255 / **5** / 1 time/step]
	Specifies the belt mark generating time for checking the magenta toner density when toner density is detected to be low at the toner density adjustment.		
011	Consumption pattern: C	*ENG	[0 to 255 / **5** / 1 time/step]
	Specifies the belt mark generating time for checking the cyan toner density when toner density is detected to be low at the toner density adjustment.		
012	Consumption pattern: Y	*ENG	[0 to 255 / **5** / 1 time/step]
	Specifies the belt mark generating time for checking the yellow toner density when toner density is detected to be low at the toner density adjustment.		
013	T1 Bias: Bk	*ENG	[0 to 80 / **C2.5c: 30, C2.5d: 37** / 1 µA/step]
	Adjusts the image transfer belt bias for Black.		
014	T2 Bias: M	*ENG	[0 to 80 / **C2.5c: 33, C2.5d: 41**/ 1 µA/step]
	Adjusts the image transfer belt bias for Magenta.		
015	T3 Bias: C	*ENG	[0 to 80 / **C2.5c: 30, C2.5d: 37**/ 1 µA/step]
	Adjusts the image transfer belt bias for Cyan.		
016	T4 Bias: Y	*ENG	[0 to 80 / **C2.5c: 38, C2.5d: 47** / 1 µA/step]
	Adjusts the image transfer belt bias for Yellow.		

WWW.SERVICE-MANUAL.NET

017	Developer Mixing Time	*ENG	[0 to 250 / **10** / 1 sec/step]
	Specifies the developer mixing time at the toner density adjustment.		
018	Consumption Pattern: LD: DUTY: Bk	*ENG	[0 to 15 / **15** / 1 /step]
	Adjusts the LD duty for the toner consumption mode at the toner density adjustment. In toner consumption mode, toner is discharged when the detected development gamma values (SP3611-001) exceed the target values (SP3611-005) by more than the specified thresholds (SP3239-009).		
019	Consumption Pattern: LD: DUTY: M	*ENG	[0 to 15 / **15** / 1 /step]
	Adjusts the LD duty for the toner consumption mode at the toner density adjustment. In toner consumption mode, toner is discharged when the detected development gamma values (SP3611-002) exceed the target values (SP3611-006) by more than the specified thresholds (SP3239-009).		
020	Consumption Pattern: LD: DUTY: C	*ENG	[0 to 15 / **15** / 1 /step]
	Adjusts the LD duty for the toner consumption mode at the toner density adjustment. In toner consumption mode, toner is discharged when the detected development gamma values (SP3611-003) exceed the target values (SP3611-007) by more than the specified thresholds (SP3239-009).		
021	Consumption Pattern: LD: DUTY: Y	*ENG	[0 to 15 / **15** / 1 /step]
	Adjusts the LD duty for the toner consumption mode at the toner density adjustment. In toner consumption mode, toner is discharged when the detected development gamma values (SP3611-004) exceed the target values (SP3611-008) by more than the specified thresholds (SP3239-009).		

WWW.SERVICE-MANUAL.NET

3044	[Toner Supply Type] Toner Supply Type ([Color])		
	Selects the toner supply method type.		
001	Bk	*ENG	[0 to 3 / **2** / 1/step] Alphanumeric 0: FIXED (with the supply rates stored with SP 3401) 1: PID (Vtref_Fixed) 2: PID (Vtref_Control) 3: Not used
002	M	*ENG	
003	C	*ENG	
004	Y	*ENG	

3045	[Toner End Detection: Set]		
	Enables/disables the toner alert display on the LCD.		
001	ON/OFF	*ENG	[0 or 1 / **0** / 1/step] 0: Detect, 1: Not Detect

3102	[Toner End Recovery]		
	Adjusts the number of times toner supply is attempted for each color when the TD sensor continues to detect toner end during toner recovery.		
001	Repeat: Bk	*ENG	[1 to 20 / **5** / 1 time/step]
002	Repeat: M	*ENG	
003	Repeat: C	*ENG	
004	Repeat: Y	*ENG	

WWW.SERVICE-MANUAL.NET

3131	[TE Count m: Display]		
	Display the number of toner end detections for each color.		
001	Bk	*ENG	[0 to 99 / **0** / 1 time/step]
002	M	*ENG	
003	C	*ENG	
004	Y	*ENG	

3201	[TD Sensor: Vt Display]		
	Display the current voltage of the TD sensor for each color.		
001	Current: Bk	*ENG	[0 to 5.5 / **0.01** / 0.01 V/step]
002	Current: M	*ENG	
003	Current: C	*ENG	
004	Current: Y	*ENG	

3211	[Vt Shift: Display/Set]		
	Adjusts the Vt correction value for each line speed. Thick 1: 154 mm/sec, Thick 2&Fine: 77 mm/sec		
001	Thick 1 Shift: Bk	*ENG	[0 to 5 / **C2.5c: 0.15, C2.5d: 0.48** / 0.01 V/step]
002	Thick 1 Shift: M	*ENG	[0 to 5 / **C2.5c: 0.17, C2.5d: 0.47** / 0.01 V/step]
003	Thick 1 Shift: C	*ENG	[0 to 5 / **C2.5c: 0.15, C2.5d: 0.51** / 0.01 V/step]
004	Thick 1 Shift: Y	*ENG	
005	Thick 2 & FINE Shift: Bk	*ENG	[0 to 5 / **C2.5c: 0.51, C2.5d: 0.9** / 0.01 V/step]
006	Thick 2 & FINE Shift: M	*ENG	[0 to 5 / **C2.5c: 0.53, C2.5d: 0.9** / 0.01 V/step]

System Maintenance

WWW.SERVICE-MANUAL.NET

007	Thick 2 & FINE Shift: C	*ENG	[0 to 5 / **C2.5c: 0.47, C2.5d: 0.8** / 0.01 V/step]
008	Thick 2 & FINE Shift: Y	*ENG	[0 to 5 / **C2.5c: 0.47, C2.5d: 0.8** / 0.01 V/step]
009	Mid TCShift: Bk	*ENG	[-0.5 to 0.5 / **0** / 0.01 V/step]
010	Mid TCShift: M	*ENG	
011	Mid TCShift: C	*ENG	
012	Mid TCShift: Y	*ENG	
013	Low TCShift: Bk	*ENG	[-0.5 to 0.5 / **0** / 0.01 V/step]
014	Low TCShift: M	*ENG	
015	Low TCShift: C	*ENG	
016	Low TCShift: Y	*ENG	

3221	[Vtcnt: Display/Set]		
	Displays or adjusts the current Vtcnt value for each color.		
001	Current: Bk	*ENG	[2 to 5 / **3.86** / 0.01 V/step]
002	Current: M	*ENG	
003	Current: C	*ENG	
004	Current: Y	*ENG	
005-008	Displays or adjusts the Vtcnt value for each color at developer initialization. **DFU**		
005	Initial: Bk	*ENG	[2 to 5 / **3.86** / 0.01 V/step]
006	Initial: M	*ENG	
007	Initial: C	*ENG	
008	Initial: Y	*ENG	

WWW.SERVICE-MANUAL.NET

3222	[Vtref: Display/Set]		
	Displays or adjusts the current Vtref value for each color.		
001	Current: Bk	*ENG	[0 to 5.5 / **3** / 0.01 V/step]
002	Current: M	*ENG	
003	Current: C	*ENG	
004	Current: Y	*ENG	
005-008	Displays or adjusts the Vtref value for each color at developer initialization. **DFU**		
005	Initial: Bk	*ENG	[0 to 5.5 / **3** / 0.01 V/step]
006	Initial: M	*ENG	
007	Initial: C	*ENG	
008	Initial: Y	*ENG	
009-012	Displays and adjusts Vtref correction by pixel coverage for each color. **DFU**		
009	Pixel Correction: Bk	*ENG	[-5 to 5.5 / **0** / 0.01 V/step]
010	Pixel Correction: M	*ENG	
011	Pixel Correction: C	*ENG	
012	Pixel Correction: Y	*ENG	

WWW.SERVICE-MANUAL.NET

3239	[Vtref Correction: Setting]		
	Adjusts the parameter for Vtref correction at the process control.		
001	(+)Consumption: Bk	*ENG	[0 to 1 / **0.05** / 0.01 V/step]
002	(+)Consumption: M	*ENG	
003	(+)Consumption: C	*ENG	
004	(+)Consumption: Y	*ENG	
005	(-)Consumption: Bk	*ENG	
006	(-)Consumption: M	*ENG	
007	(-)Consumption: C	*ENG	
008	(-)Consumption: Y	*ENG	
009-012	Threshold for development gamma rank.		
009	P Rank 1 Threshold	*ENG	[0 to 2 / **0.2** / 0.1 /step]
010	P Rank 2 Threshold	*ENG	[0 to 2 / **0.05** / 0.1 /step]
011	P Rank 3 Threshold	*ENG	[-2 to 0 / **-0.05** / 0.1 /step]
012	P Rank 4 Threshold	*ENG	[-2 to 0 / **-0.2** / 0.1 /step]
013-014	Threshold for image density rank on the image transfer belt.		
013	T Rank 1 Threshold	*ENG	[-1 to 0 / **-0.2** / 0.01 V/step]
014	T Rank 2 Threshold	*ENG	[0 to 1 / **0.2** / 0.01 V/step]

WWW.SERVICE-MANUAL.NET

3241	[Background Potential Setting]		
001	Coefficient: Bk	*ENG	These are parameters for calculating the charge bias referring to the development bias at process control. [-1000 to 1000 / **0** / 1 /step] DC charge bias = Development bias x (1 + 0.001 x these vales) + SP3-241-005 to -008
002	Coefficient: M	*ENG	
003	Coefficient: C	*ENG	
004	Coefficient: Y	*ENG	
005	Offset: Bk	*ENG	These are additional values for calculating the charge bias referring to the development bias at process control. [0 to 255 / **140** / 1 V/step] DC charge bias = Development bias x (1 + 0.001 x SP3-241-001 to -004) + these values
006	Offset: M	*ENG	
007	Offset: C	*ENG	
008	Offset: Y	*ENG	

3242	[LD Power Setting]		
	Adjusts the coefficient for LD power control value at the process control.		
001	StdSpd:Coefficient: Bk	*ENG	[-1000 to 1000 / **124** / 1 /step]
002	StdSpd:Coefficient: M	*ENG	
003	StdSpd:Coefficient: C	*ENG	
004	StdSpd:Coefficient: Y	*ENG	
005	StdSpd:Offset: Bk	*ENG	[-1000 to 1000 / **26** / 1 /step]
006	StdSpd:Offset: M	*ENG	
007	StdSpd:Offset: C	*ENG	
008	StdSpd:Offset: Y	*ENG	
009	MidSpd:coef:Bk	*ENG	[-1000 to 1000 / **101** / 1 /step]
010	MidSpd:coef:M	*ENG	[-1000 to 1000 / **62** / 1 /step]

WWW.SERVICE-MANUAL.NET

011	MidSpd:coef:C	*ENG	[-1000 to 1000 / **99** / 1 /step]
012	MidSpd:coef:Y	*ENG	[-1000 to 1000 / **74** / 1 /step]
013	MidSpd:offset:Bk	*ENG	[-1000 to 1000 / **69** / 1 /step]
014	MidSpd:offset:M	*ENG	[-1000 to 1000 / **95** / 1 /step]
015	MidSpd:offset:C	*ENG	[-1000 to 1000 / **63** / 1 /step]
016	MidSpd:offset:Y	*ENG	[-1000 to 1000 / **82** / 1 /step]
017	LowSpd:Coef:Bk	*ENG	[-1000 to 1000 / **81** / 1 /step]
018	LowSpd:Coef:M	*ENG	[-1000 to 1000 / **61** / 1 /step]
019	LowSpd:Coef:C	*ENG	[-1000 to 1000 / **86** / 1 /step]
020	LowSpd:Coef:Y	*ENG	[-1000 to 1000 / **67** / 1 /step]
021	LowSpd:offset:Bk	*ENG	[-1000 to 1000 / **82** / 1 /step]
022	LowSpd:offset:M	*ENG	[-1000 to 1000 / **92** / 1 /step]
023	LowSpd:offset:C	*ENG	[-1000 to 1000 / **68** / 1 /step]
024	LowSpd:offset:Y	*ENG	[-1000 to 1000 / **87** / 1 /step]

WWW.SERVICE-MANUAL.NET

3251	[Coverage]		
	These (-001 to -016) are coefficients for SP3-222-009 to -012.		
001	Latest Pixel: Bk	*ENG	Displays the latest coverage for each color. [0 to 9999 / **0** / 1 cm^2/step]
002	Latest Pixel: M	*ENG	
003	Latest Pixel: C	*ENG	
004	Latest Pixel: Y	*ENG	
005-008	Displays the average coverage of each color for the Vtref correction. "Average S" is defined when the number of developed pages does not reach the number specified with SP3251-017.		
005	Average S: Bk	*ENG	[0 to 100 / **5** / 0.01 %/step]
006	Average S: M	*ENG	
007	Average S: C	*ENG	
008	Average S: Y	*ENG	
009-012	Displays the average coverage of each color for the Vtref correction. "Average M" is defined when the number of developed pages does not reach the number specified with SP3251-018.		
009	Average M: Bk	*ENG	[0 to 100 / **5** / 0.01 %/step]
010	Average M: M	*ENG	
011	Average M: C	*ENG	
012	Average M: Y	*ENG	
013-016	Displays the average coverage of each color for the Vtref correction. "Average L" is defined when the number of developed pages does not reach the number specified with SP3-251-019.		
013	Average L: Bk	*ENG	[0 to 100 / **5** / 0.01 %/step]
014	Average L: M	*ENG	
015	Average L: C	*ENG	

System Maintenance

WWW.SERVICE-MANUAL.NET

016	Average L: Y	*ENG	
017-019	Adjusts the threshold for SP3-251-005 to -016.		
017	Total Page Setting: S	*ENG	[1 to 100 / **10** / 1 sheet/step]
018	Total Page Setting: M	*ENG	[1 to 500 / **10** / 1 sheet/step]
019	Total Page Setting: L	*ENG	[1 to 999 / **50** / 1 sheet/step]
020-023	Adjusts the threshold for SP3-251-024 to -027.		
020	Total Page Setting: S2	*ENG	[1 to 100 / **40** / 1 sheet/step]
021	Total Page Setting: M2	*ENG	[1 to 500 / **10** / 1 sheet/step]
022	Total Page Setting: L2	*ENG	[1 to 999 / **50** / 1 sheet/step]
024-027	Displays the latest coverage ratio for each color.		
024	Latest Coverage: Bk	*ENG	[0 to 100 / - / 0.01 %/step]
025	Latest Coverage: M	*ENG	
026	Latest Coverage: C	*ENG	
027	Latest Coverage: Y	*ENG	
028	Displays the threshold of whether to perform developer churning or not.		
	DevMix Threshold	*ENG	[0 to 100 / **20** / 1 %/step]

WWW.SERVICE-MANUAL.NET

3311	[ID Sensor Detection Value: Voffset]		
	Displays the ID sensor (regular) offset voltage for Vsg adjustments.		
001	Voffset reg: Bk	*ENG	[0 to 5 / **0** / 0.01 V/step]
002	Voffset reg: M	*ENG	[0 to 5.5 / **0** / 0.01 V/step]
003	Voffset reg: C	*ENG	
004	Voffset reg: Y	*ENG	
005-007	Displays the ID sensor (diffusion) offset voltage for Vsg adjustments.		
005	Voffset dif: M	*ENG	[0 to 5.5 / **0** / 0.01 V/step]
006	Voffset dif: C	*ENG	
007	Voffset dif: Y	*ENG	
008-010	Displays the ID sensor offset voltage for Vsg adjustments.		
008	Voffset TM (Front)	*ENG	[0 to 5.5 / **0** / 0.01 V/step]
009	Voffset TM (Center)	*ENG	
010	Voffset TM (Rear)	*ENG	

3321	[Vsg Adjustment: Execution]		
010	P/TM Sensor All	-	Execute the ID sensor initialization setting for all sensors

System Maintenance

WWW.SERVICE-MANUAL.NET

3322	[Vsg Adjustment Result: Vsg]		
	Displays the result value of the Vsg adjustment for each sensor.		
001	Vsg reg: Bk	*ENG	[0 to 5.5 / **0** / 0.01 V/step]
002	Vsg reg: M	*ENG	
003	Vsg reg: C	*ENG	
004	Vsg reg: Y	*ENG	
005	Vsg dif: M	*ENG	
006	Vsg dif: C	*ENG	
007	Vsg dif: Y	*ENG	
008	Vsg TM (Front)	*ENG	
009	Vsg TM (Center)	*ENG	
010	Vsg TM (Rear)	*ENG	

3325	[Vsg Adjustment Result]		
	Displays the result of the Vsg adjustment. The displayed numbers mean the result of each sensor (sensor for Front, sensor for Bk, sensor for Cyan, sensor for Center, sensor for Magenta, sensor for Yellow and sensor for Rear).		
001	History: Latest	*ENG	[111 to 999 / **999** / 1 /step] 9: Unexpected error 3: Offset voltage error 2: Vsg adjustment value error 1: O.K
002	Result: Latest 1	*ENG	
003	Result: Latest 2	*ENG	
004	Result: Latest 3	*ENG	
005	Result: Latest 4	*ENG	
006	Result: Latest 5	*ENG	
007	Result: Latest 6	*ENG	
008	Result: Latest 7	*ENG	

WWW.SERVICE-MANUAL.NET

009	Result: Latest 8	*ENG	
010	Result: Latest 9	*ENG	

3401	[Fixed Supply Mode]		
	Adjusts the toner supply rate in the fixed toner supply mode.		
001	Fixed Rate: Bk	*ENG	[0 to 100 / **5** / 1 %/step] These SPs are used only when SP3-044 is set to "1".
002	Fixed Rate: M	*ENG	
003	Fixed Rate: C	*ENG	
004	Fixed Rate: Y	*ENG	

3411	[Toner Supply Rate: Display]		
	Displays the current toner supply rate.		
001	Latest: Bk	*ENG	[0 to 100 / **-** / 1 %/step]
002	Latest: M	*ENG	
003	Latest: C	*ENG	
004	Latest: Y	*ENG	

3421	[Toner Supply Range]		
001	Upper Limit: Bk	*ENG	Adjusts the toner supply rate during printing. [0 to 100 / **100** / 1%/step]
002	Upper Limit: M	*ENG	
003	Upper Limit: C	*ENG	
004	Upper Limit: Y	*ENG	
005	Minimum Supply Time: Bk	*ENG	Adjusts the minimum toner supply time. [0 to 1000 / **0** / 1 msec/step]
006	Minimum Supply Time: M	*ENG	
007	Minimum Supply Time: C	*ENG	
008	Minimum Supply Time: Y	*ENG	

System Maintenance

WWW.SERVICE-MANUAL.NET

3501	[Process Control Target M/A]		
	Adjusts the target M/A.		
001	Maximum M/A: Bk	*ENG	[0 to 1 / **0.444** / 0.001 mg/cm^2/step]
002	Maximum M/A: M	*ENG	
003	Maximum M/A: C	*ENG	
004	Maximum M/A: Y	*ENG	

3510	[Pixel Adj. Sheet Counter: Display]		
	Displays the total page counter for each adjustment mode.		
001	Potential Control: BW	*ENG	[0 to 2000 / **0** / 1 page/step]
002	Potential Control: FC	*ENG	
003	Power ON: BW	*ENG	
004	Power ON: FC	*ENG	
005	MUSIC: BW	*ENG	
006	MUSIC: FC	*ENG	
007	Vsg Adj.	*ENG	
008	Charge AC Control	*ENG	
009	MUSIC: Power ON: BW	*ENG	
010	MUSIC: Power ON: FC	*ENG	

WWW.SERVICE-MANUAL.NET

3511	[Execution Interval: Setting]		
	Adjusts the threshold for each adjustment mode.		
001	Job End: Potential Control: BW	*ENG	[0 to 2000 / **250** / 1 page/step]
002	Job End: Potential Control: FC	*ENG	[0 to 2000 / **100** / 1 page/step]
003	Interrupt: Potential Control: BW	*ENG	[0 to 2000 / **500** / 1 page/step]
004	Interrupt: Potential Control: FC	*ENG	[0 to 2000 / **200** / 1 page/step]
005	Initial: Potential Control: BW	*ENG	[0 to 2000 / **250** / 1 page/step]
006	Initial: Potential Control: FC	*ENG	[0 to 2000 / **100** / 1 page/step]
007	Vsg Adj. Counter	*ENG	[0 to 2000 / **0** / 1 page/step]
008	Charge AC Control Counter	*ENG	
019	Environmental Correction	*ENG	[0 or 1 / **1** / 1 /step] 0: Not Correct (OFF), 1: Correct (ON)
020	Gamma Correction	*ENG	[0 or 1 / **1** / 1 /step] 0: Not Correct (OFF), 1: Correct (ON)
021	Non-use Time Correction	*ENG	[0 or 1 / **1** / 1 /step] 0: Not Correct (OFF), 1: Correct (ON)
022	Correction Coefficient 1: JE: BW	*ENG	[0 to 1 / **0.2** / 0.01 page/step]
023	Correction Coefficient 2: JE: BW	*ENG	[0 to 1 / **1** / 0.01/step]
024	Correction Coefficient 1: JE: FC	*ENG	[0 to 1 / **0.5** / 0.01/step]
025	Correction Coefficient 2: JE: FC	*ENG	[0 to 1 / **1** / 0.01/step]
026	Correction Coefficient 1: Interrupt: BW	*ENG	[0 to 1 / **0.1** / 0.01/step]

WWW.SERVICE-MANUAL.NET

027	Correction Coefficient 2: Interrupt: BW	*ENG	[0 to 1 / **1** / 0.01/step]
028	Correction Coefficient 1: Interrupt: FC	*ENG	[0 to 1 / **0.25** / 0.01/step]
029	Correction Coefficient 2: Interrupt: FC	*ENG	[0 to 1 / **1** / 0.01/step]
030	Max. Number Correction Threshold	*ENG	[0 to 99 / **5** / 1/step]
031	Max. Number Correction Counter	*ENG	[0 to 255 / **0** / 1/step]

3512	[Image Quality Adj.: Interval]		
	Adjusts the timing for execution of process control and line position adjustment.		
001	During Job	*ENG	[0 to 100 / **30** / 1 page/step]
002	During Stand-by	*ENG	[0 to 100 / **10** / 1 minute/step]

3513	[PCU Motor Stop Time: Bk]		
	Displays the last time that the PCDU motors stopped. These are used for process control execution timing.		
001	Year	*ENG	[0 to 99 / **0** / 1/step]
002	Month	*ENG	[1 to 12 / **1** / 1/step]
003	Date	*ENG	[1 to 31 / **1** / 1/step]
004	Hour	*ENG	[0 to 23 / **0** / 1/step]
005	Minute	*ENG	[0 to 59 / **0** / 1/step]

WWW.SERVICE-MANUAL.NET

3514	[Environmental Display: Job End]		
	Displays the environmental conditions for the last job. These are used for process control execution timing.		
001	Temperature	*ENG	[-1280 to 1270 / **0** / 0.1°C/step]
002	Relative Humidity	*ENG	[0 to 1000 / **-** / 0.1%RH/step]
003	Absolute Humidity	*ENG	[0 to 1000 / **-** / 0.1 g/cm^3/step]

3515	[Execution Interval: Display]		
	Displays the current interval for process control execution. When the machine calculates the timing for process control, it uses a number of conditions. These are the results after considering all the conditions.		
001	Job End: Potential Control: BW	*ENG	[0 to 2000 / **500** / 1 page/step]
002	Job End: Potential Control: FC	*ENG	[0 to 2000 / **200** / 1 page/step]
003	Interrupt: Potential Control: BW	*ENG	[0 to 2000 / **500** / 1 page/step]
004	Interrupt: Potential Control: FC	*ENG	[0 to 2000 / **200** / 1 page/step]

3517	[Blade damage prevention mode]		
	Adjusts the threshold temperature for preventing the cleaning blade in the transfer belt cleaning unit from being damaged. If the temperature is above this value, toner is applied to the transfer belt at set intervals during the job to prevent the blade from flipping over.		
001	Execution Temp. Threshold	*ENG	[0 to 50 / **40** / 1°C/step]

System Maintenance

WWW.SERVICE-MANUAL.NET

3519	[Toner End Prohibition Setting]		
	Enables or disables each adjustment at toner near end.		
001	Process Control	*ENG	[0 or 1 / **1** / 1/step] 0: Permit (adjustment is done even toner near end condition) 1: Forbid (adjustment is not done at toner near end condition)
002	MUSIC	*ENG	
003	TC Adj.	*ENG	

3520	[ITB Idling Number]		
	Specifies the number of the ITB idling rotation for each condition.		
001	Temperature: H	*ENG	[0 or 3 / **0** / 1 revolution/step]
002	Temperature: M	*ENG	
003	Temperature: L	*ENG	
004	Temperature: L: Power ON	*ENG	

3521	[Temperature Threshold]		
	Specifies the threshold temperature for each condition. These settings affect the conditions of SP3-520. t1: Threshold between L (low temp.) and M (medium temp.) t2: Threshold between M (medium temp.) and H (high temps)		
001	Threshold: t2	*ENG	[20 or 30 / **25** / 1 deg/step]
002	Threshold: t1	*ENG	[0 or 15 / **15** / 1 deg/step]

WWW.SERVICE-MANUAL.NET

3522	[Initial Process Control Setting]		
	Adjusts the threshold for the process control at power on. When the current condition has changed by more than the values of these SPs when compared with the conditions at the previous operation, the process control at power on is executed.		
002	Non-use Time Setting	*ENG	[0 to 1440 / **360** / 1 minute/step]
003	Temperature Range	*ENG	[0 to 99 / **10** / 1°C/step]
004	Relative Humidity Range	*ENG	[0 to 99 / **50** / 1 %RH/step]
005	Absolute Humidity Range	*ENG	[0 to 99 / **6** / 1 g/m^3/step]
100	[Rapi_timer]		
	Time Setting	*ENG	[0 to 255 / **30** / 1 sec/step]
	Adjusts the time-out time for the Rapi timer.		

3531	[Non-use Time Process Control Setting]		
	Adjusts the threshold for the process control at stand-by. When the current condition has changed by more than the values of these SPs when compared with the conditions at the previous operation, the process control at stand-by is executed.		
001	Non-use Time Setting	*ENG	[0 to 1440 / **360** / 1 minute/step]
002	Temperature Range	*ENG	[0 to 99 / **10** / 1°C/step]
003	Relative Humidity Range	*ENG	[0 to 99 / **50** / 1 %RH/step]
004	Absolute Humidity Range	*ENG	[0 to 99 / **6** / 1 g/m^3/step]
005	Maximum Execution Number	*ENG	Adjusts the maximum execution time for the process control at stand-by. [0 to 99 / **10** / 1 time/step]

WWW.SERVICE-MANUAL.NET

3611	[Development Gamma: Display/Set]		
001	Bk (Current)	*ENG	Displays the current development gamma for each color. [0 to 5 / - / 0.01 mg/cm^2/kV /step]
002	M (Current)	*ENG	
003	C (Current)	*ENG	
004	Y (Current)	*ENG	
005	Bk (Target Display)	*ENG	Displays the target development gamma for each color. [0 to 5 / **0.91** / 0.01 mg/cm^2/kV /step]
006	M (Target Display)	*ENG	
007	C (Target Display)	*ENG	
008	Y (Target Display)	*ENG	
009	Bk (Standard Target Set)	*ENG	Displays the standard target development gamma for each color. [0 to 5 / **0.8** / 0.01 mg/cm^2/kV /step]
010	M (Standard Target Set)	*ENG	
011	C (Standard Target Set)	*ENG	
012	Y (Standard Target Set)	*ENG	
013	Environmental Correction	*ENG	Turns on or off the environmental correction for target development gamma. [0 or 1 / **1** / -] 0: Not Correct, 1: Correct
014	K (Max Correction)	*ENG	Adjusts the maximum correction value for each color. These SPs are effective only when the setting of SP3-611-013 is set to "1". [0 to 5 / **0.15** / 0.01 mg/cm^2/kv/ step]
015	M (Max Correction)	*ENG	
016	C (Max Correction)	*ENG	
017	Y (Max Correction)	*ENG	

WWW.SERVICE-MANUAL.NET

018	K (Max Abs Hum)	*ENG	Adjusts the maximum humidity correction value for each color. These SPs are effective only when the setting of SP3-611-013 is set to "1". [1 to 99 / **20** / 1 g/m^3/step]
019	M (Max Abs Hum)	*ENG	
020	C (Max Abs Hum)	*ENG	
021	Y (Max Abs Hum)	*ENG	

3612	[Vk Display]		
	Displays Vk for each color.		
001	Bk	*ENG	[-300 to 300 / - / 1 V/step]
002	M	*ENG	
003	C	*ENG	
004	Y	*ENG	

3621	[Development DC Control: Display] Plain: High speed, Thick 1: Middle speed, Thick 2 & FINE: Low speed		
	Displays the development DC bias adjusted with the process control for each line speed and color.		
001	Plain: Bk	*ENG	[0 to 700 / **550** / 1 -V/step]
002	Plain: M	*ENG	
003	Plain: C	*ENG	
004	Plain: Y	*ENG	
005	Thick 1: Bk	*ENG	[0 to 700 / **550** / 1 -V/step]
006	Thick 1: M	*ENG	
007	Thick 1: C	*ENG	
008	Thick 1: Y	*ENG	
009	Thick 2 & FINE: Bk	*ENG	[0 to 700 / **550** / 1 -V/step]
010	Thick 2 & FINE: M	*ENG	

WWW.SERVICE-MANUAL.NET

011	Thick 2 & FINE: C	*ENG	
012	Thick 2 & FINE: Y	*ENG	

3631	[Charge DC Control: Display] Plain: High speed, Thick 1: Middle speed, Thick 2 & FINE: Low speed		
	Displays the charge DC voltage adjusted with the process control for each line speed and color.		
001	Plain: Bk	*ENG	[0 to 2000 / **690** / 1 -V/step]
002	Plain: M	*ENG	
003	Plain: C	*ENG	
004	Plain: Y	*ENG	
005	Thick 1 & FINE: Bk	*ENG	[0 to 2000 / **690** / 1 -V/step]
006	Thick 1 & FINE: M	*ENG	
007	Thick 1 & FINE: C	*ENG	
008	Thick 1& FINE: Y	*ENG	
009	Thick 2 & FINE: Bk	*ENG	[0 to 2000 / **690** / 1 -V/step]
010	Thick 2 & FINE: M	*ENG	
011	Thick 2 & FINE: C	*ENG	
012	Thick 2 & FINE: Y	*ENG	

WWW.SERVICE-MANUAL.NET

3641	[Charge AC Control: Display] Plain: High speed		
	Displays the charge AC voltage adjusted with the process control for each color.		
001	Plain: Bk	*ENG	[0 to 3 / **1.75** / 0.01 kV/step]
002	Plain: M	*ENG	
003	Plain: C	*ENG	
004	Plain: Y	*ENG	

3651	[LD Power Control: Display] Plain: High speed, Thick 1: Middle speed, Thick 2 & FINE: Low speed		
	Displays the LD power adjusted for each environment.		
001	Plain: Bk	*ENG	[0 to 200 / **100** / 1 %/step]
002	Plain: M	*ENG	
003	Plain: C	*ENG	
004	Plain: Y	*ENG	
005	Thick 1: Bk	*ENG	[0 to 200 / **100** / 1 %/step]
006	Thick 1: M	*ENG	
007	Thick 1: C	*ENG	
008	Thick 1: Y	*ENG	
009	Thick 2 & FINE: Bk	*ENG	[0 to 200 / **100** / 1 %/step]
010	Thick 2 & FINE: M	*ENG	
011	Thick 2 & FINE: C	*ENG	
012	Thick 2 & FINE: Y	*ENG	

WWW.SERVICE-MANUAL.NET

3710	[HST Concentration Control: Set] TD Sensor: Toner Concentration Control Setting		
	Selects the toner concentration control method by HST memory, which is in the TD sensor.		
001	Control Method: Selection	*ENG	[0 or 1 / **1** / -] 0: Not Use, 1: Use

3711	[HST Concentration Control: Bk]		
	Displays the factory settings of the black PCDU.		
001	Vcnt	*ENG	[0 to 5 / **4** / 0.1 V/step]
002	Vt	*ENG	[0 to 5 / **2.5** / 0.1 V/step]
003	Sensitivity: HL	*ENG	[1.22 to 3.77 / **2.1** / 0.01 V/step]
004	Sensitivity: HM	*ENG	[0 to 2.55 / **1.05** / 0.01 V/step]
005	Sensitivity: ML	*ENG	
006	Set Detection	*ENG	[0 to 5 / **1** / 0.1 V/step]
007	Without Developer	*ENG	[0 to 5 / **1.2** / 0.1 V/step]
008	With Developer	*ENG	[0 to 5 / **1.3** / 0.1 V/step]
009	Serial Number 1	*ENG	[0 to 255 / **-** / 1 V/step]
010	Serial Number 2	*ENG	
011	Adjustment: Vt	*ENG	[0 to 5 / **3** / 0.1 V/step]
012	Adjustment: Vtref	*ENG	[0 to 5 / **3** / 0.1 V/step]
013	Adjustment: Vtcnt	*ENG	[0 to 5 / **4** / 0.01 V/step]
014	Adjustment: Gamma	*ENG	[0 to 2.55 / **0** / 0.01 mg/cm^2/kV /step]
015	Adjustment: Vcnt Result	*ENG	[0 to 9 / **9** / 1 /step]

WWW.SERVICE-MANUAL.NET

3712	[HST Concentration Control: M]		
	Displays the factory settings of the magenta PCDU.		
001	Vcnt	*ENG	[0 to 5 / **4** / 0.1 V/step]
002	Vt	*ENG	[0 to 5 / **2.5** / 0.1 V/step]
003	Sensitivity: HL	*ENG	[1.22 to 3.77 / **2.1** / 0.01 V/step]
004	Sensitivity: HM	*ENG	[0 to 2.55 / **1.05** / 0.01 V/step]
005	Sensitivity: ML	*ENG	
006	Set Detection	*ENG	[0 to 5 / **1** / 0.1 V/step]
007	Without Developer	*ENG	[0 to 5 / **1.2** / 0.1 V/step]
008	With Developer	*ENG	[0 to 5 / **1.3** / 0.1 V/step]
009	Serial Number 1	*ENG	[0 to 255 / **-** / 1 V/step]
010	Serial Number 2	*ENG	
011	Adjustment: Vt	*ENG	[0 to 5 / **3** / 0.1 V/step]
012	Adjustment: Vtref	*ENG	[0 to 5 / **3** / 0.1 V/step]
013	Adjustment: Vtcnt	*ENG	[0 to 5 / **4** / 0.01 V/step]
014	Adjustment: Gamma	*ENG	[0 to 2.55 / **0** / 0.01 mg/cm^2/kV /step]
015	Adjustment: Vcnt Result	*ENG	[0 to 9 / **9** / 1 /step]

WWW.SERVICE-MANUAL.NET

3713	[HST Concentration Control: C]		
	Displays the factory settings of the cyan PCDU.		
001	Vcnt	*ENG	[0 to 5 / **4** / 0.1 V/step]
002	Vt	*ENG	[0 to 5 / **2.5** / 0.1 V/step]
003	Sensitivity: HL	*ENG	[1.22 to 3.77 / **2.1** / 0.01 V/step]
004	Sensitivity: HM	*ENG	[0 to 2.55 / **1.05** / 0.01 V/step]
005	Sensitivity: ML	*ENG	
006	Set Detection	*ENG	[0 to 5 / **1** / 0.1 V/step]
007	Without Developer	*ENG	[0 to 5 / **1.2** / 0.1 V/step]
008	With Developer	*ENG	[0 to 5 / **1.3** / 0.1 V/step]
009	Serial Number 1	*ENG	[0 to 255 / **-** / 1 V/step]
010	Serial Number 2	*ENG	
011	Adjustment: Vt	*ENG	[0 to 5 / **3** / 0.1 V/step]
012	Adjustment: Vtref	*ENG	[0 to 5 / **3** / 0.1 V/step]
013	Adjustment: Vtcnt	*ENG	[0 to 5 / **4** / 0.01 V/step]
014	Adjustment: Gamma	*ENG	[0 to 2.55 / **0** / 0.01 mg/cm^2/kV /step]
015	Adjustment: Vcnt Result	*ENG	[0 to 9 / **9** / 1 /step]

WWW.SERVICE-MANUAL.NET

3714	[HST Concentration Control: Y]		
	Displays the factory settings of the yellow PCDU.		
001	Vcnt	*ENG	[0 to 5 / **4** / 0.1 V/step]
002	Vt	*ENG	[0 to 5 / **2.5** / 0.1 V/step]
003	Sensitivity: HL	*ENG	[1.22 to 3.77 / **2.1** / 0.01 V/step]
004	Sensitivity: HM	*ENG	[0 to 2.55 / **1.05** / 0.01 V/step]
005	Sensitivity: ML	*ENG	
006	Set Detection	*ENG	[0 to 5 / **1** / 0.1 V/step]
007	Without Developer	*ENG	[0 to 5 / **1.2** / 0.1 V/step]
008	With Developer	*ENG	[0 to 5 / **1.3** / 0.1 V/step]
009	Serial Number 1	*ENG	[0 to 255 / **-** / 1 V/step]
010	Serial Number 2	*ENG	
011	Adjustment: Vt	*ENG	[0 to 5 / **3** / 0.1 V/step]
012	Adjustment: Vtref	*ENG	[0 to 5 / **3** / 0.1 V/step]
013	Adjustment: Vtcnt	*ENG	[0 to 5 / **4** / 0.01 V/step]
014	Adjustment: Gamma	*ENG	[0 to 2.55 / **0** / 0.01 mg/cm^2/kV /step]
015	Adjustment: Vcnt Result	*ENG	[0 to 9 / **9** / 1 /step]

System Maintenance

WWW.SERVICE-MANUAL.NET

3800	[Waste Toner Full Detection]		
	Displays/ adjusts the toner collection bottle detection settings. These SPs are used for NRS.		
001	Condition	*CTL	[0 to 4 / **0** / 1 /step]
002	Detection Times	*CTL	[0 to 50 / **-** / 1 /step]
003	Print Page After Near Full	*CTL	[0 to 1000 / **0** / 1 sheet/step]
004	Pixel Count After Near Full	*CTL	[0 to 200000 / **-** / 1 cm^2/step]
005	Pixel Count After Replacement	*CTL	Displays the pixel counter after replacement of toner collection bottle. [0 to 200000 / **-** / 1 cm^2/step]
008	Coefficient	*ENG	[0.5 to 1.5 / **1** / 0.1 /step]
011	Notice Setting	*ENG	Enables or disables the calling for @Remote. [0 or 1 / **1** / -] 0: Enable @Remote calling 1: Disable @Remote calling
	NOTE: If the toner collection bottle has been replaced before the machine detects used toner near full when this setting is set to "0", the machine cannot detect toner collection bottle near full. In that case, set SP3-902-017 to "1".		
012	Day Threshold: Toner Collection bottle:NF	*ENG	[1 to 30 / **5** / 1 day/step]
	Sets the threshold days for the near-full display. The near-full of the toner collection bottle is displayed after the toner collection full sensor has detected the actuator in the toner collection bottle.		

WWW.SERVICE-MANUAL.NET

013	Total:Toner Collection Bottle	*ENG	Displays the total amount of the used toner. [0 to 999999999 / **-** / 1]
014	Mechanism Full Detection Date	*ENG	Displays the date of the full detection fot the toner collection bottle.

3900	[Waste Toner Full Detection]		
	Turns toner collection bottle full detection on or off.		
001	ON/OFF Setting	*ENG	[0 or 1 / **1** / -] 0: OFF, 1: ON

3901	[New PCU Detection]		
	Turns new PCDU detection on or off.		
001	ON/OFF Setting	*ENG	[0 or 1 / **1** / -] 0: OFF, 1: ON

3902	[Manual New Unit Set]		
	Turns the new unit detection flag for each PM unit on or off. The use of these counters is explained in the PM section and in the relevant parts of section 3 (Replacement and Adjustment).		
001	Development Unit: Bk	*ENG	[0 or 1 / **0** / -] 0: OFF, 1: ON
002	Development Unit: Y	*ENG	
003	Development Unit: C	*ENG	
004	Development Unit: M	*ENG	
005	Developer: Bk	*ENG	[0 or 1 / **0** / -] 0: OFF, 1: ON
006	Developer: Y	*ENG	
007	Developer: C	*ENG	
008	Developer: M	*ENG	

System Maintenance

WWW.SERVICE-MANUAL.NET

009	PCU (Drum Unit): Bk	*ENG	[0 or 1 / **0** / -] 0: OFF, 1: ON
010	PCU (Drum Unit): Y	*ENG	
011	PCU (Drum Unit): C	*ENG	
012	PCU (Drum Unit): M	*ENG	
013	Image Transfer Unit	*ENG	[0 or 1 / **0** / -] 0: OFF, 1: ON Do not use 3902-013 if you only change the cleaning unit. 3902-015: This is for the image transfer belt cleaning unit.
014	Fusing Unit	*ENG	
015	Cleaning Unit	*ENG	
016	Paper Transfer Unit	*ENG	
017	Toner Collection Bottle	*ENG	
018	Fusing Roller (Heating Roller)	*ENG	[0 or 1 / **0** / -] 0: OFF, 1: ON "Fusing Roller" is designated as "Heating Roller" in this manual.
019	Pressure Roller	*ENG	

WWW.SERVICE-MANUAL.NET

5.5 MAIN SP TABLES-4

5.5.1 SP4-XXX (SCANNER)

4008	[Sub Scan Magnification Adjustment]		
	Adjusts the sub-scan magnification by changing the scanner motor speed.		
001		*ENG	[-1.0 to 1.0 / **0** / 0.1%/step] **FA**

4010	[L-Edge Regist Adjustment]		
	Adjusts the leading edge registration by changing the scanning start timing in the sub-scan direction.		
001	-	*ENG	[-2.0 to 2.0 / **0** / 0.1 mm/step] **FA**

4011	[S-to-S Regist Adjustment]		
	Adjusts the side-to-side registration by changing the scanning start timing in the main scan direction.		
001	-	*ENG	[-2.5 to 2.5 / **0** / 0.1 mm/step] **FA**

4012	[Scanner Erase Margin: Scale] Scanner: Erase Margin: Scale		
	Sets the blank margin at each side for erasing the original shadow caused by the gap between the original and the scale.		
001	Book: Leading Edge	*ENG	[0 to 3.0 / **0** / 0.1 mm/step] **FA**
002	Book: Trailing Edge		
003	Book: Left		
004	Book: Right		
005	ADF: Leading Edge	*ENG	[0 to 3.0 / **0** / 0.1 mm/step] **FA**
007	ADF: Right		

System Maintenance

WWW.SERVICE-MANUAL.NET

008	ADF: Left		

4013	[Scanner Free Run]		
	Performs the scanner free run with the exposure lamp on or off in the following mode. Full color mode / Full Size / A3 or DLT		
001	Lamp: OFF	*ENG	[0 or 1 / **0** / -] 0: OFF, 1: ON
002	Lamp: ON		

4014	[Scan]		
	Execute the scanner free fun with each mode.		
001	HP Detection Enable	-	Scanner free run with HP sensor check.
002	HP Detection Disable	-	Scanner free run without HP sensor check.

4020	[Dust Check]		
001	Detection: ON/OFF	*ENG	Turns the ADF scan glass dust check on/ off. [0 or 1 / **0** / 1 /step] 0: OFF, 1: ON
002	Detection: Level	*ENG	Selects the detect level. [0 to 8 / **4** / 1 /step] 0: lowest detection level 8: highest detection level

WWW.SERVICE-MANUAL.NET

003	Correction Level	*ENG	Selects the level of the sub scan line correction when using the ARDF. [0 to 4 / **0** / 1 /step] 0: Off 1: Weakest 2: Weak 3: Strong 4: Strongest
011	Dust Detect:On/Off:Rear	*ENG	Not used
012	Dust Detect:Lvl:Rear	*ENG	Not used

4301	[APS Operation Check]		
	Displays a code that represents the original size detected by the original sensors. (See "Input Check Table" in this section.)		
001	APS Operation Check	-	-

4303	[APS Min Size (A5/HLT/16K)]		
	Specifies the result of the detection when the outputs from the original sensors are all OFF.		
001	APS Min. Size (A5/HLT/16K)	*ENG	[0 to 2 / **0** / 1 /step] 0: No Original 1: A5-Lengthwise (16K SEF if 4305 is set to 3)

System Maintenance

WWW.SERVICE-MANUAL.NET

4305	[8K/16K Detection]	*ENG	[0 to 3 / **0** / 1 /step] 0: Normal Detection (the machine detects A4/LT size as A4 or LT, depending on the paper size setting) 1: A4-Sideways LT-Lengthwise 2: LT-Sideways A4-Lengthwise 3: 8K 16K
001	This program enables the machine to automatically recognize the 8K/16K size.		

4308	[Scan Size Detection]		
001	Detection ON/OFF	*ENG	[0 or 1 / **1** / -] 0: OFF 1: ON
	Turns on or off the CCD original size detection. This detection is used only when an original is scanned in book scanning mode.		

4309	[Scan Size Detect:Setting]		
001	Original Density Thresh	*ENG	[0 to 255 / **32** / 1 digit/step]
	Specifies the threshold between an original area and non-original area for the scan original size detection in book scanning mode.		
002	Detection Time	*ENG	[20 to 100 / **60** / 20 msec/step]
	Specifies the detection time for the scan original size detection in book scanning mode.		
003	Lamp ON:Delay Time	*ENG	[0 to 200 / **40** / 20 msec/step]
	Specifies the lamp on timing for the scan original size detection in book scanning mode.		

WWW.SERVICE-MANUAL.NET

4310	[Scan Size Detect Value]		
	Displays the detected value by CCD. Each detection point for paper size and color is displayed on the LCD.		
001	S1:R	*ENG	[0 to 255 / - / 1 digit/step]
002	S1:G	*ENG	
003	S1:B	*ENG	
004	S2:R	*ENG	
005	S2:G	*ENG	
006	S2:B	*ENG	
007	S3:R	*ENG	
008	S3:G	*ENG	
009	S3:B	*ENG	

4400	[Scanner Erase Margin]	*ENG	
	Set the Mask for Original. These SPs set the area to be masked during platen (book) mode scanning.		
001	Book: Leading Edge	[0 to 3.0 / **0** / 0.1 mm/step]	
002	Book: Trailing Edge		
003	Book: Left		
004	Book: Right		
005	ADF: Leading Edge		
007	ADF: Right		
008	ADF: Left		

System Maintenance

WWW.SERVICE-MANUAL.NET

4417	[IPU Test Pattern]	
	Selects the IPU test pattern.	
001	Test Pattern Selection	[0 to 24 / **0** / 1/step]
	0: Scanned image 1: Gradation main scan A 2: Gradation main scan B 3: Gradation main scan C 4: Gradation main scan D 5: Gradation sub scan (1) 6: Grid pattern 7: Slant grid pattern 8: Gradation RGBCMYK 9: UCR pattern 10: Color patch 16 (1) 11: Color patch 16 (2) 12: Color patch 64	13: Grid pattern CMYK 14: Color patch CMYK 15: Gray pattern (1) 16: Gray pattern (2) 17: Gray Pattern (3) 18: Shading pattern 19: Thin line pattern 20: Scanned + Grid pattern 21: Scanned + Gray scale 22: Scanned + Color patch 23: Scanned + Slant Grid C 24: Scanned + Slant Grid D

4429	[Illegal Copy Output]		
001	Copy	*ENG	[0 to 3 / **3** / 1 /step]
002	Scanner		
003	Fax		

4450	[Scan Image Path Selection]	
001	Black Subtraction ON/OFF	[0 or 1 / **1** / -] 0: OFF, 1: ON
	Uses or does not use the black reduction image path.	
002	SH ON/OFF	[0 or 1 / **0** / 1 /step] 0: ON, 1: OFF
	Uses or does not use the shading image path.	

WWW.SERVICE-MANUAL.NET

4501	[ACC Target Density]		
	Selects the ACC result.		
001	Copy: K: Text	*ENG	[0 to 10 / **5** / 1 /step] 10: Darkest density
002	Copy: C: Text	*ENG	
003	Copy: M: Text	*ENG	
004	Copy: Y: Text	*ENG	
005	Copy: K: Photo	*ENG	
006	Copy: C: Photo	*ENG	
007	Copy: M: Photo	*ENG	
008	Copy: Y: Photo	*ENG	

4505	[ACC Cor:Bright]		
	Adjusts the offset correction for light areas of the ACC pattern.		
001	Text:K	*ENG	[-128 to 127 / **0** / 1 /step]
002	Text:C	*ENG	
003	Text:M	*ENG	
004	Text:Y	*ENG	
005	Photo:K	*ENG	[-128 to 127 / **0** / 1 /step]
006	Photo:C	*ENG	
007	Photo:M	*ENG	
008	Photo:Y	*ENG	

WWW.SERVICE-MANUAL.NET

4506	[ACC Cor:Dark]		
	Adjusts the offset correction for dark areas of the ACC pattern.		
001	Text:K	*ENG	[-128 to 127 / **0** / 1 /step]
002	Text:C	*ENG	
003	Text:M	*ENG	
004	Text:Y	*ENG	
005	Photo:K	*ENG	[-128 to 127 / **0** / 1 /step]
006	Photo:C	*ENG	
007	Photo:M	*ENG	
008	Photo:Y	*ENG	

4540	[Printer Vector Correction]		
	This SP corrects the printer coverage of 12 hues (RY, YR, YG, etc. x 4 Colors [R, G, B, Option]) for a total of 48 parameters.		
001-004	RY Phase: Option/R/G/B	*ENG	Specifies the printer vector correction value. [0 to 255 / **0** / 1 /step]
005-008	YR Phase: Option/R/G/B		
009-012	YG Phase: Option/R/G/B		
013-016	GY Phase: Option/R/G/B		
017-020	GC Phase: Option/R/G/B		
021-024	CG Phase: Option/R/G/B		
025-028	CB Phase: Option/R/G/B		
029-032	BC Phase: Option/R/G/B		

WWW.SERVICE-MANUAL.NET

033-036	BM Phase: Option/R/G/B		
037-040	MB Phase: Option/R/G/B		
041-044	MR Phase: Option/R/G/B		
045-048	RM Phase: Option/R/G/B		

4600	[SBU Version Display]		
001	SBU_ID	-	Displays the ID of the SBU.
002	GASBU-N_ID	-	Displays the ID of the GASBU.
003	VSP5100_ID	-	Displays t he ID of the VSP5100.

4602	[Scanner Memory Access]		
001	Scanner Memory Access	-	Enables the read and write check for the SBU registers.

4603	[AGC Execution]		
001	HP Detection Enable	-	Executes the AGC.
002	HP Detection Disable	-	**DFU**

4609	[Gray Balance Set: R]		
001	Book Read	-	[-512 to 511 / **-46** / 1 digit/step]
002	DF Read	-	[-512 to 511 / **-46** / 1 digit/step]

4610	[Gray Balance Set: G]		
001	Book Read	-	[-512 to 511 / **-20** / 1 digit/step]
002	DF Read		

System Maintenance

WWW.SERVICE-MANUAL.NET

4611	[Gray Balance Set: B]		
001	Book Read	-	[-512 to 511 / **-28** / 1 digit/step]
002	DF Read		

4623	[Black Level Adj. Display] RE: Red Even signal, RO: Red Odd signal		
001	Latest: RE Color	-	Displays the black offset value for the even red signal in the CCD circuit board (color printing speed). [0 to 16383 / **0** / 1 digit/step]
002	Latest: RO Color	-	Displays the black offset value for the odd red signal in the CCD circuit board (color printing speed). [0 to 16383 / **0** / 1 digit/step]

4624	[Black Level Adj. Display] GE: Green Even signal, GO: Green Odd signal		
001	Latest: GE Color	-	Displays the black offset value for the even green signal in the CCD circuit board (color printing speed). [0 to 16383 / **0** / 1 digit/step]
002	Latest: GO Color	-	Displays the black offset value for the odd green signal in the CCD circuit board (color printing speed). [0 to 16383 / **0** / 1 digit/step]

WWW.SERVICE-MANUAL.NET

4625	[Black Level Adj. Display] BE: Blue Even signal, BO: Blue Odd signal		
001	Latest: BE Color	-	Displays the black offset value for the even blue signal in the CCD circuit board (color printing speed). [0 to 16383 / **0** / 1 digit/step]
002	Latest: BO Color	-	Displays the black offset value for the odd blue signal in the CCD circuit board (color printing speed). [0 to 16383 / **0** / 1 digit/step]

4628	[Analog Gain Adjustment]		
	Displays the gain value of the amplifiers on the controller for Red.		
001	Latest: R Color	-	[0 to 7 / **0** / 1 digit/step]

4629	[Analog Gain Adjustment]		
	Displays the gain value of the amplifiers on the controller for Green.		
001	Latest: G Color	-	[0 to 7 / **0** / 1 digit/step]

4630	[Analog Gain Adjustment]		
	Displays the gain value of the amplifiers on the controller for Blue.		
001	Latest: B Color	-	[0 to 7 / **0** / 1 digit/step]

4631	[Digital Gain Adjustment]		
	Displays the gain value of the amplifiers on the controller for Red.		
001	Latest: RE Color	-	[0 to 1023 / **0** / 1 digit/step]
002	Latest: RO Color	-	

System Maintenance

WWW.SERVICE-MANUAL.NET

4632	[Digital Gain Adjustment]		
	Displays the gain value of the amplifiers on the controller for Green.		
001	Latest: GE Color	-	[0 to 1023 / **0** / 1 digit/step]
002	Latest: GO Color	-	

4633	[Digital Adjustment]		
	Displays the gain value of the amplifiers on the controller for Blue.		
001	Latest: BE Color	-	[0 to 1023 / **0** / 1 digit/step]
002	Latest: BO Color	-	

4645	[Scan Adjust Error]		
001	White level	-	[0 to 65535 / **0** / 1 digit/step]
002	Black level	-	

4647	[Read Hard Error]		
	Displays the result of the SBU connection check.		
001	Power-ON	-	[0 to 35535 / **0** / 1digit /step] 0: OK, Other: SBU connection check failure If the SBU connection check fails, SC144 occurs.

WWW.SERVICE-MANUAL.NET

4654	[Black Level Adj. Display] RE: Red Even signal, RO: Red Odd signal		
001	Last Correct Value: RE Color	*ENG	Displays the black offset value for the even red signal in the CCD circuit board (color printing speed). [0 to 16383 / **0** / 1 digit/step]
002	Last Correct Value: RO Color	*ENG	Displays the black offset value for the odd red signal in the CCD circuit board (color printing speed). [0 to 16383 / **0** / 1 digit/step]

4655	[Black Level Adj. Display] GE: Green Even signal, GO: Green Odd signal		
001	Last Correct Value: GE Color	*ENG	Displays the black offset value for the even green signal in the CCD circuit board (color printing speed). [0 to 16383 / **0** / 1 digit/step]
002	Last Correct Value: GO Color	*ENG	Displays the black offset value for the odd green signal in the CCD circuit board (color printing speed). [0 to 16383 / **0** / 1 digit/step]

4656	[Black Level Adj. Display] BE: Blue Even signal, BO: Blue Odd signal		
001	Last Correct Value: BE Color	*ENG	Displays the black offset value for the even blue signal in the CCD circuit board (color printing speed). [0 to 16383 / **0** / 1 digit/step]
002	Last Correct Value: BO Color	*ENG	Displays the black offset value for the odd blue signal in the CCD circuit board (color printing speed). [0 to 16383 / **0** / 1 digit/step]

WWW.SERVICE-MANUAL.NET

4658	[Analog Gain Adjustment]		
	Displays the previous gain value of the amplifiers on the controller for Red.		
001	Last Correct Value: RE Color	*ENG	[0 to 7 / **0** / 1 digit/step]

4659	[Analog Gain Adjustment]		
	Displays the previous gain value of the amplifiers on the controller for Green.		
001	Last Correct Value: GE Color	*ENG	[0 to 7 / **0** / 1 digit/step]

4660	[Analog Gain Adjustment]		
	Displays the previous gain value of the amplifiers on the controller for Blue.		
001	Last Correct Value: BE Color	*ENG	[0 to 7 / **0** / 1 digit/step]

4661	[Digital Gain Adjustment] RE: Red Even signal, RO: Red Odd signal		
001	Last Correct Value: RE Color	*ENG	[0 to 1023 / **0** / 1 digit/step]
002	Last Correct Value: RO Color	*ENG	

4662	[Digital Gain Adjustment] GE: Green Even signal, GO: Green Odd signal		
001	Last Correct Value: GE Color	*ENG	[0 to 1023 / **0** / 1 digit/step]
002	Last Correct Value: GO Color	*ENG	

4663	[Digital Gain Adjustment] BE: Blue Even signal, BO: Blue Odd signal		
001	Last Correct Value: BE Color	*ENG	[0 to 1023 / **0** / 1 digit/step]
002	Last Correct Value: BO Color	*ENG	

WWW.SERVICE-MANUAL.NET

4673	[Black Level Adj. Display] RE: Red Even signal, RO: Red Odd signal		
001	Factory Setting: RE Color	*ENG	Displays the factory setting values of the black level adjustment for the even red signal in the CCD circuit board (color printing speed).. [0 to 16383 / **0** / 1 digit/step]
002	Factory Setting: RO Color	*ENG	Displays the factory setting values of the black level adjustment for the odd red signal in the CCD circuit board (color printing speed). [0 to 16383 / **0** / 1 digit/step]

4674	[Black Level Adj. Display] GE: Green Even signal, GO: Green Odd signal		
001	Factory Setting: GE Color	*ENG	Displays the factory setting values of the black level adjustment for the even green signal in the CCD circuit board (color printing speed). [0 to 16383 / **0** / 1 digit/step]
002	Factory Setting: GO Color	*ENG	Displays the factory setting values of the black level adjustment for the odd green signal in the CCD circuit board (color printing speed). [0 to 16383 / **0** / 1 digit/step]

WWW.SERVICE-MANUAL.NET

4675	[Black Level Adj. Display] BE: Blue Even signal, BO: Blue Odd signal		
001	Factory Setting: BE Color	*ENG	Displays the factory setting values of the black level adjustment for the even blue signal in the CCD circuit board (color printing speed). [0 to 16383 / **0** / 1 digit/step]
002	Factory Setting: BO Color	*ENG	Displays the factory setting values of the black level adjustment for the odd blue signal in the CCD circuit board (color printing speed). [0 to 16383 / **0** / 1 digit/step]

4677	[Analog Gain Adjustment]		
	Displays the factory setting values of the gain adjustment for Red.		
001	Factory Setting: RE Color	*ENG	[0 to 7 / **0** / 1 digit/step]

4678	[Analog Gain Adjustment]		
	Displays the factory setting values of the gain adjustment for Green.		
001	Factory Setting: GE Color	*ENG	[0 to 7 / **0** / 1 digit/step]

4679	[Analog Gain Adjustment]		
	Displays the factory setting values of the gain adjustment for Blue.		
001	Factory Setting: BE Color	*ENG	[0 to 7 / **0** / 1 digit/step]

WWW.SERVICE-MANUAL.NET

4680	[Digital Gain Adjustment]		
	Displays the gain value of the amplifiers on the controller for Red.		
001	Factory Setting: RE Color	*ENG	[0 to 1023 / **0** / 1 digit/step]
002	Factory Setting: RO Color	*ENG	

4681	[Digital Gain Adjustment]		
	Displays the gain value of the amplifiers on the controller for Green.		
001	Factory Setting: GE Color	*ENG	[0 to 1023 / **0** / 1 digit/step]
002	Factory Setting: GO Color	*ENG	

4682	[Digital Gain Adjustment]		
	Displays the gain value of the amplifiers on the controller for Blue.		
001	Factory Setting: BE Color	*ENG	[0 to 1023 / **0** / 1 digit/step]
002	Factory Setting: BO Color	*ENG	

4688	[Scan Image Density Adjustment]		
	Adjusts the white shading parameter when scanning an image with the ARDF or 1-pass DF. Adjusts the density level if the ID of outputs made in the DF and Platen mode is different.		
001	ARDF	*ENG	[50 to 150 / **98** / 1%/ step]
002	1-pass DF	*ENG	[50 to 150 / **98** / 1%/ step]

System Maintenance

WWW.SERVICE-MANUAL.NET

4690	[White Level Peak Read]		
	Displays the peak level of the white level scanning.		
001	RE	-	[0 to 1023 / **0** / 1 digit/step]
002	RO	-	

4691	[White Level Peak Read]		
	Displays the peak level of the white level scanning.		
001	GE	-	[0 to 1023 / **0** / 1 digit/step]
002	GO	-	

4692	[White Level Peak Read]		
	Displays the peak level of the white level scanning.		
001	BE	-	[0 to 1023 / **0** / 1 digit/step]
002	BO	-	

4693	[Black Level Peak Read]		
	Displays the peak level of the black level scanning.		
001	RE	-	[0 to 1023 / **0** / 1 digit/step]
002	RO	-	

WWW.SERVICE-MANUAL.NET

4694	[Black Level Peak Read]		
	Displays the peak level of the black level scanning.		
001	GE	-	[0 to 1023 / **0** / 1 digit/step]
002	GO	-	

4695	[Black Level Peak Read]		
	Displays the peak level of the black level scanning.		
001	BE	-	[0 to 1023 / **0** / 1 digit/step]
002	BO	-	

4802	[DF Shading FreeRun]		
001	Lamp OFF	-	Executes the scanner free run of shading movement with exposure lamp on or off. Press "OFF" to stop this free run. Otherwise, the free run lasts.
002	Lamp ON		

4804	[Home Position]		
001	-	-	Executes the scanner HP detection.

4806	[Carriage Save]		
001	-	-	Moves the carriage from the scanner home position. Dust may fall through the DF exposure glass. Therefore, do this SP when you transport the machine a long distance.

WWW.SERVICE-MANUAL.NET

4807	[SBU Test Pattern Change]		
001	-	-	[0 to 250 / **0** / 1 /step] 1: Grid pattern 2: Gradation main scan 3: Gradation sub scan 4 to 250: Default (Scanning Image)

4808	[Factory Setting Input]		
002	Execution Flag	-	[0 or 1 / **0** / 1 /step]

4902	[ACC Data Display]		
	This SP outputs the final data read at the end of ACC execution. A zero is returned if there was an error reading the data. [0 to 255 / **0** / 1 /step]		
001	R DATA1	*ENG	Photo C Patch Level 1 (8-bit)
002	G DATA1	*ENG	Photo M Patch Level 1 (8-bit)
003	B DATA1	*ENG	Photo Y Patch Level 1 (8-bit)
004	R DATA2	*ENG	Photo C Patch Level 17 (8-bit)
005	G DATA2	*ENG	Photo M Patch Level 17(8-bit)
006	B DATA2	*ENG	Photo Y Patch Level 17 (8-bit)

WWW.SERVICE-MANUAL.NET

4918	[Manual Gamma Adj]		
	Adjusts the offset data of the printer gamma for yellow in Photo mode. See “Printer Gamma Correction" in the Replacement and Adjustment for how to use.		
009	-	-	Enter the manual gamma adjustment screen (-001 to 008). For details, see the "Printer Gamma Correction" in the section "Replace and Adjustment".

4954	[Read/Restore Std]		
001	Read New Chart	-	Execute the scanning of the A4 chart.
002	Recall Prev Chart	-	Clear the data of the scanned A4 chart.
003	Read Std Chart	-	Execute the scanning of the A4 standard chart.
004	Set Std Chart	-	Overwrite the standard data.

4991	[IPU Image Path Selection]		
	Selects the image path. Enter the number to be selected using the 10-key pad.		
001	RGB Frame Memory	*ENG	[0 to 11 / **2** / 1 /step]
	0: Scanner input RGB images 1: Scanner I/F RGB images 2: RGB images done by Shading correction (Shading ON, Black offset ON) 3: Shading data 4 to 11: Not used		

System Maintenance

WWW.SERVICE-MANUAL.NET

4993	[High Light Correction]		
001	Sensitivity Selection	*ENG	Selects the Highlight correction level. [0 to 9 / **4** / 1 /step] 0: weakest sensitivity 9: strongest sensitivity
002	Range Selection	*ENG	Selects the range level of Highlight correction. [0 to 9 / **4** / 1 /step] 0: weakest skew correction, 9: strongest skew correction

4994	[Text/Photo Detection Level Adj.]		
	Selects the definition level between Text and Photo for high compression PDF.		
001	PDF Sensitivity Level text/photo	*ENG	[0 to 2 / **1** / 1 /step] 0: Text priority 1: Normal 2: Photo priority

WWW.SERVICE-MANUAL.NET

5.6 MAIN SP TABLES-5

5.6.1 SP5-XXX (MODE)

5024	[mm/inch Display Selection]		
	Display units (mm or inch) for custom paper sizes.		
001	0:mm 1:inch	*CTL	0: mm (Europe/Asia) 1: inch (USA)

5045	[Accounting Counter]		
	Selects the counting method. **NOTE:** The counting method can be changed only once, regardless of whether the counter value is negative or positive.		
001	Counter Method	*CTL	[0 or 1 / **0** / -] 0: Developments 1: Prints

5047	[Paper Display]		
	Turns on or off the printed paper display on the LCD.		
001	-	*CTL	[0 or 1 / **0** / -] 0: OFF, 1: ON

5051	[TonerRefillDetectionDisplay]		
	Enables or disables the toner refill detection display.		
5051 1	Toner Refill Detection Display	*CTL	[0 or 1 / **0** / -] Alphanumeric 0: ON 1: OFF

System Maintenance

WWW.SERVICE-MANUAL.NET

5055	[Display IP Address]		
	Display or does not display the IP address on the LCD.		
001	-	*CTL	[0 or 1 / **1** / -] 0: OFF 1: ON

5056	[Coverage Counter Display]		
	Display or does not display the coverage counter on the LCD.		
001	-	*CTL	[0 or 1 / **0** / -] 0: Not display, 1: Display

5061	[Toner Remaining Icon Display Change]		
	Display or does not display the remaining toner display icon on the LCD.		
001	-	*CTL	[0 or 1 / **0** / -] 0: Not display, 1: Display

WWW.SERVICE-MANUAL.NET

5062	[Parts Replacement Alert Display]		
	Display or does not display the PM part yield on the LCD.		
001	Drum Unit: Bk	*CTL	[0 or 1 / **1** / -] 0: Not display, 1: Display
002	Drum Unit: M	*CTL	
003	Drum Unit: C	*CTL	
004	Drum Unit: Y	*CTL	
005	Development Unit: Bk	*CTL	[0 or 1 / **1** / -] 0: Not display, 1: Display
006	Development Unit: M	*CTL	
007	Development Unit: C	*CTL	
008	Development Unit: Y	*CTL	
009	Developer: Bk	*CTL	[0 or 1 / **1** / -] 0: Not display, 1: Display
010	Developer: M	*CTL	
011	Developer: C	*CTL	
012	Developer: Y	*CTL	
013	Image Transfer Belt	*CTL	[0 or 1 / **1** / -] 0: Not display, 1: Display
014	Image Transfer Cleaning Unit	*CTL	
015	Fusing Unit	*CTL	
016	Paper Transfer Roller Unit	*CTL	
017	Waster Toner Bottle	*CTL	
018	Fusing Roller (Heating Roller)	*CTL	
019	Pressure Roller	*CTL	

System Maintenance

WWW.SERVICE-MANUAL.NET

5066	[Parts PM Menu Display Setting] Display or does not display the “PM parts” button on the LCD.		
001	-	*CTL	[0 or 1 / **1** / -] 0: Not display, 1: Display

5067	[Parts PM System Setting]		
	Selects the service maintenance or user maintenance for each PM parts. If the user service is selected, PM alart is displayed on the LCD.		
001	PCU (Drum Unit):Bk	*CTL	**[0: Service]** or [1: User]
002	PCU (Drum Unit):M	*CTL	
003	PCU (Drum Unit):C	*CTL	
004	PCU (Drum Unit):Y	*CTL	
005	Dev Unit:Bk	*CTL	**[0: Service]** or [1: User]
006	Dev Unit:M	*CTL	
007	Dev Unit:C	*CTL	
008	Dev Unit:Y	*CTL	
009	Developer:Bk	*CTL	**[0: Service]** or [1: User]
010	Developer:M	*CTL	
011	Developer:C	*CTL	
012	Developer:Y	*CTL	
013	Int Trans Unit	*CTL	**[0: Service]** or [1: User]
014	Belt Cleaning Unit	*CTL	**[0: Service]** or [1: User]

WWW.SERVICE-MANUAL.NET

015	Fusing Unit	*CTL	**[0: Service]** or [1: User]
016	Transfer Roller	*CTL	**[0: Service]** or [1: User]
017	WasteToner Bottle	*CTL	**[0: Service]** or [1: User]
018	Fusing Roller (Heating Roller)	*CTL	**[0: Service]** or [1: User]
019	Pressure Roller	*CTL	**[0: Service]** or [1: User]

5104*	A3/DLT Double Count **(SSP)**
	Specifies whether the counter is doubled for A3/DLT. “Yes” counts except from the bypass tray. When “Yes” is selected, A3 and DLT paper are counted twice, that is A4 x2 and LT x2 respectively.

5071	[Set Bypass Paper Size]		
001	-	*CTL	[0 or 1 / 0 / -] 0: Off, 1: On
	Turn on or off the paper size confirmation pop-up on the LED. This pop-up prevents mismatching between a paper size selected by the operation panel and an actual paper size on the by-pass tray.		

System Maintenance

WWW.SERVICE-MANUAL.NET

5113	[Optional Counter Type]		
001	Default Optional Counter Type	*CTL	This program specifies the counter type. **0**: **None**, 1: Key card (RK 3, 4) 2: Key card (down), 3: Prepaid card 4: Coin rack, 5: MF key card 8: Key counter + Vendor 9: Bar-code Printer
002	External Optional Counter Type	*CTL	This program specifies the external counter type. **0**: **None** 1: Expansion Device 1 2: Expansion Device 2 3: Expansion Device 3

5114	[Optional Counter I/F]		
001	MF Key Card Extension	*CTL	[**0: Not installed/** 1: Installed (scanning accounting)]

5118	[Disable Copying]	*CTL	[**0**: Not disabled/ 1: Disabled]
001	This program disables copying.		

5120	[Mode Clear Opt. Counter Removal]	*CTL	[**0**: **Yes (removed)**/ 1: Standby (installed but not used)/ 2: No (not removed)]
001	This program updates the information on the optional counter. When you install or remove an optional counter, check the settings.		

WWW.SERVICE-MANUAL.NET

5121	[Counter Up Timing]	*CTL	[**0: Feed**/ 1: Exit]
001	This program specifies when the counter goes up. The settings refer to “paper feed” and “paper exit” respectively.		

5126	[F Size Original Setting]	*ENG	[0 to 2 / **0** / 1 /step] 0: 8 1/2" x 13" (Foolscap) 1: 8 1/4" x 13" (Folio) 2: 8" x 13" (F)
001	Selects F size original setting.		

5127	[APS Mode]	*CTL	[**0**: Not disabled/ 1: Disabled]
001	This program disables the APS.		

5131	[Paper Size Type Selection]	*ENG	[0: JP (Japan)/ 1: NA / 2: EU]
001	The program selects a paper size system from the following alternatives: the AB system (0), the LT system (1), and the AF system (2).		

5148	Size Detection Off	*CTL	[**0**: OFF/ 1: ON]
	0: Detecte 1: Not Detecte		

5150	[By-Pass Length Setting]	*CTL	[**0**: OFF/ 1: ON]
001	Determines whether the transfer sheet from the by-pass tray is used or not. Normally the paper length for sub scanning paper from the by-pass tray is limited to 600 mm, but this can be extended with this SP to 1260 mm.		

WWW.SERVICE-MANUAL.NET

5162	[App. Switch Method]	*CTL	[**0**: Soft Key Set/ 1: Hard Key Set]
001	This program specifies the switch that selects an application program.		

5167	[Fax Printing Mode at Optional]		
	Enables or disables the automatic print out without an accounting device. This SP is used when the receiving fax is accounted by an external accounting device.		
001	Fax Printing Mode at Optional Counter Off	*CTL	[0 or 1 / **0** / -] 0: Automatic printing 1: No automatic printing

5169	[CE Login]		
	If you will change the printer bit switches, you must ‘log in’ to service mode with this SP before you go into the printer SP mode.		
001	CE Login	*CTL	[0 or 1 / **0** / -] 0: Disabled 1: Enabled

WWW.SERVICE-MANUAL.NET

5181	[Size Adjust]		
	Adjusts the paper size for each tray.		
001	TRAY 1	*ENG	[0 to 3 / **0 (EU/ASIA), 1 (NA)** / 1 /step] 0: A4 LEF, 1: LT LEF, 2: B5 LEF, 3: A5 LEF
002	TRAY 2: 1	*ENG	[0 or 1 / **0 (EU/ASIA), 1 (NA)** / -] 0: A4 LEF, 1: LT LEF
003	TRAY 2: 2	*ENG	[0 or 1 / **0 (EU/ASIA), 1 (NA)** / -] 0: A3, 1: DLT
004	TRAY 2: 3	*ENG	[0 or 1 / **0 (EU/ASIA), 1 (NA)** / -] 0: B4, 1: LG
005	TRAY 2: 4	*ENG	[0 or 1 / **0 (EU/ASIA), 1 (NA)** / -] 0: B5 LEF, 1: Exe LEF
006	TRAY 3/T-LCT: 1	*ENG	[0 or 1 / **0 (EU/ASIA), 1 (NA)** / -] 0: A4 LEF, 1: LT LEF
007	TRAY 3: 2	*ENG	[0 or 1 / **0 (EU/ASIA), 1 (NA)** / -] 0: A3, 1: DLT
008	TRAY 3: 3	*ENG	[0 or 1 / **0 (EU/ASIA), 1 (NA)** / -] 0: B4, 1: LG
009	TRAY 3: 4	*ENG	[0 or 1 / **0 (EU/ASIA), 1 (NA)** / -] 0: B5 LEF, 1: Exe LEF
010	TRAY 4: 1	*ENG	[0 or 1 / **0 (EU/ASIA), 1 (NA)** / -] 0: A4 LEF, 1: LT LEF
011	TRAY 4: 2	*ENG	[0 or 1 / **0 (EU/ASIA), 1 (NA)** / -] 0: A3, 1: DLT

WWW.SERVICE-MANUAL.NET

012	TRAY 4: 3	*ENG	[0 or 1 / **0 (EU/ASIA), 1 (NA)** / -] 0: B4, 1: LG
013	TRAY 4: 4	*ENG	[0 or 1 / **0 (EU/ASIA), 1 (NA)** / -] 0: B5 LEF, 1: Exe LEF
018	LCT	*ENG	[0 to 2 / **0 (EU/ASIA), 1 (NA)** / -] 0: A4LEF, 1: LTLEF, 2: B5LEF

5186	[RK 4]		
	Enables or disables the prevention for RK4 (accounting device) disconnection. If the RK4 is disconnected for 10 seconds when this SP is set to "1 (Enable)", the machine automatically jams a sheet of paper and stops.		
001	-	*ENG	[0 or 1 / **0** / 1/step] 0: Disable 1: Enable

5188	[Copy NvVersion]		
	Displays the version number of the NVRAM on the controller board.		
001	-	-	-

5193	[External Controller Info. Settings]		
001	-	-	-
	Sets the external controller type. This setting is appropriately adjusted if an external controller is installed in the machine. [0 to 10 / **0** / 1/step] 0: No external controller installed 1: EFI controller 2: Ratio controller 3: Egret controller 4 to 10: Reserved		

WWW.SERVICE-MANUAL.NET

5199	[Paper Exit After Staple End.]		
001	-	*CTL	[0 or 1 / **0** / -] 0: OFF, 1: ON
	Enables or disables the paper feeding out from the finisher without stapling. ▪ If this setting is "1: ON", paper is fed out without stapling at the maximum number of the finisher stapling when the machine gets a multiple printing job (over maximum number). ▪ If this setting is "0: OFF", paper is fed out with stapling at the maximum number of the finisher stapling when the machine gets a multiple printing job (over maximum number).		

5212	[Page Numbering]	*CTL	
	This program adjusts the position of the second side page numbers. A "– value" moves the page number positions to the left edge. A "+ value" moves the page number positions to the right edge.		
003	Duplex Printout Right/Left Position	[–10 to 10 / **0** / 1 mm/step]	
004	Duplex Printout High/Low Position	[–10 to 10 / **0** / 1 mm/step]	

System Maintenance

WWW.SERVICE-MANUAL.NET

5302	[Set Time]		
	Adjusts the RTC (real time clock) time setting for the local time zone. Examples: For Japan (+9 GMT), enter 540 (9 hours x 60 min.) DOM: +540 (Tokyo) NA: -300 (New York) EU: + 60 (Paris) CH: +480 (Peking) TW: +480 (Taipei) AS: +480 (Hong Kong)		
002	Time Difference	*CTL #	[-1440 to 1440 / **Area** / 1 min./step]

5307	[Summer Time]		
001	Setting		[0 to 1 / **NA, EU, ASIA** / 1 /step] 0: Disabled 1: Enabled NA and EUR: 1, ASIA: 0
	Enables or disables the summer time mode. Note ▪ Make sure that both SP5-307-3 and -4 are correctly set. Otherwise, this SP is not activated even if this SP is set to "1".		

WWW.SERVICE-MANUAL.NET

003	Rule Set (Start)		
	Specifies the start setting for the summer time mode. There are 8 digits in this SP. For months 1 to 9, the "0" cannot be input in the first digit, so the eight-digit setting for -2 or -3 becomes a seven-digit setting. 1st and 2nd digits: The month. [1 to 12] 3rd digit: The week of the month. [1 to 5] 4th digit: The day of the week. [0 to 6 = Sunday to Saturday] 5th and 6th digits: The hour. [00 to 23] 7th digit: The length of the advanced time. [0 to 9 / 1 hour /step] 8th digit: The length of the advanced time. [0 to 5 / 10 minutes /step] ▪ The digits are counted from the left. ▪ Make sure that SP5-307-1 is set to "1".		
	For example: 3500010 (EU default) The timer is advanced by 1 hour at am 0:00 on the 5th Sunday in March		
004	Rule Set (End)	-	-
	Specifies the end setting for the summer time mode. There are 8 digits in this SP. 1st and 2nd digits: The month. [1 to 12] 3rd digit: The week of the month. [0 to 5] 4th digit: The day of the week. [0 to 7 = Sunday to Saturday] 5th and 6th digits: The hour. [00 to 23] The 7th and 8 digits must be set to "00". ▪ The digits are counted from the left. ▪ Make sure that SP5-307-1 is set to "1".		

5404	[User Code Count Clear]		
001	UCodeCtrClr		Clears all counters for users.

System Maintenance

WWW.SERVICE-MANUAL.NET

5411	[LDAP Certification]		
004	Easy Certification	*CTL	Determines whether easy LDAP certification is done. [0 or 1 / **1** / -] 1: On, 0: Off
005	Password Null Not Permit	*CTL	This SP is referenced only when SP5411-4 is set to "1" (On). [0 or 1 / **0** / -] 0: Password NULL not permitted. 1: Password NULL permitted.
006	Detail Option	*CTL	Determines whether LDAP option (anonymous certification) is turned on or off. Bit0 **0: OFF**, 1: ON

5413	[Lockout Setting]		
001	Lockout On/Off	*CTL	Switches on/off the lock on the local address book account. [0 or 1 / **0** / -] 0: Off, 1: On
002	Lockout Threshold	*CTL	Sets a limit on the frequency of lockouts for account lockouts. [1 to 10 / **5** / 1/step]

WWW.SERVICE-MANUAL.NET

003	Cancellation On/Off	*CTL	Determines whether the system waits the prescribed time for input of a correct user ID and password after an account lockout has occurred. [0 or 1 / **0** / -] 0: Off (no wait time, lockout not cancelled) 1: On (system waits, cancels lockout if correct user ID and password are entered.
004	Cancellation Time	*CTL	Determines the length of time that the system waits for correct input of the user ID and password after a lockout has occurred. This setting is used only if SP5413-3 is set to "1" (on). [1 to 999 / **60** / 1 min./step]

5414	[Access Mitigation]		
001	Mitigation On/Off	*CTL	Switches on/off masking of continuously used IDs and passwords that are identical. [0 or 1 / **0** / -] 0: Off, 1: On
002	Mitigation Time	*CTL	Sets the length of time for excluding continuous access for identical user IDs and passwords. [0 to 60 / **15** / 1 min./step]

WWW.SERVICE-MANUAL.NET

5415	[Password Attack]		
001	Permissible Number	*CTL	Sets the number of attempts to attack the system with random passwords to gain illegal access to the system. [0 to 100 / **30** / 1 attempt/step]
002	Detect Time	*CTL	Sets the time limit to stop a password attack once such an attack has been detected. [1 to 10 / **5** / 1 sec./step]

5416	[Access Information]		
001	Access User Max Num	*CTL	Limits the number of users used by the access exclusion and password attack detection functions. [50 to 200 / **200** / 1 users/step]
002	Access Password Max Num	*CTL	Limits the number of passwords used by the access exclusion and password attack detection functions. [50 to 200 / **200** / 1 password/step]
003	Monitor Interval	*CTL	Sets the processing time interval for referencing user ID and password information. [1 to 10 / **3** / 1 sec./step]

WWW.SERVICE-MANUAL.NET

5417	[Access Attack]		
001	Access Permissible Number	*CTL	Sets a limit on access attempts when an excessive number of attempts are detected for MFP features. [0 to 500 / **100** / 1/step]
002	Attack Detect Time	*CTL	Sets the length of time for monitoring the frequency of access to MFP features. [10 to 30 / **10** / 1 sec./step]
003	Productivity Fall Wait	*CTL	Sets the wait time to slow down the speed of certification when an excessive number of access attempts have been detected. [0 to 9 / **3** / 1 sec./step]
004	Attack Max Num	*CTL	Sets a limit on the number of requests received for certification in order to slow down the certification speed when an excessive number of access attempts have been detected. [50 to 200 / **200** / 1 attempt/step]

5420	[User Authentication]		
	These settings should be done with the System Administrator. **Note**: These functions are enabled only after the user access feature has been enabled.		
001	Copy	*CTL	Determines whether certification is required before a user can use the copy applications. [0 to 1 / **0** /1] 0: On, 1: Off
002	Color Security Setting	*CTL	-
	Enables or disables the color copy limitation for each copy mode when the user authentication is "ON". **0: Enable (default)**, 1: Disable		

System Maintenance

WWW.SERVICE-MANUAL.NET

	Bit0: B/W mode Bit1: Mono color mode Bit2: Two colors mode Bit3: Full color mode Bit4: Automatic color mode Bit5 to 7: Reserved		
011	DocumentServer	*CTL	Determines whether certification is required before a user can use the document server. [0 or 1/ **0** /1] 0: On, 1: Off
021	Fax	*CTL	Determines whether certification is required before a user can use the fax application. [0 or 1/ **0** /1] 0: On, 1: Off
031	Scanner	*CTL	Determines whether certification is required before a user can use the scan applications. [0 or 1/ **0** /1] 0: On, 1: Off
041	Printer	*CTL	Determines whether certification is required before a user can use the printer applications. [0 or 1/ **0** /1] 0: On, 1: Off
051	SDK1	*CTL	[0 or 1 / **0** / 1] 0: ON. 1: OFF Determines whether certification is required before a user can use the SDK application.
061	SDK2		
071	SDK3		

WWW.SERVICE-MANUAL.NET

5481	[Authentication Error Code]		
	These SP codes determine how the authentication failures are displayed.		
001	System Log Disp	*CTL	Determines whether an error code appears in the system log after a user authentication failure occurs. [0 or 1/ **0** /1] 0: Off, 1: On
002	Panel Disp	*CTL	Determines whether an error code appears on the operation panel after a user authentication failure occurs. [0 or 1/ **1** /1] 1: On, 0: Off

5490	[MF KeyCard (Japan only)]		
001	Job Permit Setting	*CTL	Sets up operation of the machine with a keycard. [0 to 1 / **0** / 1] 0: Disabled. Cancels operation without a user code. 1: Enabled. Allows operation without a user code.
002	Count Mode Setting	*CTL	-

WWW.SERVICE-MANUAL.NET

5501	[PM Alarm]	*CTL	-
001	PM Alarm Level	[0 to 9999 / **0** / 1 /step] 0: Alarm off 1 to 9999: Alarm goes off when **Value (1 to 9999) x 1000 > PM counter**	
002	Original Count Alarm	[0 or 1 / **0** / –] 0: No alarm sounds 1: Alarm sounds after the number of originals passing through the ARDF > 10,000	

5504	[Jam Alarm]	*CTL	-
001	Sets the alarm to sound for the specified jam level (document misfeeds are not included). [0 to 3 / **3** / 1 /step] 0: Zero (Off) 1: Low (2.5K jams) 2: Medium (3K jams) 3: High (6K jams)		

5505	[Error Alarm]		
	Sets the error alarm level. The error alarm counter counts "1" when any SC is detected. However, the error alarm counter decreases by "1" when an SC is not detected during a set number of copied sheets (for example, default 1500 sheets). The error alarm occurs when the SC error alarm counter reaches "5".		
001	-	*CTL	[0 to 255 / **C2.5c: 50, C2d: 60** / 100 copies /step]

WWW.SERVICE-MANUAL.NET

5508*	[CC Call]	*CTL	-
001*	Jam Remains	0: Disable, **1**: Enable	
	Enables/disables initiating a call for an unattended paper jam.		
002*	Continuous Jams	0: Disable, **1**: Enable	
	Enables/disables initiating a call for consecutive paper jams.		
003*	Continuous Door Open	0: Disable, **1**: Enable	
	Enables/disables initiating a call when the front door remains open.		
011*	Jam Detection: Time Length	[3 to 30 / **10** / 1 minute /step]	
	Sets the time a jam must remain before it becomes an “unattended paper jam”. This setting is enabled only when SP5508-004 is set to "1".		
012*	Jam Detection: Continuous Count	[2 to 10 / **5** / 1 /step]	
	Sets the number of consecutive paper jams required to initiate a call. This setting is enabled only when SP5508-004 is set to "1".		
013*	Door Open: Time Length	[3 to 30 / **10** / 1 /step]	
	Sets the length of time the door remains open before the machine initiates a call. This setting is enabled only when SP5-508-004 is set to "1".		

5515	[SC/Alarm Setting]	*CTL	-
	With NRS (New Remote Service) in use, these SP codes can be set to issue an SC call when an SC error occurs. If this SP is switched off, the SC call is not issued when an SC error occurs.		
001	SC Call	[0 or 1 / **1** / -] 0: Off 1: On	
002	Service Parts Near End Call		
003	Service Parts End Call		
004	User Call		

System Maintenance

WWW.SERVICE-MANUAL.NET

006	Communication Test Call	[0 or 1 / **1** / -] 0: Off 1: On
007	Machine Information Notice	
008	Alarm Notice	
009	Non Genuine Tonner Alarm	
010	Supply Automatic Ordering Call	
011	Supply Management Report Call	
012	Jam/Door Open Call	

5516	[Individual PM Part Alarm Call]	*CTL	-
	With @Remote in use, these SP codes can be set to issue an PM alarm call when one of SP parts reaches its yield.		
001	Disable/Enable Setting (0: Not send, 1: Send)		[0 or 1 / **1** / -] 0: Not send, 1: Send
004	Percent yield for triggering PM alert		[1 to 255 / **75** / 1 %/step]

5610	[Base Gamma Control Point: Command]		
004	Factory Setting	-	-
	Recalls the factory settings.		
005	Restore	-	-
	Overwrites the current values onto the factory settings.		
006	Restore	-	-
	Recalls the previous settings.		

WWW.SERVICE-MANUAL.NET

5611	[Toner Color in 2C]		
001	B-C	*ENG	[0 to 128 / **100** / 1 /step] 128: Darkest density
	Adjusts the Cyan correction value of the blue signal in two-color mode.		
002	B-M	*ENG	[0 to 128 / **100** / 1 /step] 128: Darkest density
	Adjusts the Magenta correction value of the blue signal in two-color mode.		
003	G-C	*ENG	[0 to 128 / **100** / 1 /step] 128: Darkest density
	Adjusts the Cyan correction value of the blue signal in two-color mode.		
004	G-Y	*ENG	[0 to 128 / **100** / 1 /step] 128: Darkest density
	Adjusts the Yellow correction value of the blue signal in two-color mode.		
005	R-M	*ENG	[0 to 128 / **100** / 1 /step] 128: Darkest density
	Adjusts the Magenta correction value of the blue signal in two-color mode.		
006	R-Y	*ENG	[0 to 128 / **100** / 1 /step] 128: Darkest density
	Adjusts the Yellow correction value of the blue signal in two-color mode.		

WWW.SERVICE-MANUAL.NET

5618	[Color Mode Display Selection]		
001	-	*CTL	[0 or 1 / **1** / -] 0: ACS, Colour, Black & White, Two Colour, Single colour 1: ACD, Full Colour, Black & White
	Selects the color selection display on the LCD.		

Note

- Memory Clear (SP5-801)
- The following tables list the items that are cleared. The serial number information, meter charge setting and meter charge counters (SP8-581, 582, 583, 584, and 586) are not cleared.

5801	[Memory Clear]	
001	All Clear	Resets all correction data for process control and all software counters, and returns all modes and adjustments to their default values.
002	Engine	Clears the engine settings.
003	SCS	Initializes default system settings, SCS (System Control Service) settings, operation display coordinates, and ROM update information.
004	IMH Memory Clr	Initializes the IMH settings.
005	Mcs	Initializes the Mcs settings.
006	Copier Application	Initializes all copier application settings.
007	Fax Application	Initializes the fax reset time, job login ID, all TX/RX settings, local storage file numbers, and off-hook timer.

WWW.SERVICE-MANUAL.NET

008	Printer Application	The following service settings: ▪ Bit switches ▪ Gamma settings (User & Service) ▪ Toner Limit The following user settings: ▪ Tray Priority ▪ Menu Protect ▪ System Setting except for setting of Energy Saver ▪ I/F Setup (I/O Buffer and I/O Timeout) ▪ PCL Menu
009	Scanner Application	Initializes the scanner defaults for the scanner and all the scanner SP modes.
010	Web Service	Deletes the network file application management files and thumbnails, and initializes the job login ID.
011	NCS	All setting of Network Setup (User Menu) (NCS: Network Control Service)
012	R-Fax	Initializes the job login ID, SmartDeviceMonitor for Admin, job history, and local storage file numbers.
014	Clear DCS Setting	Initializes the DCS (Delivery Control Service) settings.
015	Clear UCS Setting	Initializes the UCS (User Information Control Service) settings.
016	MIRS Setting	Initializes the MIRS (Machine Information Report Service) settings.
017	CCS	Initializes the CCS (Certification and Charge-control Service) settings.

WWW.SERVICE-MANUAL.NET

018	SRM Memory Clr	Initializes the SRM (System Resource Manager) settings.
019	LCS	Initializes the LCS settings.
020	Web Uapli	Initializes the web user application settings.
021	ECS	Initializes the ECS settings.

5802	[FreeRun]		
	Performs a free run on the copier engine. Note ▪ The machine starts free run in the same condition as the sequence of A4/LT, A3 or A4 SEF printing from the 1st or 2nd tray. Therefore, the correct paper should be loaded in the 1st tray or 2nd tray, but paper is not fed. ▪ The main switch has to be turned off and on after using the free run mode for a test.		
001	B/W A4 LEF	-	-
002	FC A4 LEF	-	
003	FC A3 LEF	-	

5803	[Input Check]	-	See p.5-308 "Main SP Tables-9" in this section.
5804	[Output Check]	-	See p.5-308 "Main SP Tables-9" in this section.

WWW.SERVICE-MANUAL.NET

5805	[Anti-Condensation Heater]		
002	0:OFF / 1:ON	*ENG	-

5810	[SC Reset]		
	Resets a type A service call condition. Note ▪ Turn the main switch off and on after resetting the SC code.		
001	Fusing SC Reset	-	-

5811	[MachineSerial] Machine Serial Number Display		
002	Display		Displays the machine serial number.
004	BICU	Inputs	

5812	[Service Tel. No. Setting]		
001	Service	*CTL	-
	Sets the telephone number for a service representative. This number is printed on the Counter List, which can be printed with the user's "Counter" menu. This can be up to 20 characters (both numbers and alphabetic characters can be input).		
002	Facsimile	*CTL	-
	Sets the fax or telephone number for a service representative. This number is printed on the Counter List. This can be up to 20 characters (both numbers and alphabetic characters can be input).		

System Maintenance

WWW.SERVICE-MANUAL.NET

003	Supply	*CTL	-
	Use this to input the telephone number of your supplier for consumables. Enter the number and press #.		
004	Operation	*CTL	-
	Use this to input the telephone number of your sales agency. Enter the number and press #.		

5816	[Remote Service]	*CTL	**-**
001	I/F Setting		
	Selects the remote service setting. [0 to 2 / **2** / 1 /step] 0: Remote service off 1: CSS remote service on 2: NRS remote service on		
002	CE Call		
	Performs the CE Call at the start or end of the service. [0 or 1 / **0** / 1 /step] 0: Start of the service 1: End of the service **NOTE:** This SP is activated only when SP 5816-001 is set to “2”.		
003	Function Flag		
	Enables or disables the remote service function. [0 to 1 / **0** / 1 /step] 0: Disabled 1: Enabled		

WWW.SERVICE-MANUAL.NET

007	SSL Disable	
	Controls if RCG (Remote Communication Gate) confirmation is done by SSL during an RCG send for the @Remote over a network interface. [0 or 1 / **0** / 1 /step] 0: Yes. SSL not used. 1: No. SSL used.	
008	RCG Connect Timeout	
	Sets the length of time (seconds) for the time-out when the RCG (Remote Communication Gate) connects during a call via the @Remote network. [1 to 90 / **30** / 1 second /step]	
009	RCG Write Timeout	
	Sets the length of time (seconds) for the time-out when sent data is written to the RCG during a call over the @Remote network. [1 to 100 / **60** / 1 second /step]	
010	RCG Read Timeout	
	Sets the length of time (seconds) for the timeout when sent data is written from the RCG during a call over the @Remote network. [1 to 100 / **60** / 1 second /step]	
011	Port 80 Enable	-
	Controls if permission is given to get access to the SOAP method over Port 80 on the @Remote network. [0 or 1 / **0** / –] 0: No. Access denied 1: Yes. Access granted.	

WWW.SERVICE-MANUAL.NET

013	RFU Timing	
	Selects the timing for the remote firmware updating. [0 or 1 / **1** / –] 0: Any status of a target machine 1: Sleep or panel off mode only	
021	RCG – C Registed	
	This SP displays the RCG-N installation end flag. 0: Installation not completed 1: Installation completed	
023	Connect Type (N/M)	
	This SP displays and selects the RCG-N connection method. [0 or 1 / **0** / 1 /step 0: Internet connection 1: Dial-up connection	
061	Cert. Expire Timing **DFU**	Proximity of the expiration of the certification.
062	Use Proxy	This SP setting determines if the proxy server is used when the machine communicates with the service center.
063	Proxy Host	
	This SP sets the address of the proxy server used for communication between the RCG device and the gateway. Use this SP to set up or display the customer proxy server address. The address is necessary to set up the embedded RCG-N. Note ▪ The address display is limited to 128 characters. Characters beyond the 128 character are ignored. ▪ This address is customer information and is not printed in the SMC report.	

WWW.SERVICE-MANUAL.NET

064	Proxy PortNumber	
	This SP sets the port number of the proxy server used for communication between the embedded RCG-N and the gateway. This setting is necessary to set up the embedded RC Gate-N. Note ▪ This port number is customer information and is not printed in the SMC report.	
065	Proxy User Name	
	This SP sets the HTTP proxy certification user name. Note ▪ The length of the name is limited to 31 characters. Any character beyond the 31st character is ignored. ▪ This name is customer information and is not printed in the SMC report.	
066	Proxy Password	
	This SP sets the HTTP proxy certification password. Note ▪ The length of the password is limited to 31 characters. Any character beyond the 31st character is ignored. ▪ This name is customer information and is not printed in the SMC report.	
067	CERT:Up State	
	Displays the status of the certification update.	
	0	The certification used by RCG-N is set correctly.
	1	The certification request (setAuthKey) for update has been received from the GW URL and certification is presently being updated.
	2	The certification update is completed and the GW URL is being notified of the successful update.
	3	The certification update failed, and the GW URL is being notified of the failed update.

System Maintenance

WWW.SERVICE-MANUAL.NET

	4	The period of the certification has expired and new request for an update is being sent to the GW URL.
	11	A rescue update for certification has been issued and a rescue certification setting is in progress for the rescue GW connection.
	12	The rescue certification setting is completed and the GW URL is being notified of the certification update request.
	13	The notification of the request for certification update has completed successfully, and the system is waiting for the certification update request from the rescue GW URL.
	14	The notification of the certification request has been received from the rescue GW controller, and the certification is being stored.
	15	The certification has been stored, and the GW URL is being notified of the successful completion of this event.
	16	The storing of the certification has failed, and the GW URL is being notified of the failure of this event.
	17	The certification update request has been received from the GW URL, the GW URL was notified of the results of the update after it was completed, but an certification error has been received, and the rescue certification is being recorded.
	18	The rescue certification of No. 17 has been recorded, and the GW URL is being notified of the failure of the certification update.

WWW.SERVICE-MANUAL.NET

068	CERT:Error	
	Displays a number code that describes the reason for the request for update of the certification.	
	0	Normal. There is no request for certification update in progress.
	1	Request for certification update in progress. The current certification has expired.
	2	An SSL error notification has been issued. Issued after the certification has expired.
	3	Notification of shift from a common authentication to an individual certification.
	4	Notification of a common certification without ID2.
	5	Notification that no certification was issued.
	6	Notification that GW URL does not exist.
069	CERT:Up ID	The ID of the request for certification.
083	FirmUp Status	Displays the status of the firmware update.
085	Firm Up User Check	This SP setting determines if the operator can confirm the previous version of the firmware before the firmware update execution. If the option to confirm the previous version is selected, a notification is sent to the system manager and the firmware update is done with the firmware files from the URL.
086	Firmware Size	Allows the service technician to confirm the size of the firmware data files during the firmware update execution.
087	CERT: Macro Version	Displays the macro version of the @Remote certification.

WWW.SERVICE-MANUAL.NET

088	CERT: PAC Version	Displays the PAC version of the @Remote certification.
089	CERT: ID2 Code	Displays ID2 for the @Remote certification. Spaces are displayed as underscores (_). Asteriskes (****) indicate that no @Remote certification exists.
090	CERT: Subject	Displays the common name of the @Remote certification subject. CN = the following 17 bytes. Spaces are displayed as underscores (_). Asterisks (****) indicate that no DESS exists.
091	CERT: Serial Number	Displays serial number for the NRS certification. Asterisks (****) indicate that no DESS exists.
092	CERT: Issuer	Displays the common name of the issuer of the @Remote certification. CN = the following 30 bytes. Asteriskes (****)indicate that no DESS exists.
093	CERT: Valid Start	Displays the start time of the period for which the current @Remote certification is enabled.
094	CERT: Valid End	Displays the end time of the period for which the current @Remote certification is enabled.
150	Selection Country	
	Select the country where embedded RCG-M is installed in the machine. After selecting the country, you must also set the following SP codes for embedded RCG-M: ▪ SP5816-153 ▪ SP5816-154 ▪ SP5816-161 0: Japan, 1: USA, 2: Canada, 3: UK, 4: Germany, 5: France, 6: Italy, 7: Netherlands, 8: Belgium, 9: Luxembourg, 10: Spain	

WWW.SERVICE-MANUAL.NET

151	Line Type AutomaticJudgment
	Press [Execute]. Setting this SP classifies the telephone line where embedded RCG-M is connected as either dial-up (pulse dial) or push (DTMF tone) type, so embedded RCG-M can automatically distinguish the number that connects to the outside line. ▪ The current progress, success, or failure of this execution can be displayed with SP5816-152. ▪ If the execution succeeded, SP5816-153 will display the result for confirmation and SP5816-154 will display the telephone number for the connection to the outside line.
152	Line Type Judgment Result
	Displays a number to show the result of the execution of SP5816 151. Here is a list of what the numbers mean. 0: Success 1: In progress (no result yet). Please wait. 2: Line abnormal 3: Cannot detect dial tone automatically 4: Line is disconnected 5: Insufficient electrical power supply 6: Line classification not supported 7: Error because fax transmission in progress – ioctl() occurred. 8: Other error occurred 9: Line classification still in progress. Please wait.

WWW.SERVICE-MANUAL.NET

153	Selection Dial/Push
	This SP displays the classification (tone or pulse) of the telephone line to the access point for embedded RCG-M. The number displayed (0 or 1) is the result of the execution of SP5816-151. However, this setting can also be changed manually. [0 or 1 / **0** / 1 /step] 0: Tone Dialing Phone 1: Pulse Dialing Phone Inside Japan "2" may also be displayed: 0: Tone Dialing Phone 1: Pulse Dialing Phone 10PPS 2: Pulse Dialing Phone 20PPS
154	Outside LineOutgoing Number
	The SP sets the number that switches to PSTN for the outside connection for embedded RCG-M in a system that employs a PBX (internal line). ▪ If the execution of SP5816-151 has succeeded and embedded RCG-M has connected to the **external** line, this SP display is completely blank. ▪ If embedded RCG-M has connected to an **internal** line, then the number of the connection to the external line is displayed. ▪ If embedded RCG-M has connected to an external line, a comma is displayed with the number. The comma is inserted for a 2 sec. pause. ▪ The number setting for the external line can be entered manually (including commas).
156	Dial Up User Name
	Use this SP to set a user name for access to remote dial up. Follow these rules when setting a user name: ▪ Name length: Up to 32 characters ▪ Spaces and # allowed but the entire entry must be enclosed by double quotation marks ('').

WWW.SERVICE-MANUAL.NET

157	Dial Up Password
	Use this SP to set a password for access to remote dial up. Follow these rules when setting a user name: ▪ Name length: Up to 32 characters ▪ Spaces and # allowed but the entire entry must be enclosed by double quotation marks ('').
161	Local Phone Number
	Use this SP to set the telephone number of the line where embedded RCG-M is connected. This number is transmitted to and used by the Call Center to return calls. Limit: 24 numbers (numbers only)
162	Connection Timing Adjustment: Incoming
	When the Call Center calls out to an embedded RCG-M modem, it sends a repeating ID tone (*#1#). This SP sets the time the line remains open to send these ID tones after the number of the embedded RCG-M modem is dialed up and connected. [0 to 24 / **1** / 1 /step] The actual amount of time is this setting x 2 sec. For example, if you set "2" the line will remain open for 4 sec.
163	Access Point
	This is the number of the dial-up access point for RCG-M. If no setting is done for this SP code, then a preset value (determined by the country selected) is used. Default: 0 Allowed: Up to 16 alphanumeric characters
164	Line Connecting
	This SP sets the connection conditions for the customer. This setting dedicates the line to RCG-M only, or sets the line for sharing between RCG-M and a fax unit. [0 to 1 / **0** / 1 /step] 0: Sharing Fax 1: No Sharing Fax

System Maintenance

WWW.SERVICE-MANUAL.NET

	Note ▪ If this setting is changed, the copier must be cycled off and on. ▪ SP5816 187 determines whether the off-hook button can be used to interrupt a RCG-M transmission in progress to open the line for fax transaction.		
173	Modem Serial Number	This SP displays the serial number registered for the RCG-M.	
174	Retransmission Limit		
	Normally, it is best to allow unlimited time for certification and ID2 update requests, and for the notification that the certification has been completed. However, RCG-M generates charges based on transmission time for the customer, so a limit is placed upon the time allowed for these transactions. If these transactions cannot be completed within the allowed time, do this SP to cancel the time restriction.		
187	FAX TX Priority	-	
	This SP determines whether pushing the off-hook button will interrupt a RCG-M transmission in progress to open the line for fax transaction. This SP can be used only if SP5816 164 is set to "0". [0 or 1/ **0** / -] 0: Disable, 1: Enable		
200	Manual Polling	-	Executes the manual polling.

WWW.SERVICE-MANUAL.NET

201	Regist: Status	
	Displays a number that indicates the status of the @Remote service device. 0: Neither the registered device by the external nor embedded RCG device is set. 1: The embedded RCG device is being set. Only Box registration is completed. In this status, this unit cannot answer a polling request from the external RCG. 2. The embedded RCG device is set. In this status, the external RCG unit cannot answer a polling request. 3. The registered device by the external RCG is being set. In this status the embedded RCG device cannot be set. 4 The registered module by the external RCG has not started.	
202	Letter Number	Allows entry of the number of the request needed for the RCG-N device.
203	Confirm Execute	Executes the inquiry request to the @Remote GW URL.
204	Confirm Result	
	Displays a number that indicates the result of the inquiry executed with SP5816 203. 0: Succeeded 1: Inquiry number error 2: Registration in progress 3: Proxy error (proxy enabled) 4: Proxy error (proxy disabled) 5: Proxy error (Illegal user name or password) 6: Communication error 7: Certification update error 8: Other error 9: Inquiry executing	

WWW.SERVICE-MANUAL.NET

205	Confirm Place		
	Displays the result of the notification sent to the device from the GW URL in answer to the inquiry request. Displayed only when the result is registered at the GW URL.		
206	Register Execute	Executes "Embedded RCG Registration".	
207	Register Result		
	Displays a number that indicates the registration result. 0: Succeeded 2: Registration in progress 3: Proxy error (proxy enabled) 4: Proxy error (proxy disabled) 5: Proxy error (Illegal user name or password) 6: Communication error 7: Certification update error 8: Other error 9: Registration executing		
208	Error Code		
	Displays a number that describes the error code that was issued when either SP5816-204 or SP5816-207 was executed.		
	Cause	**Code**	**Meaning**
	Illegal Modem Parameter	-11001	Chat parameter error
		-11002	Chat execution error
		-11003	Unexpected error
	Operation Error, Incorrect Setting	-12002	Inquiry, registration attempted without acquiring device status.
		-12003	Attempted registration without execution of an inquiry and no previous registration.
		-12004	Attempted setting with illegal entries for certification and ID2.

WWW.SERVICE-MANUAL.NET

		-12005	@Remote communication is prohibited. The device has an Embedded RC gate-related problem.
	Operation Error, Incorrect Setting	-12006	A confirmation request was made after the confirmation had been already completed.
		-12007	The request number used at registration was different from the one used at confirmation.
		-12008	Update certification failed because mainframe was in use.
		-12009	ID2 mismatch between an individual certification and NVRAM
		-12010	Certification area is not initialized.
	Error Caused by Response from GW URL	-2385	Attempted dial up overseas without the correct international prefix for the telephone number.
		-2387	Not supported at the Service Center
		-2389	Database out of service
		-2390	Program out of service
		-2391	Two registrations for same device
		-2392	Parameter error
		-2393	Basil not managed
		-2394	Device not managed
		-2395	Box ID for Basil is illegal
		-2396	Device ID for Basil is illegal
		-2397	Incorrect ID2 format
		-2398	Incorrect request number format

WWW.SERVICE-MANUAL.NET

209	Instal Clear	Releases the machine from its embedded RCG setup.
250	CommLog Print	Prints the communication log.

5821	[Remote Service Address]		
002	RCG IP Address	*CTL	Sets the IP address of the RCG (Remote Communication Gate) destination for call processing at the remote service center.

5824	[NV-RAM Data Upload]		
	Uploads the UP and SP mode data (except for counters and the serial number) from the NVRAM to an SD card. For details, see the "NVRAM Data Upload/Download" in this section.		
001	NV-RAM Data Upload	#	-

5825	[NV-RAM Data Download]		
	Downloads the UP and SP mode data from an SD card to the NVRAM. For details, see the "NVRAM Data Upload/Download" in this section.		
001	NV-RAM Download	#	-

5828	[Network Setting]	*CTL	**-**
050	1284 Compatibility (Centro)	Enables or disables 1284 Compatibility. [0 or 1 / **1** / 1 / step] 0: Disabled, 1: Enabled	
052	ECP (Centro)	Enables or disables ECP Compatibility. [0 or 1 / **1** / 1 / step] 0: Disabled, 1: Enabled Note ▪ This SP is activated only when SP5-828-50 is set to "1".	

WWW.SERVICE-MANUAL.NET

065	Job Spooling	Enables/disables Job Spooling. [0 or 1 / **0** / 1 / step] 0: Disabled, 1: Enabled
066	Job Spooling Clear: Start Time	Treatment of the job when a spooled job exists at power on. 0: ON (Data is cleared) **1**: OFF (Automatically printed)
069	Job Spooling (Protocol)	Validates or invalidates the job spooling function for each protocol. **0**: Validates 1: Invalidates bit0: LPR bit1: FTP bit2: IPP bit3: SMB bit4: BMLinkS bit5: DIPRINT bit6: sftp bit7: (Reserved)
090	TELNET (0: OFF 1: ON)	Enables or disables the Telnet protocol. [0 or 1 / **1** / –] 0: Disable, 1: Enable
091	Web (0: OFF 1: ON)	Enables or disables the Web operation. [0 or 1 / **1** / –] 0: Disable, 1: Enable
145	Active IPv6 Link Local Address	This is the IPv6 local address link referenced on the Ethernet or wireless LAN (802.11b) in the format: "Link Local Address" + "Prefix Length" The IPv6 address consists of a total 128 bits configured in 8 blocks of 16 bits each.

WWW.SERVICE-MANUAL.NET

147	Active IPv6 Stateless Address 1	These SPs are the IPv6 status addresses (1 to 5) referenced on the Ethernet or wireless LAN (802.11b) in the format: "Status Address" + "Prefix Length" The IPv6 address consists of a total 128 bits configured in 8 blocks of 16 bits each.
149	Active IPv6 Stateless Address 2	
151	Active IPv6 Stateless Address 3	
153	Active IPv6 Stateless Address 4	
155	Active IPv6 Stateless Address 5	
156	IPv6 Manual Address	This SP is the IPv6 manually set address referenced on the Ethernet or wireless LAN (802.11b) in the format: "Manual Set Address" + "Prefix Length" The IPv6 address consists of a total 128 bits configured in 8 blocks of 16 bits each.
158	IPv6 Gateway Address	This SP is the IPv6 gateway address referenced on the Ethernet or wireless LAN (802.11b). The IPv6 address consists of a total 128 bits configured in 8 blocks of 16 bits each.
161	IPv6 Stateless Auto Setting	Enables or disables the automatic setting for IPv6 stateless. [0 or 1 / **1** / 1 /step] 0: Disable, 1: Enable

WWW.SERVICE-MANUAL.NET

236	Web Item visible	Displays or does not display the Web system items. [0 x 0000 to 0 x ffff / **0 x ffff**] 0: Not displayed, 1: Displayed bit0: Net RICOH bit1: Consumable Supplier bit2-15: Reserved (all)
237	Web shopping link visible	Displays or does not display the link to Net RICOH on the top page and link page of the web system. [0 to 1 / **1** / 1] 0: Not display, 1:Display
238	Web supplies Link visible	Displays or does not display the link to Consumable Supplier on the top page and link page of the web system. [0 to 1 / **1** / 1] 0: Not display, 1:Display
239	Web Link1 Name	This SP confirms or changes the URL1 name on the link page of the web system. The maximum characters for the URL name are 31 characters.
240	Web Link1 URL	This SP confirms or changes the link to URL1 on the link page of the web system. The maximum characters for the URL are 127 characters.
241	Web Link1 visible	Displays or does not display the link to URL1 on the top page of the web system. [0 to 1 / **1** / 1] 0: Not display, 1:Display
242	Web Link2 Name	Same as "-239"
243	Web Link2 URL	Same as "-240"
244	Web Link2 visible	Same as "-241"

WWW.SERVICE-MANUAL.NET

5832	[HDD] HDD Initialization	*CTL	-
001	HDD Formatting (ALL)	Initializes the hard disk. Use this SP mode only if there is a hard disk error.	
002	HDD Formatting (IMH)		
003	HDD Formatting (Thumbnail)		
004	HDD Formatting (Job Log)		
005	HDD Formatting (Printer Fonts)		
006	HDD Formatting (User Info)		
007	Mail RX Data		
008	Mail TX Data		
009	HDD Formatting (Data for a Design)		
010	HDD Formatting (Log)		
011	HDD Formatting (Ridoc I/F)		

5836	[Capture Settings]	*CTL	-
001	Capture Function (0:Off 1:On)		**0**: Disable, 1: Enable
	With this function disabled, the settings related to the capture feature cannot be initialized, displayed, or selected.		
002	Panel Setting		**0**: Displayed, 1: Not displayed
	Displays or does not display the capture function buttons.		
	5836-71 to 5836-78, Copier and Printer Document Reduction The following 6 SP modes set the default reduction for stored documents sent to the document management server via the MLB. Enabled only when optional MLB (Media Link Board) is installed.		

WWW.SERVICE-MANUAL.NET

071	Reduction for Copy Color	0: 1to-1, 1: 1/2, **2: 1/3**, 3: 1/4
072	Reduction for Copy B&W Text	**0: 1to-1**, 1: 1/2, 2: 1/3, 3: 1/4, 6: 2/3
073	Reduction for Copy B&W Other	**0: 1to-1**, 1: 1/2, 2: 1/3, 3: 1/4, 6: 2/3
074	Reduction for Printer Color	0: 1to-1, 1: 1/2, **2: 1/3**, 3: 1/4
075	Reduction for Printer B&W	**0: 1to-1**, 1: 1/2, 2: 1/3, 3: 1/4, 6: 2/3
076	Reduction for Printer B&W HQ	**0: 1to-1**, 1: 1/2, 2: 1/3, 3: 1/4
077	Reduction for Printer Color 1200	1: 1/2, 3: 1/4, **4: 1/6**, 5: 1/8 (2: skipped) , 6: 2/3
078	Reduction for Printer B&W 1200	**1: 1/2**, 3: 1/4, 4: 1/6, 5: 1/8 (2: skipped) , 6: 2/3
	5836-81 to 5836-86, Stored document format The following 6 SP modes set Sets the default format for stored documents sent to the document management server via the MLB. Enabled only when optional MLB (Media Link Board) is installed.	
081	Format for Copy Color	**0: JFIF/JPEG**, 1: TIFF/MMR, 2: TIFF/MH, 3: TIFF/MR Note ▪ This SP is not used in this model.
082	Format for Copy B&W Text	0: JFIF/JPEG, **1: TIFF/MMR**, 2: TIFF/MH, 3: TIFF/MR
083	Format Copy B&W Other	0: JFIF/JPEG, **1: TIFF/MMR**, 2: TIFF/MH, 3: TIFF/MR

WWW.SERVICE-MANUAL.NET

084	Format for Printer Color	**0: JFIF/JPEG**, 1: TIFF/MMR, 2: TIFF/MH, 3: TIFF/MR Note ▪ This SP is not used in this model.
085	Format for Printer B&W	0: JFIF/JPEG, **1: TIFF/MMR**, 2: TIFF/MH, 3: TIFF/MR
086	Format for Printer B&W HQ	0: JFIF/JPEG, 1: TIFF/MMR, **2: TIFF/MH**, 3: TIFF/MR
091	Default for JPEG	[5 to 95 / **50** / 1 /step]
	Sets the JPEG format default for documents sent to the document management server via the MLB with JPEG selected as the format. Enabled only when optional MLB (Media Link Board) is installed.	
101	Primary srv IP address	Sets the IP address for the primary capture server. This is basically adjusted by the remote system.
102	Primary srv scheme	This is basically adjusted by the remote system.
103	Primary srv port number	This is basically adjusted by the remote system.
104	Primary srv URL path	This is basically adjusted by the remote system.
111	Secondary srv IP address	Sets the IP address for the secondary capture server. This is basically adjusted by the remote system.
112	Secondary srv scheme	This is basically adjusted by the remote system.
113	Secondary srv port number	This is basically adjusted by the remote system.

WWW.SERVICE-MANUAL.NET

114	Secondary srv URL path	This is basically adjusted by the remote system.
120	Default Reso Rate Switch	This is basically adjusted by the remote system.
121	Reso: Copy (Color)	[0 to 3 / **2** / 1/step]
	Selects the resolution for color copy mode. This is basically adjusted by the remote system. 0: 600dpi/ 1: 300dpi/ 2: 150dpi/ 3: 75dpi	
122	Reso: Copy (Mono)	[0 to 5 / **3** / 1/step]
	Selects the resolution for BW copy mode. This is basically adjusted by the remote system. 0: 600dpi/ 1: 400dpi/ 2: 300dpi/ 3: 200dpi/ 4: 150dpi/ 5: 100dpi	
123	Reso: Print (Color)	This is basically adjusted by the remote system. [0 to 3 / **2** / 1/step]
	Selects the resolution for color print mode. This is basically adjusted by the remote system. 0: 600dpi/ 1: 300dpi/ 2: 150dpi/ 3: 75dpi	
124	Reso: Print (Mono)	This is basically adjusted by the remote system. [0 to 5 / **3** / 1/step]
	Selects the resolution for BW print mode. This is basically adjusted by the remote system. 0: 600dpi/ 1: 400dpi/ 2: 300dpi/ 3: 200dpi/ 4: 150dpi/ 5: 100dpi	
125	Reso: Fax (Color)	This is basically adjusted by the remote system. [0 to 6 / **4** / 1/step]
	Selects the resolution for color fax mode. This is basically adjusted by the remote system. 0: 600dpi/ 1: 400dpi/ 2: 300dpi/ 3: 200dpi/ 4: 150dpi/ 5: 100dpi/ 6: 75dpi	

WWW.SERVICE-MANUAL.NET

126	Reso: Fax (Mono)	This is basically adjusted by the remote system. [0 to 6 / **3** / 1/step]
	Selects the resolution for BW fax mode. This is basically adjusted by the remote system. 0: 600dpi/ 1: 400dpi/ 2: 300dpi/ 3: 200dpi/ 4: 150dpi/ 5: 100dpi/ 6: 75dpi	
127	Reso: Scan (Color)	This is basically adjusted by the remote system. [0 to 6 / **4** / 1/step]
	Selects the resolution for color scanning mode. This is basically adjusted by the remote system. 0: 600dpi/ 1: 400dpi/ 2: 300dpi/ 3: 200dpi/ 4: 150dpi/ 5: 100dpi/ 6: 75dpi	
128	Reso: Scan (Mono)	This is basically adjusted by the remote system. [0 to 6 / **3** / 1/step]
	Selects the resolution for BW scanning mode. This is basically adjusted by the remote system. 0: 600dpi/ 1: 400dpi/ 2: 300dpi/ 3: 200dpi/ 4: 150dpi/ 5: 100dpi/ 6: 75dpi	

5840	[IEEE 802.11]		
006	Channel Max	*CTL	[1 to 11 or 13 / **11 or 13** / 1 /step] Europe/Asia: 1 to 13 NA/ Asia: 1 to 11
	Sets the maximum number of channels available for data transmission via the wireless LAN. The number of channels available varies according to location. The default settings are set for the maximum end of the range for each area. Adjust the upper 4 bits to set the maximum number of channels. **DFU** Note ▪ Do not change the setting.		

WWW.SERVICE-MANUAL.NET

007	Channel Min	*CTL	[1 to 11 or 13 / **1** / 1 /step] Europe: 1 to 13 NA/ Asia: 1 to 11
	Sets the minimum number of channels available for data transmission via the wireless LAN. The number of channels available varies according to location. The default settings are set for the minimum end of the range for each area. Adjust the lower 4 bits to set the minimum number of channels. **DFU** Note ▪ Do not change the setting.		
008	Transmission Speed	*CTL	0 x 00 to 0 x FF / **0 x FF to Auto** / -] **0 x FF to Auto** [Default] 0 x 11 - 55M Fix 0 x 10 - 48M Fix 0 x 0F - 36M Fix 0 x 0E - 18M Fix 0 x 0D - 12M Fix 0 x 0B - 9M Fix 0 x 0A - 6M Fix 0 x 07 - 11M Fix 0 x 05 - 5.5M Fix 0 x 08 - 1M Fix 0 x 13 - 0 x FE (reserved) 0 x 12 - 72M (reserved) 0 x 09 - 22M (reserved)
011	WEP key Select	*CTL	Selects the WEP key. [00 to 11 / **00** / 1 binary] 00: Key #1 01: Key #2 (Reserved) 10: Key #3 (Reserved) 11: Key #4 (Reserved)

System Maintenance

WWW.SERVICE-MANUAL.NET

042	Fragment Thresh	*CTL	Adjusts the fragment threshold for the IEEE802.11 card. [256 to 2346 / **2346** / 1] This SP is displayed only when the IEEE802.11 card is installed.
043	11g CTS to Self	*CTL	Determines whether the CTS self function is turned on or off. [0 to 1 / **1** / 1] 0: Off, 1: On This SP is displayed only when the IEEE802.11 card is installed.
044	11g Slot Time	*CTL	Selects the slot time for IEEE802.11. [0 to 1 / 0 / 1] 0: 20 μm, 1: 9 μm
045	WPA Debug Lvl	*CTL	Selects the debug level for WPA authentication application. [1 to 3 / **3** / 1] 1: Info, 2: warning, 3: error This SP is displayed only when the IEEE802.11 card is installed.

WWW.SERVICE-MANUAL.NET

5841	[Supply Name Setting]		
001	Toner Name Setting: Black	*CTL	Specifies supply names. These appear on the screen when the user presses the Inquiry button in the user tools screen.
002	Toner Name Setting: Cyan		
003	Toner Name Setting: Yellow		
004	Toner Name Setting: Magenta		
007	OrgStamp		
011	Staple Std1		
012	Staple Std2		
013	Staple Std3		
014	Staple Std4		
021	Staple Bind 1		
022	Staple Blind2		
023	Staple Blind 3		

5844	[USB]		
001	Transfer Rate	*CTL	0x01: Full speed **0x04: Auto Change**
	Adjusts the USB transfer rate.		
002	Vendor ID	*CTL	Displays the vendor ID. **DFU**
003	Product ID	*CTL	Displays the product ID. **DFU**
004	Device Release Number	*CTL	Displays the development release version number. **DFU**

System Maintenance

WWW.SERVICE-MANUAL.NET

5845	[Delivery Server Setting]	*CTL	-
	Provides items for delivery server settings.		
001	FTP Port No.	[0 to 65535 / **3670** / 1 /step]	
	Sets the FTP port number used when image files to the Scan Router Server.		
002	IP Address (Primary)	Range: **000.000.000.000** to 255.255.255.255	
	Use this SP to set the Scan Router Server address. The IP address under the transfer tab can be referenced by the initial system setting.		
006	Delivery Error Display Time	[0 to 999 / **300** / 1 second /step]	
	Use this setting to determine the length of time the prompt message is displayed when a test error occurs during document transfer with the NetFile application and an external device.		
008	IP Address (Secondary)	Range: **000.000.000.000** to 255.255.255.255	
	Specifies the IP address assigned to the computer designated to function as the secondary delivery server of Scan Router. This SP allows only the setting of the IP address without reference to the DNS setting.		
009	Delivery Server Model	[0 to 4/ **0** / 1 /step]	
	Allows changing the model of the delivery server registered by the I/O device. 0: Unknown 1: SG1 Provided 2: SG1 Package 3: SG2 Provided 4: SG2 Package		

WWW.SERVICE-MANUAL.NET

010	Delivery Svr. Capability	[0 to 255 / **0** / 1 /step]	
	Bit7 = 1 Comment information exits		Changes the capability of the registered that the I/O device registered.
	Bit6 = 1 Direct specification of mail address possible		
	Bit5 = 1 Mail RX confirmation setting possible		
	Bit4 = 1 Address book automatic update function exists		
	Bit3 = 1 Fax RX delivery function exists		
	Bit2 = 1 Sender password function exists		
	Bit1 = 1 Function to link MK-1 user and Sender exists		
	Bit0 = 1 Sender specification required (if set to 1, Bit6 is set to “0”)		
011	Delivery Svr Capability (Ext)	[0 to 255 / **0** / 1 /step]	
	Changes the capability of the registered that the I/O device registered.		
	Bit7 = 1 Address book usage limitation (Limitation for each authorized user) Bit6 = 1 RDH authorization link Bit5 to 0: Not used		
013	Server Scheme (Primary) **DFU**		
	This is used for the scan router program.		
014	Server Port Number (Primary) **DFU**		
	This is used for the scan router program.		
015	Server URL Path (Primary) **DFU**		
	This is used for the scan router program.		

System Maintenance

WWW.SERVICE-MANUAL.NET

016	Server Scheme (Secondary) **DFU**
	This is used for the scan router program.
017	Server Port Number (Secondary) **DFU**
	This is used for the scan router program.
018	Server URL Path (Secondary) **DFU**
	This is used for the scan router program.
022	Rapid Sending Control
	Enables or disables the prevention function for the continuous data sending error. [0 to 1 / **0** / -] 0: Disable, 1: Enable

5846	[UCS Settings]	*CTL	-
001	Machine ID (For Delivery Server)		Displays ID
	Displays the unique device ID in use by the delivery server directory. The value is only displayed and cannot be changed. This ID is created from the NIC MAC or IEEE 1394 EUI. The ID is displayed as either 6-byle or 8-byte binary.		
002	Machine ID Clear (For Delivery Server)		Clears ID
	Clears the unique ID of the device used as the name in the file transfer directory. Execute this SP if the connection of the device to the delivery server is unstable. After clearing the ID, the ID will be established again automatically by cycling the machine off and on.		

WWW.SERVICE-MANUAL.NET

003	Maximum Entries	[2000 to 20000/ **2000** /1 /step]
	Changes the maximum number of entries that UCS can handle. If a value smaller than the present value is set, the UCS managed data is cleared, and the data (excluding user code information) is displayed.	
006	Delivery Server Retry Timer	[0 to 255 / **0** / 1 /step]
	Sets the interval for retry attempts when the delivery server fails to acquire the delivery server address book.	
007	Delivery Server Retry Times	[0 to 255 / **0** / 1 /step]
	Sets the number of retry attempts when the delivery server fails to acquire the delivery server address book.	
008	Delivery Server Maximum Entries	[2000 to 50000 / **2000** / 1/step]
	Sets the maximum number account entries of the delivery server user information managed by UCS.	
010	LDAP Search Timeout	[1 to 255 / **60** / 1 /step]
	Sets the length of the timeout for the search of the LDAP server.	
020	WSD Maximum Entries	[5 to 250 / **250** / 1 /step]
	Sets the maximum entries for the address book of the WSD (WS-scanner).	
040	Addr Book Migration (USB => HDD)	
	Not used in this machine.	
041	Fill Addr Acl Info.	
	This SP must be executed immediately after installation of an HDD unit in a basic machine that previously had no HDD. The first time the machine is powered on with the new HDD installed, the system automatically takes the address book from the NVRAM and writes it onto the new HDD. However, the new address book on the HDD can be accessed only by the system administrator at this stage. Executing this SP by the service technician immediately after power on grants full address book access to all users. Procedure 1. Turn the machine off.	

WWW.SERVICE-MANUAL.NET

	2. Install the new HDD. 3. Turn the machine on. 4. The address book and its initial data are created on the HDD automatically. 5. However, at this point the address book can be accessed by only the system administrator or key operator. 6. Enter the SP mode and do SP5846-041. After this SP executes successfully, any user can access the address book.	
043	Addr Book Media	Displays the slot number where an address book data is in. [0 to 30 / **-** /1] 0: Unconfirmed 1: SD Slot 1 2: SD Slot 2 4: USB Flash ROM 20: HDD 30: Nothing
047	Initialize Local Addr Book	Clears the local address book information, including the user code.
048	Initialize Delivery Addr Book	Clears the distribution address book information, except the user code.
049	Initialize LDAP Addr Book	Clears the LDAP address book information, except the user code.
050	Initialize All Addr Book	Clears all directory information managed by UCS, including all user codes.
051	Backup All Addr Book	Uploads all directory information to the SD card.
052	Restore All Addr Book	Downloads all directory information from the SD card.

WWW.SERVICE-MANUAL.NET

053	Clear Backup Info	Deletes the address book data from the SD card in the service slot. Deletes only the files that were uploaded from this machine. This feature does not work if the card is write-protected. Note ▪ After you do this SP, go out of the SP mode, and then turn the power off. ▪ Do not remove the SD card until the Power LED stops flashing.
060	Search option	
	This SP uses bit switches to set up the fuzzy search options for the UCS local address book. Bit: Meaning 0: Checks both upper/lower case characters 1: Japan Only 2: Japan Only 3: Japan Only 4 to 7: Not Used	
062	Complexity option 1	
	Use this SP to set the conditions for password entry to access the local address book. Specifically, this SP limits the password entry to **upper case** and sets the length of the password. [0 to 32 / **0** / 1 /step] Note ▪ This SP does not normally require adjustment. ▪ This SP is enabled only after the system administrator has set up a group password policy to control access to the address book.	
063	Complexity Option 2 **DFU**	
064	Complexity Option 3 **DFU**	
065	Complexity Option 4 **DFU**	

System Maintenance

WWW.SERVICE-MANUAL.NET

091	FTP Auth Port Setting	Specifies the FTP port for getting a distribution server address book that is used in the identification mode. [0 to 65535 / **3671** / 1 /step]
094	Encryption Stat	Shows the status of the encryption function for the address book data.

5847	[Rep Resolution Reduction]	*CTL	-
	SP5847-1 through SP5847-8 changes the default settings of image data transferred externally by the Net File page reference function. [0 to 5 / **2** / 1 /step] SP5847-21 sets the default for JPEG image quality of image files handled by NetFile. “Net files” are jobs to be printed from the document server using a PC and the DeskTopBinder software.		
001	Rate for Copy Color		0: 1x 1: 1/2x **2: 1/3x** 3: 1/4x 4: 1/6x 5: 1/8x
002	Rate for Copy B&W Text		
003	Rate for Copy B&W Other		
004	Rate for Printer Color		
005	Rate for Printer B&W		
006	Rate for Printer Color 1200dpi		0: 1x 1: 1/2x 2: 1/3x 3: 1/4x **4: 1/6x** 5: 1/8x

WWW.SERVICE-MANUAL.NET

007	Rate for Printer B&W 1200dpi	0: 1x **1: 1/2x** 2: 1/3x 3: 1/4x 4: 1/6x 5: 1/8x
021	Network Quality Default for JPEG	
	Sets the default value for the quality of JPEG images sent as NetFile pages. This function is available only with the MLB (Media Link Board) option installed. [5 to 95 / **50** / 1 /step]	

5848	[Web Service]	*CTL	-
	5848 2 sets the 4-bit switch assignment for the access control setting. Setting of 0001 has no effect on access and delivery from Scan Router. 5848 100 sets the maximum size allowed for downloaded images. The default is equal to 1 gigabyte.		
002	Access Ctrl: Repository (only Lower 4 bits)	0000: No access control 0001: Denies access to DeskTop Binder. **0010**: No writing control	
003	Access Control: Doc. Svr. Print (Lower 4 bits)	Switches access control on and off. **0000**: No access control 0001: Denies access to DeskTop Binder.	
004	Access Control: User Directory (Lower 4 bits)		
007	Access Ctrl: Comm. Log Fax (Lower 4 bits)		
009	Access Ctrl: Job Ctrl (Lower 4 bits)		
011	Access Ctrl: Device management		
021	Access Ctrl: Delivery (Lower		

System Maintenance

WWW.SERVICE-MANUAL.NET

	4 bits)	
022	Access Ctrl: uAdministration (Lower 4bits)	
99	Repository: Download Image Setting	**DFU**
100	Repository: Download Image Max. Size	Specifies the max size of the image data that the machine can download. [1 to 1024 / **1024** / 1 MB /step]
210	Setting: LogType: Job1	NIA
211	Setting: LogType: Job2	
212	Setting: LogType: Access	
213	Setting: Primary Srv	
214	Setting: Secondary Srv	
215	Setting: Start Time	
216	Setting: Interval Time	
217	Setting: Timing	

5849	[Installation Date]	*CTL	-
5849 1	Display	The “Counter Clear Day” has been changed to “Installation Date” or “Inst. Date”.	
5849 2	Switch to Print	Determines whether the installation date is printed on the printout for the total counter. [0 or 1 / **1** / -] 0: OFF (No Print) 1: ON (Print)	
003	Total Counter	-	

WWW.SERVICE-MANUAL.NET

5850	[Address Book Function]	*CTL	-
003	Replacement of Circuit Classification **Japan Only**		
	The machine is sold ready to use with a G3 line. This SP allows you to switch all at once to convert to G4 after you add a G4 line. Conversely, if for some reason the G4 line becomes unusable, you can easily switch back to G3.		

5851	[Bluetooth]
	Sets the operation mode for the Bluetooth Unit. Press either key. **[0:Public]** [1: Private]

5853	[Stamp Data Download]
	Use this SP to download the fixed stamp data stored in the firmware of the ROM and copy it to the HDD. This SP can be executed as many times as required. This SP must be executed after replacing or formatting the hard disks. Note ▪ This SP can be executed only with the hard disks installed.

5856	[Remote ROM Update]		
	Allows the technician to upgrade the firmware using a local port (IEEE1284) when updating the remote ROM.		
002	Local Port	*CTL	[0 to 1 / **0** / 1/step] 0: Disable 1: Enable

System Maintenance

WWW.SERVICE-MANUAL.NET

5857	[Save Debug Log]	*CTL	-
001	On/Off (1:ON 0:OFF)	**0**: OFF, 1: ON	
	Switches the debug log feature on and off. The debug log cannot be captured until this feature is switched on.		
002	Target (2: HDD 3: SD)	**2**: HDD, 3: SD Card	
	Selects the storage device to save debug logs information when the conditions set with SP5-858 are satisfied. [2 to 3 / **2** / 1 /step]		
005	Save to HDD		
	Saves the debug log of the input SC number in memory to the HDD. A unique file name is generated to avoid overwriting existing file names on the SD Card. Up to 4MB can be copied to an SD Card. 4 MB segments can be copied one by one to each SD Card.		
006	Save to SD Card		
	Saves the debug log of the input SC number in memory to the SD card.		
009	Copy HDD to SD Card (Latest 4 MB)		
010	Copy HDD to SD Card (Latest 4 MB Any Key)		
011	Erase HDD Debug Data		
012	Erase SD Card Debug Data		
013	Free Space on SD Card		
014	Copy SD to SD (Latest 4 MB)		
015	Copy SD to SD (Latest 4 MB Any Key)		
016	Make HDD Debug		
017	Make SD Debug		

WWW.SERVICE-MANUAL.NET

5858	[Debug Save When]	*CTL	-
	These SPs select the content of the debugging information to be saved to the destination selected by SP5857-002. SP5858-3 stores one SC specified by number. Refer to Section 4 for a list of SC error codes.		
001	Engine SC Error (0: OFF, 1: ON)	Turns on/off the debug save for SC codes generated by copier engine errors. [0 or 1 / **0** / 1/ step]	
002	Controller SC Error (0: OFF, 1: ON)	Turns on/off the debug save for SC codes generated by GW controller errors. [0 or 1 / **0** / 1/ step]	
003	Any SC Error	[0 to 65535 / **0** / 1 /step]	
004	Jam (0: OFF, 1: ON)	Turns on/off the debug save for jam errors.	

5859	[Debug Save Key No.]	*CTL	**-**
001	Key 1	These SPs allow you to set up to 10 keys for log files for functions that use common memory on the controller board. [–9999999 to 9999999 / **0** / –]	
002	Key 2		
003	Key 3		
004	Key 4		
005	Key 5		
006	Key 6		
007	Key 7		
008	Key 8		
009	Key 9		
010	Key 10		

System Maintenance

WWW.SERVICE-MANUAL.NET

5860	[SMTP/POP3/IMAP4]	*CTL	-
020	Partial Mail Receive Timeout	[1 to 168 / **72** / 1 hour/step]	
	Sets the amount of time to wait before saving a mail that breaks up during reception. The received mail is discarded if the remaining portion of the mail is not received during this prescribed time.		
021	MDN Response RFC2.5298 Compliance	[0 to 1 / **1** / –]	
	Determines whether RFC2.5298 compliance is switched on for MDN reply mail. 0: No **1**: Yes		
022	SMTP Auth. From Field Replacement	[0 to 1 / **0** / –]	
	Determines whether the FROM item of the mail header is switched to the validated account after the SMTP server is validated. **0**: No. “From” item not switched. 1: Yes. “From item switched.		
025	SMTP Auth. Direct Setting	[0 or 1 / **0** / –]	
	Selects the authentication method for SMPT. **Bit switch:** ▪ Bit 0: LOGIN ▪ Bit 1: PLAIN ▪ Bit 2: CRAM MD5 ▪ Bit 3: DIGEST MD5 ▪ Bit 4 to 7: Not used Note ▪ This SP is activated only when SMTP authorization is enabled by UP mode.		

WWW.SERVICE-MANUAL.NET

026	S/MIME: MIME Header Setting	-	Selects the MIME header type of an E-mail sent by S/MIME. [0 to 2 / **0** / 1] 0: Microsoft Outlook Express standard 1: Internet Draft standard 2: RFC standard

5870	[Common Key Info Writing]		
001	Writing	*CTL	Writes to flash ROM the common proof for validating the device for @Remote specifications.
003	Initialize	*CTL	Initializes the data area of the common proof for validating.

5873	[SD Card Appli Move]	
001	Move Exec	This SP copies the application programs from the original SD card in SD card slot 2 to an SD card in SD card slot 1.
002	Undo Exec	This SP copies back the application programs from an SD card in SD Card Slot 2 to the original SD card in SD card slot 1. Use this menu when you have mistakenly copied some programs by using "Move Exec" (SP5873-1).

5875	[SC Auto Reboot]		
001	Reboot Setting	*CTL	Enables or disables the automatic reboot function when an SC error occurs. [0 or 1/ **0** / –] 0: The machine reboots automatically when the machine issues an SC error and logs the SC error code. If the same SC occurs again, the machine does not reboot. 1: The machine does not reboot when an SC error occurs.

WWW.SERVICE-MANUAL.NET

			The reboot is not executed for Type A or C SC codes.
002	Reboot Type	*CTL	Selects the reboot method for SC. [0 or 1 / **0** / -] 0: Manual reboot, 1: Automatic reboot

5878	[Option Setup]		
001	Data Overwrite Security	-	Enables the Data Overwrite Security unit. Press "EXECUTE" on the operation panel. Then turn the machine off and on.
002	HDD Encryption	-	Installs the HDD Encryption unit.

5881	[Fixed Phrase Block Erasing]		
001	-	-	Deletes the fixed phrase.

5883	[Line Speed Selection]		
	Selects the line speed for middle thick paper.		
001	Middle Thick	*ENG	[0 or 1 / **1** / 1 /step] 0: MID CARD: Half Speed (115 mm/sec) 1: MID CARD: Normal Speed (C2.5c: 154, C2.5d: 205 mm/sec)

WWW.SERVICE-MANUAL.NET

5885	[Set WIM Function] Web Image Monitor Settings		
	Close or disclose the functions of web image monitor.		
020	Document Server ACC Ctrl	*CTL	0: OFF, 1: ON Bit Meaning 0: Forbid all document server access (1) 1: Forbid user mode access (1) 2: Forbid print function (1) 3: Forbid fax TX (1) 4: Forbid scan sending (1) 5: Forbid downloading (1) 6: Forbid delete (1) 7: Reserved
050	Document Server List Def. Lines	*CTL	Selects the display type for the document box list. [0 to 2 / **0** / 1] 0: Thumbnail, 1: Icon, 2: Details
051	DocSvr Trans	*CTL	Sets the number of documents to be displayed in the document box list. [5 to 20 / **10** / 1]
100	Signature Setting	*CTL	Selects whether the signature is added to the scanned documents with the WIM when they are transmitted by an e-mail. [0 to 2 / **0** / 1/step] 0: Setting for each e-mail 1: Signature for all 2: No signature

WWW.SERVICE-MANUAL.NET

101	Encryption Setting	*CTL	Determines whether the scanned documents with the WIM are encrypted when they are transmitted by an e-mail. [0 to 1 / **0** / 1] 0: Not encrypted, 1:Encryption
200	Memory Leak Detect Stting	*CTL	Not Used
201	DocSrv Session Time Out Setting	*CTL	Not Used

5887	[SD Get Counter]		
	This SP determines whether the ROM can be updated.		
001	-	*CTL	This SP sends a text file to an SD card inserted in SD card Slot 2 (lower slot). The operation stores. The file is stored in a folder created in the root directory of the SD card called SD_COUNTER. The file is saved as a text file (*.txt) prefixed with the number of the machine. 1. Insert the SD card in SD card Slot 2 (lower slot). 2. Select SP5887 then touch [EXECUTE]. Touch [Execute] in the message when you are prompted.

WWW.SERVICE-MANUAL.NET

5888	[Personal Information Protect]		
001	-	*CTL	Selects the protection level for logs. [0 to 1 / **0** / 1} 0: No authentication, No protection for logs 1: No authentication, Protected logs (only an administrator can see the logs)

5893	[SDK Application Counter]	*CTL	-
	Displays the counter name of each SDK application.		
001	SDK-1		
002	SDK-2		
003	SDK-3		
004	SDK-4		
005	SDK-5		
006	SDK-6		

5894	[Test Name1]		
	Test Name1_1		
001	Switch Charge Mode	*ENG	[0 to 2 / **0** / 1/step]

System Maintenance

WWW.SERVICE-MANUAL.NET

5895	[Application Invalidation]		
	Enables or disables the printer or scanner application. These SPs are used only when an external controller is installed in the machine.		
001	Printer	*CTL	[0 or 1 / **0** / -] 0: Enable 1: Disable
002	Scanner	*CTL	

5907	[Plug & Play Maker/Model Name]
	Selects the brand name and the production name for Windows Plug & Play. This information is stored in the NVRAM. If the NVRAM is defective, these names should be registered again. After selecting, press the "Original Type" key and "#" key at the same time. When the setting is completed, the beeper sounds five times.

5913	[Switchover Permission Time]		
002	Print Application Timer	*CTL	[3 to 30 / **3** / 1 second /step]
	Sets the amount of time to elapse while the machine is in standby mode (and the operation panel keys have not been used) before another application can gain control of the display.		

5967	[Copy Server Set Function]	*CTL	**0**: ON, 1: OFF
	Enables and disables the document server. This is a security measure that prevents image data from being left in the temporary area of the HDD. After changing this setting, you must switch the main switch off and on to enable the new setting.		

WWW.SERVICE-MANUAL.NET

5974	[Cherry Server]		
	Specifies which version of ScanRouter, “Lite” or “Full”, is installed.		
001	Cherry Server	*CTL	[0 or 1 / **0** / –] 0: Lite, 1: Full

5985	[Device Setting]	
	The NIC and USB support features are built into the GW controller. Use this SP to enable and disable these features. In order to use the NIC and USB functions built into the controller board, these SP codes must be set to "1".	
001	On Board NIC	[0 to 2 / **0** / 1 /step] 0: Disable, 1: Enable, 2: Function limitation When the "Function limitation" is set, "On board NIC" is limited only for the NRS or LDAP/NT authentication. Note ▪ Other network applications than NRS or LDAP/NT authentication are not available when this SP is set to "2". Even though you can change the initial settings of those network applications, the settings do not work.
002	On Board USB	[0 or 1 / **0** / 1/step] 0: Disable, 1: Enable

5987	[Mech. Counter]	
001	0: OFF / 1: ON	This SP detects that a mechanical counter device is removed. If it is detected, SC610 occurs.

System Maintenance

WWW.SERVICE-MANUAL.NET

5990	[SP print mode]		
	Prints out the SMC sheets.		
001	All (Data List)	-	-
002	SP (Mode Data List)	-	
003	User Program	-	
004	Logging Data	-	
005	Diagnostic Report	-	
006	Non-Default	-	
007	NIB Summary	-	
008	Capture Log	-	
021	Copier User Program	-	
022	Scanner SP	-	
023	Scanner User Program	-	
024	SDK/J Summary	-	-
025	SDK/J Application Info	-	

5998	[Fusing Cont mode] Fusing Control Mode		
	Turns the silent fusing warm-up mode on or off.		
001	fast/silent	*ENG	[0 or 1 / **1** / -] 0: Silent (less noise) 1: Fast (less time)

WWW.SERVICE-MANUAL.NET

5.7 MAIN SP TABLES-6

5.7.1 SP6-XXX (PERIPHERALS)

6006	[ADF Adj.] ADF Adjustment		
	Adjusts the side-to-side and leading registration of originals with the ARDF.		
001	Side-to-Side Registration	*ENG	[-3.0 to 3.0 / **0** / 0.1 mm/step]
002	Side-to-Side Registration		
003	Leading Edge Registration	*ENG	[-5.0 to 5.0 / **0** / 0.1 mm/step]
	Adjusts the amount of paper buckle to correct original skew for the front and rear sides.		
005	Buckle: Duplex Front	*ENG	[-3.0 to 3.0 / **0** / 0.1 mm/step]
006	Buckle: Duplex Rear		[-2.5 to 2.5 / **0** / 0.1 mm/step]
	Adjusts the erase margin at the original trailing edge.		
007	Rear Edge Erase	*ENG	[-10 to 10 / **0** / 0.1 mm/step]

6007	[ADF INPUT Check]
	Displays the signals received from the sensors and switches of the ARDF. Only Bit 0 is used for ADF input check (☛ p.5-308 "Main SP Tables-9" in this section).

6008	[ADF OUTPUT Check]
	Activates the electrical components for functional check. It is not possible to activate more than one component at the same time (☛p.5-308 "Main SP Tables-9" in this section).

System Maintenance

WWW.SERVICE-MANUAL.NET

6009	[ADF Free Run]		
	Performs a DF free run in simplex, duplex mode or stamp mode.		
001	Free Run Simplex Motion	-	-
002	Free Run Duplex Motion	-	
003	Free Run Stamp Motion	-	

6010	[Stamp Position Adj.] Fax Stamp Position Adjustment		
	Adjusts the horizontal position of the stamp on the scanned originals.		
6010 1	Stamp Position Adj.	*ENG	[-5.0 to 5.0 / **0** / 1 mm/step]

6016	[Original Size Detection Priority] Original Size Detection Priority			
	Specifies the original size for a size detected by the original sensor, since original sensors cannot recognize all sizes.			
001	Original Size Detection Priority	*ENG	[0 or 1 / **0** / -] 0: Setting 1, 1: Setting 2	
		NA	Setting 1	Setting 2
			DLT SEF	Folio SEF 11" x 15"
			LG SEF	Foolscap SEF
			LT SEF	US EXE 8" x 10"
			LT LEF	US EXE LEF
		EU/ ASIA	DLT SEF	8K 267 x 390 mm
			LT SEF	16K 195 x 267 mm
			LT LEF	16K 267 x 195 mm

WWW.SERVICE-MANUAL.NET

6017	[DF Magnification Adj.] DF Magnification Adjustment		
	Adjusts the magnification in the sub-scan direction for the ARDF.		
001	DF Magnification Adj.	*CTL	[-5.0 to 5.0 / **0** / 0.1 %/step]

6020	[Skew Correction Moving Setting]		
	Turns the original skew correction in the ARDF for all original sizes on or off.		
001	-	*ENG	[0 or 1 / **0** / -] 0: Off (only for small original sizes) 1: On (for all original sizes)

6128	[Punch Position: Sub Scan]		
	Adjusts the punching position in the sub scan direction.		
001	1.Domestic 2Hole (Europe 2Hole)	*ENG	[-7.5 to 7.5 / **0** / 0.5 mm/step]
002	2.North America 3Hole	*ENG	
003	3.Europe 4Hole	*ENG	
004	4.North Europe 4Hole	*ENG	
005	5.North Europe 2Hole	*ENG	

6129	[Punch Position: Main Scan]		
	Adjusts the punching position in the main scan direction.		
001	1.Domestic 2Hole (Europe 2Hole)	*ENG	[-2.0 to 2.0 / **0** / 0.4 mm/step]
002	2.North America 3Hole	*ENG	
003	3.Europe 4Hole	*ENG	
004	4.North Europe 4Hole	*ENG	
005	5.North Europe 2Hole	*ENG	

WWW.SERVICE-MANUAL.NET

6130	[Skew Correction: Buckle Adj.]		
	Adjusts the paper buckle for each paper size.		
001	A3T	*ENG	[-5.0 to 5.0 / **0** / 0.25 mm/step]
002	B4T	*ENG	
003	A4T	*ENG	
004	A4Y	*ENG	
005	B5T	*ENG	
006	B5Y	*ENG	
007	DLT-T	*ENG	
008	LG-T	*ENG	
009	LT-T	*ENG	
010	LT-Y	*ENG	
011	12" x 18"	*ENG	
012	Other	*ENG	

6131	[Skew Correction Control]		
	Selects the skew correction control for each paper size. These are only activated for B804/B805.		
001	A3T	*ENG	[0 or 1 / **1** / 1/step] 0: No (No skew correction) 1: Roller Stop Skew Correction
002	B4T	*ENG	
003	A4T	*ENG	
004	A4Y	*ENG	

WWW.SERVICE-MANUAL.NET

005	B5T	*ENG	
006	B5Y	*ENG	
007	DLT-T	*ENG	
008	LG-T	*ENG	
009	LT-T	*ENG	
010	LT-Y	*ENG	
011	12" x 18"	*ENG	
012	Other	*ENG	

6132	[Jogger Fence Fine Adj]		
	This SP adjusts the distance between the jogger fences and the sides of the stack on the finisher stapling tray in the (Booklet) Finisher B804/B805. The adjustment is done perpendicular to the direction of paper feed.		
001	A3T	*ENG	[-1.5 to 1.5 / **0** / 0.5 mm/step] + Value: Increases distance between jogger fences and the sides of the stack. - Value: Decreases the distance between the jogger fences and the sides of the stack.
002	B4T	*ENG	
003	A4T	*ENG	
004	A4Y	*ENG	
005	B5T	*ENG	
006	B5Y	*ENG	
007	DLT-T	*ENG	
008	LG-T	*ENG	
009	LT-T	*ENG	
010	LT-Y	*ENG	

System Maintenance

WWW.SERVICE-MANUAL.NET

011	12" x 18"	*ENG	
012	Other	*ENG	

6133	[Staple Position Adjustment]		
	Adjusts the staple position for each finisher (B408/B804/B805). + Value: Moves the staple position to the rear side. - Value: Moves the staple position to the front side.		
001	Finisher (B408/B804/B805)	*ENG	[-3.5 to 3.5 / **0** / 1/step]

6134	[Saddle Stitch Position Adjustment]	
	Use this SP to adjust the stapling position of the booklet stapler when paper is stapled and folded in the Booklet Finisher B804.	
001	A3T	[-3.0 to 3.0 / **0** / 0.2 mm/step] + Value: Shifts staple position toward the crease. - Value: Shifts staple position away from the crease. 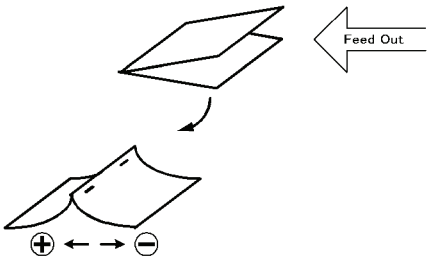
002	B4T	
003	A4T	
004	B5T	
005	DLT-T	
006	LG-T	
007	LT-T	
008	12" x 18"	
009	Other	

WWW.SERVICE-MANUAL.NET

6135	[Folder Position Adj.]	
	This SP corrects the folding position when paper is stapled and folded in the Booklet Finisher B804.	
001	A3T	[-3.0 to 3.0 / **0** / 0.2 mm/step] + Value: Shifts staple position toward the crease. - Value: Shifts staple position away from the crease. 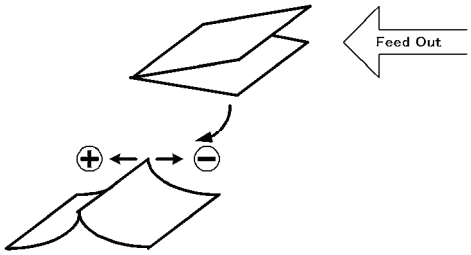
002	B4T	
003	A4T	
004	B5T	
005	DLT-T	
006	LG-T	
007	LT-T	
008	12" x 18"	
009	Other	

6136	[Folding Number]	
	Sets the number of times that folding is done in the Booklet Finisher B804.	
001	-	[2 to 30 / **2** / 1 time/step]

6139	[FIN (KIN) INPUT Check] Finisher (B408) Input Check
	Displays the signals received from sensors and switches of the booklet finisher. (☛ p.5-308 "Main SP Tables-9" in this section)

6140	[FIN (EUP) INPUT Check] Finisher (B804/B805) Input Check
	Displays the signals received from sensors and switches of the (booklet) finisher. (☛ p.5-308 "Main SP Tables-9" in this section)

System Maintenance

WWW.SERVICE-MANUAL.NET

6144	[FIN (KIN) OUPUT Check] Finisher (B408) Output Check
	Displays the signals received from sensors and switches of the booklet finisher. (☛ p.5-308 "Main SP Tables-9" in this section)

6145	[FIN (EUP) OUPUT Check] Finisher (B804/B805) Output Check
	Displays the signals received from sensors and switches of the (booklet) finisher. (☛ p.5-308 "Main SP Tables-9" in this section)

6149	[Max. Pre-Stack Sheet]	*ENG	Number of Pre-Stack Sheets
	This SP sets the number of sheets sent to the pre-stack tray. **Note**: You may need to adjust this setting or switch it off when feeding thick or slick paper.		
001	-	[0 to 3 / **3** / 1 sheet/step]	

6150	[INPUT Check]
	Displays the signals received from sensors and switches of the bridge unit (D386) / side tray (D542) (☛ p.5-308 "Main SP Tables-9" in this section).

6151	[OUTPUT Check]
	Displays the signals received from sensors and switches of the bridge unit (D386)/ side tray (D542) (☛ p.5-308 "Main SP Tables-9" in this section).

6152	[INPUT Check]
	Displays the signals received from sensors and switches of the shift tray (D388) (☛ p.5-308 "Main SP Tables-9" in this section).

WWW.SERVICE-MANUAL.NET

6153	[OUTPUT Check]
	Displays the signals received from sensors and switches of the shift tray (D388) (☛ p.5-308 "Main SP Tables-9" in this section).

6154	[INPUT Check]
	Displays the signals received from sensors and switches of the 1 bin tray (D536) (☛ p.5-308 "Main SP Tables-9" in this section).

6155	[OUTPUT Check]
	Displays the signals received from sensors and switches of the 1 bin tray (D536) (☛ p.5-308 "Main SP Tables-9" in this section)
001	1 bin: Junction Solenoid

6160	[INPUT Check]
	Displays the signals received from sensors and switches of the two-tray paper feed unit (D537), LCT 2000 (D538) and LCT 1200 (D539) (☛ p.5-308 "Main SP Tables-9" in this section)

6161	[OUTPUT Check]
	Displays the signals received from sensors and switches of the two-tray paper feed unit (D537), LCT 2000 (D538) and LCT 1200 (D539) (☛ p.5-308 "Main SP Tables-9" in this section)

WWW.SERVICE-MANUAL.NET

5.8 MAIN SP TABLES-7

5.8.1 SP7-XXX (DATA LOG)

7401	[Total SC Counter]		
	Displays the number of SC codes detected.		
001	SC Counter	*CTL	[0 to 9999 / **0** / 1/step]

7403	[SC History]		
	Logs the SC codes detected. The 10 most recently detected SC Codes are not displayed on the screen, but can be seen on the SMC (logging) outputs.		
001	Latest	*CTL	-
002	Latest 1		
003	Latest 2		
004	Latest 3		
005	Latest 4		
006	Latest 5		
007	Latest 6		
008	Latest 7		
009	Latest 8		
010	Latest 9		

7502	[Total Paper Jam Counter]		
	Displays the total number of jams detected.		
001	Total Jam	* CTL	[0 to 9999 / **0** / 1 sheet/step]

WWW.SERVICE-MANUAL.NET

7503	[Total Original Jam Counter]		
	Displays the total number of original jams.		
001	Original Jam counter	*CTL	[0 to 9999 / **0** / 1 original/step]

7504	[Paper Jam Location] ON: On check, OFF: Off Check		
	Displays the number of jams according to the location where jams were detected. **NOTE:** The LCT is counted as the 3rd feed station.		
001	At Power On	*CTL	For details, (☛ p.6-97 "Jam Detection")
003	Tray 1: ON	*CTL	
004	Tray 2: ON	*CTL	
005	Tray 3: ON	*CTL	
006	Tray 4: ON	*CTL	
007	LCT : ON	*CTL	
008	Bypass: ON	*CTL	
009	Duplex: ON	*CTL	
011	Vertical Transport 1: ON	*CTL	
012	Vertical Transport 2: ON	*CTL	
013	Bank: Transport Sn1	*CTL	For details, (☛ p.6-97 "Jam Detection")
014	Bank: Transport Sn2	*CTL	
017	Registration: ON	*CTL	
018	Fusing Entrance: ON	*CTL	
019	Fusing Exit: ON	*CTL	
020	Paper Exit: ON	*CTL	
021	Bridge Exit: ON	*CTL	

WWW.SERVICE-MANUAL.NET

022	Bridge Transport: ON	*CTL	
024	Junction Gate Sensor : On	*CTL	
025	Duplex Exit: ON	*CTL	For details, (☛ p.6-97 "Jam Detection")
026	Duplex Entrance: ON (Out)	*CTL	
027	Duplex Entrance: ON (Out)	*CTL	
051	Vertical Transport 1: Off	*CTL	
052	Vertical Transport 2: Off	*CTL	
053	Bank Transport 1: Off	*CTL	
054	Bank Transport 2: Off	*CTL	
057	Registration Sensor: Off	*CTL	
058	LCT Feed Sensor : Off		
060	Paper Exit Off	*CTL	
061	Bridge Exit: Off	*CTL	
062	Bridge Transport: Off	*CTL	
064	Junction Gate Sensor : Off	*CTL	For details, (☛ p.6-97 "Jam Detection")
065	Duplex Exit: Off	*CTL	
066	Duplex Entrance: Off (In)	*CTL	
067	Duplex entrance : Off (Out)	*CTL	
100	Finisher Entrance: KIN	*CTL	
101	Finisher Shift Tray Exit: KIN	*CTL	
102	Finisher Staple: KIN	*CTL	
103	Finisher Exit: KIN	*CTL	
105	Finisher Tray Lift Motor: KIN	*CTL	

WWW.SERVICE-MANUAL.NET

106	Finisher Jogger Motor: KIN	*CTL	
107	Finisher Shift Motor: KIN	*CTL	
108	Finisher Staple Motor: KIN	*CTL	
109	Finisher Exit Motor: KIN	*CTL	
191	Finisher Entrance: EUP	*CTL	For details, (☛ p.6-97 "Jam Detection")
192	Finisher Proof Exit: EUP	*CTL	
193	Finisher Shift Tray Exit: EUP	*CTL	
194	Finisher Stapler Exit: EUP	*CTL	
195	Finisher Exit: EUP	*CTL	
198	Finisher Folder: EUP	*CTL	
199	Finisher Tray Motor: EUP	*CTL	
200	Finisher Jogger Motor: EUP	*CTL	
201	Finisher Shift Motor: EUP	*CTL	
202	Finisher Staple Moving Motor: EUP	*CTL	
203	Finisher Staple Motor: EUP	*CTL	
204	Finisher Folder Motor: EUP	*CTL	
206	Finisher Punch Motor: EUP	*CTL	

WWW.SERVICE-MANUAL.NET

7505	[Original Jam Detection]		
	Displays the total number of original jams by location.		
001	At Power On	*CTL	-
003	Skew Correction Sensor: On	*CTL	-
004	Registration Sensor: On	*CTL	
005	Original Sensor: On	*CTL	
006	Registration Sensor: On	*CTL	
007	Original Exit Sensor: On	*CTL	
008	Reverse Sensor: On	*CTL	
053	Skew Correction Sensor: Off	*CTL	-
054	Registration Sensor: Off	*CTL	
055	Original Sensor: Off	*CTL	
056	Registration Sensor: Off	*CTL	
057	Original Exit Sensor: Off	*CTL	
058	Reverse Sensor: Off	*CTL	

WWW.SERVICE-MANUAL.NET

7506	[Jam Count by Paper Size]		
	Displays the number of jams according to the paper size.		
005	A4 LEF	*CTL	[0 to 9999 / **0** / 1 sheet/step]
006	A5 LEF	*CTL	
014	B5 LEF	*CTL	
038	LT LEF	*CTL	
044	HLT LEF	*CTL	
132	A3 SEF	*CTL	[0 to 9999 / **0** / 1 sheet/step]
133	A4 SEF	*CTL	
134	A5 SEF	*CTL	
141	B4 SEF	*CTL	
142	B5 SEF	*CTL	
160	DLT SEF	*CTL	
164	LG SEF	*CTL	
166	LT SEF	*CTL	
172	HLT SEF	*CTL	
255	Others	*CTL	[0 to 9999 / **0** / 1 sheet/step]

WWW.SERVICE-MANUAL.NET

7507	[Plotter Jam History]		
	Displays the 10 most recently detected paper jams.		
001	Latest	*CTL	-
002	Latest 1		
003	Latest 2		
004	Latest 3		
005	Latest 4		
006	Latest 5		
007	Latest 6		
008	Latest 7		
009	Latest 8		
010	Latest 9		

7508	[Original Jam History]		
	Displays the 10 most recently detected original jams.		
001	Latest	*CTL	-
002	Latest-1		
003	Latest-2		
004	Latest-3		
005	Latest-4		
006	Latest-5		
007	Latest-6		
008	Latest-7		

WWW.SERVICE-MANUAL.NET

009	Latest-8		
010	Latest-9		

7624	Part Replacement Operation ON/OFF	
	Selects the PM maintenance for each part.	
001	K Drum Unit	[0 or 1 / **1** -] 0: Not PM maintenance 1: PM maintenance
002	M Drum Unit	
003	C Drum Unit	
004	Y Drum Unit	
005	K Dev Unit	
006	M Dev Unit	
007	C Dev Unit	
008	Y Dev Unit	
009	K Developer	
010	M Developer	
011	C Developer	
012	Y Developer	
013	ITB Unit	[0 or 1 / **1** -] 0: Not PM maintenance 1: PM maintenance
014	Belt Cleaning Unit	
015	Fusing Unit	
016	PTR Unit	
017	Waste Toner Bottle	
018	Fusing Roller	
019	Pressure Roller	

WWW.SERVICE-MANUAL.NET

7801	[ROM No/ Firmware Version]		
255	Engine	*CTL	Displays all versions and ROM numbers in the machine.

7803	[PM Counter Display] (Page, Unit, [Color])		
	Displays the number of sheets printed for each current maintenance unit. PM counters click up based on the number of A4 (LT) LEF size sheets printed. Therefore, the A3 (DLT) Double Count is activated. The Double Count cannot be deactivated. When a unit is replaced, the machine automatically detects that the new unit is installed. Then, the current PM counter value is automatically moved to the PM Counter - Previous (SP7-906-1 to 10) and is reset to “0”. The total number of sheets printed with the last unit replaced can be checked with SP7-906-1 to 10. NOTE: The LCT is counted as the 3rd feed station.		
001	Paper	*CTL	-
002	Page: K Drum Unit	*ENG	-
003	Page: M Drum Unit		
004	Page: C Drum Unit		
005	Page: Y Drum Unit		
006	Page: K Dev Unit		
007	Page: M Dev Unit		
008	Page: C Dev Unit		
009	Page: Y Dev Unit		
010	Page: K Developer	*ENG	-

WWW.SERVICE-MANUAL.NET

011	Page: M Developer		
012	Page: C Developer		
013	Page: Y Developer		
014	Page: ITB Unit		
015	Page: Belt Cleaning Unit		
016	Page: Fusing Unit		
017	Page: PTR Unit		
018	Page: Toner Collection Bottle		
019	Page: Fusing Roller (Heating Roller)		
020	Page: Pressure Roller		
	Displays the number of revolutions of motors or clutches for each current maintenance unit. [0 to 9999999 / **0** / 1 revolution/step] When a unit is replaced, the machine automatically detects that the new unit is installed. Then, the current PM counter value is automatically moved to the PM Counter - Previous (SP7-906-11 to 20) and is reset to “0”. The total number of revolutions made with the last unit replaced can be checked with SP7-906-11 to 20.		
031	Rotation: K Drum Unit	*ENG	[0 to 999999999 / - / 1 mm/step]
032	Rotation: M Drum Unit		
033	Rotation: C Drum Unit		
034	Rotation: Y Drum Unit		
035	Rotation: K Dev Unit		
036	Rotation: M Dev Unit		

System Maintenance

WWW.SERVICE-MANUAL.NET

037	Rotation: C Dev Unit		
038	Rotation: Y Dev Unit		
039	Rotation: K Developer		
040	Rotation: M Developer		
041	Rotation: C Developer		
042	Rotation: Y Developer		
043	Rotation: ITB Unit	*ENG	[0 to 999999999 / - / 1 mm/step]
044	Rotation: Cleaning Unit	*ENG	
045	Rotation: Fusing Unit	*ENG	
046	Rotation: PTR Unit	*ENG	
047	Measurement: Toner Collection bottle	*ENG	
048	Rotation: Fusing Roller (Heating Roller)	*ENG	
049	Rotation: Pressure Roller	*ENG	
	Displays the value given by the following formula: (Current revolution ÷ Target revolution) × 100. This shows how much of the unit's expected lifetime has been used up. The Rotation% counter is based on rotations, not prints. If the number of rotations reaches the limit, the machine enters the end condition for that unit. If the print count lifetime is reached first, the machine also enters the end condition, even though the R% counter is still less than 100%.		
061	Rotation (%): K Drum Unit	*ENG	[0 to 255 / - / 1 %/step]
062	Rotation (%): M Drum Unit		
063	Rotation (%): C Drum Unit		

WWW.SERVICE-MANUAL.NET

064	Rotation (%): Y Drum Unit		
065	Rotation (%): K Dev Unit		
066	Rotation (%): M Dev Unit		
067	Rotation (%): C Dev Unit		
068	Rotation (%): Y Dev Unit		
069	Rotation (%): K Developer		
070	Rotation (%): M Developer		
071	Rotation (%): C Developer		
072	Rotation (%): Y Developer		
073	Rotation (%): ITB Unit	*ENG	[0 to 255 / - / 1 %/step]
074	Rotation (%): Cleaning Unit		
075	Rotation (%): Fusing Unit		
076	Rotation (%): PTR Unit		
077	Measurement (%): Toner Collection bottle		
078	Rotation (%): Fusing Roller (Heating Roller)		
079	Rotation (%): Pressure Roller		
	Displays the value given by the following formula: (Current printouts ÷ Target printouts) × 100. This shows how much of the unit's expected lifetime has been used up. The Page% counter is based on printouts, not revolutions. If the number of printouts reaches the limit, the machine enters the end condition for that unit. If the revolution count lifetime is reached first, the machine also enters the end condition, even though the Page% counter is still less than 100%.		

WWW.SERVICE-MANUAL.NET

091	Page (%): K PCU (Drum Unit)	*ENG	[0 to 255 / - / 1 %/step]
092	Page (%): M PCU (Drum Unit)		
093	Page (%): C PCU (Drum Unit)		
094	Page (%): Y PCU (Drum Unit)		
095	Page (%): K Dev Unit		
096	Page (%): M Dev Unit		
097	Page (%): C Dev Unit		
098	Page (%): Y Dev Unit		
099	Page (%): K Developer	*ENG	[0 to 255 / - / 1 %/step]
100	Page (%): M Developer		
101	Page (%): C Developer		
102	Page (%): Y Developer		
103	Page (%): ITB Unit		
104	Page (%): Cleaning Unit		
105	Page (%): Fusing Unit		
106	Page (%): PTR Unit		
107	Page (%): Fusing Roller (Heating Roller)		
108	Page (%): Pressure Roller		

WWW.SERVICE-MANUAL.NET

7804	[PM Counter Reset] PM Counter Clear (Unit, [Color])		
	Clears the PM counter. Press the Enter key after the machine asks “Execute?”, which will store the PM counter value in SP7-906 (PM Counter - Previous) and reset the value of the current PM counter (SP7-803) to “0”.		
002	PCU (Drum Unit): Bk	-	-
003	PCU (Drum Unit): M	-	-
004	PCU (Drum Unit): C	-	-
005	PCU (Drum Unit): Y	-	-
006	PCU (Drum Unit): All	-	-
007	Development Unit: Bk	-	-
008	Development Unit: M	-	-
009	Development Unit: C	-	-
010	Development Unit: Y	-	-
011	Development Unit: All	-	-
012	Developer: Bk	-	-
013	Developer: M	-	-
014	Developer: C	-	-
015	Developer: Y	-	-
016	Developer: All	-	-
017	ITB Unit	-	-
018	Cleaning Unit	-	-

WWW.SERVICE-MANUAL.NET

019	Fusing Unit	-	-
020	PTR Unit	-	-
021	Toner Collection Bottle	-	-
023	Fusing Roller(Heating Roller)	-	-
024	Pressure Roller	-	-
100	All	-	-

7807	[SC/Jam Counter Reset]		
	Clears the counters related to SC codes and paper jams.		
001	SC/Jam Clear	-	-

7832	[Self-Diagnose Result Display]		
	Displays the result of the diagnostics.		
001	Diag. Result	*CTL	-

7835	[ACC Counter]		
001	Copy ACC	*CTL	Displays the ACC exectuion times for each mode.
002	Printer ACC	*CTL	

7836	Total Memory Size
	Displays the memory capacity of the controller system.

WWW.SERVICE-MANUAL.NET

7852	[DF Scan Glass Dust Check Counter]		
	Counts the number of occurrences (0 to 65,535) when dust was detected on the scanning glass of the ADF or resets the dust detection counter. Counting is done only if SP4-020-1 (ADF Scan Glass Dust Check) is switched on.		
001	Dust Detection Counter	*CTL	[0 to 9999 / - / 1 /step]
002	Dust Detection Clear Counter	*CTL	[0 to 9999 / - / 1 /step]

7853	[Replacement Counter]		
	Displays the PM parts replacement number.		
001	K Drum Unit	*CTL	[0 to 255 / - / 1 /step]
002	M Drum Unit	*CTL	
003	C Drum Unit	*CTL	
004	Y Drum Unit	*CTL	
005	K Dev Unit	*CTL	
006	M Dev Unit	*CTL	
007	C Dev Unit	*CTL	
008	Y Dev Unit	*CTL	
009	K Developer	*CTL	
010	M Developer	*CTL	
011	C Developer	*CTL	
012	Y Developer	*CTL	
013	ITB Unit	*CTL	[0 to 255 / - / 1 /step]
014	Belt Cleaning Unit	*CTL	

System Maintenance

WWW.SERVICE-MANUAL.NET

015	Fusing Unit	*CTL	
016	PTR Unit	*CTL	
017	Toner Collection Bottle	*CTL	
018	Fusing Roller(Heating Roller)	*CTL	
019	Pressure Roller	*CTL	

7855	[Coverage Range]		
	Sets the color coverage threshold. Coverage rate = Coverage per page / A4 full coverage (dots) x 100 There are three coverage counters: Color 1, Color 2, and Color 3 ▪ [A] 5% (default) is adjustable with SP7855-001. ▪ [B] 20% (default) is adjustable with SP7855-002. Note ▪ The setting value [B] must be set larger than [A]. The total numbers of printouts (BW printing plus color printing) for each coverage range are displayed with the following SPs. ▪ Color1 counter: SP8601-021 ▪ Color2 counter: SP8601-022 ▪ Color3 counter: SP8601-023		
001	Coverage Range 1	*CTL	[1 to 200 / **5** /1]
002	Coverage Range 2	*CTL	[1 to 200 / **20** /1]

WWW.SERVICE-MANUAL.NET

7906	[Prev. Unit PM Counter]		
	(Page or Rotations, Unit, [Color]), Dev.: Development Unit		
	Displays the number of sheets printed with the previous maintenance units.		
001	Page: K Drum Unit	*ENG	[0 to 9999999 / **0** / 1 page/step]
002	Page: M Drum Unit		
003	Page: C Drum Unit		
004	Page: Y Drum Unit		
005	Page: K Dev Unit		
006	Page: M Dev Unit		
007	Page: C Dev Unit		
008	Page: Y Dev Unit		
009	Page: K Developer		
010	Page: M Developer		
011	Page: C Developer		
012	Page: Y Developer		
013	Page: ITB Unit	*ENG	[0 to 9999999 / **0** / 1 page/step]
014	Page: Cleaning Unit		
015	Page: Fusing Unit		
016	Page: PTR Unit		
017	Page: Toner Collection Bottle		
018	Fusing Roller (Heating Roller)		

WWW.SERVICE-MANUAL.NET

019	Pressure Roller		
	Displays the number of revolutions for motors or clutches in the previous maintenance units.		
031	Rotation: K Drum Unit	*ENG	[0 to 9999999 / **0** / 1 mm/step]
032	Rotation: M Drum Unit		
033	Rotation: C Drum Unit		
034	Rotation: Y Drum Unit		
035	Rotation: K Dev Unit		
036	Rotation: M Dev Unit		
037	Rotation: C Dev Unit		
038	Rotation: Y Dev Unit		
039	Rotation: K Developer		
040	Rotation: M Developer		
041	Rotation: C Developer		
042	Rotation: Y Developer		
043	Rotation: ITB Unit	*ENG	[0 to 9999999 / **0** / 1 mm/step]
044	Rotation: Cleaning Unit		
045	Rotation: Fusing Unit		
046	Rotation: PTR Unit		
047	Measurement: Toner Collection bottle		

WWW.SERVICE-MANUAL.NET

048	Rotation: Fusing Roller (Heating Roller)		
049	Rotation: Pressure Roller		
	Displays the number of sheets printed with the previous maintenance unit or toner cartridge.		
061	Rotation (%): K Drum Unit	*ENG	[0 to 255 / **0** / 1 %/step]
062	Rotation (%): M Drum Unit		
063	Rotation (%): C Drum Unit		
064	Rotation (%): Y Drum Unit		
065	Rotation (%): K Dev Unit		
066	Rotation (%): M Dev Unit		
067	Rotation (%): C Dev Unit		
068	Rotation (%): Y Dev Unit		
069	Rotation (%): K Developer	*ENG	[0 to 255 / **0** / 1 %/step]
070	Rotation (%): M Developer		
071	Rotation (%): C Developer		
072	Rotation (%): Y Developer		
073	Rotation (%): ITB Unit		
074	Rotation (%): Cleaning Unit		
075	Rotation (%): Fusing Unit		
076	Rotation (%): PTR Unit		
077	Measurement (%): Toner Collection bottle		

WWW.SERVICE-MANUAL.NET

078	Rotation: Fusing Roller (Heating Roller)		
079	Rotation: Pressure Roller		
	Displays the value given by the following formula: (Current count ÷ Yield count) x 100, where “Current count” is the current values in the counter for the part, and “Yield count” is the recommended yield.		
091	Page (%): K Drum Unit	*ENG	[0 to 255 / **0** / 1 %/step]
092	Page (%): M Drum Unit		
093	Page (%): C Drum Unit		
094	Page (%): Y Drum Unit		
095	Page (%): K Dev Unit		
096	Page (%): M Dev Unit		
097	Page (%): C Dev Unit		
098	Page (%): Y Dev Unit		
099	Page (%): K Developer		
100	Page (%): M Developer		
101	Page (%): C Developer		
102	Page (%): Y Developer		
103	Page (%): ITB Unit	*ENG	[0 to 255 / **0** / 1 %/step]
104	Page (%): Cleaning Unit		
105	Page (%): Fusing Unit		
106	Page (%): PTR Unit		
107	Page (%): Fusing Roller (Heating Roller)		
108	Page (%): Pressure Roller		

WWW.SERVICE-MANUAL.NET

7931	[Toner Bottle Bk]		
	Displays the toner bottle information for Bk.		
001	Machine Serial ID	*ENG	
002	Cartridge Ver		
003	Brand ID		
004	Area ID		
005	Product ID		
006	Color ID		
007	Maintenance ID		
008	New Product Information		
009	Recycle Counter		
010	Date		
011	Serial No.		
012	Toner Remaining		
013	EDP Code		
014	End History		
015	Refill Information		
016	Attachment: Total Counter		
017	Attachment: Color Counter		
018	End: Total Counter		
019	End: Color Counter		
020	Attachment Date		
021	End Date		

WWW.SERVICE-MANUAL.NET

7932	[Toner Bottle M]		
	Displays the toner bottle information for M.		
001	Machine Serial ID	*ENG	-
002	Cartridge Ver		
003	Brand ID		
004	Area ID		
005	Product ID		
006	Color ID		
007	Maintenance ID		
008	New Product Information		
009	Recycle Counter		
010	Date		
011	Serial No.		
012	Toner Remaining	*ENG	-
013	EDP Code		
014	End History		
015	Refill Information		
016	Attachment: Total Counter		
017	Attachment: Color Counter		
018	End: Total Counter		
019	End: Color Counter		
020	Attachment Date		
021	End Date		

WWW.SERVICE-MANUAL.NET

7933	[Toner Bottle C]		
	Displays the toner bottle information for C.		
001	Machine Serial ID	*ENG	-
002	Cartridge Ver		
003	Brand ID		
004	Area ID		
005	Product ID		
006	Color ID		
007	Maintenance ID		
008	New Product Information		
009	Recycle Counter		
010	Date		
011	Serial No.		
012	Toner Remaining	*ENG	-
013	EDP Code		
014	End History		
015	Refill Information		
016	Attachment: Total Counter		
017	Attachment: Color Counter		
018	End: Total Counter		
019	End: Color Counter		
020	Attachment Date		
021	End Date		

WWW.SERVICE-MANUAL.NET

7934	[Toner Bottle Y]		
	Displays the toner bottle information for Y.		
001	Machine Serial ID	*ENG	-
002	Cartridge Ver		
003	Brand ID		
004	Area ID		
005	Product ID		
006	Color ID		
007	Maintenance ID		
008	New Product Information		
009	Recycle Counter		
010	Date		
011	Serial No.		
012	Toner Remaining	*ENG	-
013	EDP Code		
014	End History		
015	Refill Information		
016	Attachment: Total Counter		
017	Attachment: Color Counter		
018	End: Total Counter		
019	End: Color Counter		
020	Attachment Date		
021	End Date		

WWW.SERVICE-MANUAL.NET

7935	[Toner Bottle Log 1: Bk]		
001	Serial No.	*ENG	Displays the toner bottle information log 1 for Bk.
002	Attachment Date		
003	Attachment: Total Counter		
004	Refill Information		
011	Serial No.	*ENG	Displays the toner bottle information log 2 for Bk.
012	Attachment Date		
013	Attachment: Total Counter		
014	Refill Information		
021	Serial No.	*ENG	Displays the toner bottle information log 3 for Bk.
022	Attachment Date		
023	Attachment: Total Counter		
024	Refill Information		
031	Serial No.	*ENG	Displays the toner bottle information log 4 for Bk.
032	Attachment Date		
033	Attachment: Total Counter		
034	Refill Information		
041	Serial No.	*ENG	Displays the toner bottle information log 5 for Bk.
042	Attachment Date		
043	Attachment: Total Counter		
044	Refill Information		

WWW.SERVICE-MANUAL.NET

7936	[Toner Bottle Log 1: M]		
001	Serial No.	*ENG	Displays the toner bottle information log 1 for M.
002	Attachment Date		
003	Attachment: Total Counter		
004	Refill Information		
011	Serial No.	*ENG	Displays the toner bottle information log 2 for M.
012	Attachment Date		
013	Attachment: Total Counter		
014	Refill Information		
021	Serial No.	*ENG	Displays the toner bottle information log 3 for M.
022	Attachment Date		
023	Attachment: Total Counter		
024	Refill Information		
031	Serial No.	*ENG	Displays the toner bottle information log 4 for M.
032	Attachment Date		
033	Attachment: Total Counter		
034	Refill Information		
041	Serial No.	*ENG	Displays the toner bottle information log 5 for M.
042	Attachment Date		
043	Attachment: Total Counter		
044	Refill Information		

WWW.SERVICE-MANUAL.NET

7937	[Toner Bottle Log 1: C]		
001	Serial No.	*ENG	Displays the toner bottle information log 1 for C.
002	Attachment Date		
003	Attachment: Total Counter		
004	Refill Information		
011	Serial No.	*ENG	Displays the toner bottle information log 2 for C.
012	Attachment Date		
013	Attachment: Total Counter		
014	Refill Information		
021	Serial No.	*ENG	Displays the toner bottle information log 3 for C.
022	Attachment Date		
023	Attachment: Total Counter		
024	Refill Information		
031	Serial No.	*ENG	Displays the toner bottle information log 4 for C.
032	Attachment Date		
033	Attachment: Total Counter		
034	Refill Information		
041	Serial No.	*ENG	Displays the toner bottle information log 5 for C.
042	Attachment Date		
043	Attachment: Total Counter		
044	Refill Information		

WWW.SERVICE-MANUAL.NET

7938	[Toner Bottle Log 1: Y]		
001	Serial No.	*ENG	Displays the toner bottle information log 1 for Y.
002	Attachment Date		
003	Attachment: Total Counter		
004	Refill Information		
011	Serial No.	*ENG	Displays the toner bottle information log 2 for Y.
012	Attachment Date		
013	Attachment: Total Counter		
014	Refill Information		
021	Serial No.	*ENG	Displays the toner bottle information log 3 for Y.
022	Attachment Date		
023	Attachment: Total Counter		
024	Refill Information		
031	Serial No.	*ENG	Displays the toner bottle information log 4 for Y.
032	Attachment Date		
033	Attachment: Total Counter		
034	Refill Information		
041	Serial No.	*ENG	Displays the toner bottle information log 5 for Y.
042	Attachment Date		
043	Attachment: Total Counter		
044	Refill Information		

WWW.SERVICE-MANUAL.NET

7950	[Unit Replacement Date]		
	Displays the replacement date of each PM unit.		
001	Image Transfer Belt	*ENG	-
002	Cleaning Unit		
003	Paper Transfer Unit		
004	Fusing Unit		
005	Toner Collection Bottle		
006	K PCU (Drum Unit)		
007	M PCU (Drum Unit)		
008	C PCU (Drum Unit)		
009	Y PCU (Drum Unit)		
010	Fusing Roller (Heating Roller)		
011	Pressure Roller		

7951	[Remaining Day Counter]		
	Displays the remaining unit life of each PM unit.		
001	Page: K Drum Unit	*ENG	[0 to 255 / **255** / 1 day/step]
002	Page: M Drum Unit		
003	Page: C Drum Unit		
004	Page: Y Drum Unit		
005	Page: K Dev Unit		
006	Page: M Dev Unit		

System Maintenance

WWW.SERVICE-MANUAL.NET

007	Page: C Dev Unit		
008	Page: Y Dev Unit		
009	Page: K Developer		
010	Page: M Developer		
011	Page: C Developer		
012	Page: Y Developer		
013	Page: ITB Unit		
014	Page: Cleaning Unit		
015	Page: Fusing Unit		
016	Page: PTR Unit	*ENG	[0 to 255 / **255** / 1 day/step]
017	Page: Fusing Roller (Heating Roller)		
018	Page: Pressure Roller		
031	Rotation: K Drum Unit		
032	Rotation: M Drum Unit		
033	Rotation: C Drum Unit		
034	Rotation: Y Drum Unit		
035	Rotation: K Dev Unit	*ENG	[0 to 255 / **255** / 1 day/step]
036	Rotation: M Dev Unit		
037	Rotation: C Dev Unit		
038	Rotation: Y Dev Unit		
039	Rotation: K Developer		

WWW.SERVICE-MANUAL.NET

040	Rotation: M Developer		
041	Rotation: C Developer		
042	Rotation: Y Developer		
043	Rotation: ITB Unit	*ENG	[0 to 255 / **255** / 1 day/step]
044	Rotation: Cleaning Unit		
045	Rotation: Fusing Unit		
046	Rotation: PTR Unit		
047	Measurement: Toner Collection bottle		
048	Rotation: Fusing Roller (Heating Roller)		
049	Rotation: Pressure Roller		

7952	[PM Yield Setting]		
	Adjusts the unit yield of each PM unit.		
001	Rotation: ITB Unit	*CTL	[0 to 999999999 / **256597000** / 1 mm/step]
002	Rotation: Cleaning Unit	*CTL	[0 to 999999999 / **128299000** / 1 mm/step]
003	Rotation: Fusing Unit	*CTL	[0 to 999999999 / **155595000** / 1 mm/step]
004	Rotation: Paper Transfer Unit	*CTL	[0 to 999999999 / **192448000**/ 1 mm/step]
011	Page: ITB Unit	*CTL	[0 to 999999 / **320000** / 1 sheet/step]
012	Page: Cleaning Unit	*CTL	[0 to 999999 / **160000** / 1 sheet/step]
013	Page: Fusing Unit	*CTL	[0 to 999999 / **160000** / 1 sheet/step]
014	Page: Paper Transfer Unit	*CTL	[0 to 999999 / **240000**/ 1 sheet/step]
021	Day: K Drum Unit	*CTL	Adjusts the threshold day for the near end fro each PM unit.
022	Day: M Drum Unit		

WWW.SERVICE-MANUAL.NET

023	Day: C Drum Unit		[1 to 30 / **15** / 1 day/step] These threshold days are used for @Remote alarms.
024	Day: Y Drum Unit		
025	Day: K Dev Unit		
026	Day: M Dev Unit		
027	Day: C Dev Unit		
028	Day: Y Dev Unit		
029	Day: K Developer		
030	Day: M Developer		
031	Day: C Developer		
032	Day: Y Developer		
033	Day: ITB Unit	*CTL	Adjusts the threshold day for the near end fro each PM unit. [1 to 30 / **15** / 1 day/step] These threshold days are used for @Remote alarms.
034	Day:Cleaning Unit		
035	Day: Fusing Unit		
036	Day: PTR Unit		
037	Day: Toner Collection Botte		
038	Rotation: PCU (Drum Unit): Bk	*CTL	[0 to 999999999 / **0** / 1 mm/step]
039	Rotation: PCU (Drum Unit): M		
040	Rotation: PCU (Drum Unit): C		
041	Rotation: PCU (Drum Unit): Y		

WWW.SERVICE-MANUAL.NET

042	Rotation: Development Unit: Bk	*CTL	[0 to 999999999 / **0** / 1 mm/step]
043	Rotation: Development Unit: M		
044	Rotation: Development Unit: C		
045	Rotation: Development Unit: Y		
046	Rotation: Developer: Bk	*CTL	[0 to 999999999 / **0** / 1 mm/step]
047	Rotation: Developer: M		
048	Rotation: Developer: C		
049	Rotation: Developer: Y		
050	Page: PCU (Drum Unit): Bk	*CTL	[0 to 999999 / **0** / 1 sheet/step]
051	Page: PCU (Drum Unit): M		
052	Page: PCU (Drum Unit): C		
053	Page: PCU (Drum Unit): Y		
054	Page: Development Unit: Bk	*CTL	[0 to 999999 / **0** / 1 sheet/step]
055	Page: Development Unit: M		
056	Page: Development Unit: C		
057	Page: Development Unit: Y		
058	Page: Developer: Bk	*CTL	[0 to 999999 / **0** / 1 sheet/step]
059	Page: Developer: M		

WWW.SERVICE-MANUAL.NET

060	Page: Developer: C		
061	Page: Developer: Y		

7953	[Operation Env. Log: PCU: Bk]		
	Displays the PCDU rotation distance in each specified operation environment. T: Temperature (°C), H: Relative Humidity (%)		
001	T<=0	*CTL	[0 to 99999999 / - / 1 mm/step]
002	0<T<=5:0<=H<30		
003	0<T<=5: 30<=H<70		
004	0<T<=5: 70<=H<=100		
005	5<T<15: 0<=H<30		
006	5<T<15: 30<=H<55		
007	5<T<15: 55<=H<80		
008	5<T<15: 80<=H<=100		
009	15<=T<25: 0<=H<30		
010	15<=T<25: 30<=H<55		
011	15<=T<25: 55<=H<80	*CTL	[0 to 99999999 / - / 1 mm/step]
012	15<=T<25: 80<=H<=100		
013	25<=T<30: 0<=H<30		
014	25<=T<30: 55<=H<55		
015	25<=T<30: 55<=H<80		
016	25<=T<30: 80<=H<=100		

WWW.SERVICE-MANUAL.NET

017	30<=T: 0<=H<30		
018	30<=T: 30<=H<55		
019	30<=T: 55<=H<80		
020	30<=T: 80<=H<=100		

7954	[Operation Env. Log Clear]		
	Clears the operation environment log.		
001		-	

7955	Fusing Stop		
001	Near End: Page	-	[1 to 999999 / **318000** / 1 sheet/step]
	Displays the threshold sheet for the heating roller near end.		
002	End: Page	-	[1 to 999999 / **330000** / 1 sheet/step]
	Displays the threshold sheet for the heating roller end.		
003	Near End: Rotation	-	[0 to 999999999 / **C2.5c: 171698000, C2.5d: 196769000** / 1 mm/step]
	Displays the threshold distance for the heating roller near end.		
004	End: Rotation	-	[0 to 999999999 / **C2.5c: 178177000, C2.5d: 204194000** / 1 mm/step]
	Displays the threshold distance for the heating roller end.		

System Maintenance

WWW.SERVICE-MANUAL.NET

5.9 MAIN SP TABLES-8

5.9.1 SP8-XXX: DATA LOG2

Many of these counters are provided for features that are currently not available, such as sending color faxes, and so on. However, here are some Group 8 codes that when used in combination with others, can provide useful information.

SP Numbers	What They Do
SP8211 to SP8216	The number of pages scanned to the document server.
SP8401 to SP8406	The number of pages printed from the document server
SP8691 to SP8696	The number of pages sent from the document server

Specifically, the following questions can be answered:

- How is the document server actually being used?
- What application is using the document server most frequently?
- What data in the document server is being reused?

Most of the SPs in this group are prefixed with a letter that indicates the mode of operation (the mode of operation is referred to as an "application"). Before reading the Group 8 Service Table, make sure that you understand what these prefixes mean.

WWW.SERVICE-MANUAL.NET

Prefixes	What it means	
T:	Total: (Grand Total).	Grand total of the items counted for all applications (C, F, P, etc.).
C:	Copy application.	Totals (pages, jobs, etc.) executed for each application when the job was not stored on the document server.
F:	Fax application.	
P:	Print application.	
S:	Scan application.	
L:	Local storage (document server)	Totals (jobs, pages, etc.) for the document server. The L: counters work differently case by case. Sometimes, they count jobs/pages stored on the document server; this can be in document server mode (from the document server window), or from another mode, such as from a printer driver or by pressing the Store File button in the Copy mode window. Sometimes, they include occasions when the user uses a file that is already on the document server. Each counter will be discussed case by case.
O:	Other applications (external network applications, for example)	Refers to network applications such as Web Image Monitor. Utilities developed with the SDK (Software Development Kit) will also be counted with this group in the future.

The Group 8 SP codes are limited to 17 characters, forced by the necessity of displaying them on the small LCDs of printers and faxes that also use these SPs. Read over the list of abbreviations below and refer to it again if you see the name of an SP that you do not understand.

WWW.SERVICE-MANUAL.NET

Key for Abbreviations

Abbreviation	What it means
/	"By", e.g. "T:Jobs/Apl" = Total Jobs "by" Application
>	More (2> "2 or more", 4> "4 or more"
AddBook	Address Book
Apl	Application
B/W	Black & White
Bk	Black
C	Cyan
ColCr	Color Create
ColMode	Color Mode
Comb	Combine
Comp	Compression
Deliv	Delivery
DesApl	Designated Application. The application (Copy, Fax, Scan, Print) used to store the job on the document server, for example.
Dev Counter	Development Count, no. of pages developed.
Dup, Duplex	Duplex, printing on both sides
Emul	Emulation
FC	Full Color
FIN	Post-print processing, i.e. finishing (punching, stapling, etc.)
Full Bleed	No Margins
GenCopy	Generation Copy Mode
GPC	Get Print Counter. For jobs 10 pages or less, this counter does not count up. For jobs larger than 10 pages, this counter counts

WWW.SERVICE-MANUAL.NET

Abbreviation	What it means
	up by the number that is in excess of 10 (e.g., for an 11-page job, the counter counts up 11-10 =1)
IFax	Internet Fax
ImgEdt	Image Edit performed on the original with the copier GUI, e.g. border removal, adding stamps, page numbers, etc.
K	Black (YMCK)
LS	Local Storage. Refers to the document server.
LSize	Large (paper) Size
Mag	Magnification
MC	One color (monochrome)
NRS	New Remote Service, which allows a service center to monitor machines remotely. "NRS" is used overseas, "CSS" is used in Japan.
Org	Original for scanning
OrgJam	Original Jam
Palm 2	Print Job Manager/Desk Top Editor: A pair of utilities that allows print jobs to be distributed evenly among the printers on the network, and allows files to moved around, combined, and converted to different formats.
PC	Personal Computer
PGS	Pages. A page is the total scanned surface of the original. Duplex pages count as two pages, and A3 simplex count as two pages if the A3/DLT counter SP is switched ON.
PJob	Print Jobs
Ppr	Paper
PrtJam	Printer (plotter) Jam
PrtPGS	Print Pages

WWW.SERVICE-MANUAL.NET

Abbreviation	What it means
R	Red (Toner Remaining). Applies to the wide format model A2 only. This machine is under development and currently not available.
Rez	Resolution
SC	Service Code (Error SC code displayed)
Scn	Scan
Sim, Simplex	Simplex, printing on 1 side.
S-to-Email	Scan-to-E-mail
SMC	SMC report printed with SP5990. All of the Group 8 counters are recorded in the SMC report.
Svr	Server
TonEnd	Toner End
TonSave	Toner Save
TXJob	Send, Transmission
YMC	Yellow, Magenta, Cyan
YMCK	Yellow, Magenta, Cyan, Black

Note

- All of the Group 8 SPs are reset with SP5 801 1 Memory All Clear.

WWW.SERVICE-MANUAL.NET

8 001	T:Total Jobs	*CTL	These SPs count the number of times each application is used to do a job. [0 to 9999999/ **0** / 1] **Note**: The L: counter is the total number of times the other applications are used to send a job to the document server, plus the number of times a file already on the document server is used.
8 002	C:Total Jobs	*CTL	
8 003	F:Total Jobs	*CTL	
8 004	P:Total Jobs	*CTL	
8 005	S:Total Jobs	*CTL	
8 006	L:Total Jobs	*CTL	

- These SPs reveal the number of times an application is used, not the number of pages processed.
- When an application is opened for image input or output, this counts as one job.
- Interrupted jobs (paper jams, etc.) are counted, even though they do not finish.
- Only jobs executed by the customer are counted. Jobs executed by the customer engineer using the SP modes are not counted.
- When using secure printing (when a password is required to start the print job), the job is counted at the time when either "Delete Data" or "Specify Output" is specified.
- A job is counted as a fax job when the job is stored for sending.
- When a fax is received to fax memory, the F: counter increments but the L: counter does not (the document server is not used).
- A fax broadcast counts as one job for the F: counter (the fax destinations in the broadcast are not counted separately).
- A fax broadcast is counted only after all the faxes have been sent to their destinations. If one transmission generates an error, then the broadcast will not be counted until the transmission has been completed.
- A printed fax report counts as one job for the F: counter.
- The F: counter does not distinguish between fax sending or receiving.
- When a copy job on the document server is printed, SP8022 also increments, and when a print job stored on the document server is printed, SP8024 also increments.
- When an original is both copied and stored on the document server, the C: and L: counters both increment.
- When a print job is stored on the document server, only the L: counter increments.
- When the user presses the Document Server button to store the job on the document server, only the L: counter increments.
- When the user enters document server mode and prints data stored on the document

WWW.SERVICE-MANUAL.NET

server, only the L: counter increments.

- When an image received from Palm 2 is received and stored, the L: counter increments.
- When the customer prints a report (user code list, for example), the O: counter increments. However, for fax reports and reports executed from the fax application, the F: counter increments.

8 011	T:Jobs/LS	*CTL	These SPs count the number of jobs stored to the document server by each application, to reveal how local storage is being used for input. [0 to 9999999/ **0** / 1] The L: counter counts the number of jobs stored from within the document server mode screen at the operation panel.
8 012	C:Jobs/LS	*CTL	
8 013	F:Jobs/LS	*CTL	
8 014	P:Jobs/LS	*CTL	
8 015	S:Jobs/LS	*CTL	
8 016	L:Jobs/LS	*CTL	
8 017	O:Jobs/LS	*CTL	

- When a scan job is sent to the document server, the S: counter increments. When you enter document server mode and then scan an original, the L: counter increments.
- When a print job is sent to the document server, the P: counter increments.
- When a network application sends data to the document server, the O: counter increments.
- When an image from Palm 2 is stored on the document server, the O: counter increments.
- When a fax is sent to the document server, the F: counter increments.

WWW.SERVICE-MANUAL.NET

8 021	T:Pjob/LS	*CTL	These SPs reveal how files printed from the document server were stored on the document server originally. [0 to 9999999/ **0** / 1] The L: counter counts the number of jobs stored from within the document server mode screen at the operation panel.
8 022	C:Pjob/LS	*CTL	
8 023	F:Pjob/LS	*CTL	
8 024	P:Pjob/LS	*CTL	
8 025	S:Pjob/LS	*CTL	
8 026	L:Pjob/LS	*CTL	
8 027	O:Pjob/LS	*CTL	

- When a copy job stored on the document server is printed with another application, the C: counter increments.
- When an application like DeskTopBinder merges a copy job that was stored on the document server with a print job that was stored on the document server, the C: and P: counters both increment.
- When a job already on the document server is printed with another application, the L: counter increments.
- When a scanner job stored on the document server is printed with another application, the S: counter increments. If the original was scanned from within document server mode, then the L: counter increments.
- When images stored on the document server by a network application (including Palm 2), are printed with another application, the O: counter increments.
- When a copy job stored on the document server is printed with a network application (Web Image Monitor, for example), the C: counter increments.
- When a fax on the document server is printed, the F: counter increments.

8 031	T:Pjob/DesApl	*CTL	These SPs reveal what applications were used to output documents from the document server. [0 to 9999999/ **0** / 1] The L: counter counts the number of jobs printed from within the document server mode screen at the operation panel.
8 032	C:Pjob/DesApl	*CTL	
8 033	F:Pjob/DesApl	*CTL	
8 034	P:Pjob/DesApl	*CTL	
8 035	S:Pjob/DesApl	*CTL	
8 036	L:Pjob/DesApl	*CTL	

WWW.SERVICE-MANUAL.NET

8 037	O:Pjob/DesApl	*CTL	

- When documents already stored on the document server are printed, the count for the application that started the print job is incremented.
- When the print job is started from a network application (Desk Top Binder, Web Image Monitor, etc.) the L: counter increments.

8 041	T:TX Jobs/LS	*CTL	These SPs count the applications that stored files on the document server that were later accessed for transmission over the telephone line or over a network (attached to an e-mail, or as a fax image by I-Fax). [0 to 9999999/ **0** / 1] **Note**: Jobs merged for sending are counted separately. The L: counter counts the number of jobs scanned from within the document server mode screen at the operation panel.
8 042	C:TX Jobs/LS	*CTL	
8 043	F:TX Jobs/LS	*CTL	
8 044	P:TX Jobs/LS	*CTL	
8 045	S:TX Jobs/LS	*CTL	
8 046	L:TX Jobs/LS	*CTL	
8 047	O:TX Jobs/LS	*CTL	

- When a stored copy job is sent from the document server, the C: counter increments.
- When images stored on the document server by a network application or Palm2 are sent as an e-mail, the O: counter increments.

WWW.SERVICE-MANUAL.NET

8 051	T:TX Jobs/DesApl	*CTL	These SPs count the applications used to send files from the document server over the telephone line or over a network (attached to an e-mail, or as a fax image by I-Fax). Jobs merged for sending are counted separately. [0 to 9999999/ **0** / 1] The L: counter counts the number of jobs sent from within the document server mode screen at the operation panel.
8 052	C:TX Jobs/DesApl	*CTL	
8 053	F:TX Jobs/DesApl	*CTL	
8 054	P:TX Jobs/DesApl	*CTL	
8 055	S:TX Jobs/DesApl	*CTL	
8 056	L:TX Jobs/DesApl	*CTL	
8 057	O:TX Jobs/DesApl	*CTL	

- If the send is started from Desk Top Binder or Web Image Monitor, for example, then the O: counter increments.

8 061	T:FIN Jobs	*CTL	[0 to 9999999/ **0** / 1]
	These SPs total the finishing methods. The finishing method is specified by the application.		
8 062	C:FIN Jobs	*CTL	[0 to 9999999/ **0** / 1]
	These SPs total finishing methods for copy jobs only. The finishing method is specified by the application.		
8 063	F:FIN Jobs	*CTL	[0 to 9999999/ **0** / 1]
	These SPs total finishing methods for fax jobs only. The finishing method is specified by the application. **Note**: Finishing features for fax jobs are not available at this time.		
8 064	P:FIN Jobs	*CTL	[0 to 9999999/ **0** / 1]
	These SPs total finishing methods for print jobs only. The finishing method is specified by the application.		
8 065	S:FIN Jobs	*CTL	[0 to 9999999/ **0** / 1]
	These SPs total finishing methods for scan jobs only. The finishing method is specified by the application. **Note**: Finishing features for scan jobs are not available at this time.		

WWW.SERVICE-MANUAL.NET

8 066	L:FIN Jobs	*CTL	[0 to 9999999/ **0** / 1]
	These SPs total finishing methods for jobs output from within the document server mode screen at the operation panel. The finishing method is specified from the print window within document server mode.		
8 067	O:FIN Jobs	*CTL	[0 to 9999999/ **0** / 1]
	These SPs total finishing methods for jobs executed by an external application, over the network. The finishing method is specified by the application.		
8 06x 1	Sort	Number of jobs started in Sort mode. When a stored copy job is set for Sort and then stored on the document server, the L: counter increments. (See SP8 066 1)	
8 06x 2	Stack	Number of jobs started out of Sort mode.	
8 06x 3	Staple	Number of jobs started in Staple mode.	
8 06x 4	Booklet	Number of jobs started in Booklet mode. If the machine is in staple mode, the Staple counter also increments.	
8 06x 5	Z-Fold	Number of jobs started In any mode other than the Booklet mode and set for folding (Z-fold).	
8 06x 6	Punch	Number of jobs started in Punch mode. When Punch is set for a print job, the P: counter increments. (See SP8 064 6.)	
8 06x 7	Other	Reserved. Not used.	

WWW.SERVICE-MANUAL.NET

8 071	T:Jobs/PGS	*CTL	[0 to 9999999/ **0** / 1]
	These SPs count the number of jobs broken down by the number of pages in the job, regardless of which application was used.		
8 072	C:Jobs/PGS	*CTL	[0 to 9999999/ **0** / 1]
	These SPs count and calculate the number of copy jobs by size based on the number of pages in the job.		
8 073	F:Jobs/PGS	*CTL	[0 to 9999999/ **0** / 1]
	These SPs count and calculate the number of fax jobs by size based on the number of pages in the job.		
8 074	P:Jobs/PGS	*CTL	[0 to 9999999/ **0** / 1]
	These SPs count and calculate the number of print jobs by size based on the number of pages in the job.		
8 075	S:Jobs/PGS		[0 to 9999999/ **0** / 1]
	These SPs count and calculate the number of scan jobs by size based on the number of pages in the job.		
8 076	L:Jobs/PGS	*CTL	[0 to 9999999/ **0** / 1]
	These SPs count and calculate the number of jobs printed from within the document server mode window at the operation panel, by the number of pages in the job.		
8 077	O:Jobs/PGS	*CTL	[0 to 9999999/ **0** / 1]
	These SPs count and calculate the number of "Other" application jobs (Web Image Monitor, Palm 2, etc.) by size based on the number of pages in the job.		
8 07x 1	1 Page	8 07x 8	21 to 50 Pages
8 07x 2	2 Pages	8 07x 9	51 to 100 Pages
8 07x 3	3 Pages	8 07x 10	101 to 300 Pages
8 07x 4	4 Pages	8 07x 11	301 to 500 Pages

System Maintenance

WWW.SERVICE-MANUAL.NET

8 07x 5	5 Pages	8 07x 12	501 to 700 Pages
8 07x 6	6 to 10 Pages	8 07x 13	701 to 1000 Pages
8 07x 7	11 to 20 Pages	8 07x 14	1001 to Pages

- For example: When a copy job stored on the document server is printed in document server mode, the appropriate L: counter (SP8076 0xx) increments.
- Printing a fax report counts as a job and increments the F: counter (SP 8073).
- Interrupted jobs (paper jam, etc.) are counted, even though they do not finish.
- If a job is paused and re-started, it counts as one job.
- If the finisher runs out of staples during a print and staple job, then the job is counted at the time the error occurs.
- For copy jobs (SP 8072) and scan jobs (SP 8075), the total is calculated by multiplying the number of sets of copies by the number of pages scanned. (One duplex page counts as 2.)
- The first test print and subsequent test prints to adjust settings are added to the number of pages of the copy job (SP 8072).
- When printing the first page of a job from within the document server screen, the page is counted.

WWW.SERVICE-MANUAL.NET

8 111	T:FAX TX Jobs	*CTL	[0 to 9999999/ **0** / 1]
	These SPs count the total number of jobs (color or black-and-white) sent by fax, either directly or using a file stored on the document server, on a telephone line. **Note**: Color fax sending is not available at this time.		
8 113	F: FAX TX Jobs	*CTL	[0 to 9999999/ **0** / 1]
	These SPs count the total number of jobs (color or black-and-white) sent by fax directly on a telephone line. **Note**: Color fax sending is not available at this time.		
8 11x 1	B/W		
8 11x 2	Color		

- These counters count jobs, not pages.
- This SP counts fax jobs sent over a telephone line with a fax application, including documents stored on the document server.
- If the mode is changed during the job, the job will count with the mode set when the job started.
- If the same document is faxed to both a public fax line and an I-Fax at a destination where both are available, then this counter increments, and the I-Fax counter (8 12x) also increments.
- The fax job is counted when the job is scanned for sending, not when the job is sent.

8 121	T:IFAX TX Jobs	*CTL	[0 to 9999999/ **0** / 1]
	These SPs count the total number of jobs (color or black-and-white) sent, either directly or using a file stored on the document server, as fax images using I-Fax. **Note**: Color fax sending is not available at this time.		
8 123	F: IFAX TX Jobs	*CTL	[0 to 9999999/ **0** / 1]
	These SPs count the number of jobs (color or black-and-white) sent (not stored on the document server), as fax images using I-Fax. **Note**: Color fax sending is not available at this time.		

WWW.SERVICE-MANUAL.NET

8 12x 1	B/W
8 12x 2	Color

- These counters count jobs, not pages.
- The counters for color are provided for future use; the color fax feature is not available at this time.
- The fax job is counted when the job is scanned for sending, not when the job is sent.

8 131	T:S-to-Email Jobs	*CTL	[0 to 9999999/ **0** / 1]
	These SPs count the total number of jobs (color or black-and-white) scanned and attached to an e-mail, regardless of whether the document server was used or not.		
8 135	S: S-to-Email Jobs	*CTL	[0 to 9999999/ **0** / 1]
	These SPs count the number of jobs (color or black-and-white) scanned and attached to e-mail, without storing the original on the document server.		
8 13x 1	B/W		
8 13x 2	Color		
8 13x 3	ACS		

- These counters count jobs, not pages.
- If the job is stored on the document server, after the job is stored it is determined to be color or black-and-white then counted.
- If the job is cancelled during scanning, or if the job is cancelled while the document is waiting to be sent, the job is not counted.
- If the job is cancelled during sending, it may or may not be counted, depending on what stage of the process had been reached when the job was cancelled.
- If several jobs are combined for sending to the Scan Router, Scan-to-Email, or Scan-to-PC, or if one job is sent to more than one destination. each send is counted separately. For example, if the same document is sent by Scan-to-Email as well as Scan-to-PC, then it is counted twice (once for Scan-to-Email and once for Scan-to-PC).

WWW.SERVICE-MANUAL.NET

8 141	T:Deliv Jobs/Svr	*CTL	[0 to 9999999/ **0** / 1]
	These SPs count the total number of jobs (color or black-and-white) scanned and sent to a Scan Router server.		
8 145	S: Deliv Jobs/Svr	*CTL	[0 to 9999999/ **0** / 1]
	These SPs count the number of jobs (color or black-and-white) scanned in scanner mode and sent to a Scan Router server.		
8 14x 1	B/W		
8 14x 2	Color		
8 14x 3	ACS		

- These counters count jobs, not pages.
- The jobs are counted even though the arrival and reception of the jobs at the Scan Router server cannot be confirmed.
- If even one color image is mixed with black-and-white images, then the job is counted as a "Color" job.
- If the job is cancelled during scanning, or if the job is cancelled while the document is waiting to be delivered, the job is not counted.
- If the job is cancelled during sending, it may or may not be counted, depending on what stage of the process had been reached when the job was cancelled.
- Even if several files are combined for sending, the transmission counts as one job.

WWW.SERVICE-MANUAL.NET

8 151	T:Deliv Jobs/PC	*CTL	[0 to 9999999/ **0** / 1]
	These SPs count the total number of jobs (color or black-and-white) scanned and sent to a folder on a PC (Scan-to-PC). **Note**: At the present time, 8 151 and 8 155 perform identical counts.		
8 155	S:Deliv Jobs/PC	*CTL	[0 to 9999999/ **0** / 1]
	These SPs count the total number of jobs (color or black-and-white) scanned and sent with Scan-to-PC.		
8 15x 1	B/W		
8 15x 2	Color		
8 15x 3	ACS		

- These counters count jobs, not pages.
- If the job is cancelled during scanning, it is not counted.
- If the job is cancelled while it is waiting to be sent, the job is not counted.
- If the job is cancelled during sending, it may or may not be counted, depending on what stage of the process had been reached when the job was cancelled.
- Even if several files are combined for sending, the transmission counts as one job.

8 161	T:PCFAX TX Jobs	*CTL	These SPs count the number of PC Fax transmission jobs. A job is counted from when it is registered for sending, not when it is sent. [0 to 9999999/ **0** / 1] **Note**: At the present time, these counters perform identical counts.
8 163	F:PCFAX TX Jobs	*CTL	

- This counts fax jobs started from a PC using a PC fax application, and sending the data out to the destination from the PC through the copier.

WWW.SERVICE-MANUAL.NET

8 171	T:Deliv Jobs/WSD	*CTL	These SPs count the pages scanned by WS. [0 to 9999999/ **0** / 1]
8 175	S:Deliv Jobs/WSD	*CTL	
-001	B/W		
-002	Color		
-003	ACS		

8 181	T:Scan to Media Jobs	*CTL	These SPs count the scanned pages in a media by the scanner application. [0 to 9999999/ **0** / 1]
8 185	S:Scan to Media Jobs	*CTL	
-001	B/W		
-002	Color		
-003	ACS		

8 191	T:Total Scan PGS	*CTL	These SPs count the pages scanned by each application that uses the scanner to scan images. [0 to 9999999/ **0** / 1]
8 192	C:Total Scan PGS	*CTL	
8 193	F:Total Scan PGS	*CTL	
8 195	S:Total Scan PGS	*CTL	
8 196	L:Total Scan PGS	*CTL	

- SP 8 191 to 8 196 count the number of scanned sides of pages, not the number of physical pages.
- These counters do not count reading user stamp data, or reading color charts to adjust color.
- Previews done with a scanner driver are not counted.
- A count is done only after all images of a job have been scanned.
- Scans made in SP mode are not counted.

Examples

- If 3 B5 pages and 1 A3 page are scanned with the scanner application but not stored, the

WWW.SERVICE-MANUAL.NET

S: count is 4.

- If both sides of 3 A4 sheets are copied and stored to the document server using the Store File button in the Copy mode window, the C: count is 6 and the L: count is 6.
- If both sides of 3 A4 sheets are copied but not stored, the C: count is 6.
- If you enter document server mode then scan 6 pages, the L: count is 6.

8 201	T:LSize Scan PGS	*CTL	[0 to 9999999/ **0** / 1]
	These SPs count the total number of large pages input with the scanner for scan and copy jobs. Large size paper (A3/DLT) scanned for fax transmission are not counted. **Note**: These counters are displayed in the SMC Report, and in the User Tools display.		
8 203	F: LSize Scan PGS	*CTL	[0 to 9999999/ **0** / 1]
	These SPs count the total number of large pages input with the scanner for fax transmission. **Note**: These counters are displayed in the SMC Report, and in the User Tools display.		
8 205	S:LSize Scan PGS	*CTL	[0 to 9999999/ **0** / 1]
	These SPs count the total number of large pages input with the scanner for scan jobs only. Large size paper (A3/DLT) scanned for fax transmission are not counted. **Note**: These counters are displayed in the SMC Report, and in the User Tools display.		

WWW.SERVICE-MANUAL.NET

8 211	T:Scan PGS/LS	*CTL	These SPs count the number of pages scanned into the document server . [0 to 9999999/ **0** / 1] The L: counter counts the number of pages stored from within the document server mode screen at the operation panel, and with the Store File button from within the Copy mode screen
8 212	C:Scan PGS/LS	*CTL	
8 213	F:Scan PGS/LS	*CTL	
8 215	S:Scan PGS/LS	*CTL	
8 216	L:Scan PGS/LS	*CTL	

- Reading user stamp data is not counted.
- If a job is cancelled, the pages output as far as the cancellation are counted.
- If the scanner application scans and stores 3 B5 sheets and 1 A4 sheet, the S: count is 4.
- If pages are copied but not stored on the document server, these counters do not change.
- If both sides of 3 A4 sheets are copied and stored to the document server, the C: count is 6 and the L: count is 6.
- If you enter document server mode then scan 6 pages, the L: count is 6.

8 221	ADF Org Feeds	*CTL	[0 to 9999999/ **0** / 1]
	These SPs count the number of pages fed through the ADF for front and back side scanning.		
8 221 1	Front	Number of front sides fed for scanning: With an ADF that can scan both sides simultaneously, the Front side count is the same as the number of pages fed for either simplex or duplex scanning. With an ADF that cannot scan both sides simultaneously, the Front side count is the same as the number of pages fed for duplex front side scanning. (The front side is determined by which side the user loads face up.)	
8 221 2	Back	Number of rear sides fed for scanning: With an ADF that can scan both sides simultaneously, the Back count is the same as the number of pages fed for duplex scanning. With an ADF that cannot scan both sides simultaneously, the Back count is the same as the number of pages fed for duplex	

System Maintenance

WWW.SERVICE-MANUAL.NET

		rear-side scanning.

- When 1 sheet is fed for duplex scanning the Front count is 1 and the Back count is 1.
- If a jam occurs during the job, recovery processing is not counted to avoid double counting. Also, the pages are not counted if the jam occurs before the first sheet is output.

8 231	Scan PGS/Mode	*CTL	[0 to 9999999/ **0** / 1]
	These SPs count the number of pages scanned by each ADF mode to determine the work load on the ADF.		
8 231 1	Large Volume	Selectable. Large copy jobs that cannot be loaded in the ADF at one time.	
8 231 2	SADF	Selectable. Feeding pages one by one through the ADF.	
8 231 3	Mixed Size	Selectable. Select "Mixed Sizes" on the operation panel.	
8 231 4	Custom Size	Selectable. Originals of non-standard size.	
8 231 5	Platen	Book mode. Raising the ADF and placing the original directly on the platen.	
8 231 6	Mixed 1side/ 2side	Simplex and Duplex mode.	

- If the scan mode is changed during the job, for example, if the user switches from ADF to Platen mode, the count is done for the last selected mode.
- The user cannot select mixed sizes or non-standard sizes with the fax application so if the original's page sizes are mixed or non-standard, these are not counted.
- If the user selects "Mixed Sizes" for copying in the platen mode, the Mixed Size count is enabled.
- In the SADF mode if the user copies 1 page in platen mode and then copies 2 pages with SADF, the Platen count is 1 and the SADF count is 3.

WWW.SERVICE-MANUAL.NET

8 241	T:Scan PGS/Org	*CTL	[0 to 9999999/ **0** / 1]
	These SPs count the total number of scanned pages by original type for all jobs, regardless of which application was used.		
8 242	C:Scan PGS/Org	*CTL	[0 to 9999999/ **0** / 1]
	These SPs count the number of pages scanned by original type for Copy jobs.		
8 243	F:Scan PGS/Org	*CTL	[0 to 9999999/ **0** / 1]
	These SPs count the number of pages scanned by original type for Fax jobs.		
8 245	S:Scan PGS/Org	*CTL	[0 to 9999999/ **0** / 1]
	These SPs count the number of pages scanned by original type for Scan jobs.		
8 246	L:Scan PGS/Org	*CTL	[0 to 9999999/ **0** / 1]
	These SPs count the number of pages scanned and stored from within the document server mode screen at the operation panel, and with the Store File button from within the Copy mode screen		

	8 241	**8 242**	**8 243**	**8 245**	**8 246**
8 24x 1: Text	Yes	Yes	Yes	Yes	Yes
8 24x 2: Text/Photo	Yes	Yes	Yes	Yes	Yes
8 24x 3: Photo	Yes	Yes	Yes	Yes	Yes
8 24x 4: GenCopy, Pale	Yes	Yes	No	Yes	Yes
8 24x 5: Map	Yes	Yes	No	Yes	Yes
8 24x 6: Normal/Detail	Yes	No	Yes	No	No
8 24x 7: Fine/Super Fine	Yes	No	Yes	No	No
8 24x 8: Binary	Yes	No	No	Yes	No
8 24x 9: Grayscale	Yes	No	No	Yes	No

System Maintenance

WWW.SERVICE-MANUAL.NET

8 24x 10: Color	Yes	No	No	Yes	No
8 24x 11: Other	Yes	Yes	Yes	Yes	Yes

- If the scan mode is changed during the job, for example, if the user switches from ADF to Platen mode, the count is done for the last selected mode.

8 251	T:Scan PGS/ImgEdt	*CTL	These SPs show how many times Image Edit features have been selected at the operation panel for each application. Some examples of these editing features are: ▪ Erase> Border ▪ Erase> Center ▪ Image Repeat ▪ Centering ▪ Positive/Negative [0 to 9999999/ **0** / 1] Note: The count totals the number of times the edit features have been used. A detailed breakdown of exactly which features have been used is not given.
8 252	C:Scan PGS/ImgEdt	*CTL	
8 254	P:Scan PGS/ImgEdt	*CTL	
8 255	S : Scan PGS/ImgEdr	*CTL	
8 256	L:Scan PGS/ImgEdt	*CTL	
8 257	O:Scan PGS/ImgEdt	*CTL	

The L: counter counts the number of pages stored from within the document server mode screen at the operation panel, and with the Store File button from within the Copy mode screen.

WWW.SERVICE-MANUAL.NET

8 261	T:Scan PGS/ColCr	*CTL	-
8 262	C:Scan PGS/ ColCr	*CTL	-
8 265	S:Scn PGS/Color	*CTL	-
8 266	L:Scn PGS/ColCr	*CTL	-
8 26x 1	Color Conversion	These SPs show how many times color creation features have been selected at the operation panel.	
8 26x 2	Color Erase		
8 26x 3	Background		
8 26x 4	Other		

8 281	T:Scan PGS/TWAIN	*CTL	These SPs count the number of pages scanned using a TWAIN driver. These counters reveal how the TWAIN driver is used for delivery functions. [0 to 9999999/ **0** / 1] **Note**: At the present time, these counters perform identical counts.
8 285	S:Scan PGS/TWAIN	*CTL	

8 291	T:Scan PGS/Stamp	*CTL	These SPs count the number of pages stamped with the stamp in the ADF unit. [0 to 9999999/ **0** / 1] The L: counter counts the number of pages stored from within the document server mode screen at the operation panel, and with the Store File button from within the Copy mode screen
8 293	F:Scan PGS/Stamp	*CTL	
8 295	S:Scan PGS/Stamp	*CTL	

System Maintenance

WWW.SERVICE-MANUAL.NET

8 301	T:Scan PGS/Size	*CTL	[0 to 9999999/ **0** / 1]
	These SPs count by size the total number of pages scanned by all applications. Use these totals to compare original page size (scanning) and output (printing) page size [SP 8-441].		
8 302	C:Scan PGS/Size	*CTL	[0 to 9999999/ **0** / 1]
	These SPs count by size the total number of pages scanned by the Copy application. Use these totals to compare original page size (scanning) and output (printing) page size [SP 8-442].		
8 303	F:Scan PGS/Size	*CTL	[0 to 9999999/ **0** / 1]
	These SPs count by size the total number of pages scanned by the Fax application. Use these totals to compare original page size (scanning) and output page size [SP 8-443].		
8 305	S:Scan PGS/Size	*CTL	[0 to 9999999/ **0** / 1]
	These SPs count by size the total number of pages scanned by the Scan application. Use these totals to compare original page size (scanning) and output page size [SP 8-445].		
8 306	L:Scan PGS/Size	*CTL	[0 to 9999999/ **0** / 1]
	These SPs count by size the total number of pages scanned and stored from within the document server mode screen at the operation panel, and with the Store File button from within the Copy mode screen. Use these totals to compare original page size (scanning) and output page size [SP 8-446].		
8 30x 1	A3	-	
8 30x 2	A4		
8 30x 3	A5		
8 30x 4	B4		
8 30x 5	B5		
8 30x 6	DLT		

WWW.SERVICE-MANUAL.NET

8 30x 7	LG	
8 30x 8	LT	
8 30x 9	HLT	
8 30x 10	Full Bleed	
8 30x 254	Other (Standard)	
8 30x 255	Other (Custom)	

8 311	T:Scan PGS/Rez	*CTL	[0 to 9999999/ **0** / 1]
	These SPs count by resolution setting the total number of pages scanned by applications that can specify resolution settings.		
8 315	S: Scan PGS/Rez	*CTL	[0 to 9999999/ **0** / 1]
	These SPs count by resolution setting the total number of pages scanned by applications that can specify resolution settings. **Note**: At the present time, SP8-311 and SP8-315 perform identical counts.		
8 31x 1	1200dpi <		
8 31x 2	600dpi to 1199dpi		
8 31x 3	400dpi to 599dpi		
8 31x 4	200dpi to 399dpi		
8 31x 5	< 199dpi		

- Copy resolution settings are fixed so they are not counted.
- The Fax application does not allow finely-adjusted resolution settings so no count is done for the Fax application.

WWW.SERVICE-MANUAL.NET

8 381	T:Total PrtPGS	*CTL	These SPs count the number of pages printed by the customer. The counter for the application used for storing the pages increments. [0 to 9999999/ **0** / 1] The L: counter counts the number of pages stored from within the document server mode screen at the operation panel. Pages stored with the Store File button from within the Copy mode screen go to the C: counter.
8 382	C:Total PrtPGS	*CTL	
8 383	F:Total PrtPGS	*CTL	
8 384	P:Total PrtPGS	*CTL	
8 385	S:Total PrtPGS	*CTL	
8 386	L:Total PrtPGS	*CTL	
8 387	O:Total PrtPGS	*CTL	

- When the A3/DLT double count function is switched on with SP5104, 1 A3/DLT page is counted as 2.
- When several documents are merged for a print job, the number of pages stored are counted for the application that stored them.
- These counters are used primarily to calculate charges on use of the machine, so the following pages are not counted as printed pages:
  - Blank pages in a duplex printing job.
  - Blank pages inserted as document covers, chapter title sheets, and slip sheets.
  - Reports printed to confirm counts.
  - All reports done in the service mode (service summaries, engine maintenance reports, etc.)
  - Test prints for machine image adjustment.
  - Error notification reports.
  - Partially printed pages as the result of a copier jam.

8 391	LSize PrtPGS	*CTL	[0 to 9999999/ **0** / 1]
	These SPs count pages printed on paper sizes A3/DLT and larger. **Note**: In addition to being displayed in the SMC Report, these counters are also displayed in the User Tools display on the copy machine.		

WWW.SERVICE-MANUAL.NET

8 401	T:PrtPGS/LS	*CTL	These SPs count the number of pages printed from the document server. The counter for the application used to print the pages is incremented. The L: counter counts the number of jobs stored from within the document server mode screen at the operation panel. [0 to 9999999/ **0** / 1]
8 402	C:PrtPGS/LS	*CTL	
8 403	F:PrtPGS/LS	*CTL	
8 404	P:PrtPGS/LS	*CTL	
8 405	S:PrtPGS/LS	*CTL	
8 406	L:PrtPGS/LS	*CTL	

- Print jobs done with Web Image Monitor and Desk Top Binder are added to the L: count.
- Fax jobs done with Web Image Monitor and Desk Top Binder are added to the F: count.

8 411	Prints/Duplex	*CTL	This SP counts the amount of paper (front/back counted as 1 page) used for duplex printing. Last pages printed only on one side are not counted. [0 to 9999999/ **0** / 1]

8 421	T:PrtPGS/Dup Comb	*CTL	[0 to 9999999/ **0** / 1]
	These SPs count by binding and combine, and n-Up settings the number of pages processed for printing. This is the total for all applications.		
8 422	C:PrtPGS/Dup Comb	*CTL	[0 to 9999999/ **0** / 1]
	These SPs count by binding and combine, and n-Up settings the number of pages processed for printing by the copier application.		
8 423	F:PrtPGS/Dup Comb	*CTL	[0 to 9999999/ **0** / 1]
	These SPs count by binding and combine, and n-Up settings the number of pages processed for printing by the fax application.		

WWW.SERVICE-MANUAL.NET

8 424	P:PrtPGS/Dup Comb		*CTL	[0 to 9999999/ **0** / 1]
	These SPs count by binding and combine, and n-Up settings the number of pages processed for printing by the printer application.			
8 425	S:PrtPGS/Dup Comb		*CTL	[0 to 9999999/ **0** / 1]
	These SPs count by binding and combine, and n-Up settings the number of pages processed for printing by the scanner application.			
8 426	L:PrtPGS/Dup Comb		*CTL	[0 to 9999999/ **0** / 1]
	These SPs count by binding and combine, and n-Up settings the number of pages processed for printing from within the document server mode window at the operation panel.			
8 427	O:PrtPGS/Dup Comb		*CTL	[0 to 9999999/ **0** / 1]
	These SPs count by binding and combine, and n-Up settings the number of pages processed for printing by Other applications			
8 42x 1	Simplex> Duplex			
8 42x 2	Duplex> Duplex			
8 42x 3	Book> Duplex			
8 42x 4	Simplex Combine			
8 42x 5	Duplex Combine			
8 42x 6	2>	2 pages on 1 side (2-Up)		
8 42x 7	4>	4 pages on 1 side (4-Up)		
8 42x 8	6>	6 pages on 1 side (6-Up)		
8 42x 9	8>	8 pages on 1 side (8-Up)		
8 42x 10	9>	9 pages on 1 side (9-Up)		
8 42x 11	16>	16 pages on 1 side (16-Up)		
8 42x 12	Booklet			
8 42x 13	Magazine			

WWW.SERVICE-MANUAL.NET

- These counts (SP8 421 to SP8 427) are especially useful for customers who need to improve their compliance with ISO standards for the reduction of paper consumption.
- Pages that are only partially printed with the n-Up functions are counted as 1 page.
- Here is a summary of how the counters work for Booklet and Magazine modes:

Booklet			**Magazine**	
Original Pages	**Count**		**Original Pages**	**Count**
1	1		1	1
2	2		2	2
3	2		3	2
4	2		4	2
5	3		5	4
6	4		6	4
7	4		7	4
8	4		8	4

8 431	T:PrtPGS/ImgEdt	*CTL	[0 to 9999999/ **0** / 1]
	These SPs count the total number of pages output with the three features below, regardless of which application was used.		
8 432	C:PrtPGS/ImgEdt	*CTL	[0 to 9999999/ **0** / 1]
	These SPs count the total number of pages output with the three features below with the copy application.		
8 434	P:PrtPGS/ImgEdt	*CTL	[0 to 9999999/ **0** / 1]
	These SPs count the total number of pages output with the three features below with the print application.		
8 436	L:PrtPGS/ImgEdt	*CTL	[0 to 9999999/ **0** / 1]
	These SPs count the total number of pages output from within the document server mode window at the operation panel with the three		

System Maintenance

WWW.SERVICE-MANUAL.NET

	features below.		
8 437	O:PrtPGS/ImgEdt	*CTL	[0 to 9999999/ **0** / 1]
	These SPs count the total number of pages output with the three features below with Other applications.		
8 43x 1	Cover/Slip Sheet	Total number of covers or slip sheets inserted. The count for a cover printed on both sides counts 2.	
8 43x 2	Series/Book	The number of pages printed in series (one side) or printed as a book with booklet right/left pagination.	
8 43x 3	User Stamp	The number of pages printed where stamps were applied, including page numbering and date stamping.	

8 441	T:PrtPGS/Ppr Size	*CTL	[0 to 9999999/ **0** / 1]
	These SPs count by print paper size the number of pages printed by all applications.		
8 442	C:PrtPGS/Ppr Size	*CTL	[0 to 9999999/ **0** / 1]
	These SPs count by print paper size the number of pages printed by the copy application.		
8 443	F:PrtPGS/Ppr Size	*CTL	[0 to 9999999/ **0** / 1]
	These SPs count by print paper size the number of pages printed by the fax application.		
8 444	P:PrtPGS/Ppr Size	*CTL	[0 to 9999999/ **0** / 1]
	These SPs count by print paper size the number of pages printed by the printer application.		
8 445	S:PrtPGS/Ppr Size	*CTL	[0 to 9999999/ **0** / 1]
	These SPs count by print paper size the number of pages printed by the scanner application.		

WWW.SERVICE-MANUAL.NET

8 446	L:PrtPGS/Ppr Size	*CTL	[0 to 9999999/ **0** / 1]
	These SPs count by print paper size the number of pages printed from within the document server mode window at the operation panel.		
8 447	O:PrtPGS/Ppr Size	*CTL	[0 to 9999999/ **0** / 1]
	These SPs count by print paper size the number of pages printed by Other applications.		
8 44x 1	A3		
8 44x 2	A4		
8 44x 3	A5		
8 44x 4	B4		
8 44x 5	B5		
8 44x 6	DLT		
8 44x 7	LG		
8 44x 8	LT		
8 44x 9	HLT		
8 44x 10	Full Bleed		
8 44x 254	Other (Standard)		
8 44x 255	Other (Custom)		

- These counters do not distinguish between LEF and SEF.

WWW.SERVICE-MANUAL.NET

8 451	PrtPGS/Ppr Tray	*CTL	[0 to 9999999/ **0** / 1]
	These SPs count the number of sheets fed from each paper feed station.		
8 451 1	Bypass Tray	Bypass Tray	
8 451 2	Tray 1	Copier	
8 451 3	Tray 2	Copier	
8 451 4	Tray 3	Paper Tray Unit (Option)	
8 451 5	Tray 4	Paper Tray Unit (Option)	
8 451 6	Tray 5	LCT (Option)	
8 451 7	Tray 6	Currently not used.	
8 451 8	Tray 7	Currently not used.	
8 451 9	Tray 8	Currently not used.	
8 451 10	Tray 9	Currently not used.	

8 461	T:PrtPGS/Ppr Type	*CTL	[0 to 9999999/ **0** / 1]
	These SPs count by paper type the number pages printed by all applications. ▪ These counters are not the same as the PM counter. The PM counter is based on feed timing to accurately measure the service life of the feed rollers. However, these counts are based on output timing. ▪ Blank sheets (covers, chapter covers, slip sheets) are also counted. ▪ During duplex printing, pages printed on both sides count as 1, and a page printed on one side counts as 1.		
8 462	C:PrtPGS/Ppr Type	*CTL	[0 to 9999999/ **0** / 1]
	These SPs count by paper type the number pages printed by the copy application.		

WWW.SERVICE-MANUAL.NET

8 463	F:PrtPGS/Ppr Type	*CTL	[0 to 9999999/ **0** / 1]
	These SPs count by paper type the number pages printed by the fax application.		
8 464	P:PrtPGS/Ppr Type	*CTL	[0 to 9999999/ **0** / 1]
	These SPs count by paper type the number pages printed by the printer application.		
8 466	L:PrtPGS/Ppr Type	*CTL	[0 to 9999999/ **0** / 1]
	These SPs count by paper type the number pages printed from within the document server mode window at the operation panel.		
8 46x 1	Normal		
8 46x 2	Recycled		
8 46x 3	Special		
8 46x 4	Thick		
8 46x 5	Normal (Back)		
8 46x 6	Thick (Back)		
8 46x 7	OHP		
8 46x 8	Other		

8 471	PrtPGS/Mag	*CTL	[0 to 9999999/ **0** / 1]
	These SPs count by magnification rate the number of pages printed.		
8 471 1	< 49%		
8 471 2	50% to 99%		
8 471 3	100%		
8 471 4	101% to 200%		
8 471 5	201% <		

System Maintenance

WWW.SERVICE-MANUAL.NET

- Counts are done for magnification adjusted for pages, not only on the operation panel but performed remotely with an external network application capable of performing magnification adjustment as well.
- Magnification adjustments done with printer drivers with PC applications such as Excel are also counted.
- Magnification adjustments done for adjustments after they have been stored on the document server are not counted.
- Magnification adjustments performed automatically during Auto Reduce/Enlarge copying are counted.
- The magnification rates of blank cover sheets, slip sheets, etc. are automatically assigned a rate of 100%.

8 481	T:PrtPGS/TonSave	*CTL	
8 484	P:PrtPGS/TonSave	*CTL	
	These SPs count the number of pages printed with the Toner Save feature switched on. **Note**: These SPs return the same results as this SP is limited to the Print application. [0 to 9999999/ **0** / 1]		

8 491	T:PrtPGS/Col Mode	*CTL	These SPs count the number of pages printed in the Color Mode by each application.
8 492	C:PrtPGS/Col Mode	*CTL	
8 493	F:PrtPGS/Col Mode	*CTL	
8 496	L:PrtPGS/Col Mode	*CTL	
8 497	O:PrtPGS/Col Mode	*CTL	

WWW.SERVICE-MANUAL.NET

8 49x 1	B/W
8 49x 2	Single Color
8 49x 3	Two Color
8 49x 4	Full Color

8 501	T:PrtPGS/Col Mode	*CTL	These SPs count the number of pages printed in the Color Mode by the print application.
8 504	P:PrtPGS/Col Mode	*CTL	
8 507	O:PrtPGS/Col Mode	*CTL	
8 50x 1	B/W		
8 50x 2	Mono Color		
8 50x 3	Full Color		
8 50x 4	Single Color		
8 50x 5	Two Color		

8 511	T:PrtPGS/Emul		*CTL	[0 to 9999999/ **0** / 1]
	These SPs count by printer emulation mode the total number of pages printed.			
8 514	P:PrtPGS/Emul		*CTL	[0 to 9999999/ **0** / 1]
	These SPs count by printer emulation mode the total number of pages printed.			
8 514 1	RPCS			
8 514 2	RPDL			
8 514 3	PS3			
8 514 4	R98			

System Maintenance

WWW.SERVICE-MANUAL.NET

8 514 5	R16			
8 514 6	GL/GL2			
8 514 7	R55			
8 514 8	RTIFF			
8 514 9	PDF			
8 514 10	PCL5e/5c			
8 514 11	PCL XL			
8 514 12	IPDL-C			
8 514 13	BM-Links	Japan Only		
8 514 14	Other			

- SP8 511 and SP8 514 return the same results as they are both limited to the Print application.
- Print jobs output to the document server are not counted.

WWW.SERVICE-MANUAL.NET

8 521	T:PrtPGS/FIN	*CTL	[0 to 9999999 / **0** / 1]
	These SPs count by finishing mode the total number of pages printed by all applications.		
8 522	C:PrtPGS/FIN	*CTL	[0 to 9999999 / **0** / 1]
	These SPs count by finishing mode the total number of pages printed by the Copy application.		
8 523	F:PrtPGS/FIN	*CTL	[0 to 9999999 / **0** / 1]
	These SPs count by finishing mode the total number of pages printed by the Fax application. **NOTE**: Print finishing options for received faxes are currently not available.		
8 524	P:PrtPGS/FIN	*CTL	[0 to 9999999 / **0** / 1]
	These SPs count by finishing mode the total number of pages printed by the Print application.		
8 525	S:PrtPGS/FIN	*CTL	[0 to 9999999 / **0** / 1]
	These SPs count by finishing mode the total number of pages printed by the Scanner application.		
8 526	L:PrtPGS/FIN	*CTL	[0 to 9999999 / **0** / 1]
	These SPs count by finishing mode the total number of pages printed from within the document server mode window at the operation panel.		
8 52x 1	Sort		
8 52x 2	Stack		
8 52x 3	Staple		
8 52x 4	Booklet		
8 52x 5	Z-Fold		
8 52x 6	Punch		
8 52x 7	Other		

WWW.SERVICE-MANUAL.NET

Note

- If stapling is selected for finishing and the stack is too large for stapling, the unstapled pages are still counted.
- The counts for staple finishing are based on output to the staple tray, so jam recoveries are counted.

8 531	Staples	*CTL	This SP counts the amount of staples used by the machine. [0 to 9999999 / **0** / 1]

8 581	T:Counter	*CTL	[0 to 9999999 / **0** / 1]
	These SPs count the total output broken down by color output, regardless of the application used. In addition to being displayed in the SMC Report, these counters are also displayed in the User Tools display on the copy machine.		
8 581 1	Total		
8 581 2	Total: Full Color		
8 581 3	B&W/Single Color		
8 581 4	Development: CMY		
8 581 5	Development: K		
8 581 6	Copy: Color		
8 581 7	Copy: B/W		
8 581 8	Print: Color		
8 581 9	Print: B/W		
8 581 10	Total: Color		
8 581 11	Total: B/W		
8 581 12	Full Color: A3		
8 581 13	Full Color: B4 JIS or Smaller		

WWW.SERVICE-MANUAL.NET

8 581 14	Full Color Print
8 581 15	Mono Color Print
8 581 16	Full Color GPC
8 581 17	Twin Colour Mode Print
8 581 18	Full Colour Print (Twin)
8 581 19	Mono Colour Print (Twin)
8 581 20	Full Colour Total (CV)
8 581 21	Mono Colour Total (CV)
8 581 22	Full Colour Print (CV)

8 582	C:Counter	*CTL	[0 to 9999999/ **0** / 1]
	These SPs count the total output of the copy application broken down by color output.		
8 582 1	B/W		
8 582 2	Single Color		
8 582 3	Two Color		
8 582 4	Full Color		

8 583	F:Counter	*CTL	[0 to 9999999/ **0** / 1]
	These SPs count the total output of the fax application broken down by color output.		
8 583 1	B/W		
8 583 2	Single Color		

WWW.SERVICE-MANUAL.NET

8 584	P:Counter	*CTL	[0 to 9999999/ **0** / 1]
	These SPs count the total output of the print application broken down by color output.		
8 584 1	B/W		
8 584 2	Mono Color		
8 584 3	Full Color		
8 584 4	Single Color		
8 584 5	Two Color		

8 586	L:Counter	*CTL	[0 to 9999999/ **0** / 1]
	These SPs count the total output of the local storage broken down by color output.		
8 582 1	B/W		
8 582 2	Single Color		
8 582 3	Two Color		
8 582 4	Full Color		

8 591	O:Counter	*CTL	[0 to 9999999/ **0** / 1]
	These SPs count the totals for A3/DLT paper use, number of duplex pages printed, and the number of staples used. These totals are for Other (O:) applications only.		
8 591 1	A3/DLT	-	
8 591 2	Duplex		

WWW.SERVICE-MANUAL.NET

8 601	Coverage Counter	*CTL	[0 to 9999999/ **0** / 1]
	These SPs count the total coverage for each color and the total printout pages for each printing mode.		
8 601 1	B/W	-	
8 601 2	Color		
8 601 11	B/W Printing Pages		
8 601 12	Color Printing Pages		
8 601 21	Coverage Counter 1		
8 601 22	Coverage Counter 2		
8 601 23	Coverage Counter 3		

8 617	SDK Apli Counter	*CTL	[0 to 9999999/ **0** / 1]
	These SPs count the total printout pages for each SDK applicaion.		
8 617 1	SDK-1	-	
8 617 2	SDK-2		
8 617 3	SDK-3		
8 617 4	SDK-4		
8 617 5	SDK-5		
8 617 6	SDK-6		

System Maintenance

WWW.SERVICE-MANUAL.NET

8 631	T:FAX TX PGS	*CTL	[0 to 9999999/ **0** / 1]
	These SPs count by color mode the number of pages sent by fax to a telephone number.		
8 633	F:FAX TX PGS	*CTL	[0 to 9999999/ **0** / 1]
	These SPs count by color mode the number of pages sent by fax to a telephone number.		
8 63x 1	B/W		
8 63x 2	Color		

- If a document has color and black-and-white pages mixed, the pages are counted separately as B/W or Color.
- At the present time, this feature is provided for the Fax application only so SP8631 and SP8633 are the same.
- The counts include error pages.
- If a document is sent to more than one destination with a Group transmission, the count is done for each destination.
- Polling transmissions are counted but polling RX are not.
- Relay, memory, and confidential mailbox transmissions and are counted for each destination.

8 641	T:IFAX TX PGS	*CTL	[0 to 9999999/ **0** / 1]
	These SPs count by color mode the number of pages sent by fax to as fax images using I-Fax.		
8 643	F:IFAX TX PGS	*CTL	[0 to 9999999/ **0** / 1]
	These SPs count by color mode the number of pages sent by Fax as fax images using I-Fax.		
8 64x 1	B/W		
8 64x 2	Color		

WWW.SERVICE-MANUAL.NET

- If a document has color and black-and-white pages mixed, the pages are counted separately as B/W or Color.
- At the present time, this feature is provided for the Fax application only so SP8641 and SP8643 are the same.
- The counts include error pages.
- If a document is sent to more than one destination with a Group transmission, the count is done for each destination.
- Polling transmissions are counted but polling RX are not.
- Relay, memory, and confidential mailbox transmissions and are counted for each destination.

8 651	T:S-to-Email PGS	*CTL	[0 to 9999999/ **0** / 1]
	These SPs count by color mode the total number of pages attached to an e-mail for both the Scan and document server applications.		
8 655	S:S-to-Email PGS	*CTL	[0 to 9999999/ **0** / 1]
	These SPs count by color mode the total number of pages attached to an e-mail for the Scan application only.		
8 65x 1	B/W		
8 65x 2	Color		

Note

- The count for B/W and Color pages is done after the document is stored on the HDD. If the job is cancelled before it is stored, the pages are not counted.
- If Scan-to-Email is used to send a 10-page document to 5 addresses, the count is 10 (the pages are sent to the same SMTP server together).
- If Scan-to-PC is used to send a 10-page document to 5 folders, the count is 50 (the document is sent to each destination of the SMB/FTP server).
- Due to restrictions on some devices, if Scan-to-Email is used to send a 10-page document to a large number of destinations, the count may be divided and counted separately. For example, if a 10-page document is sent to 200 addresses, the count is 10 for the first 100 destinations and the count is also 10 for the second 100 destinations, for a total of 20.).

WWW.SERVICE-MANUAL.NET

8 661	T:Deliv PGS/Svr	*CTL	[0 to 9999999/ **0** / 1]
	These SPs count by color mode the total number of pages sent to a Scan Router server by both Scan and LS applications.		
8 665	S:Deliv PGS/Svr	*CTL	[0 to 9999999/ **0** / 1]
	These SPs count by color mode the total number of pages sent to a Scan Router server by the Scan application.		
8 66x 1	B/W		
8 66x 2	Color		

Note

- The B/W and Color counts are done after the document is stored on the HDD of the Scan Router server.
- If the job is canceled before storage on the Scan Router server finishes, the counts are not done.
- The count is executed even if regardless of confirmation of the arrival at the Scan Router server.

8 671	T:Deliv PGS/PC	*CTL	[0 to 9999999/ **0** / 1]
	These SPs count by color mode the total number of pages sent to a folder on a PC (Scan-to-PC) with the Scan and LS applications.		
8 675	S: Deliv PGS/PC	*CTL	[0 to 9999999/ **0** / 1]
	These SPs count by color mode the total number of pages sent with Scan-to-PC with the Scan application.		
8 67x 1	B/W		
8 67x 2	Color		

WWW.SERVICE-MANUAL.NET

8 681	T:PCFAX TXPGS	*CTL	These SPs count the number of pages sent by PC Fax. These SPs are provided for the Fax application only, so the counts for SP8 681 and SP8 683 are the same. [0 to 9999999/ **0** / 1]
8 683	F:PCFAX TXPGS	*CTL	

- This counts pages sent from a PC using a PC fax application, from the PC through the copier to the destination.
- When sending the same message to more than one place using broadcasting, the pages are only counted once. (For example, a 10-page fax is sent to location A and location B. The counter goes up by 10, not 20.)

8 691	T:TX PGS/LS	*CTL	These SPs count the number of pages sent from the document server. The counter for the application that was used to store the pages is incremented. [0 to 9999999/ **0** / 1] The L: counter counts the number of pages stored from within the document server mode screen at the operation panel. Pages stored with the Store File button from within the Copy mode screen go to the C: counter.
8 692	C:TX PGS/LS	*CTL	
8 693	F:TX PGS/LS	*CTL	
8 694	P:TX PGS/LS	*CTL	
8 695	S:TX PGS/LS	*CTL	
8 696	L:TX PGS/LS	*CTL	

Note

- Print jobs done with Web Image Monitor and Desk Top Binder are added to the count.
- If several documents are merged for sending, the number of pages stored are counted for the application that stored them.
- When several documents are sent by a Fax broadcast, the F: count is done for the number of pages sent to each destination.

WWW.SERVICE-MANUAL.NET

8 701	TX PGS/Port	*CTL	[0 to 9999999/ **0** / 1]
	These SPs count the number of pages sent by the physical port used to send them. For example, if a 3-page original is sent to 4 destinations via ISDN G4, the count for ISDN (G3, G4) is 12.		
8 701 1	PSTN-1		
8 701 2	PSTN-2		
8 701 3	PSTN-3		
8 701 4	ISDN (G3,G4)		
8 701 5	Network		

8 711	T:Scan PGS/Comp	*CTL	[0 to 9999999/ **0** / 1]
8 715	S:Scan PGS/Comp	*CTL	[0 to 9999999/ **0** / 1]
	These SPs count the number of pages sent by each compression mode.		
8 715 1	JPEG/JPEG2000		
8 715 2	TIFF(Multi/Single)		
8 715 3	PDF		
8 715 4	Other		
8 715 5	PDF/Comp		

8 721	T:Deliv PGS/WSD	*CTL	[0 to 9999999/ **0** / 1]
8 725	S: Dvliv PGS/WSD	*CTL	
	These SPs count the number of pages scanned by each scanner mode.		
x 1	B/W	-	
x 2	Color	-	

WWW.SERVICE-MANUAL.NET

8 731	T:Scan PGS/Media	*CTL	[0 to 9999999/ **0** / 1]
8 735	S:Scan PGS/Media	*CTL	
	These SPs count the number of pages scanned and saved in a meia by each scanner mode.		
x 1	B/W	-	
x 2	Color	-	

8 741	RX PGS/Port	*CTL	[0 to 9999999/ **0** / 1]
	These SPs count the number of pages received by the physical port used to receive them.		
8 741 1	PSTN-1	-	
8 741 2	PSTN-2	-	
8 741 3	PSTN-3	-	
8 741 4	ISDN (G3,G4)	-	
8 741 5	Network	-	

8 771	Dev Counter	*CTL	[0 to 9999999/ **0** / 1]
	These SPs count the frequency of use (number of rotations of the development rollers) for black and other color toners.		
8 771 1	Total		
8 771 2	K		
8 771 3	Y		
8 771 4	M		
8 771 5	C		

System Maintenance

WWW.SERVICE-MANUAL.NET

8 781	Toner_Bottle_Info.	*ENG	[0 to 9999999/ **0** / 1]
	These SPs display the number of already replaced toner bottles. **NOTE:** Currently, the data in SP7-833-011 through 014 and the data in SP8-781-001 through 004 are the same.		
8 781 1	Toner: BK	The number of black-toner bottles	
8 781 2	Toner: Y	The number of yellow-toner bottles	
8 781 3	Toner: M	The number of magenta-toner bottles	
8 781 4	Toner: C	The number of cyan-toner bottles	

8 791	LS Memory Remain	*CTL	This SP displays the percent of space available on the document server for storing documents. [0 to 100 / **0** / 1]

8 801	Toner Remain	*CTL	[0 to 100/ **0** / 1]
	These SPs display the percent of toner remaining for each color. This SP allows the user to check the toner supply at any time. **Note:** This precise method of measuring remaining toner supply (1% steps) is better than other machines in the market that can only measure in increments of 10 (10% steps).		
8 801 1	K		
8 801 2	Y		
8 801 3	M		
8 801 4	C		

WWW.SERVICE-MANUAL.NET

8 851	CVr Cnt: 0-10%	*ENG	[0 to 9999999/ **0** / 1]
	These SPs display the number of scanned sheets on which the coverage of each color is from 0% to 10%.		
8 851 11	0 to 2%: BK	8 851 31	5 to 7%: BK
8 851 12	0 to 2%: Y	8 851 32	5 to 7%: Y
8 851 13	0 to 2%: M	8 851 33	5 to 7%: M
8 851 14	0 to 2%: C	8 851 34	5 to 7%: C
8 851 21	3 to 4%: BK	8 851 41	8 to 10%: BK
8 851 22	3 to 4%: Y	8 851 42	8 to 10%: Y
8 851 23	3 to 4%: M	8 851 43	8 to 10%: M
8 851 24	3 to 4%: C	8 851 44	8 to 10%: C

8 861	CVr Cnt: 11-20%	*ENG	[0 to 9999999/ **0** / 1]
	These SPs display the number of scanned sheets on which the coverage of each color is from 11% to 20%.		
8 861 1	BK		
8 861 2	Y		
8 861 3	M		
8 861 4	C		

8 871	CVr Cnt: 21-30%	*ENG	[0 to 9999999/ **0** / 1]
	These SPs display the number of scanned sheets on which the coverage of each color is from 21% to 30%.		
8 871 1	BK		
8 871 2	Y		
8 871 3	M		

WWW.SERVICE-MANUAL.NET

8 871 4	C

8 881	CVr Cnt: 31%-	*ENG	[0 to 9999999/ **0** / 1]
	These SPs display the number of scanned sheets on which the coverage of each color is 31% or higher.		
8 881 1	BK		
8 881 2	Y		
8 881 3	M		
8 881 4	C		

8 891	Page/Toner Bottle	*ENG	[0 to 9999999/ **0** / 1]
	These SPs display the amount of the remaining current toner for each color.		
8 891 1	BK		
8 891 2	Y		
8 891 3	M		
8 891 4	C		

8 901	Page/Toner_prev1	*ENG	[0 to 9999999/ **0** / 1]
	These SPs display the amount of the remaining previous toner for each color.		
8 901 1	BK		
8 901 2	Y		
8 901 3	M		
8 901 4	C		

WWW.SERVICE-MANUAL.NET

8 911	Page/Toner_prev2	*ENG	[0 to 9999999/ **0** / 1]
	These SPs display the amount of the remaining 2nd previous toner for each color.		
8 911 1	BK		
8 911 2	Y		
8 911 3	M		
8 911 4	C		

8 921	Cvr Cnt/Total	*CTL	[0 to 9999999/ **0** / 1]
	Displays the total coverage and total printout number for each color.		
8 921 1	Coverage (%) Bk		
8 921 2	Coverage (%) Y		
8 921 3	Coverage (%) M		
8 921 4	Coverage (%) C		
8 921 11	Coverage /P: Bk		
8 921 12	Coverage /P: Y		
8 921 13	Coverage /P: M		
8 921 14	Coverage /P: C		

8 941	Machine Status	*CTL	[0 to 9999999/ **0** / 1]
	These SPs count the amount of time the machine spends in each operation mode. These SPs are useful for customers who need to investigate machine operation for improvement in their compliance with ISO Standards.		
8 941 1	Operation Time	Engine operation time. Does not include time while controller is saving data to HDD (while engine is not operating).	

WWW.SERVICE-MANUAL.NET

8 941 2	Standby Time	Engine not operating. Includes time while controller saves data to HDD. Does not include time spent in Energy Save, Low Power, or Off modes.
8 941 3	Energy Save Time	Includes time while the machine is performing background printing.
8 941 4	Low Power Time	Includes time in Energy Save mode with Engine on. Includes time while machine is performing background printing.
8 941 5	Off Mode Time	Includes time while machine is performing background printing. Does not include time machine remains powered off with the power switches.
8 941 6	SC	Total time when SC errors have been staying.
8 941 7	PrtJam	Total time when paper jams have been staying during printing.
8 941 8	OrgJam	Total time when original jams have been staying during scanning.
8 941 9	Supply PM Unit End	Total time when toner end has been staying

WWW.SERVICE-MANUAL.NET

8 951	AddBook Register	*CTL		
	These SPs count the number of events when the machine manages data registration.			
8 951 1	User Code/User ID	User code registrations.		[0 to 9999999/ **0** / 1]
8 951 2	Mail Address	Mail address registrations.		
8 951 3	Fax Destination	Fax destination registrations.		
8 951 4	Group	Group destination registrations.		
8 951 5	Transfer Request	Fax relay destination registrations for relay TX.		
8 951 6	F-Code	F-Code box registrations.		
8 951 7	Copy Program	Copy application registrations with the Program (job settings) feature.		[0 to 255 / **0** / 255]
8 951 8	Fax Program	Fax application registrations with the Program (job settings) feature.		
8 951 9	Printer Program	Printer application registrations with the Program (job settings) feature.		
8 951 10	Scanner Program	Scanner application registrations with the Program (job settings) feature.		

System Maintenance

WWW.SERVICE-MANUAL.NET

8 999	Admin. Counter List	*CTL	[0 to 9999999/ **0** / 1]
	Displays the total coverage and total printout number for each color.		
8 999 1	Total		
8 999 2	Copy: Full Color		
8 999 3	Copy: BW		
8 999 4	Copy: Single Color		
8 999 5	Copy: Two Color		
8 999 6	Printer Full Color		
8 999 7	Printer BW		
8 999 8	Printer Single Color		
8 999 9	Printer Two Color		
8 999 10	Fax Print: BW		
8 999 12	A3/DLT		
8 999 13	Duplex		
8 999 14	Coverage: Color (%)		
8 999 15	Coverage: BW (%)		
8 999 16	Coverage: Color Print Page (%)		
8 999 17	Coverage: BW Print Page (%)		
8 999 101	Transmission Total: Color		
8 999 102	Transmission Total: BW		
8 999 103	FAX Transmission		
8 999 104	Scanner Transmission: Color		
8 999 105	Scanner Transmission: BW		

WWW.SERVICE-MANUAL.NET

5.10 MAIN SP TABLES-9

5.10.1 INPUT CHECK TABLE

When entering the Input Check mode, 8 digits display the result for a section. Each digit corresponds to a different device as shown in the table.

Bit No.	7	6	5	4	3	2	1	0
Result	0 or 1	0 or 1	0 or 1	0 or 1	0 or 1	0 or 1	0 or 1	0 or 1

Copier

5803	Description	Reading	
		0	1
5803 1	2nd Tray Size Detection	See table 2 following this table.	
5803 2	1st Tray Set Detection	Set	Not set
5803 3	1st Tray Paper Height Sensor1	See table 1 following this table.	
5803 4	1st Tray Paper Height Sensor2	See table 1 following this table.	
5803 5	2nd Tray Paper Height Sensor1	See table 1 following this table.	
5803 6	2nd Tray Paper Height Sensor2	See table 1 following this table.	
5803 7	1st Tray Paper End Detection	No paper	Paper remaining
5803 8	2nd Tray Paper End Detection	No paper	Paper remaining
5803 9	1st Tray Upper Limit Sensor	Not upper limit	Upper limit
5803 10	2nd Tray Upper Limit Sensor	Not upper limit	Upper limit
5803 11	Bypass Paper Width Detection	See table 3 following this table.	
5803 12	Bypass Paper End Detection	No paper	Paper remaining
5803 13	Bypass Paper Length Detection	See table 3 following this table.	

WWW.SERVICE-MANUAL.NET

5803 14	1st Paper Feed Sensor	Paper detected	Paper not detected
5803 15	2nd Paper Feed Sensor	Paper detected	Paper not detected
5803 16	Exit Sensor	Paper detected	Paper not detected
5803 17	Tray Full Exit Sensor	Paper not full	Paper full
5803 18	Fusing Exit Sensor	Paper not detected	Paper detected
5803 19	Fusing Entrance Sensor	Paper detected	Paper not detected
5803 20	1st Feed Sensor	Paper detected	Paper not detected
5803 21	2nd Feed Sensor	Paper detected	Paper not detected
5803 22	Duplex Exit Sensor	Paper detected	Paper not detected
5803 23	Registration Sensor	Paper detected	Paper not detected
5803 24	Duplex Entrance Sensor	Paper detected	Paper not detected
5803 25	Junction Sensor	Paper detected	Paper not detected
5803 26	2nd Tray Set Detection	Set	Not set
5803 30	Toner End Sensor: Bk	Toner end	Toner remaining
5803 31	Toner End Sensor: M	Toner end	Toner remaining

WWW.SERVICE-MANUAL.NET

5803 32	Toner End Sensor: C	Toner end	Toner remaining
5803 33	Toner End Sensor: Y	Toner end	Toner remaining
5803 34	Drum Phase Sensor: Bk	Actuator not detected	Actuator detected
5803 35	Drum Phase Sensor: M	Actuator not detected	Actuator detected
5803 36	Drum Phase Sensor: C	Actuator not detected	Actuator detected
5803 37	Drum Phase Sensor: Y	Actuator not detected	Actuator detected
5803 38	Interlock Release Detection 1	Front door open	Front door closed
5803 39	Interlock Release Detection 2	Front door open	Front door closed
5803 40	Right Door	Closed	Open
5803 41	Duplex Cover	Closed	Open
5803 42	Toner Collection Bottle Set	Set	Not set
5803 43	Toner Collection Full Sensor	Not full	Full
5803 46	ITB New Unit Detection	Not new	New
5803 50	Airflow Fan: Front: Lock	Normal	Lock
5803 51	Airflow Fan: Rear: Lock	Normal	Lock
5803 52	Fusing Exit Fan: Lock	Normal	Lock
5803 53	2nd Duct Fan: Lock	Normal	Lock
5803 54	3rd Duct Fan: Lock	Normal	Lock

WWW.SERVICE-MANUAL.NET

5803 55	Paper Exit Fan:Lock	Normal	Lock
5803 56	Fusing Coil Fan: Lock	Normal	Lock
5803 57	IH Power Supply Cooling Fan: Lock	Normal	Lock
5803 60	ITB Contact Motor Position	Not contact	Contact
5803 61	Paper Transfer Contact Motor Position	Not contact	Contact
5803 62	Toner Relay Motor: Lock	Normal	Lock
5803 63	ITB Drive Motor: Lock	Normal	Lock
5803 64	K Drum/Development Drive Motor: Lock	Normal	Lock
5803 65	M Drum/Development Drive Motor: Lock	Normal	Lock
5803 66	C Drum/Development Drive Motor: Lock	Normal	Lock
5803 67	Y Drum/Development Drive Motor: Lock	Normal	Lock
5803 68	Fusing Exit Motor:Lock	Normal	Lock
5803 80	HVPS:TTS:SC Detection	SC detected	No SC
5803 81	HVPS:CB:SC Detection	SC detected	No SC
5803 82	HVPS:D:SC Detection	SC detected	No SC
5803 83	Fusing Destination Detection: DOM (Dom)	Set	Not set
5803 84	Fusing Destination Detection: NA	Set	Not set
5803 87	Fusing New Unit Detection	New	Not new

WWW.SERVICE-MANUAL.NET

5803 90	Zero-cross Signal	-	-
5803 91	Fusing Rotation Sensor	Actuator not detected	Actuator detected
5803 92	Fusing Pressue Release Sensor	Not contact	Contact
5803 94	GAVD Open/Close Detection	Closed (LD5V ON)	Open (LD5V OFF)
5803 100	Keycard: Set	Set	Not set
5803 101	Mechanical Counter Bk: Set	Set	Not set
5803 102	Mechanical Counter FC: Set	Set	Not set
5803 103	Key Counter: Set	Set	Not set
5803 110	IOB Version	-	-
5803 200	Scanner HP Sensor	Not HP	HP
5803 201	Platen Cover Sensor	Open	Closed

Table 1: Paper Height Sensor

0: Deactivated, 1: Activated (actuator inside sensor)

Remaining paper	Paper height sensor 1	Paper height sensor 2
Full	0	0
Nearly full	1	0
Near end	1	1
Almost empty	0	1

WWW.SERVICE-MANUAL.NET

Table 2: Paper Size Switch (Tray 2)

Switch 1 is used for tray set detection.

0: Pushed, 1: Not pushed

Models		Switch Location		
North America	**Europe/Asia**	**4 (bit0)**	**3 (bit1)**	**2 (bit2)**
11" x 17" SEF*1 (A3 SEF)	A3 SEF*1 (11" x 17" SEF)	0	0	1
8.5" x 14" SEF*2 (B4 SEF)	B4 SEF*2 (8.5" x 14" SEF)	0	0	0
A4 SEF	A4 SEF	1	1	0
8.5" x 11" SEF	8.5" x 11" SEF	1	1	1
B5 SEF	B5 SEF	0	1	1
11" x 81/2" LEF*3 (A4 LEF)	A4 LEF*3 (11" x 81/2" LEF)	1	0	0
10.5" x 7.25" LEF*4 (B5 LEF)	B5 LEF*4 (10.5" x 7.25" LEF)	0	1	0
A5 LEF	A5 LEF	1	0	1

*1: The machine detects either 11" x 17" SEF or A3 SEF, depending on the setting of SP 5-181-003.

*2: The machine detects either 8.5" x 14" SEF or B4 SEF, depending on the setting of SP 5-181-004.

*3: The machine detects either 11" x 81/2" LEF or A4 LEF, depending on the setting of SP 5-181-002.

*4: The machine detects either B5 LEF or 10.5" x 7.25" LEF, depending on the setting of SP 5-181-005.

WWW.SERVICE-MANUAL.NET

Table 3: Paper Size (By-pass Table)

0: ON, 1: OFF

By-pass Paper Size Sensor				Length Sensor	NA	EU/ASIA
bit3	Bit2	Bit1	Bit0			
1	1	1	1	1	HLT SEF	A6 SEF
0	1	1	1	1	HLT SEF	A6 SEF
0	0	1	1	1	HLT SEF	A5 SEF
1	0	1	1	1	HLT SEF	A5 SEF
1	0	0	1	0	LT/LG SEF*[1]	A4 SEF
1	0	0	1	1	LT/LG SEF*[1]	A5 LEF
1	1	0	1	0	LT/LG SEF*[1]	A4 SEF
1	1	0	1	1	LT/LG SEF*[1]	A5 LEF
1	1	0	0	0	DLT SEF	A3 SEF
1	1	0	0	1	LT LEF	A4 LEF
1	1	1	0	0	DLT SEF	A3 SEF
1	1	1	0	1	LT LEF	A4 LEF

*1: The paper size (LT or LG) can be selected with SP1-007-001.

WWW.SERVICE-MANUAL.NET

ARDF (D540)

6007	Description	Reading	
		0	1
6007 1	Original Length 1 (B5 Detection Sensor)	Paper not detected	Paper detected
6007 2	Original Length 2 (A4 Detection Sensor)	Paper not detected	Paper detected
6007 3	Original Length 3 (LG Detection Sensor)	Paper not detected	Paper detected
6007 4	Original Width 1	Paper not detected	Paper detected
6007 5	Original Width 2	Paper not detected	Paper detected
6007 6	Original Width 3	Paper not detected	Paper detected
6007 7	Original Width 4	Paper not detected	Paper detected
6007 8	Original Width 5	Paper not detected	Paper detected
6007 9	Original Detection	Paper not detected	Paper detected
6007 10	Separation Sensor	Paper not detected	Paper detected
6007 11	Skew Correction	Paper not detected	Paper detected
6007 12	Scan Entrance Secsor	Paper not detected	Paper detected
6007 13	Registration Sensor	Paper not	Paper detected

WWW.SERVICE-MANUAL.NET

		detected	
6007 14	Exit Sensor	Paper not detected	Paper detected
6007 15	Feed Cover Sensor	ADF cover close	ADF cover open
6007 16	Lift Up Sensor	ADF cover close	ADF cover open
6007 17	Inverter Sensor	Paper not detected	Paper detected
6007 18	Pick-Up Roller HP Sensor	Not HP	HP
6007 19	Original Set HP Sensor	Original not detected	Original detected
6007 23	Rear Edge Detection (Not used)	-	-

2000/3000-Sheet (Booklet) Finisher (B804, B805)

6140	Bit	Description	Reading	
			0	1
6140 1		Entrance Sensor	Paper not detected	Paper detected
6140 2		Proof Exit Sensor	Paper not detected	Paper detected
6140 3		Proof Full Detection Sensor	Not Full	Full
6140 4		Trailing Edge Detection: Shift	Paper not detected*1	Paper detected*1
6140 5		Staple Exit Sensor	Paper not detected	Paper detected
6140 6		Shift HP Sensor	Not HP	HP

WWW.SERVICE-MANUAL.NET

6140 7	Shift Exit Sensor	Paper not detected	Paper detected
6140 8	Exit Guide Plate HP Sensor	Not HP	HP
6140 9	Paper Detection Sensor: Staple	Paper not detected	Paper detected
6140 10	Paper Detection Sensor: Shift	Paper not detected	Paper detected
6140 11	Paper Full Sensor: 2000-Sheet	Not Full	Full
6140 12	Oscillating Back Roller HP Sensor	Not HP	HP
6140 13	Jogger HP Sensor	Not HP	HP
6140 14	Exit Junction Gate HP Sensor	HP	Not HP
6140 15	Staple Tray Paper Sensor	Paper not detected	Paper detected
6140 16	Staple Moving HP Sensor	Not HP	HP
6140 17	Skew HP Sensor	Not HP	HP
6140 18	Limit SW	Not Limit	Limit
6140 19	DOOR SW	Closed	Open
6140 20	Stapler 1 Rotation	Not HP	HP
6140 21	Staple Detection	Staple not detected	Staple detected
6140 22	Staple Leading Edge Detection	Staple not detected	Staple detected
6140 23	Punch Moving HP Sensor	Not HP	HP
6140 24	Punch Registration HP Sensor	Not HP	HP

WWW.SERVICE-MANUAL.NET

6140 25	Punch Registratioin Detection Sensor	Paper not detected	Paper detected
6140 26	Punch Chad Full Sensor	Not Full	Full
6140 27	Punch HP	Not HP	HP
6140 28	Punch Selection DIPSW 1	See *1	
6140 29	Punch Selection DIPSW 2	See *1	
6140 30	Stack Junction Gate Open/Closed HP Sensor	Not HP	HP
6140 31	Leading Edge Detection Sensor	Paper not detected	Paper detected
6140 32	Drive Roller HP Sensor	Not HP	HP
6140 33	Arrival Sensor	Paper not detected	Paper detected
6140 34	Rear Edge Fence HP Sensor	Not HP	HP
6140 35	Folder Cam HP Sensor	Not HP	HP
6140 36	Folder Plate HP Sensor	Not HP	HP
6140 37	Folder Pass Sensor	Paper not detected	Paper detected
6140 38	Saddle Full Sensor: Front	Paper not detected*2	Paper detected*2
6140 39	Saddle Full Sensor: Rear	Paper not detected*2	Paper detected*2
6140 40	Saddle Stitch Stapler 1 Rotation: Front	Not HP	HP

WWW.SERVICE-MANUAL.NET

6140 41	Saddle Stitch Detection: Front	Staple not detected	Staple detected
6140 42	Saddle Stitch Leading Edge Detection: Front	Staple not detected	Staple detected
6140 43	Saddle Stitch Stapler 1 Rotation: Rear	Not HP	HP
6140 44	Saddle Stitch Detection: Rear	Staple not detected	Staple detected
6140 45	Saddle Stitch Leading Edge Detection: Rear	Staple not detected	Staple detected
6140 46	Full Sensor: 3000-Sheet	Not Full	Full

*1: Combination of DIP SW 1 and SW 2

DIP SW 1	DIP SW 2	Punch Type
0	0	Japan
1	0	Europe
0	1	North America
1	1	North Europe

*2: Please refer to "Lower Tray (B804 Only)" in the Service Manual for the "2000/3000 (Booklet) Finisher".

WWW.SERVICE-MANUAL.NET

1000-Sheet Finisher (B408)

6139	Description	Reading	
		0	1
6139 1	Entrance Sensor	Paper detected	Paper not detected
6139 2	Shift Exit Sensor (Lower Tray Exit Sensor)	Paper not detected	Paper detected
6139 3	Staple Entrance Sensor (Stapler Tray Entrance Sensor)	Paper detected	Paper not detected
6139 4	Staple Moving HP Sensor (Stapler HP Sensor)	Not home position	Home position
6139 5	Jogger HP Sensor (Jogger Fence HP Sensor)	Not home position	Home position
6139 6	Stack Feed-out Belt HP Sensor	Home position	Not home position
6139 7	Staple Tray Paper Sensor	Paper not detected	Paper detected
6139 8	Staple Rotation Sensor (Staple Rotation HP Sensor)	Not home position	Home position
6139 9	Staple Sensor	Staple detected	Staple not detected
6139 10	Staple READY Detection	Staple detected	Staple not detected
6139 11	Exit Guide Plate HP (Exit Guide Plate HP Sensor)	Not home position	Home position
6139 12	Shift HP Sensor	Not home position	Home position
6139 13	Paper Sensor (Stack Height Sensor)	Output tray not detected	Output tray detected

WWW.SERVICE-MANUAL.NET

6139 14	Tray Lower Sensor (Lower Tray Lower Limit Sensor)	Lower limit	Not lower limit
6139 15	Proof Full Sensor (Paper Limit Sensor)	Not full	Full

Bridge Unit (D386)/ Side Tray (D542)

6150	**Description**	**Reading**	
		0	**1**
6150 1	Bridge/Left: Exit Sensor	Paper detected	Paper not detected
6150 2	Bridge/Left: Feed Sensor	Paper detected	Paper not detected
6150 3	Bridge/Left: Set Detection	Set	Not set
6150 4	Bridge/Left: Exit Cover Detection	Closed	Open
6150 5	Bridge/Left: Feed Cover Detection	Closed	Open

Internal Shift Tray (D388)

6152	**Description**	**Reading**	
		0	**1**
6152 2	Shift: Position Sensor	Tray position: Front	Tray position: Rear

WWW.SERVICE-MANUAL.NET

1 Bin Tray (D536)

6154	Description	Reading	
		0	1
6154 1	1 bin: Set Detection	Set	Not set
6154 2	1 bin: Paper Sensor	Paper detected	Paper not detected

Two-Tray PFU (D537)/ LCIT 2000 (D538)/ LCIT 1200 (D539)

6160	Description	Reading	
		0	1
6160 1	Bank: Tray3: Feed Sensor	Paper not detected	Paper detected
6160 2	Bank: Tray4: Feed Sensor	Paper not detected	Paper detected
6160 3	Bank: Tray5: Feed Sensor	Paper not detected	Paper detected
6160 4	Bank: Tray3: Relay Sensor	Paper not detected	Paper detected
6160 5	Bank: Tray4: Relay Sensor	Paper not detected	Paper detected
6160 6	Bank: Tray5: Relay Sensor	Paper not detected	Paper detected
6160 7	Bank: Feed Cover Detection	Closed	Open

WWW.SERVICE-MANUAL.NET

6160 11	Bank: Palau: Paper Supply Switch	Closed	Open
6160 12	Bank: Palau: Slide Switch	Closed	Open

5.10.2 OUTPUT CHECK TABLE

Copier

5804	Display	Description
5804 3	Drum/Dev Motor: K: HighSpeed	Drum/Development Drive Motor-K: High Speed
5804 4	Drum/Dev Motor: K: MiddleSpeed	Drum/Development Drive Motor-K: Middle Speed
5804 5	Drum/Dev Motor: K: LowSpeed	Drum/Development Drive Motor-M: Low Speed
5804 10	Drum/Dev Motor: M: HighSpeed	Drum/Development Drive Motor- C: High Speed
5804 11	Drum/Dev Motor: M: MiddleSpeed	Drum/Development Drive Motor-Y: Middle Speed
5804 12	Drum/Dev Motor: M: LowSpeed	Drum/Development Drive Motor-Y: Low Speed
5804 17	Drum/Dev Motor: C: HighSpeed	Drum/Development Drive Motor- C: High Speed
5804 18	Drum/Dev Motor: C: MiddleSpeed	Drum/Development Drive Motor-Y: Middle Speed
5804 19	Drum/Dev Motor: C: LowSpeed	Drum/Development Drive Motor-Y: Low Speed

WWW.SERVICE-MANUAL.NET

5804 24	Drum/Dev Motor: Y: HighSpeed	Drum/Development Drive Motor- C: High Speed
5804 25	Drum/Dev Motor: Y: MiddleSpeed	Drum/Development Drive Motor-Y: Middle Speed
5804 26	Drum/Dev Motor: Y: LowSpeed	Drum/Development Drive Motor-Y: Low Speed
5804 31	Fusing Exit Motor: HighSpeed	Fusing/Paper Exit Motor: High Speed
5804 32	Fusing Exit Motor: MiddleSpeed	Fusing/Paper Exit Motor: Middle Speed
5804 33	Fusing Exit Motor: LowSpeed	Fusing/Paper Exit Motor: Low Speed
5804 35	Fusing Exit Motor: LLowSpeed	Fusing/Paper Exit Motor: LLow Speed
5804 37	Toner Relay Motor	Toner Transport Motor
5804 40	Image Transfer Motor: HighSpeed	ITB Drive Motor: High Speed
5804 41	Image Transfer Motor: MiddleSpeed	ITB Drive Motor: Middle Speed
5804 42	Image Transfer Motor: LowSpeed	ITB Drive Motor: Low Speed
5804 50	Feed Motor: HighSpeed	Paper Feed Motor: High Speed
5804 51	Feed Motor: IncreaseSpeed	Paper Feed Motor: Increase Speed
5804 52	Feed Motor: MiddleSpeed	Paper Feed Motor: Middle Speed
5804 53	Feed Motor: MiddleIncreaseSpeed	Paper Feed Motor: Middle Increase Speed
5804 54	Feed Motor: LowSpeed	Paper Feed Motor: Low Speed
5804 55	Feed Motor: LowInceraseSpeed	Paper Feed Motor: Low Incerase Speed
5804 60	Regist Motor: HighSpeed	Registration Motor: High Speed
5804 61	Regist Motor: MiddleSpeed	Registration Motor: Middle Speed
5804 62	Regist Motor: LowSpeed	Registration Motor: Low Speed

WWW.SERVICE-MANUAL.NET

5804 67	Duplex Feed M:CW:HighSpeed	Duplex/By-pass Motor: CW: High Speed
5804 68	Duplex Feed M:CW:MiddleSpeed	Duplex/By-pass Motor: CW: Middle Speed
5804 69	Duplex Feed Motor: CW: LowSpeed	Duplex/By-pass Motor: CW: Low Speed
5804 74	Duplex Feed M:CCW:HighSpeed	Duplex/By-pass Motor: CCW: High Speed
5804 75	Duplex Feed M:CCW:MiddleSpeed	Duplex/By-pass Motor: CCW: Middle Speed
5804 76	Duplex Feed Motor: CCW: LowSpeed	Duplex/By-pass Motor: CCW: Low Speed
5804 81	Duplex Reverse M:CW:HighSpeed	Duplex Inverter Motor: CW: High Speed
5804 82	Duplex Reverse M:CW:MiddleSpeed	Duplex Inverter Motor: CW: Middle Speed
5804 83	Duplex Reverse Motor: CW: LowSpeed	Duplex Inverter Motor: CW: Low Speed
5804 88	Duplex Reverse M:CCW:HighSpeed	Duplex Inverter Motor: CCW: High Speed
5804 89	Duplex Reverse M:CCW:MiddleSpeed	Duplex Inverter Motor: CCW: Middle Speed
5804 90	Duplex Reverse Motor: CCW: LowSpeed	Duplex Inverter Motor: CCW: Low Speed
5804 95	ITB Contact Motor	Image Transfer Belt Contact Motor
5804 96	Paper Transfer Contact Motor	Paper Transfer Contact Motor
5804 97	1st Tray Lift Motor: Up	Tray Lift Motor 1: Lift Up
5804 98	1st Tray Lift Motor: Down	Tray Lift Motor 1: Lift Down

WWW.SERVICE-MANUAL.NET

5804 99	2nd Tray Lift Motor: Up	Tray Lift Motor 2: Lift Up
5804 100	2nd Tray Lift Motor: Down	Tray Lift Motor 2: Lift Down
5804 102	Fusing Pressue Release Motor	Pressure Roller Contact Motor
5804 104	Polygon Moter: LL	Polygon Motor: LL
5804 105	Polygon Moter: L	Polygon Motor: L
5804 107	Polygon Moter: HH	Polygon Motor: HH
5804 110	Air Flow Fan: Front	Ventilation Fan - Front
5804 111	Air Flow Fan:Rear	Ventilation Fan - Rear
5804 112	Fusing Fan:H	Fusing Fan: High Speed
5804 113	Fusing Fan:L	Fusing Fan: Low Speed
5804 114	PSU Cooling Fan	PSU Fan 1: High Speed
5804 115	2nd Duct Fan: H	Duct Fan 2: High Speed
5804 117	3rd Duct Fan: H	Duct Fan 3: High Speed
5804 119	Paper Exit Fan:H	Paper Exit Fan: High Speed
5804 121	Fusing Coil Fan	IH Coil Fan
5804 122	IH Power Supply Cooling Fan	IH Inverter Fan
5804 126	Development Clutch: Bk	Development Clutch-K
5804 127	Development Clutch: M	Development Clutch-M
5804 128	Development Clutch: C	Development Clutch-C
5804 129	Development Clutch: Y	Development Clutch-Y
5804 130	Toner Bottle Clutch: Bk	Toner Bottle Clutch-K
5804 131	Toner Bottle Clutch: M	Toner Bottle Clutch-M

WWW.SERVICE-MANUAL.NET

5804 132	Toner Bottle Clutch: C	Toner Bottle Clutch-C
5804 133	Toner Bottle Clutch:Y	Toner Bottle Clutch-Y
5804 134	Toner Supply Pump: Bk	Toner Supply Clutch: Bk
5804 135	Toner Supply Pump: M	Toner Supply Clutch: M
5804 136	Toner Supply Pump: C	Toner Supply Clutch: C
5804 137	Toner Supply Pump: Y	Toner Supply Clutch: Y
5804 138	1st Paper Feed Clutch	Paper Feed Clutch 1
5804 139	2nd Paper Feed Clutch	Paper Feed Clutch 2
5804 140	Bypass Feed Clutch	By-pass Feed Clutch
5804 141	Bypass Pickup Solenoid	Bypass Pickup Solenoid
5804 143	TD Sensor Shutter Solenoid	ID Sensor Shutter Solenoid
5804 144	Exit Junction Solenoid	Junction Gate 1 Solenoid
5804 145	1st Feed Pickup Solenoid	1st Pickup Solenoid
5804 146	2st Feed Pickup Solenoid	2nd Pickup Solenoid
5804 161	PCL: Bk	
5804 162	PCL: M	
5804 163	PCL: C	
5804 164	PCL: Y	
5804 166	HST Sensor:Bk	TD Sensor:Bk
5804 167	HST Sensor: M	TD Sensor: M
5804 168	HST Sensor: C	TD Sensor: C
5804 169	HST Sensor: Y	TD Sensor: Y

WWW.SERVICE-MANUAL.NET

5804 170	Toner End Sensor: Bk	Toner End Sensor: Bk
5804 171	Toner End Sensor: M	Toner End Sensor: M
5804 172	Toner End Sensor: C	Toner End Sensor: C
5804 173	Toner End Sensor: Y	Toner End Sensor: Y
5804 174	TM Sensor: Front	ID Sensor: Front
5804 175	TM Sensor: Center	ID Sensor: Center
5804 176	TM Sensor: Rear	ID Sensor: Rear
5804 177	TM Sensor: M	ID Sensor: M
5804 178	TM Sensor: C	ID Sensor: C
5804 179	TM Sensor: Y	ID Sensor: Y
5804 181	PP:Charge AC:Y:HighSpeed	-
5804 182	PP:Charge AC:Y:MiddleSpeed	-
5804 183	PP:Charge AC:Y:LowSpeed	-
5804 186	PP:Development:K	-
5804 187	PP:Development:M	-
5804 188	PP:Development:C	-
5804 189	PP:Development:Y	-
5804 190	PP:Separation	-
5804 192	RFID ON/OFF: K	-
5804 193	RFID ON/OFF: Y	-
5804 194	RFID ON/OFF: C	-
5804 195	RFID ON/OFF: M	-

WWW.SERVICE-MANUAL.NET

5804 196	RFID COM ON:K	-
5804 197	RFID COM ON: Y	-
5804 198	RFID COM ON: C	-
5804 199	RFID COM ON: M	-
5804 202	Scanner Lamp	-
5804 216	LD1: K	-
5804 217	LD2: K	-
5804 218	LD1: M	-
5804 219	LD2: M	-
5804 220	LD1: C	-
5804 221	LD2: C	-
5804 222	LD1: Y	-
5804 223	LD2: Y	-
5804 224	PP:ITB:K	PP: Image Transfer Roller: K
5804 225	PP:ITB:M	PP: Image Transfer Roller: M
5804 226	PP:ITB:C	PP: Image Transfer Roller: C
5804 227	PP:ITB:Y	PP: Image Transfer Roller: Y
5804 228	PP:PTR:+	PP: Paper Transfer Roller:+
5804 229	PP:PTR:-	PP: Paper Transfer Roller:-
5804 231	HVPS: ChargeDC: K	-
5804 232	HVPS: ChargeDC: M	-
5804 233	HVPS: ChargeDC: C	-

WWW.SERVICE-MANUAL.NET

5804 234	HVPS: ChargeDC: Y	-
5804 237	PP:Charge AC:K:HighSpeed	-
5804 238	PP:Charge AC:K:MiddleSpeed	-
5804 239	HVPS: ChargeAC: K: LowSpeed	-
5804 244	PP:Charge AC:M:HighSpeed	-
5804 245	PP:Charge AC:M:MiddleSpeed	-
5804 246	HVPS: ChargeAC: M: LowSpeed	-
5804 251	PP:Charge AC:C:HighSpeed	-
5804 252	PP:Charge AC:C:MiddleSpeed	-
5804 253	HVPS: ChargeAC: C: LowSpeed	-

WWW.SERVICE-MANUAL.NET

ARDF (D540)

6008	Display	Description
6008 1	Pick-Up Motor Forward	
6008 2	Pick-Up Motor Reverse	
6008 3	Feed Motor Forward	Feed Motor-Forward rotation
6008 4	Feed Motor Reverse	Feed Motor-Reverse rotation
6008 5	Relay Motor Forward	Transport Motor- Forward rotation
6008 7	Inverter Motor Reverse	Transport Motor- Forward rotation
6008 8	Inverter Motor Reverse	-
6008 11	Inverter Solenoid	-
6008 12	Stamp	Stamp Solenoid
6008 13	Fan Motor	-
6008 14	Feed Clutch	-
6008 15	Feed Solenoid	-

WWW.SERVICE-MANUAL.NET

1000-Sheet Finisher (B408)

6144	Display	Description
6144 1	Relay Up Motor	Upper Transport Motor
6144 2	Relay Down Motor	Lower Transport Motor
6144 3	Exit Motor	-
6144 4	Proof Junction Gate SOL	Tray Junction Gate Solenoid
6144 5	Tray Up Motor	Lower Tray Lift Motor
6144 6	Jogger Motor	Jogger Fence Motor
6144 7	Staple Moving Motor	Stapler Motor
6144 8	Staple Motor	Stapler Hammer
6144 9	Staple Junction Gate SOL	Stapler Junction Gate Solenoid
6144 10	Positioning Roller Solenoid	Positioning Roller Solenoid
6144 11	Stack Feed-out Motor	-
6144 12	Shift Motor	-
6144 13	Exit Guide Plate Motor	-

WWW.SERVICE-MANUAL.NET

2000/3000-Sheet (Booklet) Finisher (B804/B805)

6145	Display	Description
6145 1	Entrance Motor	Finisher Entrance Motor
6145 2	Upper Feed Motor	Upper Transport Motor
6145 3	Lower Feed Motor	Lower Transport Motor
6145 4	Exit Motor	Upper/Proof Tray Exit Motor
6145 5	Knock Roller Motor	Clamp Roller Retraction Motor
6145 6	Shift Motor	Shift Roller Motor
6145 7	Exit Guide Plate Open/Close Motor	Exit Guide Plate Motor
6145 8	Tray Lift Motor	Upper Tray Lift Motor
6145 9	Oscillating Back Roller Motor	Stacking Sponge Roller Motor
6145 10	Jogger Motor	Jogger Fence Motor
6145 11	Stack Feed-out Motor	Feed Out Belt Motor
6145 12	Staple Moving Motor	Corner Stapler Movement Motor
6145 13	Staple Skew Motor	Corner Stapler Rotation Motor
6145 14	Staple Motor	Corner Stapler EH530
6145 15	Upper Junction Gate Solenoid	Proof Junction Gate Solenoid
6145 16	Lower Junction Gate Solenoid	Stapling Tray Junction Gate Solenoid
6145 17	Knock Solenoid	Stapling Edge Pressure Plate Solenoid
6145 18	Trailing Edge Hold Solenoid	Positioning Roller Solenoid
6145 19	Saddle Stitch Hold Solonoid	Booklet Pressure Roller Solenoid

WWW.SERVICE-MANUAL.NET

6145 20	Stack Junction Gate Open/Close Motor	Stack Junction Gate Motor
6145 21	Trailing Edge Fence Moving Motor	Fold Unit Bottom Fence Lift Motor
6145 22	Saddle Stitch Staple Motor: Front	Booklet Stapler EH185R: Front
6145 23	Saddle Stitch Staple Motor: Rear	Booklet Stapler EH185R: Rear
6145 24	Folder Plate Motor	Fold Plate Motor
6145 25	Folder Roller Motor	Fold Roller Motor
6145 26	Drive Roller Oscillating Motor	Positioning Roller Motor
6145 27	Punch Motor	Punch Drive Motor
6145 28	Punch Moving Motor	Punch Movement Motor
6145 29	Punch Registration Detection Motor	Paper Position Sensor Slide Motor

WWW.SERVICE-MANUAL.NET

Bridge Unit (D386)/ Side Tray (D542)

6151	Display	Description
6151 1	Bridge/Left: Feed Motor: Current Selection	Bridge: Feed Motor: Current switching signal
6151 2	Bridge/Left: Feed Motor:Reset	Bridge: Feed Motor:Reset
6151 3	Bridge/Left: Feed Motor:Enable	Bridge: Feed Motor:Enable
6151 6	Bridge/Left: Feed Motor: High Speed	Bridge: Feed Motor: High Speed
6151 7	Bridge/Left: Feed Motor: Middle Speed	Bridge: Feed Motor: Middle Speed
6151 8	Bridge/Left: Feed Motor: Low Speed	Bridge: Feed Motor: Low Speed
6151 11	Bridge/Left: Junction Solenoid	Bridge: Junction Solenoid

Shift Tray (D388)

6153	Display	Description
6153 1	Shift Tray: Motor	-

1 Bin Tray (D536)

6155	Display	Description
6155 1	1 bin: Junction Solenoid	-

WWW.SERVICE-MANUAL.NET

Two-Tray PFU (D537)/ LCIT 2000 (D538)/ LCIT 1200 (D539)

6161	Display	Description
6161 5	Bank1: Feed Motor: HighSpeed	Feed Motor:High Speed (D537/D538)
6161 6	Bank1: Feed Motor: IncreaseSpeed	Feed Motor: Increase Speed (D537/D538)
6161 8	Bank1: Feed Motor: MiddleSpeed	Feed Motor: Middle Speed (D537/D538)
6161 9	Bank1: Feed Motor: LowSpeed	Feed Motor: Low Speed (D537/D538)
6161 10	Bank1: Feed Motor: LowIncreaseSpeed	Feed Motor:Low Increase Speed (D537/D538)
6161 15	Bank2: Feed Motor:HighSpeed	Feed Motor:High Speed (D537)
6161 16	Bank2: Feed Motor: IncreaseSpeed	Feed Motor: Increase Speed (D537)
6161 18	Bank2: Feed Motor: MiddleSpeed	Feed Motor: Middle Speed (D537)
6161 19	Bank2: Feed Motor: LowSpeed	Feed Motor: Low Speed (D537)
6161 20	Bank2: Feed Motor: LowIncreaseSpeed	Feed Motor: Low Increase Speed (D537)
6161 30	Bank:Tray3: PU Solenoid	Pick-up Solenoid (D537/ D538)
6161 31	Bank:Tray4: PU Solenoid	Pick-up Solenoid (D537/ D539)
6161 32	Bank:Tray5: PU Solenoid	Pick-up Solenoid (D539)
6161 35	Bank:Tray3: Feed Clutch	Pick-up Solenoid (D537/ D538)
6161 36	Bank:Tray4: Feed Clutch	Pick-up Solenoid (D537/ D539)
6161 37	Bank:Tray5: Feed Clutch	Pick-up Solenoid (D539)

WWW.SERVICE-MANUAL.NET

5.10.3 PRINTER SERVICE MODE

SP1-XXX (Service Mode)

1001	Bit Switch			
001	Bit Switch 1		0	1
	bit 0	DFU	-	-
	bit 1	DFU	-	-
	bit 2	DFU	-	-
	bit 3	**No I/O Timeout**	0: Disable	1: Enable
		Enable: The MFP I/O Timeout setting will have no effect. I/O Timeouts will never occur.		
	bit 4	**SD Card Save Mode**	0: Disable	1: Enable
		Enable: Print jobs will be saved to an SD Card in the GW SD slot (☛ "Card Save Function" in "System Maintenance" chapter of the Field Service Manual).		
	bit 5	DFU	-	-
	bit 6	DFU	-	-
	bit 7	**[RPCS,PCL]: Printable area frame border**	0: Disable	1: Enable
		Enable: The machine prints all RPCS and PCL jobs with a border on the edges of the printable area.		

WWW.SERVICE-MANUAL.NET

1001	Bit Switch			
002	Bit Switch 2		0	1
	bit 0	DFU	-	-
	bit 1	DFU	-	-
	bit 2	**Applying a collation Type**	Shift Collate	Normal Collate
		A collation type (shift or normal) will be applied to all jobs that do not already have a 'Collate Type' configured. Note ▪ If #5-0 is enabled, this Bit Switch has no effect.		
	bit 3	**[PCL5e/c,PS]: PDL Auto Switching**	0: Enable	1: Disable
		Disable: The MFPs ability to change the PDL processor mid-job. Some host systems submit jobs that contain both PS and PCL5e/c. If Auto PDL switching is disabled, these jobs will not be printed properly.		
	bit 4	DFU	-	-
	bit 5	DFU	-	-
	bit 6	DFU	-	-
	bit 7	DFU	-	-

System Maintenance

WWW.SERVICE-MANUAL.NET

1001	Bit Switch			
003	Bit Switch 3		0	1
	bit 0	DFU	-	-
	bit 1	DFU	-	-
	bit 2	**[PCL5e/c]: Legacy HP compatibility**	0: Disable	1: Enable
		Enable: Uses the same left margin as older HP models such as HP4000/HP8000. In other words, the left margin defined in the job (usually "<ESC>*r0A") will be changed to "<ESC>*r1A"		
	bit 3	DFU	-	-
	bit 4	DFU	-	-
	bit 5	DFU	-	-
	bit 6	DFU	-	-
	bit 7	DFU	-	-

WWW.SERVICE-MANUAL.NET

1001	**Bit Switch**			
004	Bit Switch 4 **DFU**		0	1
	bit 0	DFU	-	-
bit 1	DFU	-	-	
bit 2	DFU	-	-	
bit 3	**IPDS print-side reversal**	0: Disable	1: Enable	
		If enabled, the simplex pages of IPDS jobs will be printed on the front side because of printing on the back side of the page. This might reduce printing speed.		
bit 4	DFU	-	-	
bit 5	DFU	-	-	
bit 6	DFU	-	-	
bit 7	DFU	-	-	

1001	Bit Switch			
005	Bit Switch 5		0	1
	bit 0	**Show "Collate Type", "Staple Type" and "Punch Type" buttons on the operation panel.**	Disable	Enable
		If enabled, users will be able to configure a Collate Type, Staple Type, and Punch Type from the operation panel. The available types will depend on the device and configured options. After enabling the function, the settings will appear under: "User Tools > Printer Features > System"		
	bit 1	**Multiple copies if a paper size or type mismatch occurs**	0: Disable (Single copy)	1: Enable (Multiple copy)

System Maintenance

WWW.SERVICE-MANUAL.NET

		If a paper size or type mismatch occurs during the printing of multiple copies, only a single copy is output by default. Using this BitSw, the device can be configured to print all copies even if a paper mismatch occurs.		
	bit 2	DFU	-	-
	bit 3	**[PS] PS Criteria**	Pattern3	Pattern1
		Change the number of PS criterion used by the PS interpreter to determine whether a job is PS data or not. Pattern3: includes most PS commands. Pattern1: A small number of PS tags and headers		
	bit 4	**Increase max number of the stored jobs to 1000 jobs.**	Disable (100)	Enable (1000)
		Enable: Changes the maximum number of jobs that can be stored on the HDD via Job Type settings to 1000. The default is 100.		
	bit 5	**Face-up output**	Disable	Enable
		Enable: All print jobs will be output face-up in the destination tray.		
	bit 6	**Method for determining the image rotation for the edge to bind on.**	0: Disable	1: Enable
		If enabled, the image rotation will be performed as they were in the specifications of older models for the binding of pages of mixed orientation jobs. The old models are below: - PCL: Pre-04A models - PS/PDF/RPCS:Pre-05S models		
	bit 7	Letterhead mode printing	0: Disable	1: Enable (Duplex)

1001	Bit Switch		
006	Bit Switch 6 **DFU**	-	-

WWW.SERVICE-MANUAL.NET

1001	Bit Switch			
007	Bit Switch 7		0	1
	bit 0	**Print path**	0: Disable	1: Enable
		If enabled, simplex pages (in mixed simplex/duplex PS/PCL5 jobs only) and the last page of an odd paged duplex job (PS, PCL5, PCL6), are always routed through the duplex unit. Not having to switch paper paths increases the print speed slightly.		
	bit 1 to 7	DFU	-	-

1001	Bit Switch			
008	Bit Switch 8		0	1
	bit 0	DFU	-	-
	bit 1	DFU	-	-
	bit 2	DFU	-	-
	bit 3	**[PCL,PS]: Allow BW jobs to print without requiring User Code**	Disable	Enable
		Enable: BW jobs submitted without a user code will be printed even if usercode authentication is enabled. Note ▪ Color jobs will not be printed without a valid user code.		
	bit 4	DFU	-	-
	bit 5	DFU	-	-
	bit 6	DFU	-	-
	bit 7	DFU	-	-

System Maintenance

WWW.SERVICE-MANUAL.NET

1001	Bit Switch			
005	Bit Switch 9		0	1
	bit 0	**PDL Auto Detection timeout of jobs submitted via USB or Parallel Port (IEEE 1284).**	"Disabled (Immediately)"	"Enabled (10 seconds)"
		To be used if PDL auto-detection fails. A failure of PDL autodetection doesn't necessarily mean that the job can't be printed. This bit switch tells the device whether to time-out immediately (default) upon failure or to wait 10 seconds.		
	bit 1	DFU	-	-
	bit 2	**Job Cancel**	Disabled (Not cancelled)	Enabled (Cancelled)
		If this bit switch, all jobs will be cancelled after a jam occurs. Note: If this bitsw is enabled, printing under the following conditions might result in problems: - Job submission via USB or Parallel Port - Spool printing (WIM >Configuration > Device Settings > System)		
	bit 3	**PCL/PS bypass tray paper rotation (SEF/LEF)**	0: Disable	1: Enable
		This bitsw causes the device to revert to the behavior of previous generations. It only takes effect if "Bypass Tray Setting Priority" = "Driver/Command". Previous spec (bitsw=1): If a standard sized paper mismatch occurred in the bypass tray, the MFP always prompted for SEF paper. If this bitsw=0 (default) then in the event of a standard sized paper mismatch, the MFP will always prompt for paper of the rotation (SEF/LEF) determined by the MFP bypass tray paper setting or by the bypass tray sensor.		
	Bit 4 to 7	DFU	-	-

WWW.SERVICE-MANUAL.NET

1003	[Clear Setting]
1003 1	Initialize Printer System
	Initializes settings in the "System" menu of the user mode.
1003 3	Delete Program

1004	[Print Summary]
1004 1	Print Summary
	Prints the service summary sheet (a summary of all the controller settings).

1005	[Display Version]
1005 1	Disp. Version
	Displays the version of the controller firmware.

1006	[Sample/Locked Print]	*CTL	**0**: Linked, 1: On
1006 1	Enables and disables the document server. When you select "0," the document server is enabled or disabled in accordance with Copy Service Mode SP5-967. When you select "1," the document server is enabled regardless of Copy Service Mode SP5-967.		

1101	[Data Recall]		
	Recalls a set of gamma settings. This can be either a) the factory setting, b) the previous setting, or c) the current setting.		
1101 1	Factory	*CTL	
1101 2	Previous		
1101 3	Current		
1101 4	ACC		

System Maintenance

WWW.SERVICE-MANUAL.NET

1102	[Resolution Setting]
	Selects the printing mode (resolution) for the printer gamma adjustment.
1102 1	**2400x600 Photo**, 1800x600 Photo, 600 x 600 Photo, 2400x600 Text, 1800x600, Text, 600x600 Text

1103	[Test Page]
	Prints the test page to check the color balance before and after the gamma adjustment.
1103 1	Color Gray Scale
1103 2	Color Pattern

1104	[Gamma Adjustment]		
	Adjusts the printer gamma for the mode selected in the "Mode Selection" menu.		
1104 1	Black: Highlight	*CTL	[0 to 30 / **15** / 1/step]
1104 2	Black: Shadow		
1104 3	Black: Middle		
1104 4	Black: IDmax		
1104 21	Cyan: Highlight	*CTL	[0 to 30 / **15** / 1/step]
1104 22	Cyan: Shadow		
1104 23	Cyan: Middle		
1104 24	Cyan: IDmax		
1104 41	Magenta: Highlight	*CTL	[0 to 30 / **15** / 1/step]
1104 42	Magenta: Shadow		

WWW.SERVICE-MANUAL.NET

1104 43	Magenta: Middle		
1104 44	Magenta: IDmax		
1104 61	Yellow: Highlight	*CTL	[0 to 30 / **15** / 1/step]
1104 62	Yellow: Shadow		
1104 63	Yellow: Middle		
1104 64	Yellow: IDmax		

1105	[Save Tone Control Value]
	Stores the print gamma adjusted with the "Gamma Adj." menu item as the current setting. Before the machine stores the new "current setting", it moves the data currently stored as the "previous setting" memory storage location.
1105 1	Save Tone Control Value

1106	[Toner Limit]		
	Adjusts the maximum toner amount for image development.		
1106 1	Toner Limit Value	*CTL	[100 to 400 / **260** / 1 %/step]

System Maintenance

WWW.SERVICE-MANUAL.NET

5.10.4 SCANNER SP MODE

SP1-xxx (System and Others)

1004	[Compression Type]		
	Selects the compression type for binary picture processing.		
1004 1	Compression Type	*CTL	[1 to 3 / **1** / 1/step] 1: MH, 2: MR, 3: MMR

1005	[Erase margin]		
	Creates an erase margin for all edges of the scanned image. If the machine has scanned the edge of the original, create a margin. This SP is activated only when the machine uses TWAIN scanning.		
1005 1	Range from 0 to 5 mm	*CTL	[0 to 5 / **0** / 1 mm/step]

1009	[Remote scan disable]	*CTL	[0 or 1 / **0** / -] 0: enable, 1: disable
1009 1	Enable or disable remote scan.		

1010	[Non Display Clear Light PDF]	*CTL	[0 or 1 / **0** / -] 0: Display, 1: No display
1010 1	Enable or disable remote scan.		

WWW.SERVICE-MANUAL.NET

SP2-XXX (Scanning-image quality)

2021	[Compression Level (Gray-scale)]		
	Selects the compression ratio for grayscale processing mode (JPEG) for the three settings that can be selected at the operation panel.		
2021 1	Level 3 (Middle Image Quality)	*CTL	[5 to 95 / **40** / 1 /step]
2021 2	Level 2 (High Image Quality)		[5 to 95 / **50** / 1 /step]
2021 3	Level 4 (Low Image Quality)		[5 to 95 / **30** / 1 /step]
2021 4	Level 1 (Highest Image Quality)		[5 to 95 / **60** / 1 /step]
2021 5	Level 5 (Lowest Image Quality)		[5 to 95 / **20** / 1 /step]

2024	[Compression ratio of ClearLight PDF]		
	Selects the compression ratio for clearlight PDF for the two settings that can be selected at the operation panel.		
2024 1	Compression Ratio (Normal image)	*CTL	[5 to 95 / **25** / 1 /step]
2024 2	Compression Ratio (High comp image)		[5 to 95 / **20** / 1 /step]

System Maintenance

WWW.SERVICE-MANUAL.NET

5.11 FIRMWARE UPDATE

To update the firmware for this machine, you must have the new version of the firmware downloaded onto an SD (Secure Digital) Card. The SD Card is inserted into SD Card Slot 2 on the left rear side of the controller box.

5.11.1 TYPE OF FIRMWARE

There are several types of firmware as shown below.

Type of firmware	Function	Location of firmware	Message shown
System/Copy	Operating system	Controller Board	System/Copy
Engine		BICU	Engine
Lcdc		LCDC	Lcdc
NetworkSupport		Controller Board	
Language 1		LCDC	Language 1
Language 2		LCDC	Language 2
RPCS NOTE		Controller Board	RPCS
PCL (PCLXL)		Controller Board	PCL (PCLXL)
MediaPrint:JPEG/TIFF		Controller Board	MediaPrint:JPEG/TIF
FONT		Controller Board	FONT
FONT1		Controller Board	FONT1
NetworkDocBox		Controller	NetworkDocBox
Printer		Controller	Printer
Scanner		Controller	Scanner
Websupport		Controller	Websupport
WebUapl		Controller	WebUapl

WWW.SERVICE-MANUAL.NET

Note

- The RCPS firmware is required for the XPS driver even though the RPCS driver is not used for this model.

5.11.2 BEFORE YOU BEGIN

An SD card is a precision device. Always observe the following precautions when you handle SD cards:

- Always switch the machine off before you insert an SD card. Never insert the SD card into the slot with the power on.
- Do not remove the SD card from the service slot after the power has been switched on.
- Never switch the machine off while the firmware is downloading from the SD card.
- Keep SD cards in a safe location where they are not exposed to high temperature, high humidity, or exposure to direct sunlight.
- Always handle SD cards with care. Do not bend or scratch them. Do not let the SD card get exposed to shock or vibration.
- Make sure that the write protection of an SD card is unlocked when you download an application to it. If not, downloading fails and a download error (e.g. Error Code 44) occurs during a firmware upgrade.

Keep the following points in mind when you use the firmware update software:

- "Upload" means to send data from the machine to the SD card. "Download" means to send data from the SD card to the machine.
- To select an item on the LCD, touch the appropriate button on the soft touch-screen of the LCD, or, press the appropriate number key on the 10-key pad of the operation panel. For example, when "Exit (0)" shows on the screen you can touch the Exit button on the screen, or, press the "0" button on the operation panel of the copier.
- Make sure that the machine is disconnected from the network to prevent a print job for arriving while the firmware update is in progress before you start the firmware update procedure.

WWW.SERVICE-MANUAL.NET

5.11.3 UPDATING FIRMWARE

Preparation

- If the SD card is blank, copy the entire "romdata" folder onto the SD card.
- If the card already contains the "romdata" folder, copy the "D088" folder onto the card.

If the card already contains folders up to "D088", copy the necessary firmware files (e.g. D088xxxx.fwu) into this folder.

Note

- Do not put multiple machine firmware programs on the same SD card. Copy the only model firmware you want.

Updating Procedure

1. Turn the main power switch off.
2. Remove the slot cover (x 1).
3. Insert the SD card into SD Card Slot 2. Make sure the label on the SD card faces the front side of the machine.
4. Slowly push the SD card into the slot so it locks in place. You will hear it click. Make sure the SD card locks in place.

   Note

   - To remove the SD, push it in to unlock the spring lock. Then release it so it pops out of the slot.
5. Disconnect the network cable from the copier if the machine is connected to a network.
6. Switch the main power switch on. After about 45 seconds, the initial version update screen appears on the LCD in English.
7. On the screen, touch the button or press the corresponding number key on the operation panel to select the item in the menu that you want to update.

ROM/NEW	What it means
ROM:	Tells you the number of the module and name of the version currently installed. The first line is the module number, the second line the version name.
NEW:	Tells you the number of the module and name version on the SD card. The first line is the module number, the second line the version name.

WWW.SERVICE-MANUAL.NET

Note

- Controller, engine and operation panel firmware cannot be updated at the same time. It is recommended to update firmware modules one by one.

8. Touch "UpDate (#)" (or #) to start the update.

Note

- The progress bar does not show for the operation panel firmware after you touch "OpPanel". The power on key flashes on and off at 0.5 s intervals when the LCDC firmware is updating. The power key flashes on and off at three seconds intervals when the update is finished.

9. The "Update is Done" message appears on the operation panel after completing the updating. The message differs depending on the firmware that has been updated.
10. Switch the copier main power switch off when you see the "Update is Done" message or follow the procedure that is displayed on the operation panel.
11. Press in the SD card to release it. Then remove it from the slot.
12. Switch the copier on for normal operation.

Error Messages

An error message shows in the first line if an error occurs during the download.
The error code consists of the letter "E" and a number. The example above shows error "E24" displayed. For details, refer to the Error Message Table. (☛ "Handling Firmware Update Errors" in this section)

Firmware Update Error

If a firmware update error occurs, this means the update was cancelled during the update because the module selected for update was not on the SD card.

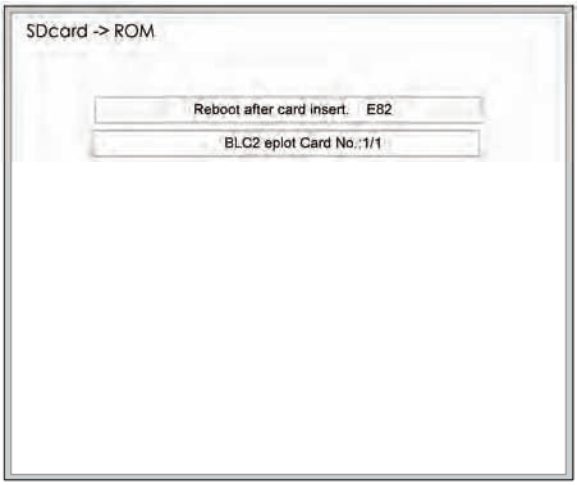

WWW.SERVICE-MANUAL.NET

Recovery after Power Loss

If the ROM update is interrupted as a result of accidental loss of power while the firmware is updating, then the correct operation of the machine cannot be guaranteed after the machine is switched on again. If the ROM update does not complete successfully for any reason, then in order to ensure the correct operation of the machine, the ROM update error will continue to show until the ROM is updated successfully.
In this case, insert the card again and switch on the machine to continue the firmware download automatically from the card without the menu display.

5.11.4 UPDATING THE LCDC FOR THE OPERATION PANEL

Do the following procedure to update the LCDC (LCD Control Board).

1. Turn the copier main switch off.
2. Remove the SD slot cover (x 1).
3. Insert the SD card into SD Card Slot 2.
4. Switch the copier main switch on.
5. The initial screen opens in English after about 45 seconds.
6. Touch "Ope Panel.xx".
7. "xx" differs depending on the destination.
8. Touch "UpDate(#) or ( ) to start the update.
9. Downloading starts after about 9 seconds.
10. The operation panel goes off and the main power on key flashes in red at 0.5 s intervals when the data is downloading. The same key starts flashing in green at 1 s intervals when the update is finished.
11. Switch the copier main power switch off and remove the SD card. Then switch the copier on.

WWW.SERVICE-MANUAL.NET

5.11.5 UPDATE PROCEDURE FOR APP2ME PROVIDER

Follow this procedure to update App2Me if a new version is available.

1. Push the [User/Tools] key on the operation panel.
2. If an administrator setting is registered for the machine, Step 3 and Step 4 are required. Otherwise, skip to step 5.
3. Push [Login/Logout] on the operation panel.
4. Login with the administrator user name and password.
5. Touch "Extended Feature Settings" twice on the LCD.
6. Touch each of the applications until the status changes to "Stop".
7. Turn the machine off, and then remove the VM Card.

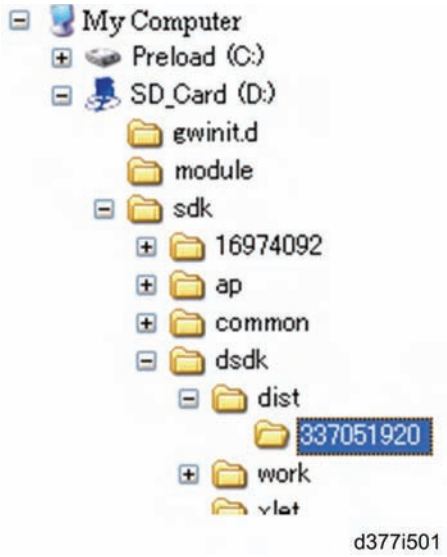

8. Prepare the newer App2Me Provider zip file from the Firmware Download Center, and then unzip the zip file. (The folder name is "337051920".)
9. Copy the App2Me Provider folder into the specified path for the VM card. The path is: "SD_Card Drive¥ sdk¥dsdk¥dist¥337051920"
10. Turn the SD card label face to the front of the machine, and then push it slowly into Slot 2 (lower slot) until you hear a click.
11. Turn the main power switch on.
12. Press [User Tools] on the operation panel.
13. Touch the "Extended Feature Settings" button twice.
14. Touch the "Extended Feature Info" tab on the LCD.
15. Touch the "App2Me" line.
16. Set the setting of the "Auto Start" to "On".
17. Touch the "Exit" button.
18. Exit the [User Tools/Counter] settings.

WWW.SERVICE-MANUAL.NET

Important

- App2Me and all other running applications on the VM card must be shut down before removing the VM card in order to update the firmware, back up NVRAM, install the browser unit, or execute application move or undo with SP5873.
- After the VM card is re-inserted, App2Me (and any other VM card applications used by the customer) must be switched on after the machine is switched on.

5.11.6 BROWSER UNIT UPDATE PROCEDURE

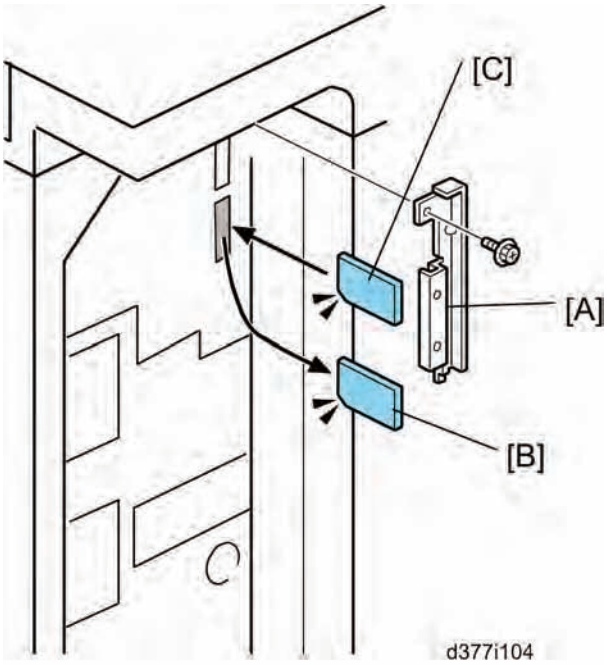

1. Remove the slot cover [A] for SD cards (x 1).
1. Remove the VM card [B] from slot 2.
2. Turn the SD-card label face of the browser unit to the front of the machine. Then push it slowly into slot 2 [C] until you hear a click.
3. Plug in and turn on the main power switch.
4. Push the "User Tools" key.
   - If an administrator setting is registered for the machine, step 5 and 6 are required. Otherwise, skip to the step 7
5. Push the "Login/ Logout" key.
6. Login with the administrator user name and password.
7. Touch "Extended Feature Settings" twice on the LCD.
8. Touch "Uninstall" on the LCD.
9. Touch the "Browser" line
10. Confirmation message appears on the LCD.
11. Touch "Yes" to proceed.
12. Reconfirmation message appears on the LCD.

WWW.SERVICE-MANUAL.NET

13. Touch "Yes" to uninstall the browser unit.
14. You will see "Uninstalling the extended feature... Please wait.", and then "Completed".
15. Touch "Exit" to go back to the setting screen.
16. Exit "User/Tools" setting, and then turn off the main power switch.
17. Remove the SD card of the browser unit from SD card slot 2.
18. Overwrite the updated program in the "sdk" folder of the browser unit application with PC.
19. Do the "Installation Procedure" to install the browser unit.

5.11.7 HANDLING FIRMWARE UPDATE ERRORS

An error message shows in the first line if an error occurs during a download. The error code consists of the letter "E" and a number ("E20", for example).

Error Message Table

Code	Meaning	Solution
20	Cannot map logical address	Make sure the SD card is inserted correctly.
21	Cannot access memory	HDD connection incorrect or replace hard disks.
22	Cannot decompress compressed data	Incorrect ROM data on the SD card, or data is corrupted.
23	Error occurred when ROM update program started	Controller program abnormal. If the second attempt fails, replace controller board.
24	SD card access error	Make sure SD card inserted correctly, or use another SD card.
30	No HDD available for stamp data download	HDD connection incorrect or replace hard disks.
31	Data incorrect for continuous download	Insert the SD card with the remaining data required for the download, the re-start the procedure.

WWW.SERVICE-MANUAL.NET

32	Data incorrect after download interrupted	Execute the recovery procedure for the intended module download, then repeat the installation procedure.
33	Incorrect SD card version	Incorrect ROM data on the SD card, or data is corrupted.
34	Module mismatch - Correct module is not on the SD card)	SD update data is incorrect. Acquire the correct data (Japan, Overseas, OEM, etc.) then install again.
35	Module mismatch – Module on SD card is not for this machine	SD update data is incorrect. The data on the SD card is for another machine. Acquire correct update data then install again.
36	Cannot write module – Cause other than E34, E35	SD update data is incorrect. The data on the SD card is for another machine. Acquire correct update data then install again.
40	Engine module download failed	Replace the update data for the module on the SD card and try again, or replace the BICU board.
42	Operation panel module download failed	Replace the update data for the module on the SD card and try again, or replace the LCDC.
43	Stamp data module download failed	Replace the update data for the module on the SD card and try again, or replace the hard disks.
44	Controller module download failed	Replace the update data for the module on the SD card and tray again, or replace controller board.
50	Electronic confirmation check failed	SD update data is incorrect. The data on the SD card is for another machine. Acquire correct update data then install again.

WWW.SERVICE-MANUAL.NET

5.12 INSTALLING ANOTHER LANGUAGE

Many languages are available. But you can only switch between two languages at a time. Do the following procedure to select the two languages you want. You can select both of the languages you want from the user interface on the operation panel.

1. Switch the copier main power switch off.
2. Remove the SD slot cover (x 1).
3. Insert the SD card with the language data into SD Card Slot 2.
4. Switch the copier main power switch on. The initial screen opens after about 45 seconds.
5. Touch "Language Data (2)" on the screen (or press the "2" key).

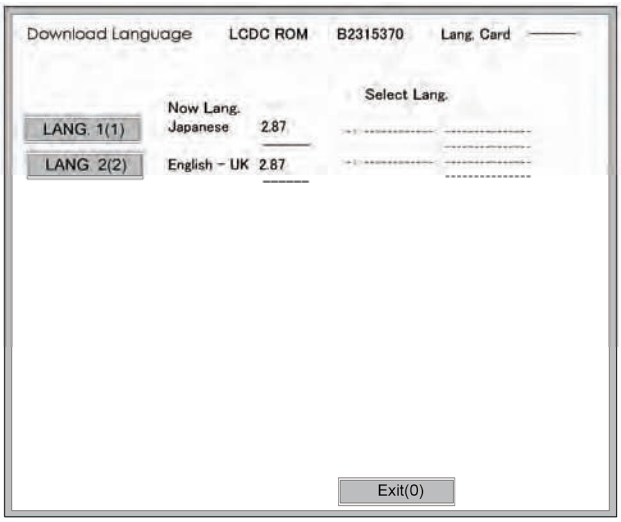

6. Touch "LANG. 1(1)" or "LANG. 2(2)"

Key	What it does
LANG. 1(1)	Touch this button on the screen (or press the "1" key on the 10-key pad) to open the next screen so you can select the 1st language.
LANG. 1(2)	Touch this button on the screen (or press the "2" key on the 10-key pad) to open the next screen so you can select the 2nd language.
Exit (0)	Touch this key on the screen (or press the "0" key on the 10-key pad) to quit the update procedure and return to normal screen.

System Maintenance

WWW.SERVICE-MANUAL.NET

7. Touch "LANG 1(1)" to select the 1st Language. Touch "LANG (2)" to select the 2nd Language.

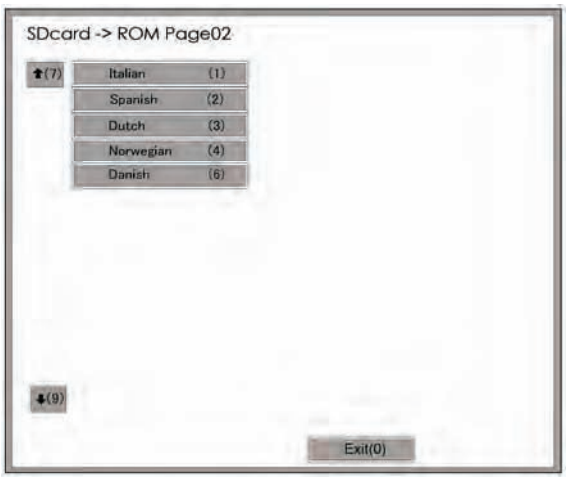

8. Touch the appropriate button on the screen (or press the number on the 10-keypad) to select a language as the 1st (or 2nd) language.
   - If a language is already selected, it will show in reverse.
   - Touching "Exit (0)" returns you to the previous screen.
9. If you do not see the language that you want to select, touch "↑(7)" or "↓(9)" on the screen (or press the "7" or "9" key) to show more choices.

   The Download Screen opens after you select a language.

   The 1st or 2nd language selected for updating shows.

   The following show to right of the selection:
   - 1. The first column shows the language currently selected.
   - 2. The 2nd column shows the language selected to replace that language.

   The example below shows that the download will replace "Japanese" with "Italian" as the 1st language.

WWW.SERVICE-MANUAL.NET

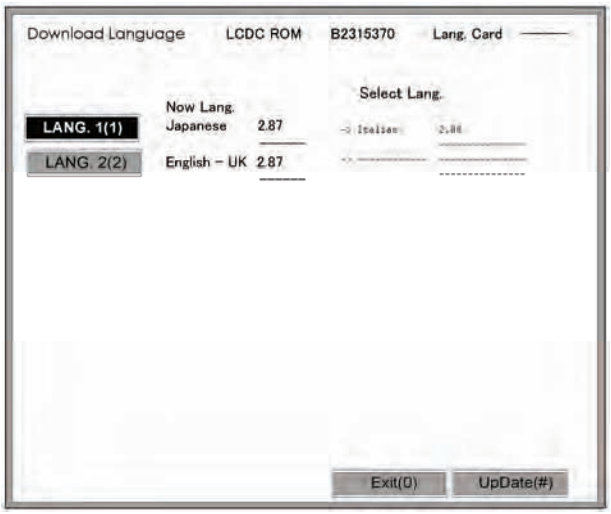

10. Touch "Update(#)" on the screen (or press #) to start the download.
    Another screen with a progress bar does not show when the language is downloading.
    The following occur at the time the language is downloading:
    - The operation panel switches off.
    - The LED on the power on key flashes rapidly.
11. After the message of installation completed has shown on the LCD, switch the copier main power switch off. Then remove the SD card from the slot.
12. Switch the copier main power switch on to resume normal operation.

System Maintenance

WWW.SERVICE-MANUAL.NET

5.13 REBOOT/SYSTEM SETTING RESET

5.13.1 SOFTWARE RESET

You can reboot the software with one of the following two procedures:

1. Turn the main power switch off and on.
2. Press and hold down and together for over 10 seconds. When the machine beeps once, release both buttons. After “Now loading. Please wait” shows for a few seconds, the copy window will open. The machine is ready for normal operation.

5.13.2 SYSTEM SETTINGS AND COPY SETTING RESET

System Setting Reset

The system settings in the UP mode can be reset to their defaults. Use the following procedure.

1. Press User Tools/Counter .
2. Hold down and then press System Settings.

Note

- You must press first.

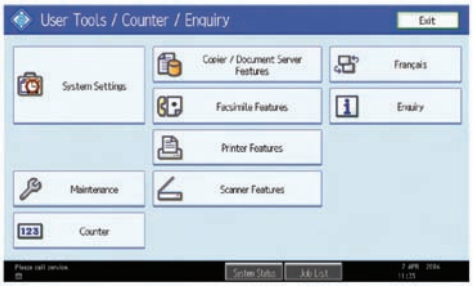

3. Press yes when the message prompts you to confirm that you want to reset the system settings.
4. Press exit when the message tells you that the settings have been reset.

Copier Setting Reset

Use the following procedure to reset the copy settings in the UP mode to their defaults.

1. Press User Tools/Counter .
2. Hold down and then press Copier/Document Server Settings.

Note

- You must press first.

WWW.SERVICE-MANUAL.NET

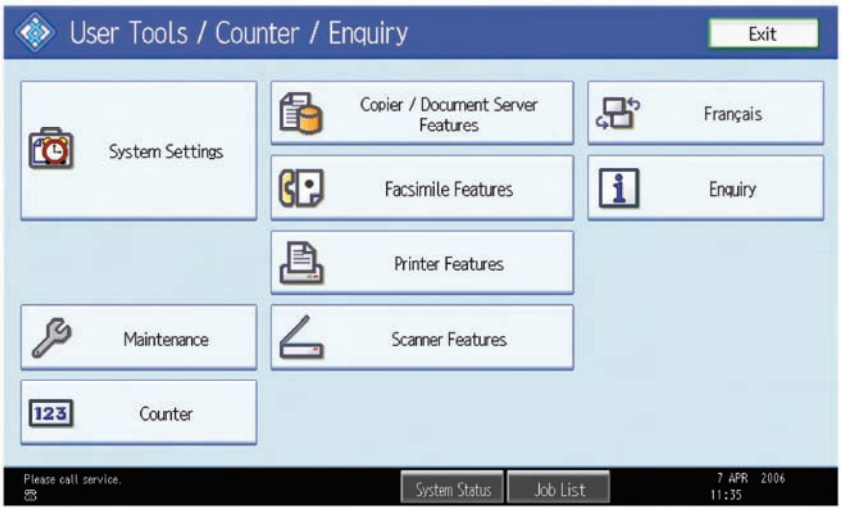

3. Press “Yes” when the message prompts you to confirm that you want to reset the Copier Document Server settings.
4. Press exit when the message tells you that the settings have been reset.

WWW.SERVICE-MANUAL.NET

5.14 DOWNLOADING STAMP DATA

The stamp data should be downloaded from the controller firmware to the hard disks at the following times:

- After the hard disks have been replaced.

The print data contains the controller software. Execute SP 5853 to download the fixed stamp data required by the hard disks.

1. Enter the SP mode.
2. Select SP5853 and then press "EXECUTE". The following screen opens while the stamp data is downloading.

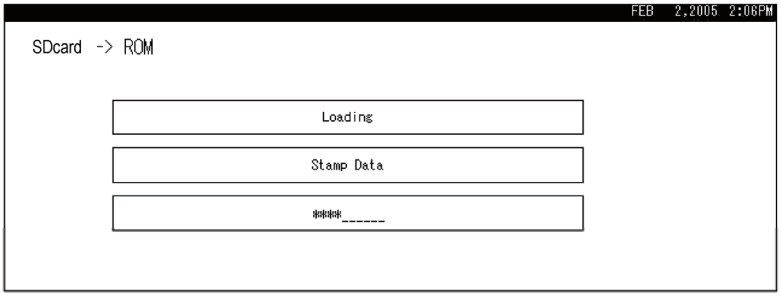

The download is finished when the message prompts you to close.

3. Press the "Exit" button. Then turn the copier off and on again.

WWW.SERVICE-MANUAL.NET

5.15 NVRAM DATA UPLOAD/DOWNLOAD

5.15.1 UPLOADING CONTENT OF NVRAM TO AN SD CARD

Do the following procedure to upload SP code settings from NVRAM to an SD card.

Note

- This data should always be uploaded to an SD card before the NVRAM is replaced.
- Make sure that the write protection of an SD card is unlocked

1. Do SP5990-001 (SMC Print) before you switch the machine off. You will need a record of the NVRAM settings if the upload fails.
2. Switch the copier main power switch off.
3. Remove the SD slot cover (x 1).
4. Insert the SD card into SD card slot 2. Then switch the copier on.
5. Execute SP5824-001 (NVRAM Data Upload) and then press the “Execute” key.
6. The following files are coped to an NVRAM folder on the SD card when the upload procedure is finished. The file is saved to the path and the following filename:

   NVRAM¥<serial number>.NV

   Here is an example with Serial Number “K5000017114”:

   NVRAM¥K5000017114.NV
7. In order to prevent an error during the download, be sure to mark the SD card that holds the uploaded data with the number of the machine from which the data was uploaded.

   Note

   - You can upload NVRAM data from more than one machine to the same SD card.

System Maintenance

WWW.SERVICE-MANUAL.NET

5.15.2 DOWNLOADING AN SD CARD TO NVRAM

Do the following procedure to download SP data from an SD card to the NVRAM in the machine.

- The NVRAM data down load may fail if the SD card with the NVRAM data is damaged, or if the connection between the controller and BICU is defective.
- Do the download procedure again if the download fails.
- Do the following procedure if the second attempt fails:
  Enter the NVRAM data manually using the SMC print you created before uploading the NVRAM data.

1. Switch the copier main power switch off.
2. Remove the SD slot cover (x 1).
3. Insert the SD card with the NVRAM data into SD Card Slot 2.
4. Switch the copier main power switch on.
5. Do SP5825-001 (NVRAM Data Download) and press the “Execute” key.

Note

- The serial number of the file on the SD card must match the serial number of the machine for the NVRAM data to download successfully. The download fails if the serial numbers do not match.

This procedure does not download the following data to the NVRAM:

- Total Count
- C/O, P/O Count

WWW.SERVICE-MANUAL.NET

5.16 ADDRESS BOOK UPLOAD/DOWNLOAD

5.16.1 INFORMATION LIST

The following information is possible to be uploaded and downloaded.

Information	
▪ Registration No. ▪ User Code ▪ E-mail ▪ Protection Code ▪ Fax Destination ▪ Fax Option ▪ Group Name ▪ Key Display	▪ Select Title ▪ Folder ▪ Local Authentication ▪ Folder Authentication ▪ Account ACL ▪ New Document Initial ACL ▪ LDAP Authentication

5.16.2 DOWNLOAD

1. Prepare a formatted SD card.
2. Make sure that the write-protection on the SD card is off.
3. Turn off the main power switch of the main machine.
4. Remove the SD slot cover at the left rear side of the machine (x 1).
5. Install the SD card into the SD card slot 2 (for service use).
6. Turn on the main power switch.
7. Enter the SP mode.
8. Do SP5-846-051 (Backup All Addr Book).
9. Exit the SP mode, and then turn off the main power switch.
10. Remove the SD card form the SD card slot 2.
11. Install the SD slot cover.

Note

- If the capacity of SD card is not enough to store the local user information, an error message is displayed.
- Carefully handle the SD card, which contains user information. Do not take it back to your location.

WWW.SERVICE-MANUAL.NET

5.16.3 UPLOAD

1. Turn off the main power switch of the main machine.
2. Remove the SD slot cover at the left rear side of the machine (x 1).
3. Install the SD card, which has already been uploaded, into the SD card slot 2.
4. Turn on the main power switch.
5. Enter the SP mode.
6. Do SP5-846-052 (Restore All Addr Book).
7. Exit the SP mode, and then turn off the main power switch.
8. Remove the SD card form the SD card slot 2.
9. Install the SD slot cover.

Note

- The counter in the user code information is initialized after uploading.
- The information of an administrator and supervisor cannot be downloaded nor uploaded.
- If there is no data of address book information in the SD card, an error message is displayed.

WWW.SERVICE-MANUAL.NET

5.17 USING THE DEBUG LOG

5.17.1 OVERVIEW

This machine provides a Save Debug Log feature that allows the Customer Engineer to save and retrieve error information for analysis.

Every time an error occurs, debug information is recorded in volatile memory. But this information is lost when the machine is switched off and on.

To capture this debug information, the Save Debug Log feature provides two main features:

- Switching on the debug feature so error information is saved directly to the HDD for later retrieval.
- Copying the error information from the HDD to an SD card.

Do the following procedure below to set up the machine so the error information is saved automatically to the HDD when a user has problems with the machine. Then ask the user to reproduce the problem.

5.17.2 SWITCHING ON AND SETTING UP SAVE DEBUG LOG

The debug information cannot be saved until the “Save Debug Log” function has been switched on and a target has been selected.

1. Enter the SP mode and switch the Save Debug Log feature on.
   - Enter the SP mode.
   - Touch “System SP”.
   - On the LCD panel, open SP5857.
2. Under “5857 Save Debug Log”, touch “1 On/Off”.

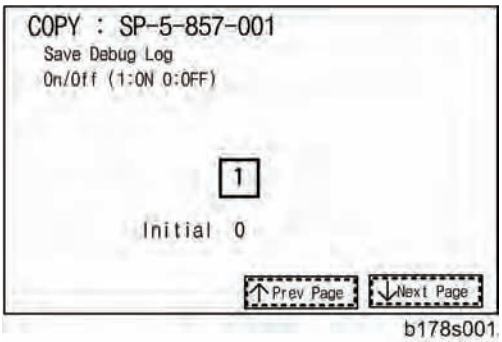

3. On the control panel keypad, press “1”. Then press #. This switches the Save Debug Log feature on.

System Maintenance

WWW.SERVICE-MANUAL.NET

Note

- The default setting is “0” (OFF). This feature must be switched on in order for the debug information to be saved.

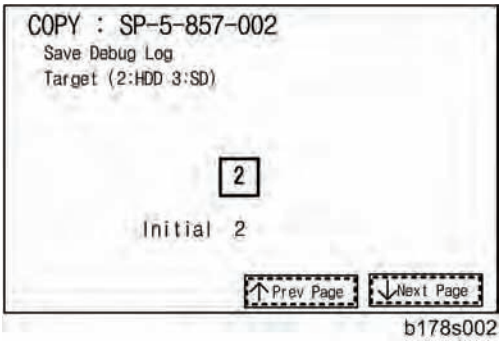

4. Select the target destination where the debug information will be saved. Under “5857 Save Debug Log”, touch “2 Target”, enter “2” with the operation panel key to select the hard disk as the target destination. Then press #.

Note

- Select “3 SD Card” to save the debug information directly to the SD card if it is inserted in the service slot.

5. Now touch “5858” and specify the events that you want to record in the debug log. SP5858 (Debug Save When) provides the following items for selection.

1	Engine SC Error	Saves data when an engine-related SC code is generated.
2	Controller SC Error	Saves debug data when a controller-related SC Code is generated.
3	Any SC Error	Saves data only for the SC code that you specify by entering code number.
4	Jam	Saves data for jams.

Note

- More than one event can be selected.

Example 1: To Select Items 1, 2, 4

Touch the appropriate items(s). Press “ON” for each selection. This example shows “Engine SC Error” selected.

WWW.SERVICE-MANUAL.NET

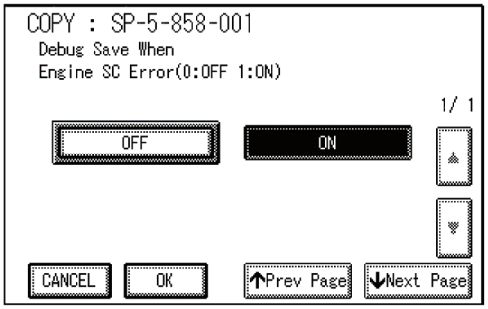

Example 2: To Specify an SC Code

Touch “3 Any SC Error”, enter the 3-digit SC code number with the control panel number keys. Then press #. This example shows an entry for SC670.

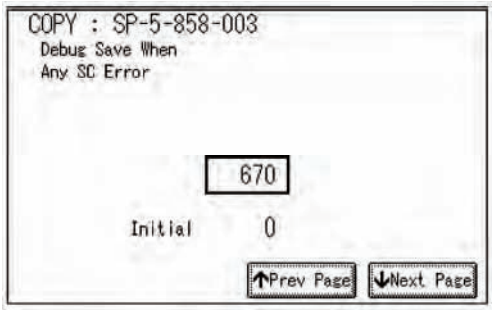

Note

- For details about SC code numbers, please refer to the SC tables in Section 4. “Troubleshooting”.

6. Select one or more memory modules for reading and recording debug information. Touch “5859”.

   Under “5859” press the necessary key item for the module that you want to record.

   Enter the appropriate 4-digit number. Then press #.

Note

- Refer to the two tables below for the 4-digit numbers to enter for each key.

The example below shows “Key 1” with “2222” entered.

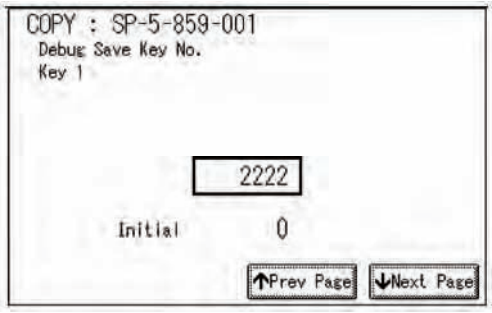

The following keys can be set with the corresponding numbers. (The initials in parentheses indicate the names of the modules.)

4-Digit Entries for Keys 1 to 10

WWW.SERVICE-MANUAL.NET

Key No.	Copy	Printer	Scanner	Web
1	2222 (SCS)			
2	14000 (SRM)			
3	256 (IMH)			
4	1000 (ECS)			
5	1025 (MCS)			
6	4848 (COPY)	4400 (GPS)	5375 (Scan)	5682 (NFA)
7	2224 (BICU)	4500 (PDL)	5682 (NFA)	6600 (WebDB)
8		4600 (GPS-PM)	3000 (UCS)	3300 (PTS)
9		2000 (NCS)	2000 (NCS)	6666 (WebSys)
10		2224 (BICU)	4126 (DCS)	2000 (NCS)

Note

- The default settings for Keys 1 to 10 are all zero (“0”).

Key to Acronyms

Acronym	Meaning	Acronym	Meaning
ECS	Engine Control Service	NFA	Net File Application
GPS	GW Print Service	PDL	Printer Design Language
GSP-PM	GW Print Service – Print Module	PTS	Print Server
IMH	Image Memory Handler	SCS	System Control Service
MCS	Memory Control Service	SRM	System Resource Management
NCS	Network Control Service	WebDB	Web Document Box (Document Server)

7. The machine is now set to record the debugging information automatically on the HDD

WWW.SERVICE-MANUAL.NET

(the target selected with SP5857-002) for the events that you selected with SP5858 and the memory modules selected with SP5859.

Please keep the following important points in mind when you do this setting:

- Note that the number entries for Keys 1 to 5 are the same for the Copy, Printer, Scanner, and Web memory modules.
- The initial settings are all zero.
- These settings remain in effect until you change them. Be sure to check all the settings, especially the settings for Keys 6 to 10. To switch off a key setting, enter a zero for that key.
- You can select any number of keys from 1 to 10 (or all) by entering the corresponding 4-digit numbers from the table.
- You cannot mix settings for the groups (COPY, PRINTER, etc.) for 006 to 010. For example, if you want to create a PRINTER debug log you must select the settings from the 9 available selections for the “PRINTER” column only.
- One area of the disk is reserved to store the debug log. The size of this area is limited to 4 MB.

5.17.3 RETRIEVING THE DEBUG LOG FROM THE HDD

Retrieve the debug log by copying it from the hard disk to an SD card.

1. Insert the SD card into slot 2 (service slot) of the copier.
2. Enter the SP mode and execute SP5857-009 (Copy HDD to SD Card (Latest 4 MB)) to write the debugging data to the SD card.
3. Use a card reader to copy the file and send it for analysis to your local Ricoh representative by email. You can also send the SD card by regular mail if you want.

5.17.4 RECORDING ERRORS MANUALLY

SC errors and jams only are recorded to the debug log automatically. Please instruct the user to do the following immediately after occurrence to save the debug data for any other errors that occur while the customer engineer is not on site. Such problems also include a controller or panel freeze.

Note

- You must previously switch on the Save Debug Feature (SP5857-001) and select the hard disk as the save destination (SP5857-002) if you want to use this feature.

1. Press (Clear Modes).on the operation panel when the error occurs.
2. On the control panel, enter “01”. Then hold down for at least 3 seconds until the machine beeps and then release it. This saves the debug log to the hard disk for later retrieval with an SD card by the service representatives.
3. Switch the machine off and on to resume operation.

System Maintenance

WWW.SERVICE-MANUAL.NET

The debug information for the error is saved on the hard disk. This lets the service representative retrieve it on their next visit by copying it from the HDD to an SD card.

5.17.5 DEBUG LOG CODES

SP5857-015 Copy SD Card-to-SD Card: Any Desired Key

This SP copies the log on an SD card (the file that contains the information written directly from shared memory) to a log specified by key number. The copy operation is executed in the log directory of the SD card inserted in the same slot. (This function does not copy from one slot to another.) Each SD card can hold up to 4 MB of file data. Unique file names are created for the data during the copy operation to prevent overwriting files of the same name. This means that log data from more than one machine can be copied onto the same SD card. This command does not execute if there is no log on the HDD for the name of the specified key.

SP5857-016 Create a File on HDD to Store a Log

This SP creates a 32 MB file to store a log on the HDD. However, this is not a completely empty file. The created file will hold the number “2225” as the SCS key number and other non-volatile information. Even if this SP is not executed, a file is created on the HDD when the first log is stored on the HDD (it takes some time to complete this operation). This creates the possibility that the machine may be switched off and on before the log can be created completely. If you execute this SP to create the log file beforehand, this will greatly reduce the amount of time required to acquire the log information and save onto the HDD. With the file already created on the HDD for the log file, the data only needs to be recorded. A new log file does not need to be created. To create a new log file, do SP5857-011 to delete the debug log data from the HDD. Then do SP5857-016.

SP5857-017 Create a File on SD Card to Store a Log

This SP creates a 4 MB file to store a log on an SD card. However, this is not a completely empty file. The created file will hold the number “2225” as the SCS key number and other non-volatile information. Even if this SP is not executed, a file is created on the SD card when the first log is stored on the SD card (it takes some time to complete this operation). This creates the possibility that the machine may be switched off and on before the log can be created completely. If you execute this SP to create the log file beforehand, this will greatly reduce the amount of time required to acquire the log information and save onto the SD card. With the file already created on the SD card for the log file, the data only needs to be recorded; a new log file does not require creation. To create a new log file, do SP5857-012 to delete the debug log data from the SD card. Then do SP5857-017.

WWW.SERVICE-MANUAL.NET

5.18 CARD SAVE FUNCTION

5.18.1 OVERVIEW

Card Save:

- The Card Save function is used to save print jobs received by the printer on an SD card with no print output. Card Save mode is toggled using printer Bit Switch #1 bit number 4. Card Save will remain enabled until the SD card becomes full, or until all file names have been used.
- Captures are stored on the SD card in the folder /prt/cardsave. File names are assigned sequentially from PRT00000.prn to PRT99999.prn. An additional file PRT.CTL will be created. This file contains a list of all files created on the card by the card save function.
- Previously stored files on the SD card can be overwritten or left intact. Card Save SD has “Add” and “New” menu items.
  - **Card Save (Add):** Appends files to the SD Card. Does not overwrite existing files. If the card becomes full or if all file names are used, an error will be displayed on the operation panel. Subsequent jobs will not be stored.
  - **Card Save (New):** Overwrites files in the card's /prt/cardsave directory.

Limitation:

- Card Save cannot be used with PJL Status Readback commands. PJL Status Readbacks will not work. In addition they will cause the Card Save to fail.

5.18.2 PROCEDURE

1. Turn the main power switch OFF.
2. Insert the SD card into slot 2. Then turn the power ON.
3. Enter SP mode.
4. Select the “Printer Sp”.
5. Select SP-1001 "Bit Switch”.

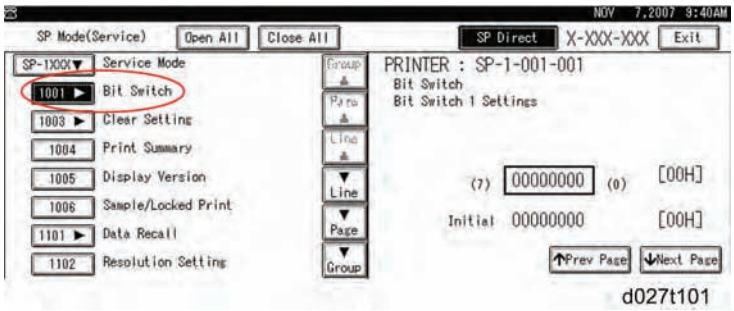

6. Select “Bit Switch 1 Settings” and use the numeric keypad to turn bit 4 ON and then press the “#” button to register the change. The result should look like: **00010000**. By

System Maintenance

WWW.SERVICE-MANUAL.NET

doing this, Card Save option will appear in the “List/Test Print” menu.

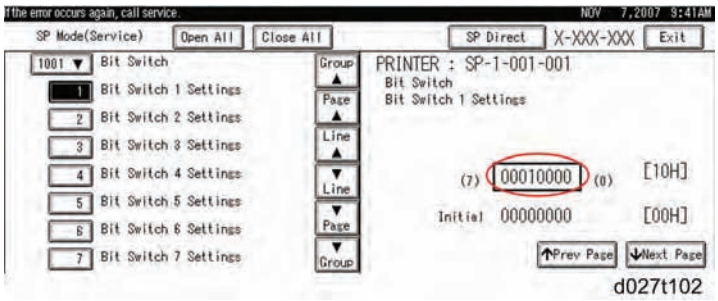

d027t102

7. Press “Exit” to exit SP Mode.
8. Press the “User Tools/Counter” button.

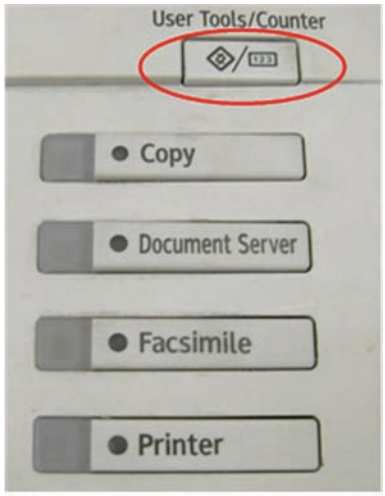

d027t103

9. Select “Printer Features”.

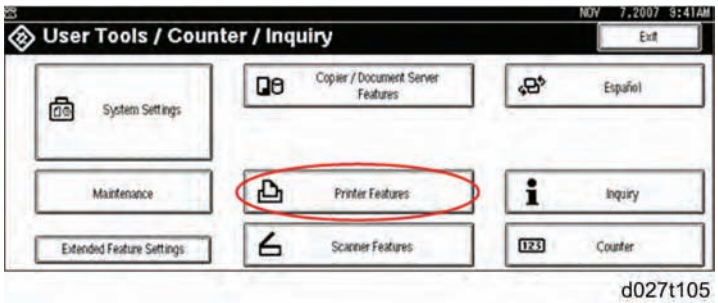

d027t105

10. Card Save (Add) and Card Save (New) should be displayed on the screen. Select Card Save (Add) or Card Save (New).

WWW.SERVICE-MANUAL.NET

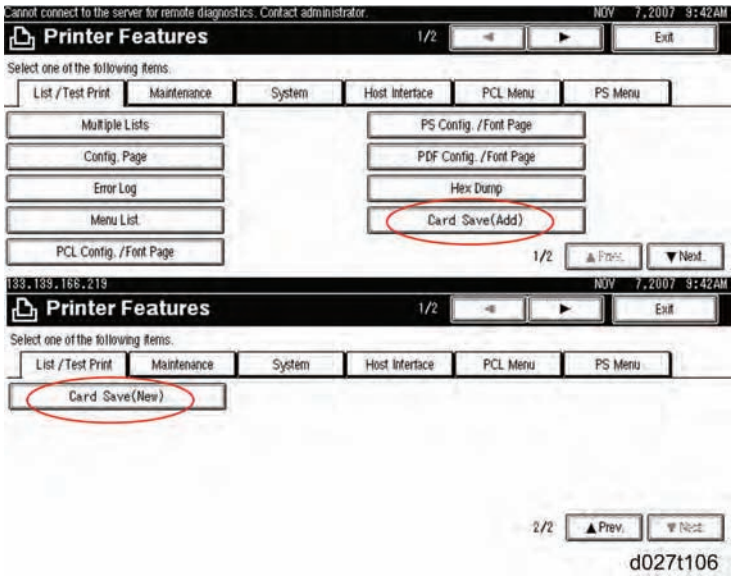

d027t106

11. Press “OK” and then exit the “User Tools/Counter” menu.

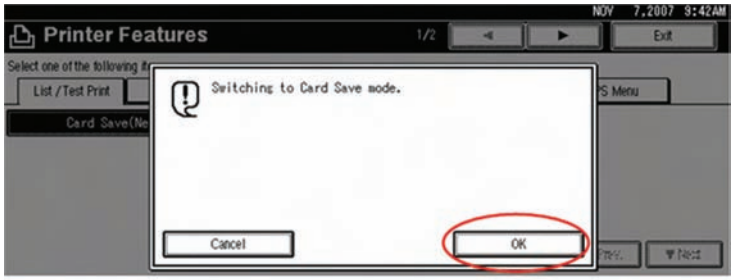

d027t107

12. Press the “Printer” button.

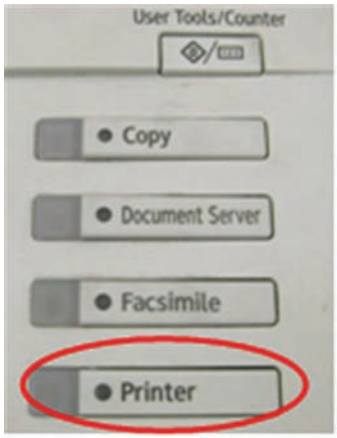

d027t108

13. Card Save should be displayed in the top left of the display panel.

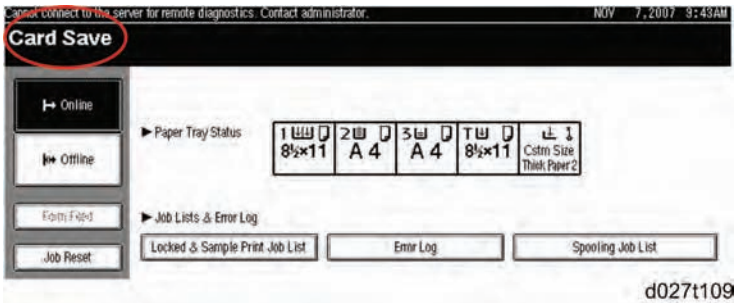

d027t109

WWW.SERVICE-MANUAL.NET

14. Send a job to the printer. The Communicating light should start blinking as shown below.

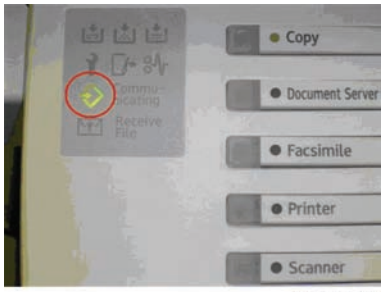

d027t110

15. As soon as the printer receives the data, it will be stored on the SD card automatically with no print output. Nothing is displayed on the screen, indicating that a Card Save operation was successful.
16. Press “Offline” and then the “Clear/Stop” button to exit Card Save mode.

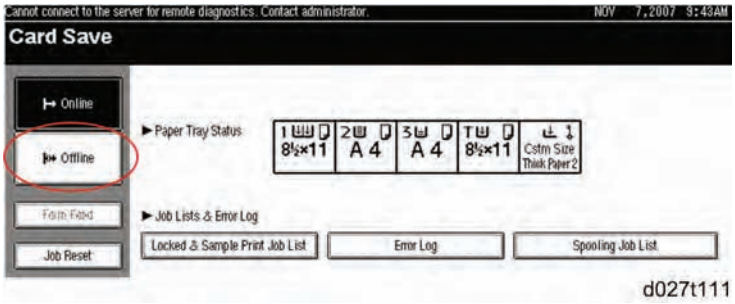

d027t111

17. Change the Bit Switch Settings back to the default **00000000**. Press the “#” button in the numeric keypad to register the changes.
18. Remove the SD card after the main power switch is turned off.

5.18.3 ERROR MESSAGES

Card Save error messages:

- **Init error:** A card save process (e.g. card detection, change to kernel mode) failed to initialize.
- **Card not found:** Card cannot be detected in the slot.
- **No memory:** Insufficient working memory to process the job.
- **Write error:** Failed to write to the card.
- **Other error:** An unknown error occurred.

If an error occurs, pressing “OK” will cause the device to discard the job and return to the ready state.

WWW.SERVICE-MANUAL.NET

TROUBLESHOOTING

REVISION HISTORY		
Page	**Date**	**Added/Updated/New**
82	03/14/2011	Added SC899 Software Error

WWW.SERVICE-MANUAL.NET

WWW.SERVICE-MANUAL.NET

6. TROUBLESHOOTING

6.1 SERVICE CALL

6.1.1 SERVICE CALL CONDITIONS

The "SC Table" section shows the SC codes for controller errors and other errors. The latter (not controller errors) are put into four types. The type is determined by their reset procedures. The table shows the classification of the SC codes.

	Key	Definition	Reset Procedure
Controller errors	CTL	The error has occurred in the controller.	See "Troubleshooting Procedure" in the table.
Other errors	A	The error involves the fusing unit. The machine operation is disabled. The user cannot reset the error.	Turn the main switch off and on. Reset the SC (set SP5-810-1). Turn the main switch off and on.
	B	The error involves one or some specific units. The machine operates as usual, excluding the related units.	Turn the operation switch off and on.
	C	The error is logged. The SC-code history is updated. The machine operates as usual.	The SC will not show. Only the SC history is updated.
	D	The machine operation is disabled. You can reset the machine by turning the operation switch or main switch off and on. If the error occurs again, the same SC code is displayed.	Turn the operation switch or main power switch off and on.

After you turn the main power switch off, wait for one second or more before you turn the

WWW.SERVICE-MANUAL.NET

main power switch on (☛ SC 672). All SCs are logged. The print log data (SP5-990-004) in SP mode can check the latest 10 SC codes detected and total counters when the SC code is detected.

Note

- If the problem concerns electrical circuit boards, first disconnect then reconnect the connectors before you replace the PCBs.
- If the problem concerns a motor lock, first check the mechanical load before you replace motors or sensors.

SC Code Classification

The table shows the classification of the SC codes:

Class 1	Section	SC Code	Detailed section
1XX	Scanning	100 -	Scanner
		190 -	Unique for a specific model
2XX	Laser exposure	200 -	Polygon motor
		220 -	Synchronization control
		230 -	FGATE signal related
		240 -	LD control
		280 -	Unique for a specific model
		290 -	Shutter
3XX	Image development 1	300 -	Charge
		330 -	Drum potential
		350 -	Development
		380 -	Unique for a specific model
4XX	Image development 2	400 -	Image transfer
		420 -	Paper separation
		430 -	Cleaning
		440 -	Around drum

WWW.SERVICE-MANUAL.NET

Class 1	Section	SC Code	Detailed section
		460 -	Unit
		480 -	Others
5XX	Paper feed / Fusing	500 -	Paper feed
		515 -	Duplex
		520 -	Paper transport
5XX	Paper feed / Fusing	530 -	Fan motor
		540 -	Fusing
		560 -	Others
		570 -	Unique for a specific model
6XX	Communication	600 -	Electrical counters
		620 -	Mechanical counters
		630 -	Account control
		640 -	CSS
		650 -	Network
		670 -	Internal data processing
		680 -	Unique for a specific model
7XX	Peripherals	700 -	Original handling
		720 -	Two-tray finisher
		740 -	Booklet finisher
8XX	Controller	800 -	Error after ready condition
		820 -	Diagnostics error
		860 -	Hard disk
		880 -	Unique for a specific model
9XX	Others	900 -	Counter

WWW.SERVICE-MANUAL.NET

Class 1	Section	SC Code	Detailed section
		920 -	Memory
		990 -	Others

6.1.2 SERVICE CALL TABLES - 1

SC1xxx: Scanning

No.	Type	Details (Symptom, Possible Cause, Troubleshooting Procedures)
101	D	Exposure lamp error
		The peak white level is less than 64/255 digits (8 bits) when scanning the shading plate.
		▪ Exposure lamp defective ▪ Lamp stabilizer defective ▪ Exposure lamp connector defective ▪ Standard white plate dirty ▪ Scanner mirror or scanner lens out of position or dirty
		1. Check and clean the scanner mirror(s) and scanner lens. 2. Check and clean the shading plate. 3. Replace the exposure lamp. 4. Replace the lamp stabilizer. 5. Replace the scanner mirror(s) or scanner lens.

No.	Type	Details (Symptom, Possible Cause, Troubleshooting Procedures)
120	D	Scanner home position error 1
		The scanner home position sensor does not detect the "OFF" condition during operation.
		▪ Scanner motor driver defective ▪ Scanner motor defective ▪ Harness between SIO board and scanner motor disconnected ▪ Scanner HP sensor defective

WWW.SERVICE-MANUAL.NET

No.	Type	Details (Symptom, Possible Cause, Troubleshooting Procedures)
		▪ Harness between SIO and HP sensor disconnected
		1. Check the cable connection between the SIO board and scanner motor. 2. Check the cable connection between the SIO and HP sensor. 3. Replace the scanner motor. 4. Replace the HP sensor.

No.	Type	Details (Symptom, Possible Cause, Troubleshooting Procedures)
121	D	Scanner home position error 2
		The scanner home position sensor does not detect the "ON" condition during operation.
		▪ Scanner motor driver defective ▪ Scanner motor defective ▪ Harness between SIO board and scanner motor disconnected ▪ Scanner HP sensor defective ▪ Harness between SIO and HP sensor disconnected
		1. Check the cable connection between the SIO board and scanner motor. 2. Check the cable connection between the SIO and HP sensor. 3. Replace the scanner motor. 4. Replace the HP sensor.

No.	Type	Details (Symptom, Possible Cause, Troubleshooting Procedures)
141	D	Black level detection error
		The black level cannot be adjusted within the target value during the zero clamp.
		▪ Harness disconnected ▪ Defective SBU
		1. Check the cable connection 2. Replace the SBU.

WWW.SERVICE-MANUAL.NET

No.	Type	Details (Symptom, Possible Cause, Troubleshooting Procedures)
142	D	White level detection error
		The white level cannot be adjusted within the target during auto gain control.
		▪ Dirty exposure glass or optics section ▪ SBU board defective ▪ Exposure lamp defective ▪ Lamp stabilizer defective ▪ Scanner motor defective
		1. Clean the exposure glass, white plate, mirrors, and lens. 2. Check if the exposure lamp is lit during initialization. 3. Check the harness connection between SBU and BICU. 4. Replace the exposure lamp. 5. Replace the scanner motor. 6. Replace the SBU board.

No.	Type	Details (Symptom, Possible Cause, Troubleshooting Procedures)
144	D	SBU communication error
		The SBU connection cannot be detected at power on or recovery from the energy save mode.
		▪ Defective SBU ▪ Defective harness ▪ Defective detection port on the BICU
		1. Replace the harness. 2. Replace the SBU. 3. Replace the BICU.

WWW.SERVICE-MANUAL.NET

No.	Type	Details (Symptom, Possible Cause, Troubleshooting Procedures)
161		IPU error
001	D	The error result of self-diagnostic by the ASIC on the BICU is detected.
		▪ Defective BICU ▪ Defective connection between BICU and SBU
		1. Check the connection between BICU and SBU. 2. Replace the BICU.
002	D	The machine detects an error during an access to the Ri.
		▪ Defective BICU board
		Replace the BICU board.
003	D	The ASIC on the BICU fails to configure or initialize the DRAM.
		▪ Defective BICU board
		Replace the BICU board.

No.	Type	Details (Symptom, Possible Cause, Troubleshooting Procedures)
165	D	Copy Data Security Unit error
		▪ The copy data security board is not detected when the copy data security function is set "ON" with the initial setting. ▪ A device check error occurs when the copy data security function is set "ON" with the initial setting.
		▪ Incorrect installation of the copy data security board ▪ Defective copy data security board
		1. Reinstall the copy data security board. 2. Replace the copy data security board.

WWW.SERVICE-MANUAL.NET

No.	Type	Details (Symptom, Possible Cause, Troubleshooting Procedures)
185	D	CIS communication error
		Error occurs during ASIC register's automatic initialization on the CIS, or during transmission between the CIS – DF.
		▪ Harness between the CIS – DF is disconnected ▪ CIS defective
		1. Check or replace the harness (CN220 or CN210 on the DF main board) between the CIS and DF. 2. Replace the CIS on the DF.

No.	Type	Details (Symptom, Possible Cause, Troubleshooting Procedures)
186	D	CIS LED error
		LED on the CIS causes an error.
		▪ During initializing, the ratio of the average between leading-edge area and rear-edge is out of range. ▪ During scanning, the shading data peak is under the standard value. ▪ Harness CN210 and CN220 on the DF are disconnected.
		1. Check or replace the harness (CN220 or CN210 on the DF main board) between the CIS and DF. 2. Replace the CIS on the DF.

WWW.SERVICE-MANUAL.NET

No.	Type	Details (Symptom, Possible Cause, Troubleshooting Procedures)
187	D	CIS black level error
		The black level scanned by CIS is abnormal. The black level average of R, G or B is not within range (2 to 62). 0 < Calibrated Black data level < 255 (10bit).
		▪ Defective CIS
		1. Check or replace the harness (CN220 or CN210 on the DF main board) between the CIS and DF. 2. Replace the CIS on the DF.

No.	Type	Details (Symptom, Possible Cause, Troubleshooting Procedures)
188	D	CIS white level error
		The shading data peak detected from the CIS is abnormal.
		▪ Defective CIS
		1. Check or replace the harness (CN220 or CN210 on the DF main board) between the CIS and DF. 2. Replace the CIS on the DF.

No.	Type	Details (Symptom, Possible Cause, Troubleshooting Procedures)
189	D	CIS gray balance adjustment error
		The adjustment error occurs during the test after adjusting the gray balance.
		▪ Defective CIS
		1. Retry the gray balance adjustment. 2. If the machine does not recover, do the following steps. ▪ Turn off the machine. ▪ Make sure CN210 and CN220 are connected firmly. ▪ Turn on the machine. 3. If the machine does not recover, replace the CIS.

WWW.SERVICE-MANUAL.NET

No.	Type	Details (Symptom, Possible Cause, Troubleshooting Procedures)
195	D	Serial Number Mismatch
		▪ Serial number stored in the memory does not have the correct code.
		▪ NVRAM defective ▪ BICU replaced without original NVRAM
		1. Check the serial number with SP5-811-002. 2. If the stored serial number is incorrect, contact your supervisor.

WWW.SERVICE-MANUAL.NET

6.1.3 SERVICE CALL TABLES - 2

SC Codes Group 2: Exposure

No.	Type	Details (Symptom, Possible Cause, Troubleshooting Procedures)
202	D	Polygon motor error 1: ON timeout
		The polygon mirror motor does not reach the targeted operating speed within the specified time after turning on or changing speed
		▪ Defective or disconnected harness to polygon motor driver board ▪ Defective polygon motor driver board ▪ Defective polygon motor.
		1. Replace the polygon motor. 2. Replace the laser optics housing unit. 3. Replace the harness. 4. Replace the BICU.

No.	Type	Details (Symptom, Possible Cause, Troubleshooting Procedures)
203	D	Polygon motor error 2: OFF timeout
		The polygon mirror motor does leave the READY status within 3 seconds after the polygon motor switches off.
		▪ Disconnected or defective harness to polygon motor driver board ▪ Defective polygon motor driver board ▪ Defective polygon motor
		1. Check or replace the harness. 2. Replace the polygon motor.

WWW.SERVICE-MANUAL.NET

No.	Type	Details (Symptom, Possible Cause, Troubleshooting Procedures)
204	D	Polygon motor error 3: XSCRDY signal error
		The SCRDY_N signal goes HIGH (inactive) while the laser diode is firing.
		▪ Disconnected or defective harness to polygon motor driver board ▪ Defective polygon motor ▪ Defective polygon motor driver board
		1. Check or replace the harness. 2. Replace the polygon motor.

No.	Type	Details (Symptom, Possible Cause, Troubleshooting Procedures)
210	C	Laser synchronizing detection error: end position [K]
211	C	Laser synchronizing detection error: end position [Y]
212	C	Laser synchronizing detection error: end position [M]
213	C	Laser synchronizing detection error: end position [C]
-	-	The laser synchronizing detection signal for the end position of LDB [K], [Y], [M], [C] is not detected for one second after the LDB unit turned on when detecting the main scan magnification.
		▪ Disconnected or defective harness to synchronizing detector for end position ▪ Defective synchronizing detector board ▪ Defective LD board or driver ▪ Defective BICU
		1. Replace the harness of the LD board. 2. Replace the laser optics housing unit. 3. Replace the BICU.

WWW.SERVICE-MANUAL.NET

No.	Type	Details (Symptom, Possible Cause, Troubleshooting Procedures)
220	D	Laser synchronizing detection error: start position [K]: LD0
221	D	Laser synchronizing detection error: start position [K]: LD1
222	D	Laser synchronizing detection error: start position [Y]: LD0
223	D	Laser synchronizing detection error: start position [Y]: LD1
224	D	Laser synchronizing detection error: start position [M]: LD0
225	D	Laser synchronizing detection error: start position [M]: LD1
226	D	Laser synchronizing detection error: start position [C]: LD0
227	D	Laser synchronizing detection error: start position [C]: LD1
-	-	The laser synchronizing detection signal for the start position of the LDB [K], [Y], [M], [C] is not output for two seconds after LDB unit turns on while the polygon motor is rotating normally.
		▪ Disconnected cable from the laser synchronizing detection unit or defective connection ▪ Defective laser synchronizing detector ▪ Defective LDB ▪ Defective BICU
		1. Check the connectors. 2. Replace the laser-synchronizing detector. 3. Replace the LDB. 4. Replace the BICU.

WWW.SERVICE-MANUAL.NET

No.	Type	Details (Symptom, Possible Cause, Troubleshooting Procedures)
230	D	FGATE ON error: K
		The PFGATE ON signal does not assert within 5 seconds after processing the image in normal job or MUSIC for start position [K].
		▪ Defective ASIC (Lupus) ▪ Poor connection between controller and BICU. ▪ Defective BICU
		1. Check the connection between the controller board and the BICU. 2. Replace the BICU. 3. Replace the controller board.

No.	Type	Details (Symptom, Possible Cause, Troubleshooting Procedures)
231	D	FGATE OFF error: K
		▪ The PFGATE ON signal still asserts within 5 seconds after processing the image in normal job or MUSIC for end position [K]. ▪ The PFGATE ON signal still asserts when the next job starts.
		See SC 230 for troubleshooting details.

No.	Type	Details (Symptom, Possible Cause, Troubleshooting Procedures)
232	D	FGATE ON error: Y
		The PFGATE ON signal does not assert within 5 seconds after processing the image in normal job or MUSIC for start position [Y].
		See SC 230 for troubleshooting details.

WWW.SERVICE-MANUAL.NET

No.	Type	Details (Symptom, Possible Cause, Troubleshooting Procedures)
233	D	FGATE OFF error: Y
		▪ The PFGATE ON signal still asserts within 5 seconds after processing the image in normal job or MUSIC for end position [Y]. ▪ The PFGATE ON signal still asserts when the next job starts.
		See SC 230 for troubleshooting details.

No.	Type	Details (Symptom, Possible Cause, Troubleshooting Procedures)
234	D	FGATE ON error: M
		The PFGATE ON signal does not assert within 5 seconds after processing the image in normal job or MUSIC for start position [M].
		See SC 230 for troubleshooting details.

No.	Type	Details (Symptom, Possible Cause, Troubleshooting Procedures)
235	D	FGATE OFF error: M
		▪ The PFGATE ON signal still asserts within 5 seconds after processing the image in normal job or MUSIC for end position [M]. ▪ The PFGATE ON signal still asserts when the next job starts.
		See SC 230 for troubleshooting details.

No.	Type	Details (Symptom, Possible Cause, Troubleshooting Procedures)
236	D	FGATE ON error: C
		The PFGATE ON signal does not assert within 5 seconds after processing the image in normal job or MUSIC for start position [C].
		See SC 230 for troubleshooting details.

WWW.SERVICE-MANUAL.NET

No.	Type	Details (Symptom, Possible Cause, Troubleshooting Procedures)
237	D	FGATE OFF error: C
		▪ The PFGATE ON signal still asserts within 5 seconds after processing the image in normal job or MUSIC for end position [C]. ▪ The PFGATE ON signal still asserts when the next job starts.
		See SC 230 for troubleshooting details.

No.	Type	Details (Symptom, Possible Cause, Troubleshooting Procedures)
240	C	LD error: K
241	C	LD error: Y
242	C	LD error: M
243	C	LD error: C
-	-	The BICU detects LDB error a few times consecutively when LDB unit turns on after LDB initialization.
		▪ Worn-out LD ▪ Disconnected or broken harness of the LD
		1. Replace the harness of the LD. 2. Replace the laser optics housing unit. 3. Replace the BICU.

No.	Type	Details (Symptom, Possible Cause, Troubleshooting Procedures)
285	D	Line position adjustment (MUSIC) error
		Line position adjustment fails four consecutive times.
		▪ Pattern sampling error (insufficient image density) ▪ Defective ID sensors for the line position adjustment ▪ Defective image transfer belt unit ▪ Defective PCDU(s) ▪ Defective laser optics housing unit

WWW.SERVICE-MANUAL.NET

No.	Type	Details (Symptom, Possible Cause, Troubleshooting Procedures)
		1. Check and reinstall the image transfer belt unit and PCDUs. 2. Check if each toner bottle has enough toner. 3. Replace the ID sensor. 4. Replace the image transfer belt unit. 5. Replace the PCDU(s). 6. Replace the laser optics housing unit.

WWW.SERVICE-MANUAL.NET

6.1.4 SERVICE CALL TABLES - 3

SC3xx: Image Processing – 1

No.	Type	Details (Symptom, Possible Cause, Troubleshooting Procedures)
312	D	Charge P.P. output error [K]
313	D	Charge P.P. output error [M]
314	D	Charge P.P. output error [C]
315	D	Charge P.P. output error [Y]
-	-	The feedback voltage of the charge AC for each color is 0.3 V or less for 0.2 seconds after the charge AC has been turned on.
		▪ Disconnected or broken harnesses of the HVPS ▪ Defective PCDU ▪ Defective HVPS
		1. Check or replace the harnesses of the HVPS. 2. Reinstall or replace the PCDU. 3. Replace the HVPS.

WWW.SERVICE-MANUAL.NET

SC3xx: Image Processing – 2

No.	Type	Details (Symptom, Possible Cause, Troubleshooting Procedures)
360	D	TD sensor (Vt high) error 1: K
361	D	TD sensor (Vt high) error 1: M
362	D	TD sensor (Vt high) error 1: C
363	D	TD sensor (Vt high) error 1: Y
-	-	▪ The Vt value of the black, magenta, cyan, or yellow TD sensor exceeds the specified value (default: 4.7V) with SP3020-002 for twenty counts. ▪ The [Vt - Vtref] value of the black, magenta, cyan, or yellow TD sensor exceeds the specified value (default: 5.0V) with SP3020-001.
		▪ Black, magenta, cyan, or yellow TD sensor disconnected ▪ Harness between TD sensor and PCDU defective ▪ Defective TD sensor.
		1. Check the black, magenta, cyan, or yellow TD sensor connector and harness between the TD sensor and PCDU for damage. 2. Check the drawer connector. 3. Replace the defective PCDU.

WWW.SERVICE-MANUAL.NET

No.	Type	Details (Symptom, Possible Cause, Troubleshooting Procedures)
364	D	TD sensor (Vt low) error 2: K
365	D	TD sensor (Vt low) error 2: M
366	D	TD sensor (Vt low) error 2: C
367	D	TD sensor (Vt low) error 2: Y
-	-	The Vt value of the black, magenta, cyan, or yellow TD sensor is below the specified value with SP3020-004 (default: 0.5V) for 10 counts.
		▪ TD sensor harness disconnected, loose, defective ▪ A drawer connector disconnected, loose, defective ▪ TD sensor defective
		1. Check the black, magenta, cyan, or yellow TD sensor connector and harness between the TD sensor and PCDU for damage. 2. Check the drawer connector. 3. Replace the defective PCDU.

No.	Type	Details (Symptom, Possible Cause, Troubleshooting Procedures)
372	D	TD sensor adjustment error: K
373	D	TD sensor adjustment error: M
374	D	TD sensor adjustment error: C
375	D	TD sensor adjustment error: Y
-	-	During TD sensor initialization, the output value of the black, magenta, cyan, or yellow TD sensor is not within the range of the specified value with SP3238-001 to -004 (default: 2.5V) ± 0.2V
		▪ Heat seal not removed from a new developer pack ▪ TD harness sensor disconnected, loose or defective ▪ TD sensor defective ▪ Harness between TD sensor and drawer disconnected, defective
		1. Remove the heat seal from each PCDU. 2. Replace the defective PCDU.

WWW.SERVICE-MANUAL.NET

No.	Type	Details (Symptom, Possible Cause, Troubleshooting Procedures)
380	C	Drum gear position sensor error: K
381	C	Drum gear position sensor error: M
382	C	Drum gear position sensor error: C
383	C	Drum gear position sensor error: Y
		The machine does not detect the drum position signal for 3 seconds at the drum phase adjustment.
		▪ Dirty or defective drum gear position sensor
		1. Clean the drum gear position sensor. 2. Check the harness connection. 3. Replace the drum gear position sensor. 4. Replace the PCDU.

No.	Type	Details (Symptom, Possible Cause, Troubleshooting Procedures)
396	D	Drum/Development motor error: K
397	D	Drum/Development motor error: M
398	D	Drum/Development motor error: C
399	D	Drum/Development motor error: Y
-	-	The machine detects a High signal from the drum/development motor for 2 seconds after the drum/development motor turned on.
		▪ Overload on the drum/development motor ▪ Defective drum/development motor ▪ Defective harness ▪ Shorted 24 V fuse on the PSU ▪ Defective interlock system
		1. Check or replace the harness. 2. Replace the drum/development motor. 3. Replace the 24V fuse on the PSU.

WWW.SERVICE-MANUAL.NET

6.1.5 SERVICE CALL TABLES - 4

SC4xx: Image Processing - 3

No.	Type	Details (Symptom, Possible Cause, Troubleshooting Procedures)
400	D	ID sensor adjustment error
		When the Vsg error counter reaches "3", the machine detects "SC400". The Vsg error counter counts "1" when the Vsg detected by ID sensor is more than the value (default: 4.5V) specified with SP3324-005 or less than the value (default: 3.5V) specified with SP3324-006.
		▪ Dirty or defective ID sensor ▪ Defective ID sensor shutter
		1. Check the harness of the ID sensor. 2. Clean or replace the ID sensor. Note ▪ After replacing the ID sensor, input the ID sensor correction coefficient with SP3362-013 to -018. For details, refer to "ID sensor board" in the Replacement and Adjustment section. 3. Replace the IOB. 4. Replace the image transfer belt unit.

No.	Type	Details (Symptom, Possible Cause, Troubleshooting Procedures)
441	D	Image transfer unit motor error
		The motor LOCK signal is not detected for more than two seconds while the motor START signal is on.
		▪ Motor overload ▪ Defective image transfer unit motor
		1. Replace the image transfer belt unit. 2. Replace the IOB.

WWW.SERVICE-MANUAL.NET

No.	Type	Details (Symptom, Possible Cause, Troubleshooting Procedures)
442	D	Image transfer belt contact motor error
		The image transfer belt contact sensor does not detect the movement of actuator at the sensor while the polygon motor rotates.
		▪ Dirty image transfer belt contact sensor ▪ Defective image transfer belt contact motor ▪ Disconnected connector of image transfer belt contact sensor or motor ▪ Disconnected cable
		1. Replace the image transfer belt contact sensor. 2. Replace the image transfer belt contact motor.

No.	Type	Details (Symptom, Possible Cause, Troubleshooting Procedures)
443	C	Image transfer unit error
		The machine detects the encoder sensor error.
		▪ Defective encoder sensor ▪ Image transfer unit installation error ▪ Defective image transfer unit motor
		1. Check if the image transfer unit is correctly set. 2. Replace the image transfer unit motor. 3. Replace the image transfer unit.

WWW.SERVICE-MANUAL.NET

No.	Type	Details (Symptom, Possible Cause, Troubleshooting Procedures)
452	D	Paper transfer unit contact error
		The paper transfer unit contact sensor does not detect the movement of actuator at the sensor while the polygon motor rotates.
		▪ Defective paper transfer unit contact sensor ▪ Defective paper transfer unit contact motor ▪ Broken +24V fuse on PSU ▪ Defective IOB
		1. Check the connection between the paper transfer unit and PSU. 2. Replace the paper transfer unit contact sensor. 3. Replace the paper transfer unit contact motor. 4. Replace the +24V fuse on the PSU. 5. Replace the IOB.

No.	Type	Details (Symptom, Possible Cause, Troubleshooting Procedures)
460	D	Separation power pack output error
		An interrupt checks the status of the power pack every 20 ms. This SC is issued if the BICU detects a short in the power pack 10 times at D(ac).
		▪ Damaged insulation on the high-voltage supply cable ▪ Damaged insulation around the high-voltage power supply.
		1. Replace the high-voltage supply cable. 2. Replace the high-voltage power supply unit. 3. Replace the IOB.

WWW.SERVICE-MANUAL.NET

No.	Type	Details (Symptom, Possible Cause, Troubleshooting Procedures)
490	D	Toner transport motor error
		The LOCK signal is not detected for 2 seconds when the transport motor turns on.
		▪ Toner transport motor overload ▪ Disconnected or broken harness ▪ Defective toner transport motor ▪ Opened +24V fuse on the PSU ▪ Defective interlock switch
		1. Check or replace the harness. 2. Replace the toner transport motor. 3. Replace the +24V fuse on the PSU. 4. Replace the interlock switch.

No.	Type	Details (Symptom, Possible Cause, Troubleshooting Procedures)
491	D	High voltage power: Drum/ development bias output error
		An error signal is detected for 0.2 seconds when charging the drum or development.
		▪ High voltage leak ▪ Broken harness ▪ Defective drum unit or development unit ▪ Defective high voltage supply unit
		1. Check or replace the harness. 2. Replace the drum unit or paper transfer unit. 3. Replace the high voltage supply unit.

WWW.SERVICE-MANUAL.NET

No.	Type	Details (Symptom, Possible Cause, Troubleshooting Procedures)
492	C	High voltage power: Image transfer/ paper transfer bias output error
		An error signal is detected for 0.2 seconds when charging the separation, image transfer bet or paper transfer roller.
		▪ High voltage leak ▪ Broken harness ▪ Defective image transfer belt unit or paper transfer unit ▪ Defective high voltage supply unit
		1. Check or replace the harness. 2. Replace the image transfer belt unit or paper transfer unit. 3. Replace the high voltage supply unit.

No.	Type	Details (Symptom, Possible Cause, Troubleshooting Procedures)
498	C	Temperature and humidity sensor error 2
		▪ The thermistor output of the temperature sensor was not within the prescribed range (0.2V to 3.5V). ▪ The thermistor output of the humidity sensor was not within the prescribed range (0.01V to 2.4V).
		▪ Temperature and humidity sensor harness disconnected, loose, defective ▪ Temperature and humidity sensor defective
		1. Check the connector and harness. 2. Replace the temperature/humidity sensor.

WWW.SERVICE-MANUAL.NET

6.1.6 SERVICE CALL TABLES – 5

SC5xx: Paper Feed and Fusing

No.	Type	Details (Symptom, Possible Cause, Troubleshooting Procedures)
501	B	Paper Tray 1 error
502	B	Paper Tray 2 error
-	-	▪ When the tray lift motor rotates counterclockwise, (if the upper limit is not detected within 10 seconds), the machine asks the user to reset the tray. ▪ When the tray lift motor rotates clockwise, (if the upper limit is not detected within 1.5 seconds), the machine asks the user to reset the tray. If one of these conditions occurs three consecutive times, the SC is generated.
		▪ Disconnected or defective paper lift sensor ▪ Disconnected or defective tray lift motor ▪ Defective bottom plate lift mechanism ▪ Too much paper in the tray ▪ Defective IOB
		1. Check if the paper is not loaded too much. 2. Check if the bottom plate smoothly moves up and down manually. 3. Check and / or replace the tray lift motor / paper lift sensor. 4. Replace the IOB.

WWW.SERVICE-MANUAL.NET

No.	Type	Details (Symptom, Possible Cause, Troubleshooting Procedures)
503-01	B	Tray 3 error (Paper Feed Unit or LCT)
		For the paper feed unit: ▪ When the tray lift motor is turned on, the upper limit is not detected within 10 seconds **For the LCT:** ▪ SC 503-01 occurs if the upper or lower limit is not detected within 8 seconds when the tray lift motor is turned on to lift or lower the tray.
		For the paper feed unit: ▪ Defective tray lift motor or connector disconnection ▪ Defective lift sensor or connector disconnection **For the LCT:** ▪ Defective stack transport clutch or connector disconnection ▪ Defective tray motor or connector disconnection ▪ Defective end fence home position sensor or connector disconnection ▪ Defective upper limit sensor or connector disconnection ▪ Defective tray lift motor or connector disconnection
		1. Check the cable connections. 2. Check and/or replace the defective component.

WWW.SERVICE-MANUAL.NET

No.	Type	Details (Symptom, Possible Cause, Troubleshooting Procedures)
503-02	B	Tray 3 error (Paper Feed Unit or LCT)
		This SC is generated if the following condition occurs 3 consecutive times. **For the paper feed unit:** ▪ When the tray lowers, the tray lift sensor does not go off within 1.5 sec. **For the LCT:** ▪ When the main switch is turned on or when the LCT is set, if the end fence is not in the home position (home position sensor ON), the tray lift motor stops. ▪ If the upper limit does not go off for 1.5 seconds even the tray lift motor turns on to lower the tray after the upper limit has been detected at power on.
		For the paper feed unit: ▪ Defective tray lift motor or connector disconnection ▪ Defective lift sensor or connector disconnection **For the LCT:** ▪ Defective stack transport clutch or connector disconnection ▪ Defective tray motor or connector disconnection ▪ Defective end fence home position sensor or connector disconnection
		1. Check the cable connections. 2. Check and/or replace the defective component.

WWW.SERVICE-MANUAL.NET

No.	Type	Details (Symptom, Possible Cause, Troubleshooting Procedures)
504-01	B	Tray 4 error (Paper Feed Unit or LCT)
		For the two-tray paper feed unit When the tray lift motor is turned on, the upper limit is not detected within 10 seconds. If this condition occurs three consecutive times, the SC is generated. **For the LCT** If the upper or lower limit is not detected within 8 seconds when the tray lift motor is turned on to lift up or lower the tray
		▪ Defective tray lift motor or connector disconnection ▪ Defective lift sensor or connector disconnection
		1. Check the cable connections. 2. Check and/or replace the defective component.

No.	Type	Details (Symptom, Possible Cause, Troubleshooting Procedures)
504-02	B	Tray 4 error (3 Tray Paper Feed Unit)
		This SC is generated if the following condition occurs 3 consecutive times. **For the two-tray paper feed unit** ▪ When the tray lowers, the tray lift sensor does not go off within 1.5 sec. **For the LCT** ▪ If the upper limit does not go off for 1.5 seconds even the tray lift motor turns on to lower the tray after the upper limit has been detected at power on.
		▪ Defective tray lift motor or connector disconnection ▪ Defective lift sensor or connector disconnection
		1. Check the cable connections. 2. Check and/or replace the defective component.

WWW.SERVICE-MANUAL.NET

No.	Type	Details (Symptom, Possible Cause, Troubleshooting Procedures)
505		5th tray lift malfunction (optional LCT)
-01	B	This SC is generated if the following condition occurs: ▪ When the tray lift sensor of the LCT 1200-sheet does not go on after the tray lift motor has turned on to lift the paper tray. ▪ When the tray lift sensor of the LCT 1200-sheet does not go off after the tray lift motor has turned on to lower the paper tray. ▪ When the tray lift sensor of the LCT 1200-sheet does not go on after the pick-up roller solenoid has turned on at power on.
		▪ Tray lift motor defective or disconnected ▪ Tray lift sensor defective or disconnected
		1. Check the harness connections. 2. Replace the tray lift motor. 3. Replace the tray lift sensor.
-02	B	Both tray lift sensor and lower limit sensor are turned on at the same time when the main power is turned on or the right door is closed.
		▪ Tray lift motor defective or disconnected ▪ Tray lift sensor defective or disconnected ▪ Lowe limit sensor defective or disconnected
		1. Check the harness connections. 2. Replace the tray lift motor. 3. Replace the tray lift sensor. 4. Replace the lower limit sensor.

WWW.SERVICE-MANUAL.NET

No.	Type	Details (Symptom, Possible Cause, Troubleshooting Procedures)
530	D	Fusing fan error
		The IOB does not receive the lock signal 10 seconds after turning on the fusing fan.
		▪ Defective fusing fan motor or connector disconnection ▪ Defective IOB
		1. Check the connector and/or replace the fusing fan motor.

No.	Type	Details (Symptom, Possible Cause, Troubleshooting Procedures)
531	D	Ventilation fan (at the left side of the machine) motor-front/rear error
		The IOB does not receive the lock signal for 10 seconds after turning on the ventilation fan motor-front/rear.
		▪ Defective ventilation fan motor-front or rear ▪ Defective IOB
		1. Replace the ventilation fan (at the left side of the machine) motor-front or rear. 2. Replace the IOB.

No.	Type	Details (Symptom, Possible Cause, Troubleshooting Procedures)
532	D	IH coil fan error
		The machine does not detect the fan motor lock signal for 10 seconds while the IH coil fan turns on.
		▪ Disconnected harness ▪ Overload on the IH coil fan motor ▪ Defective IH coil fan motor ▪ Defective IOB
		1. Check or replace the harness. 2. Replace the IH coil fan. 3. Replace the IOB.

WWW.SERVICE-MANUAL.NET

No.	Type	Details (Symptom, Possible Cause, Troubleshooting Procedures)
533	D	IH inverter fan error
		The machine does not detect the fan motor lock signal for 10 seconds while the IH inverter fan turns on.
		▪ Disconnected harness ▪ Overload on the IH inverter fan motor ▪ Defective IH inverter fan motor ▪ Defective IOB
		1. Check or replace the harness. 2. Replace the IH inverter fan. 3. Replace the IOB.

No.	Type	Details (Symptom, Possible Cause, Troubleshooting Procedures)
534	D	Second duct fan error
		The machine does not detect the fan motor lock signal for 10 seconds while the second duct fan turns on.
		▪ Disconnected harness ▪ Overload on the second duct fan motor ▪ Defective second duct motor ▪ Defective IOB
		1. Check or replace the harness. 2. Replace the second duct fan. 3. Replace the IOB.

WWW.SERVICE-MANUAL.NET

No.	Type	Details (Symptom, Possible Cause, Troubleshooting Procedures)
535	D	Paper exit fan error
		The machine does not detect the fan motor lock signal for 10 seconds while the paper exit fan turns on.
		▪ Disconnected harness ▪ Overload on the paper exit fan motor ▪ Defective paper exit motor ▪ Defective IOB
		1. Check or replace the harness. 2. Replace the paper exit fan. 3. Replace the IOB.

No.	Type	Details (Symptom, Possible Cause, Troubleshooting Procedures)
536	D	Third duct fan error
		The motor lock signal error is detected for 10 seconds after the motor lock signal was first detected.
		▪ Defective third duct fan motor ▪ Disconnected or defective harness ▪ Defective IOB
		1. Replace the third duct fan motor. 2. Check or replace the harness. 3. Replace the IOB.

WWW.SERVICE-MANUAL.NET

No.	Type	Details (Symptom, Possible Cause, Troubleshooting Procedures)
540	D	Fusing/Paper exit motor error
		The IOB does not receive the lock signal 2 seconds after turning on the fusing/paper exit motor.
		▪ Motor overload ▪ Defective fusing/paper exit motor ▪ Shorted +24V fuse on the PSU
		1. Check or replace the harness. 2. Replace the fusing/paper exit motor. 3. Replace the +24V fuse on the PSU.

No.	Type	Details (Symptom, Possible Cause, Troubleshooting Procedures)
541	A	Heating roller thermopile error
		The temperature detected by the heating roller thermopile does not reach 0°C for 6 seconds.
		▪ Loose connection of the heating roller thermopile ▪ Defective heating roller thermopile ▪ Defective thermopile
		1. Check if the heating roller thermopile is firmly connected. 2. Replace the heating roller thermopile.

WWW.SERVICE-MANUAL.NET

No.	Type	Details (Symptom, Possible Cause, Troubleshooting Procedures)
542	A	Heating roller warm-up error 1
		▪ The heating roller temperature does not reach 80°C for 20 seconds after the IH inverter turned on. ▪ The center temperature of the heating roller does not reach the ready temperature for 90 seconds after the IH inverter turned on.
		▪ Dirty or defective thermopile ▪ Defective IH coil unit
		1. Check if the heating roller thermopile is firmly connected. 2. Replace the thermopile. 3. Replace the IH coil unit.

No.	Type	Details (Symptom, Possible Cause, Troubleshooting Procedures)
543	A	Heating roller overheat 1 (software error)
		The detected fusing temperature stays at 245°C for 1 second.
		▪ Defective PSU ▪ Defective IOB ▪ Defective BICU
		1. Replace the PSU. 2. Replace the IOB. 3. Replace the BICU.

WWW.SERVICE-MANUAL.NET

No.	Type	Details (Symptom, Possible Cause, Troubleshooting Procedures)
544	A	Heating roller overheat 1 (hardware error)
		During stand-by mode or a print job, the detected heating roller temperature reaches 250°C.
		▪ Defective PSU ▪ Defective IOB ▪ Defective BICU ▪ Defective fusing control system
		Related SC code: SC 543
		1. Replace the PSU. 2. Replace the IOB. 3. Replace the BICU.

No.	Type	Details (Symptom, Possible Cause, Troubleshooting Procedures)
547	D	Zero cross error
		▪ The zero cross signal is detected three times even though the heater relay is off when turning on the main power. ▪ The zero cross signal is not detected for 3 seconds even though the heater relay is on after turning on the main power or closing the front door. ▪ The detection error occurs twice or more in the 11 zero cross signal detections. This error is defined when the detected zero cross signal is less than 39.
		▪ Defective fusing relay ▪ Defective fusing relay circuit ▪ Shorted +24V fuse on the PSU ▪ Unstable power supply
		1. Check the power supply source. 2. Replace the +24V fuse on the PSU. 3. Replace the PSU

WWW.SERVICE-MANUAL.NET

No.	Type	Details (Symptom, Possible Cause, Troubleshooting Procedures)
548	A	Fusing unit rotation error
		The heating roller rotation sensor does not detect change in the actuator for 0.5 seconds after the fusing/paper exit motor has turned on.
		▪ Defective fusing/paper exit motor ▪ Deformed actuator for the heating roller rotation sensor ▪ Defective heating roller rotation sensor ▪ Broken connection between IH inverter and IOB ▪ Incorrectly set fusing unit
		1. Check if the fusing unit is correctly set. 2. Check or replace the actuator for heating roller rotation sensor. 3. Replace the heating roller rotation sensor. 4. Replace the IH inverter. 5. Check the connection between IH inverter and IOB.

No.	Type	Details (Symptom, Possible Cause, Troubleshooting Procedures)
551	A	Heating roller thermistor error
		The temperature at the end of the heating roller measured by the heating roller thermistor does not reach 0°C for 7 seconds.
		▪ Loose connection of pressure roller thermistor ▪ Defective heating roller thermistor
		Related SC code: SC 541
		1. Check that the heating roller thermistor is firmly connected. 2. Replace the heating roller thermistor.

WWW.SERVICE-MANUAL.NET

No.	Type	Details (Symptom, Possible Cause, Troubleshooting Procedures)
552	A	Heating roller warm-up error 2
		▪ The heating roller temperature does not reach 80°C for 20 seconds after the IH inverter turned on. ▪ The temperature at the end of the heating roller does not reach the ready temperature for 89 seconds after the IH inverter turned on.
		▪ Defective heating roller thermistor ▪ Defective IH inverter
		Related SC code: SC 542
		1. Check if the heating roller thermistor is firmly connected. 2. Replace the IH inverter.

No.	Type	Details (Symptom, Possible Cause, Troubleshooting Procedures)
553	A	Heating roller overheat (software error)
		The detected heating roller temperature stays at 245°C or more for 1 second.
		▪ Defective PSU ▪ Defective IOB ▪ Defective BICU
		Related SC code: SC 543
		1. Replace the PSU. 2. Replace the IOB. 3. Replace the BICU.

WWW.SERVICE-MANUAL.NET

No.	Type	Details (Symptom, Possible Cause, Troubleshooting Procedures)
554	A	Heating roller overheat (hardware error)
		The heating roller thermistor detects 250°C or more.
		▪ Defective PSU ▪ Defective IOB ▪ Defective BICU ▪ Defective fusing control system
		1. Replace the PSU. 2. Replace the IOB. 3. Replace the BICU.

No.	Type	Details (Symptom, Possible Cause, Troubleshooting Procedures)
557	C	Zero cross frequency error
		When the zero cross signal is 66 or more and it is detected 10 times or more in 11 detections, the machine determines that input 60 Hz and SC557 occurs.
		▪ Noise (High frequency) ▪ Defective PSU
		1. Check the power supply source. 2. Replace the PSU.

No.	Type	Details (Symptom, Possible Cause, Troubleshooting Procedures)
559	A	Consecutive fusing jam
		The paper jam counter for the fusing unit reaches 3 times. The paper jam counter is cleared if the paper is fed correctly. This SC is activated only when SP1159-001 is set to "1" (default "0").
		▪ Paper jam in the fusing unit.
		Remove the paper that is jammed in the fusing unit. Then make sure that the fusing unit is clean and has no obstacles in the paper feed path.

WWW.SERVICE-MANUAL.NET

No.	Type	Details (Symptom, Possible Cause, Troubleshooting Procedures)
561	A	Pressure roller thermistor error: End
		The temperature at the end of the pressure roller measured by the thermistor does not reach 0°C for 37 seconds.
		▪ Loose connection of the thermistor ▪ Defective thermistor
		1. Check if the thermistor is firmly connected. 2. Replace the thermistor at the end of the pressure roller.

No.	Type	Details (Symptom, Possible Cause, Troubleshooting Procedures)
563	A	Pressure roller overheat 3 (software error)
		The detected pressure roller temperature stays at 215°C or more for 1 second.
		▪ Defective PSU ▪ Defective IOB ▪ Defective BICU
		1. Replace the PSU. 2. Replace the IOB. 3. Replace the BICU.

WWW.SERVICE-MANUAL.NET

No.	Type	Details (Symptom, Possible Cause, Troubleshooting Procedures)
564	A	Pressure roller overheat 3 (hardware error)
		The thermistor detects 220°C or more.
		▪ Defective PSU ▪ Defective IOB ▪ Defective BICU ▪ Defective fusing control system
		1. Replace the PSU. 2. Replace the IOB. 3. Replace the BICU.

No.	Type	Details (Symptom, Possible Cause, Troubleshooting Procedures)
565	A	Pressure roller fusing lamp consecutive full power
		When the fusing unit is not running in the ready condition, the pressure roller fusing lamp keeps ON full power for 300 seconds or more.
		▪ Broken pressure roller fusing lamp ▪ Defective pressure roller thermistor
		1. Replace the pressure roller lamp. 2. Replace the pressure roller thermistor. 3. Replace the PSU.

WWW.SERVICE-MANUAL.NET

No.	Type	Details (Symptom, Possible Cause, Troubleshooting Procedures)
569	D	Pressure roller contact sensor error
		Pressure roller contact sensor does not detect the pressure roller position three times.
		▪ Broken or defective pressure roller contact sensor ▪ Deformed or broken pressure roller contact sensor feeler ▪ Defective pressure roller contact motor ▪ Defective fusing unit
		1. Check or replace the harness of the pressure roller contact sensor. 2. Replace the pressure roller contact sensor. 3. Replace the pressure roller contact motor.

No.	Type	Details (Symptom, Possible Cause, Troubleshooting Procedures)
571	A	Pressure roller thermistor error: Center
		The center temperature of the pressure roller measured by the thermistor does not reach 0°C for 37 seconds.
		▪ Loose connection of the thermistor ▪ Defective thermistor
		1. Check if the thermistor is firmly connected. 2. Replace the center thermistor.

WWW.SERVICE-MANUAL.NET

No.	Type	Details (Symptom, Possible Cause, Troubleshooting Procedures)
581	D	IH inverter input voltage error
		The IH inverter detects 70 V or less/150 V or more for 10 seconds. The IH inverter detects 160 V or less/300 V or more for 10 seconds.
		▪ Unusual input voltage ▪ Defective IH inverter
		1. Check if the power supply voltage of the customer site is within the proper power voltage range. 1. Check CN981 on the IH inverter. 2. Replace the IH inverter.

No.	Type	Details (Symptom, Possible Cause, Troubleshooting Procedures)
582	D	IH inverter current error at power on
		The output current from the IH inverter does not reach the proper value when the IH inverter turns on.
		▪ Disconnected power input terminal 1 and 2 ▪ Defective IH inverter ▪ Defective IH coil unit ▪ Defective fusing unit
		1. Check the power input terminals 1 and 2. 2. Replace the IH inverter. 3. Replace the IH coil unit. 4. Replace the fusing unit.

WWW.SERVICE-MANUAL.NET

No.	Type	Details (Symptom, Possible Cause, Troubleshooting Procedures)
585	A	IH coil unit full power (1250W) error
		The IH coil unit full power (1250W) continues for 200 seconds or more.
		▪ Defective IH inverter ▪ Defective BICU ▪ Defective IOB ▪ Broken connection between IH inverter and IOB ▪ Defective thermopile
		1. Replace the IH inverter. 2. Replace the BICU. 3. Replace the IOB. 4. Check the connection between IH inverter and IOB. 5. Replace the thermopile.

WWW.SERVICE-MANUAL.NET

6.1.7 SERVICE CALL TABLES - 6

SC6xx: Device Communication

No.	Type	Details (Symptom, Possible Cause, Troubleshooting Procedures)
610	D	Mechanical counter error: K
611	D	Mechanical counter error: FC
-	-	This SC is only for NA models. The machine detects the mechanical counter error when SP5987-001 is set to "1".
		▪ Disconnected mechanical counter ▪ Defective mechanical counter
		1. Check or replace the mechanical counter.

No.	Type	Details (Symptom, Possible Cause, Troubleshooting Procedures)
620	D	ARDF communication error
		After the ARDF is detected, the break signal occurs or communication timeout occurs.
		▪ Incorrect installation of ARDF ▪ ARDF defective ▪ BICU board defective ▪ External noise
		1. Check the cable connection of the ARDF. 2. Shut out the external noise. 3. Replace the ARDF. 4. Replace the BICU board.

WWW.SERVICE-MANUAL.NET

No.	Type	Details (Symptom, Possible Cause, Troubleshooting Procedures)
621	D	Finisher communication error
622	D	Paper tray unit communication error
-	-	While the IOB communicates with an optional unit, an SC code is displayed if one of following conditions occurs. ▪ The IOB receives the break signal which is generated by the peripherals only just after the main switch is turned on. ▪ When the IOB does not receive an OK signal from a peripheral 100ms after sending a command to it. The IOB resends the command. The IOB does not receive an OK signal after sending the command 3 times.
		▪ Cable problems ▪ IOB problems ▪ BICU problems ▪ PSU problems in the machine ▪ Main board problems in the peripherals
		1. Check if the cables of peripherals are correctly connected. 2. Replace the IOB or main board of peripherals. 3. Replace the BICU if no power is supplied to peripherals.

No.	Type	Details (Symptom, Possible Cause, Troubleshooting Procedures)
623	D	2nd Paper Bank communication error
		This SC is not issued for this machine. When a communication error signal between the 1st paper bank and 2nd paper bank is received.
		▪ Loose or disconnected connector
		Check the connection between the main machine and paper feed unit.

WWW.SERVICE-MANUAL.NET

No.	Type	Details (Symptom, Possible Cause, Troubleshooting Procedures)
632	CTL B	Counter device error 1
		After 3 attempts to send a data frame to the optional counter device via the serial communication line, no ACK signal was received within 100 ms.
		▪ Serial line between the optional counter device, the relay board and copier control board is disconnected or damaged ▪ Make sure that SP5113 is set to enable the optional counter device.
		1. Check if the setting of the SP5113 is correctly set. 2. Check the connection between the main machine and optional counter device.

No.	Type	Details (Symptom, Possible Cause, Troubleshooting Procedures)
633	CTL B	Counter device error 2
		After communication is established, the controller receives the brake signal from the accounting device.
		▪ Serial line between the optional counter device, the relay board and copier control board is disconnected or damaged ▪ Make sure that SP5113 is set to enable the optional counter device.
		1. Check if the setting of the SP5113 is correctly set. 2. Check the connection between the main machine and optional counter device.

WWW.SERVICE-MANUAL.NET

No.	Type	Details (Symptom, Possible Cause, Troubleshooting Procedures)
634	CTL B	Counter device error 3
		A backup RAM error was returned by the counter device.
		▪ Counter device control board defective ▪ Backup battery of counter device defective
		Replace the counter device.

No.	Type	Details (Symptom, Possible Cause, Troubleshooting Procedures)
635	CTL B	Counter device error 4
		A backup battery error was returned by the counter device.
		▪ Counter device control board defective ▪ Backup battery of counter device defective
		Replace the counter device.

WWW.SERVICE-MANUAL.NET

No.	Type	Details (Symptom, Possible Cause, Troubleshooting Procedures)
636	CTL D	SD Card Error
01	-	Expanded authentication module error
		There is no expanded authentication module in the machine. The SD card or the file of the expanded authentication module is broken. There is no DESS module in the machine.
		▪ No expanded authentication module ▪ Defective SD card ▪ No DESS module
		1. Install the expanded authentication module. 2. Install the SD card. 3. Install the DESS module.
02	-	Version error
		The version of the expanded authentication module is not correct.
		▪ Incorrect module version
		Install the correct file of the expanded authentication module.

No.	Type	Details (Symptom, Possible Cause, Troubleshooting Procedures)
641	CTL D	BICU control data transfer abnormal
		A sampling of the control data sent from the BICU reveals an abnormality.
		▪ Controller board defective ▪ External noise ▪ BICU board defective
		1. Replace the controller board. 2. Replace the BICU.

WWW.SERVICE-MANUAL.NET

No.	Type	Details (Symptom, Possible Cause, Troubleshooting Procedures)
650	CTL B	Communication error of the remote service modem (Cumin-M)
-001	-	Authentication error
		The authentication for the Cumin-M fails at a dial up connection.
		▪ Incorrect SP settings ▪ Disconnected telephone line ▪ Disconnected modem board
		1. Check and set the correct user name (SP5816-156) and password (SP5816-157).
-004	-	Incorrect modem setting
		Dial up fails due to the incorrect modem setting.
		Same as -001
		1. Check and set the correct AT command (SP5819-160).
-005	-	Communication line error
		The supplied voltage is not sufficient due to the defective communication line or defective connection.
		Same as -001
		1. Consult with the user's local telephone company.

WWW.SERVICE-MANUAL.NET

No.	Type	Details (Symptom, Possible Cause, Troubleshooting Procedures)
651	CTL C	Incorrect dial up connection
		-001: Program parameter error
		-002: Program execution error
		An unexpected error occurs when the modem (Cumin-M) tries to call the center with a dial up connection.
		▪ Caused by a software bug
		No action required because this SC does not interfere with operation of the machine.

No.	Type	Details (Symptom, Possible Cause, Troubleshooting Procedures)
669	D	EEPROM error
		Retry of EEPROM communication fails three times after the machine has detected the EEPROM error.
		▪ Caused by noise
		Turn the main power switch off and on.

WWW.SERVICE-MANUAL.NET

No.	Type	Details (Symptom, Possible Cause, Troubleshooting Procedures)
670	CTL D	Engine start up error
		The ready signal from the engine board is not detected.
		▪ Defective BICU
		1. Replace the BICU.
671	CTL D	Engine board mismatch error
		Engine board and controller mismatch detected.
		▪ Wrong engine board installed. ▪ Wrong controller board installed. ▪ Check the type of engine board and controller board.
		1. Replace the BICU. 2. Replace the controller board.

No.	Type	Details (Symptom, Possible Cause, Troubleshooting Procedures)
672	CTL D	Controller-to-operation panel communication error at startup
		After powering on the machine, the communication circuit between the controller and the operation panel is not opened, or communication with controller is interrupted after a normal startup.
		▪ Controller stall ▪ Controller board installed incorrectly ▪ Controller board defective ▪ Operation panel connector loose or defective
		1. Check the harness connection. 2. Replace the controller board.

WWW.SERVICE-MANUAL.NET

No.	Type	Details (Symptom, Possible Cause, Troubleshooting Procedures)
681	D	RFID: Communication error ▪ Communication error occurs when the RFID starts to communicate with the RFID receptor. ▪ Retry of RFID communication fails three times after the machine has detected the RFID communication error.
		▪ Defective RFID reader and writer ▪ Disconnected ASAP I/F ▪ No memory chip on the toner cartridge ▪ Noise
		1. Replace the RFID controller board. 2. Replace the toner cartridge.

No.	Type	Details (Symptom, Possible Cause, Troubleshooting Procedures)
682	D	Memory chip at TD sensor: Communication error
		Retry of memory chip communication fails three times after the machine has detected the memory chip communication error.
		▪ Damaged memory chip data ▪ Disconnected inter face ▪ No memory chip on the development unit ▪ Noise
		1. Replace the PCDU. 2. Replace the BICU.

WWW.SERVICE-MANUAL.NET

No.	Type	Details (Symptom, Possible Cause, Troubleshooting Procedures)
683	B	RFID: Unit check error
		The machine gets RFID communication error even the toner cartridges have not been installed in the machine.
		Caused by noise
		Turn the main power switch off and on.

No.	Type	Details (Symptom, Possible Cause, Troubleshooting Procedures)
687	D	Memory address command error
		The BICU does not receive a memory address command from the controller 120 seconds after paper is in the position for registration.
		▪ Loose connection ▪ Defective controller ▪ Defective BICU
		1. Check if the controller is firmly connected to the BICU. 2. Replace the controller. 3. Replace the BICU.

WWW.SERVICE-MANUAL.NET

No.	Type	Details (Symptom, Possible Cause, Troubleshooting Procedures)
690	D	GAVD communication error
		▪ The I2C bus device ID is not identified during initialization. ▪ A device-status error occurs during I2C bus communication. ▪ The I2C bus communication is not established due to an error other than a buffer shortage.
		▪ Loose connection ▪ Defective BICU ▪ Defective LD controller board
		1. Turn the main switch off and on. 2. Check the cable connection. 3. Replace the laser optics-housing unit. 4. Replace the BICU board.

WWW.SERVICE-MANUAL.NET

6.1.8 SERVICE CALL TABLES - 7

SC7xx: Peripherals

No.	Type	Details (Symptom, Possible Cause, Troubleshooting Procedures)
700	D	Original stopper HP error
		When the pick-up motor turns on clockwise, the original stopper HP sensor does not detect the home position of the original stopper.
		▪ Detached timing belt for the pick-up motor ▪ Defective original stopper HP sensor ▪ Defective pick-up motor ▪ Defective DF drive board
		1. Check the timing belt for the pick-up motor. 2. Replace the DF drive board if the pick-up motor does not work correctly. 3. Replace the pick-up motor. 4. Replace the original stopper HP sensor.

No.	Type	Details (Symptom, Possible Cause, Troubleshooting Procedures)
701	D	Pick-up roller HP error
		When the pick-up motor turns on counterclockwise, the pick-up roller HP sensor does not detect the home position of the pick-up roller.
		▪ Defective pick-up roller HP sensor ▪ Defective pick-up motor ▪ Defective DF drive board
		1. Replace the DF drive board if the pick-up motor does not work correctly. 2. Replace the pick-up motor. 1. Replace the pick-up roller HP sensor.

WWW.SERVICE-MANUAL.NET

No.	Type	Details (Symptom, Possible Cause, Troubleshooting Procedures)
705	D	ADF original table lift malfunction
		One of the following conditions was detected. ▪ The bottom plate position sensor does not activate when the bottom plate motor lifts the original table. ▪ The bottom plate HP sensor does not activate when the bottom plate motor lowers the original table.
		▪ Loose, broken or defective harnesses, connectors of the bottom plate position sensor, bottom plate HP sensor, bottom plate motor ▪ Defective bottom plate position sensor ▪ Defective bottom plate HP sensor ▪ Defective bottom plate motor ▪ Defective ADF main control board
		Bottom plate motor rotation: 1. Check or replace the bottom plate position sensor. 2. Check or replace the bottom plate HP sensor. **No bottom plate motor rotation:** 1. Replace the bottom plate motor. 2. Replace the ADF main control board.

No.	Type	Details (Symptom, Possible Cause, Troubleshooting Procedures)
708	D	DF fan error
		DF fan motor lock signal is detected after the original transportation has finished.
		-
		Turn the machine off and on.

WWW.SERVICE-MANUAL.NET

No.	Type	Details (Symptom, Possible Cause, Troubleshooting Procedures)
715 -001	D	ADF pick-up motor driver error
		The protection circuit of the motor driver stops the motor operation due to over current or high temperature.
		-
		Turn the machine off and on.
715 -002	D	ADF feed motor driver error
		The protection circuit of the motor driver stops the motor operation due to over current, high temperature or driver open.
		-
		Turn the machine off and on.
715 -003	D	ADF transport motor driver error
		The protection circuit of the motor driver stops the motor operation due to over current, high temperature or driver open.
		-
		Turn the machine off and on.
715 -004	D	ADF exit motor driver error (one-pass through model only)
		The protection circuit of the motor driver stops the motor operation due to over current, high temperature or driver open.
		-
		Turn the machine off and on.
715 -006	D	ADF exit motor driver error (auto reverse model only)
		The protection circuit of the motor driver stops the motor operation due to over current, high temperature or driver open.
		-
		Turn the machine off and on.

WWW.SERVICE-MANUAL.NET

No.	Type	Details (Symptom, Possible Cause, Troubleshooting Procedures)
721	B	Finisher jogger motor error
		The jogger fences move out of the home position but the HP sensor output does not change within the specified number of pulses. The 1st failure issues an original jam message, and the 2nd failure issues this SC code.
		▪ Jogger HP sensor disconnected, defective ▪ Jogger motor disconnected, defective ▪ Jogger motor overloaded due to obstruction ▪ Finisher main board and jogger motor
		1. Check the connections and cables for the components mentioned above. 2. Check for blockages in the jogger motor mechanism. 3. Replace the jogger HP sensor and/or jogger motor. 4. Replace the finisher main board.

WWW.SERVICE-MANUAL.NET

No.	Type	Details (Symptom, Possible Cause, Troubleshooting Procedures)
723	B	Stack feed-out motor error
		▪ The stack feed-out HP sensor does not detect the home position of the stack feed-out belt 3000ms after the stack feed-out belt has moved to its home position. ▪ The stack feed-out HP sensor does not turn off 200 ms after the stack feed-out belt has moved from its home position. ▪ The 1st detection failure causes a jam error, and the 2nd failure causes this SC code.
		▪ Defective stack feed-out HP sensor ▪ Overload on the stack feed-out motor ▪ Defective stack feed-out motor ▪ Defective main board ▪ Disconnected or defective harness
		1. Check the connections and cables for the components mentioned above. 2. Check for blockages in the stack feed-out motor mechanism. 3. Replace the stack feed-out HP sensor and/or stack feed-out motor. 4. Replace the finisher main board.

WWW.SERVICE-MANUAL.NET

No.	Type	Details (Symptom, Possible Cause, Troubleshooting Procedures)
725	B	Finisher exit guide plate motor error
		After moving away from the guide plate position sensor, the exit guide is not detected at the home position within the prescribed time. The 1st detection failure issues a jam error, and the 2nd failure issues this SC code.
		▪ Guide plate motor disconnected, defective ▪ Guide plate motor overloaded due to obstruction ▪ Guide plate position sensor disconnected, defective
		1. Check the connections and cables for the components mentioned above. 2. Check for blockages in the guide plate motor mechanism. 3. Replace the guide plate position sensor and/or guide plate motor 4. Replace the finisher main board.

No.	Type	Details (Symptom, Possible Cause, Troubleshooting Procedures)
730	B	Finisher Tray 1 shift motor error
		The shift roller HP sensor of the upper tray does not activate within the prescribed time after the shift tray starts to move toward or away from the home position. The 1st detection failure issues a jam error, and the 2nd failure issues this SC code.
		▪ Shift tray HP sensor of the upper tray disconnected, defective ▪ Shift tray motor of the upper tray is disconnected, defective ▪ Shift tray motor of the upper tray overloaded due to obstruction
		1. Check the connections and cables for the components mentioned above. 2. Check for blockages in shift motor mechanism. 3. Replace the shift tray HP sensor and/or shift motor 4. Replace the finisher main board.

WWW.SERVICE-MANUAL.NET

No.	Type	Details (Symptom, Possible Cause, Troubleshooting Procedures)
740	B	Finisher corner stapler motor error
		The 1st detection failure issues a jam error, and the 2nd failure issues this SC code. **For the 2000/3000-sheet (booklet) finisher** ▪ Staple movement is not finished after a certain time. **For the 1000-sheet finisher** ▪ The stapler motor does not switch off within the prescribed time after operating. ▪ The HP sensor of the staple unit does not detect the home position after the staple unit moves to its home position. ▪ The HP sensor of the staple unit detects the home position after the staple unit moves from its home position.
		▪ Staple jam ▪ Motor overload ▪ Defective stapler motor
		1. Check the connections and cables for the components mentioned above. 2. Replace the HP sensor and/or stapler motor 3. Replace the finisher main board.

WWW.SERVICE-MANUAL.NET

No.	Type	Details (Symptom, Possible Cause, Troubleshooting Procedures)
741	B	Finisher corner stapler rotation motor error
		The stapler does not return to its home position within the specified time after stapling. The 1st detection failure issues a jam error, and the 2nd failure issues this SC code.
		▪ Defective stapler rotation motor ▪ Overload to the stapler rotation motor ▪ Defective stapler rotation HP sensor
		1. Replace the stapler rotation motor. 2. Replace the stapler rotation HP sensor.

No.	Type	Details (Symptom, Possible Cause, Troubleshooting Procedures)
742	B	Finisher stapler movement motor error
		The 1st detection failure issues a jam error, and the 2nd failure issues this SC code. **For the 2000/3000-sheet (booklet) finisher** ▪ Staple movement is not finished for a certain time. **For the 1000-sheet finisher** ▪ The stapler HP sensor is not activated within the specified time after the stapler motor turned on. (First detection: jam error, consecutive twice detection SC code).
		▪ Motor overload ▪ Loose connection of the stapler home position sensor ▪ Loose connection of the stapler movement motor ▪ Defective stapler home position sensor ▪ Defective stapler movement motor
		1. Check the connection of the stapler movement motor. 2. Check the connection of the stapler home position sensor. 3. Replace the stapler home position sensor. 4. Replace the stapler movement motor.

WWW.SERVICE-MANUAL.NET

No.	Type	Details (Symptom, Possible Cause, Troubleshooting Procedures)
743	B	Booklet stapler motor error 1
		The 1st detection failure issues a jam error, and the 2nd failure issues this SC code. **For the 2000/3000-sheet (booklet) finisher** The front stapler unit saddle-stitch motor does not start operation within the specified time.
		▪ Motor overload ▪ Loose connection of the front stapler motor ▪ Defective front stapler motor
		1. Replace the front stapler motor.

No.	Type	Details (Symptom, Possible Cause, Troubleshooting Procedures)
744	B	Booklet staple motor error 2
		The 1st detection failure issues a jam error, and the 2nd failure issues this SC code. **For the 2000/3000-sheet (booklet) finisher** The rear stapler unit saddle-stitch motor does not start operation within the specified time.
		▪ Motor overload ▪ Loose connection of the rear stapler motor ▪ Defective rear stapler motor
		1. Replace the front stapler motor.

WWW.SERVICE-MANUAL.NET

No.	Type	Details (Symptom, Possible Cause, Troubleshooting Procedures)
750	B	1000/2000/3000-sheet (booklet) finisher: Tray lift motor error
		The 1st detection failure issues a jam error, and the 2nd failure issues this SC code. The upper tray paper height sensor does not change its status with the specified time after the tray raises or lowers.
		▪ Motor overload ▪ Loose connection of the shift tray motor ▪ Defective shift tray motor
		1. Check the connections to the shift tray motor. 2. Replace the shift tray motor.

No.	Type	Details (Symptom, Possible Cause, Troubleshooting Procedures)
753	B	Stacking sponge roller motor
		Occurs during the operation of the stacking sponge roller motor.
		▪ Disconnected, looser or defective motor harness ▪ Motor overloaded ▪ Disconnected, loose or defective sensor harness ▪ Defective stacking sponge roller motor ▪ Defective stacking roller HP sensor
		1. Check the connections of the stacking sponge roller motor. 2. Check the connections of the stacking sponge roller HP sensor. 3. Replace the stacking sponge roller motor. 4. Replace the stacking sponge roller HP sensor.

WWW.SERVICE-MANUAL.NET

No.	Type	Details (Symptom, Possible Cause, Troubleshooting Procedures)
760	B	Finisher punch motor error
		The punch HP sensor is not activated within the specified time after the punch motor turned on. The 1st detection failure issues a jam error, and the 2nd failure issues this SC code.
		▪ Punch HP sensor disconnected, defective ▪ Punch motor disconnected or defective ▪ Punch motor overload due to obstruction
		1. Check the connections and cables for the punch motor and HP sensor. 2. Check for blockages in the punch motor mechanism. 3. Replace the punch HP sensor and/or punch motor 4. Replace the finisher main board.

No.	Type	Details (Symptom, Possible Cause, Troubleshooting Procedures)
761	B	Finisher folder plate motor error
		The folder plate moves but is not detected at the home position within the specified time. The 1st detection failure issues a jam error, and the 2nd failure issues this SC code.
		▪ Folder plate HP sensor disconnected, defective ▪ Folder plate motor disconnected, defective ▪ Folder plate motor overloaded due to obstruction.
		1. Check the connections and cables for the folder plate motor and HP sensor. 2. Check for blockages in the folder plate motor mechanism. 3. Replace the folder plate HP sensor and/or folder plate motor 4. Replace the finisher main board.

WWW.SERVICE-MANUAL.NET

No.	Type	Details (Symptom, Possible Cause, Troubleshooting Procedures)
763	B	Punch movement motor error
		The punch unit moves but is not detected at the home position within the specified time. The 1st detection failure issues a jam error, and the 2nd failure issues this SC code.
		▪ Motor harness disconnected, loose, defective ▪ Defective motor
		1. Check the connections to the punch movement motor. 2. Replace the punch movement motor

No.	Type	Details (Symptom, Possible Cause, Troubleshooting Procedures)
764	B	Paper position sensor slide motor error
		The paper position sensor moves but is not detected at the home position within the specified time. The 1st detection failure issues a jam error, and the 2nd failure issues this SC code.
		▪ Motor harness disconnected, loose, defective ▪ Defective motor
		1. Check the connections to the paper position sensor slide motor. 2. Replace the paper position sensor slide motor.

No.	Type	Details (Symptom, Possible Cause, Troubleshooting Procedures)
765	B	Fold unit bottom fence motor error
		The bottom fence of the fold unit moves but is not detected at the home position within the specified time. The 1st detection failure issues a jam error, and the 2nd failure issues this SC code.
		▪ Motor harness disconnected, loose, defective ▪ Defective motor
		1. Check the connections to the fold unit bottom fence motor. 2. Replace the fold unit bottom fence motor.

WWW.SERVICE-MANUAL.NET

No.	Type	Details (Symptom, Possible Cause, Troubleshooting Procedures)
766	B	Clamp roller retraction motor error
		The clamp roller retraction motor moves but is not detected at the home position within the specified time. The 1st detection failure issues a jam error, and the 2nd failure issues this SC code.
		▪ Motor harness disconnected, loose, defective ▪ Defective motor
		1. Check the connections to the clamp roller retraction motor motor. 2. Replace the clamp roller retraction motor motor.

No.	Type	Details (Symptom, Possible Cause, Troubleshooting Procedures)
767	B	Stack junction gate motor error
		The stack junction gate moves but is not detected at the home position within the specified time. The 1st detection failure issues a jam error, and the 2nd failure issues this SC code.
		▪ Motor harness disconnected, loose, defective ▪ Defective motor
		1. Check the connections to the stack junction gate motor. 2. Replace the stack junction gate.

WWW.SERVICE-MANUAL.NET

No.	Type	Details (Symptom, Possible Cause, Troubleshooting Procedures)
770	B	Shift motor error
		The shift motor HP sensor does not detect any change for 1.86 seconds after the shift motor has turned on at power on or during its operation.
		▪ Defective shift motor ▪ Defective shift motor HP sensor
		1. Check the connections to the shift motor and the shift motor HP sensor. 2. Replace the shift motor or the shift motor HP sensor.

No.	Type	Details (Symptom, Possible Cause, Troubleshooting Procedures)
791	D	Bridge unit error
		The machine recognizes the finisher, but does not recognize the bridge unit.
		▪ Defective connector ▪ Broken harness
		1. Check the connections between the bridge unit and the machine. 2. Install a new bridge unit.

No.	Type	Details (Symptom, Possible Cause, Troubleshooting Procedures)
792	B	Finisher error
		The machine does not recognize the finisher, but recognizes the bridge unit.
		▪ Defective connector ▪ Defective harness ▪ Incorrect installation
		1. Check the connections between the finisher and the machine. 2. Install a new finisher.

WWW.SERVICE-MANUAL.NET

6.1.9 SERVICE CALL TABLES - 8

SC8xx: Overall System

No.	Type	Details (Symptom, Possible Cause, Troubleshooting Procedures)
816	CTL D	Energy saving I/O sub-system error
		The energy saving I/O sub-system detects an error.
		▪ Controller board defective
		Replace the controller board.

No.	Type	Details (Symptom, Possible Cause, Troubleshooting Procedures)	
819	CTL C	Fatal kernel error	
		Due to a control error, a RAM overflow occurred during system processing. One of the following messages was displayed on the operation panel.	
[0x5032]		HAIC-P2 error	▪ System program defective ▪ Controller board defective ▪ Optional board defective ▪ Replace controller firmware
[0x5245]		vm_pageout: VM is full	
[0x5355]		L2 status time out	
[554C]		USB error	

Trouble-shooting

WWW.SERVICE-MANUAL.NET

No.	Type	Details (Symptom, Possible Cause, Troubleshooting Procedures)
820	CTL D	Self-diagnostics error: CPU [XXXX]: Detailed error code
[0612]		Cut-in in ASIC occurs.
		▪ Defective ASIC ▪ Defective devices in which ASIC detects cut-in.
		1. Replace the controller board.

No.	Type	Details (Symptom, Possible Cause, Troubleshooting Procedures)
833	CTL C	Self-diagnostic error 8: Engine I/F ASIC
[0F30] [0F31]		▪ ASIC (Mandolin) for system control could not be detected. After the PCI configuration, the device ID for the ASIC could not be checked.
		Replace the BICU.
[0F41]		▪ ASIC (Mandolin) for system control could not be detected. After the PCI configuration, the device ID for the ASIC could not be checked.
		Replace the BICU.
[50B1]		Could not initialize or read the bus connection.
		▪ Check for loose connections at the mother board.
		Replace the mother board
[50B2]		Value of the SSCG register is incorrect.
		▪ Check for loose connections at the mother board.
		Replace the mother board

WWW.SERVICE-MANUAL.NET

No.	Type	Details (Symptom, Possible Cause, Troubleshooting Procedures)
851	CTL B	IEEE1394 interface error
		The 1394 interface is unusable.
		▪ Defective IEEE1394 ▪ Defective controller.
		1. Turn the main switch off and on. 2. Replace the IEEE1394 interface board. 3. Replace the controller.

No.	Type	Details (Symptom, Possible Cause, Troubleshooting Procedures)
853	CTL B	Wireless LAN card not detected
		The wireless LAN card is not detected before communication is established, though the wireless LAN board is detected.
		▪ Loose connection
		1. Check the connection.

No.	Type	Details (Symptom, Possible Cause, Troubleshooting Procedures)
854	CTL B	Wireless LAN/Bluetooth card not detected
		The wireless LAN/Bluetooth card is not detected after communication is established, but the wireless LAN board is detected.
		▪ Loose connection
		1. Check the connection.

WWW.SERVICE-MANUAL.NET

No.	Type	Details (Symptom, Possible Cause, Troubleshooting Procedures)
855 856	CTL B	Wireless LAN/Bluetooth card error
		An error is detected in the wireless LAN/Bluetooth card.
		▪ Loose connection ▪ Defective wireless LAN/Bluetooth card
		1. Check the connection. 2. Replace the wireless LAN/Bluetooth card.

No.	Type	Details (Symptom, Possible Cause, Troubleshooting Procedures)
857	CTL B	USB interface error
		The USB interface cannot be used due to a driver error.
		▪ Defective USB driver ▪ Loose USB connection
		Replace the controller board.

WWW.SERVICE-MANUAL.NET

No.	Type	Details (Symptom, Possible Cause, Troubleshooting Procedures)
858	CTL C	HDD Encryption unit error 1
		A serious error occurs when data is encrypted to update an encryption key with the HDD encryption unit.
	[0]	Encryption key acquisition error: The controller fails to get a new encryption key.
		▪ Defective controller board 1. Replace the controller board.
	[1]	Encryption key setting for HDD error: The controller fails to copy a new encryption key to the HDD.
		▪ Defective SATA chip on the controller board 1. Replace the controller board.
	[2]	NVRAM data encryption error 1: An error occurs while the NVRAM data is encrypted.
		▪ Defective SATA chip on the controller board 1. Replace the controller board.
	[30]	NVRAM data encryption error 2: An error occurs before the NVRAM data is encrypted.
		▪ Defective controller board 1. Replace the controller board.
	[31]	Other error: A serious error occurs while the data is encrypted.
		Same as SC991

WWW.SERVICE-MANUAL.NET

No.	Type	Details (Symptom, Possible Cause, Troubleshooting Procedures)
859	CTL C	HDD Encryption unit error 2
		A serious error occurs when the HDD data is encrypted to update an encryption key with the HDD encryption unit.
	[8]	HDD check error: The HDD is not correctly installed.
		▪ No HDD installed ▪ Unformatted HDD ▪ The encryption key on the controller is different from the one on the HDD 1. Install the HDD correctly. 2. Initialize the HDD.
	[9]	Power failure during the data encryption: The data encryption (NVRAM and HDD) has not been completed.
		▪ Power failure during the data encryption 1. Initialize the HDD.
	[10]	Data read/write error: The DMAC error is detected twice or more.
		▪ Same as SC863

No.	Type	Details (Symptom, Possible Cause, Troubleshooting Procedures)
860	CTL B	HDD: Initialization error
		The controller detects that the hard disk fails.
		▪ HDD not initialized ▪ Defective HDD
		1. Reformat the HDD. 2. Replace the HDD.

WWW.SERVICE-MANUAL.NET

No.	Type	Details (Symptom, Possible Cause, Troubleshooting Procedures)
861	CTL D	HDD: Reboot error
		The HDD does not become ready within 30 seconds after the power is supplied to the HDD.
		▪ Loose connection ▪ Defective cables ▪ Defective HDD ▪ Defective controller
		1. Check the connection between the HDD and controller. 2. Check and replace the cables. 3. Replace the HDD. 4. Replace the controller.

No.	Type	Details (Symptom, Possible Cause, Troubleshooting Procedures)
863	CTL D	HDD: Read error
		The data stored in the HDD cannot be read correctly.
		▪ Defective HDD ▪ Defective controller
		1. Replace the HDD. 2. Replace the controller.

No.	Type	Details (Symptom, Possible Cause, Troubleshooting Procedures)
864	CTL D	HDD: CRC error
		While reading data from the HDD or storing data in the HDD, data transmission fails.
		▪ Defective HDD
		1. Replace the HDD.

WWW.SERVICE-MANUAL.NET

No.	Type	Details (Symptom, Possible Cause, Troubleshooting Procedures)
865	CTL D	HDD: Access error
		An error is detected while operating the HDD.
		▪ Defective HDD
		1. Replace the HDD.

No.	Type	Details (Symptom, Possible Cause, Troubleshooting Procedures)
866	CTL B	SD card authentication error
		A correct license is not found in the SD card.
		▪ SD-card data is corrupted.
		1. Store correct data in the SD card.

No.	Type	Details (Symptom, Possible Cause, Troubleshooting Procedures)
867	CTL D	SD card error
		The SD card is ejected from the slot.
		1. Install the SD card. 2. Turn the main switch off and on.

No.	Type	Details (Symptom, Possible Cause, Troubleshooting Procedures)
868	CTL D	SD card access error ▪ -13 to -3: File system error ▪ Other number: Device error
		An error report is sent from the SD card reader. ▪ An error is detected in the SD card.
		1. For a file system error, format the SD card on your PC. 2. For a device error, turn the mains switch off and on. 3. Replace the SD card. 4. Replace the controller.

WWW.SERVICE-MANUAL.NET

No.	Type	Details (Symptom, Possible Cause, Troubleshooting Procedures)
870	CTL B	Address book error
		An error is detected in the data copied to the address book over a network.
		▪ Defective software program ▪ Defective HDD ▪ Incorrect path to the server
		1. Initialize the address book data (SP5-846-050). 2. Initialize the user information (SP5-832-006). 3. Replace the HDD.

No.	Type	Details (Symptom, Possible Cause, Troubleshooting Procedures)
872	CTL B	HDD mail data error
		An error is detected in the HDD at machine initialization.
		▪ Defective HDD ▪ Power failure during an access to the HDD
		1. Turn the main switch off and on. 2. Initialize the HDD partition (SP5-832-007). 3. Replace the HDD.

No.	Type	Details (Symptom, Possible Cause, Troubleshooting Procedures)
873	CTL B	HDD mail transfer error
		An error is detected in the HDD at machine initialization.
		▪ Defective HDD ▪ Power failure during an access to the HDD
		1. Initialize the HDD partition (SP5-832-008). 2. Replace the HDD.

WWW.SERVICE-MANUAL.NET

No.	Type	Details (Symptom, Possible Cause, Troubleshooting Procedures)
874	CTL D	Delete All error 1: HDD
		An error is detected while all of the HDD or NVRAM are formatted physically by the Data Overwrite Security Unit (D377).
		▪ Data Overwrite Security Unit (SD card) not installed ▪ Defective HDD
		1. Install the Data Overwrite Security Unit (D377). 2. Replace the HDD.

No.	Type	Details (Symptom, Possible Cause, Troubleshooting Procedures)
875	CTL D	Delete All error 2: Data area
		An error is detected while all of the HDD or NVRAM are formatted logically by the Data Overwrite Security Unit (D377).
		▪ The logical format for the HDD fails.
		1. Turn the main switch off/on and try the operation again

No.	Type	Details (Symptom, Possible Cause, Troubleshooting Procedures)
876	CTL D	Log Data Error
		An error was detected in the handling of the log data at power on or during machine operation. This can be caused by switching the machine off while it is operating.
-001		Log Data Error 1
		▪ Damaged log data file in the HDD
		1. Initialize the HDD with SP5832-004.
-002		Log Data Error 2
		▪ An encryption module not installed
		1. Disable the log encryption setting with SP9730-004 ("0" is off.)

WWW.SERVICE-MANUAL.NET

No.	Type	Details (Symptom, Possible Cause, Troubleshooting Procedures)
		1. Install the DESS module.
-003		Log Data Error 3
		▪ Invalid log encryption key due to defective NVRAM data
		1. Initialize the HDD with SP5832-004. 2. Disable the log encryption setting with SP9730-004 ("0" is off.)
-004		Log Data Error 4
		▪ Unusual log encryption function due to defective NVRAM data
		1. Initialize the HDD with SP5832-004.
-005		Log Data Error 5
		▪ Installed NVRAM or HDD which is used in another machine
		1. Reinstall the previous NVRAM or HDD. 2. Initialize the HDD with SP5832-004.
-099		Log Data Error 99
		▪ Other than the above causes
		1. Ask your supervisor.

No.	Type	Details (Symptom, Possible Cause, Troubleshooting Procedures)
877	CTL D	HDD Data Overwrite Security SD card error
		The 'all delete' function cannot be executed but the Data Overwrite Security Unit (D377) is installed and activated.
		▪ Defective SD card (D377) ▪ SD card (D377) not installed
		1. Replace the NVRAM and then install the new SD card (D377). 2. Check and reinstall the SD card (D377).

WWW.SERVICE-MANUAL.NET

No.	Type	Details (Symptom, Possible Cause, Troubleshooting Procedures)
878	CTL D	TPM system authentication error
		The system firmware is not authenticated by TPM (security chip).
		▪ Incorrect updating for the system firmware ▪ Defective flash ROM on the controller board 1. Replace the controller board.

No.	Type	Details (Symptom, Possible Cause, Troubleshooting Procedures)
880	CTL D	File format converter error
		The file format converter does not respond.
		▪ Defective file format converter
		1. Replace the file format converter.

⇒

No.	Type	Details (Symptom, Possible Cause, Troubleshooting Procedures)
899	CTL D	Software Error
		A software error occurred in the GW Controller.
		1. Cycle the machine OFF/ON. 2. Update the controller firmware. 3. Controller board is defective.

WWW.SERVICE-MANUAL.NET

6.1.10 SERVICE CALL TABLES - 9

SC9xx: Miscellaneous

No.	Type	Details (Symptom, Possible Cause, Troubleshooting Procedures)
900	CTL D	Electric counter error
		Abnormal data in the counters.
		▪ Defective NVRAM ▪ Defective controller
		1. Check the connection between the NVRAM and controller. 2. Replace the NVRAM. 3. Replace the controller.

No.	Type	Details (Symptom, Possible Cause, Troubleshooting Procedures)
910	CTL D	External Controller Error 1
911		External Controller Error 2
912		External Controller Error 3
913		External Controller Error 4
914		External Controller Error 5
-	-	The external controller alerted the machine about an error.
-	-	▪ Please refer to the instructions for the external controller (application).

WWW.SERVICE-MANUAL.NET

No.	Type	Details (Symptom, Possible Cause, Troubleshooting Procedures)
919	CTL D	External Controller Error 6
		While EAC (External Application Converter), the conversion module, was operating normally, the receipt of a power line interrupt signal from the FLUTE serial driver was detected, or BREAK signal from the other station was detected.
		▪ Power outage at the EFI controller ▪ EFI controller was rebooted ▪ Connection to EFI controller loose

No.	Type	Details (Symptom, Possible Cause, Troubleshooting Procedures)
920	CTL D	Printer application error
		An error is detected in the printer application program.
		▪ Defective software ▪ Unexpected hardware resource (e.g., memory shortage)
		1. Software defective; switch off/on, or change the controller firmware if the problem is not solved 2. Insufficient memory

No.	Type	Details (Symptom, Possible Cause, Troubleshooting Procedures)
921	CTL D	Printer font error
		A necessary font is not found in the SD card.
		▪ A necessary font is not found in the SD card. ▪ The SD card data is corrupted.
		1. Check that the SD card has the correct data.

WWW.SERVICE-MANUAL.NET

No.	Type	Details (Symptom, Possible Cause, Troubleshooting Procedures)
990	CTL D	Software performance error
		The software makes an unexpected operation.
		▪ Defective software ▪ Defective controller ▪ Software error
		1. Turn the main switch off and on. 2. Reinstall the controller and/or engine main firmware.
		Note ▪ See Note 1 at the end of the SC table.

No.	Type	Details (Symptom, Possible Cause, Troubleshooting Procedures)
991	CTL C	Software continuity error
		The software has attempted to perform an unexpected operation. However, unlike SC 990, the object of the error is continuity of the software.
		▪ Software program error ▪ Internal parameter incorrect, insufficient working memory.
		1. This SC is not displayed on the LCD (logging only).

No.	Type	Details (Symptom, Possible Cause, Troubleshooting Procedures)
992	CTL D	Undefined error
		Defective software program
		▪ An error undetectable by any other SC code occurred

WWW.SERVICE-MANUAL.NET

No.	Type	Details (Symptom, Possible Cause, Troubleshooting Procedures)
994	CTL C	Operation panel management records exceeded
		An error occurred because the number of records exceeded the limit for images managed in the service layer of the firmware. This can occur if there if there are too many application screens open on the operation panel.
		▪ No action required because this SC does not interfere with operation of the machine.

No.	Type	Details (Symptom, Possible Cause, Troubleshooting Procedures)
995	D	CPM setting error
-001		▪ Defective BICU ▪ NVRAM Replacement error
		1. Install the previous NVRAM. 2. Input the serial number with SP5811-004, and turn the main power switch off/on.
-002		▪ Defective NVRAM ▪ Defective controller
		1. Update the controller firmware. 2. Install a new NVRAM, and turn off and on the main power switch after SC995-002 has occurred.
-003		▪ Incorrect type controller installed ▪ Defective controller
		1. Replace the controller with the correct type.
-004		▪ Incorrect model controller installed.
		1. Replace the controller with the correct model.

WWW.SERVICE-MANUAL.NET

No.	Type	Details (Symptom, Possible Cause, Troubleshooting Procedures)
997	CTL B	Application function selection error ▪ The application selected by the operation panel key does not start or ends abnormally.
		▪ Software (including the software configuration) defective ▪ An option required by the application (RAM, DIMM, board) is not installed ▪ Nesting of the fax group addresses is too complicated
		1. Check the devices necessary for the application program. If necessary devices have not been installed, install them. 2. Check that application programs are correctly configured. 3. For a fax operation problem, simplify the nesting of the fax group addresses. 4. Take necessary countermeasures specific to the application program. If the logs can be displayed on the operation panel, see the logs.

No.	Type	Details (Symptom, Possible Cause, Troubleshooting Procedures)
998	CTL D	Application start error
		No applications start within 60 seconds after the power is turned on.
		▪ Loose connection of RAM-DIMM, ROM-DIMM ▪ Defective controller ▪ Software problem
		1. Check the setting of SP5875-001. If the setting is set to "1 (OFF)", change it to "0 (OFF)". 2. Check if the RAM-DIMM and ROM-DIMM are correctly connected. 3. Reinstall the controller system firmware. 4. Replace the controller.

WWW.SERVICE-MANUAL.NET

Note 1

If a problem always occurs in a specific condition (for example. printer driver setting, image file), the problem may be caused by a software error. In this case, the following data and information needs to be sent back to your product specialist. Please understand that it may take some time to get a reply on how to solve the problem, because in some cases the design staff in Japan must analyze the data.

- Symptom / Possible Causes / Action taken
- Summary sheet (SP mode "Printer SP", SP1-004 [Print Summary])
- SMC - All (SP5-990-001)
- SMC - Logging (SP5-990-004)
- Printer driver settings used when the problem occurs
- All data displayed on the screen (SC code, error code, and program address where the problem is logged.)
- Image file which causes the problem, if possible

WWW.SERVICE-MANUAL.NET

6.2 PROCESS CONTROL ERROR CONDITIONS

6.2.1 DEVELOPER INITIALIZATION RESULT

SP-3-014-001 (Developer Initialization Result)

No.	Result	Description	Possible Causes/Action
1	Successfully completed	Developer initialization is successfully completed.	-
2	Forced termination	Developer initialization was forcibly terminated.	▪ A cover was opened or the main switch was turned off during the initialization. 1. Do the developer initialization again when done in SP mode. Reinstall the engine main firmware if the result is the same. 2. Turn the main switch off and on when done at unit replacement.
6	Vt error	Vt is more than 0.7V when Vcnt is 4.3V.	1. Make sure that the heat seal on the development unit is not removed. 2. Defective TD sensor
7	Vcnt error 1	Vcnt is less than 4.7V when Vcnt is Vt target ±0.2V.	1. Defective TD sensor 2. Vt target settings are not correct. 3. Toner density error
8	Vcnt error 2	Vt is more than 0.7V when Vcnt is 4.3V and Vcnt is less than 4.7V when Vcnt is Vt target ±0.2V.	1. Make sure that the heat seal on the development unit is not removed. 2. Defective TD sensor
9	Vcnt error 3	Vcnt is less than 4.7V.	1. Make sure that the heat seal on the development unit is not removed 2. Defective TD sensor

WWW.SERVICE-MANUAL.NET

No.	Result	Description	Possible Causes/Action
			3. Vt target settings are not correct. 4. Toner density error

Note

- The machine starts developer initialization after you set “Enable” in SP3-902-005, 006, 007, or 008. Developer initialization automatically resumes when you open and close the front door or turn the main switch off and on if an error other than Error 8 occurs.

WWW.SERVICE-MANUAL.NET

6.2.2 PROCESS CONTROL SELF-CHECK RESULT

Displayed number shows results of each color sensor check.

00000000 = YYCCMMKK

SP3-012-001 to -010 (Process Control Self-check Result)

No.	Result	Description	Possible Causes/Action
11	Successfully completed	Process control self-check successfully completed.	Check the Vsg adjustment. See the "Vsg Adjustment Result" following this table.
41	Vt error	Vt maximum or minimum error is detected.	▪ Defective development unit Vt maximum error and an image is faint: 1. Replace the toner supply pump unit. Vt maximum error and an image is O.K: 1. Replace the development unit. 2. Replace the IOB board. Vt minimum error: 1. Replace the development unit. 2. Replace the IOB board.
53	ID sensor coefficient (K5) detection error	Not enough data can be sampled.	▪ Solid image is not sufficient density: 1. Retry the process control. 2. Replace the ID sensors. 3. Replace the IOB board. ▪ Solid image is O.K. 1. Replace the ID sensors. 2. Replace the IOB board. ▪ ID sensor is dirty: 1. Clean the ID sensors. 2. Retry the process control.

WWW.SERVICE-MANUAL.NET

No.	Result	Description	Possible Causes/Action
54	ID sensor coefficient (K5) maximum/ minimum error	When the K5 is more than the value of SP3-362-003 or less than the value of SP3-362-004, the error 54 is displayed.	▪ ID sensor pattern density is too high or low. ▪ ID sensor or shutter is defective. Same as 53
55	Gamma error: Maximum	Gamma is out of range. 5.0 < Gamma	▪ ID sensor pattern density is too high. ▪ Hardware defective. Same as 53
56	Gamma error: Minimum	Gamma is out of range. Gamma < 0.15	▪ ID sensor pattern density is too low. ▪ Hardware defective. 1. Same as 53 2. Replace the toner supply pump unit.
57	Vk error: Maximum	Vk is out of range. 150 < Vk	▪ ID sensor pattern density is too low. ▪ Hardware defective. Same as 53
58	Vk error: Minimum	Vk is out of range. Vk < –150	▪ ID sensor pattern density is too high. ▪ Background dirty ▪ Hardware defective Same as 53
59	Sampling data error during gamma correction	Not enough data can be sampled during the gamma correction.	▪ ID sensor pattern density is too high or low. ▪ Hardware defective Same as 53
99	Unexpected error	Process control fails.	▪ Power Failure Check the power source.

WWW.SERVICE-MANUAL.NET

Vsg Adjustment Result

SP3-325-001 to -010 (Vsg Adjustment Result)

No.	Result	Description	Possible Causes/Action
1	O.K	Vsg adjustment is correctly done.	-
2	ID sensor adjustment error	Vsg cannot be adjusted within 4.0 ±0.5V.	▪ Dirty ID sensor (toner, dust, or foreign material) ▪ Dirty transfer belt ▪ Scratched image transfer belt ▪ Defective ID sensor ▪ Poor connection ▪ Defective IOB 1. Clean the ID sensor. 2. Check the belt cleaning. Clean or replace the transfer belt. 3. Replace the image transfer belt. 4. Replace the ID sensor. 5. Check the connection. 6. Replace the IOB board.
3	ID sensor output error	ID sensor output is more than "Voffset Threshold" (SP3-324-004)	▪ Defective ID sensor ▪ Poor connection ▪ Defective IOB 1. Replace the ID sensor. 2. Check the connection. 3. Replace the IOB board.
9	Vsg Adjustment error	Vsg adjustment has not been completed.	▪ Other cases Retry SP3-321-010.

WWW.SERVICE-MANUAL.NET

6.2.3 LINE POSITION ADJUSTMENT RESULT

SP2-194-010 to -012 (Line Position Adjustment Result: M, C, Y)

This SP shows the number as a line position adjustment result on the LCD. It shows which color has an error (M, Y or C).

No.	Result	Description	Note
0	Not done	Line position adjustment has not been done.	-
1	Completed successfully	Line position adjustment has correctly been done,	-
2	Cannot detect patterns	ID sensors have not detected the patterns for line position adjustment.	See Note
3	Fewer lines on the pattern than the target	The patterns, which ID sensors have detected, are not enough for line position adjustment.	See Note
4	More lines on the pattern than the target	Not used in this machine.	-
5	Out of the adjustment range	ID sensors have correctly detected the patterns for line position adjustment, but a shift of patterns is out of adjustable range.	See Note
6-9	Not used	-	-

Note

- For details, see the "Troubleshooting Guide - Line Position Adjustment" section.

WWW.SERVICE-MANUAL.NET

6.3 TROUBLESHOOTING GUIDE

6.3.1 IMAGE QUALITY

The following work-flow shows the basic troubleshooting steps for the image quality problems on this product.

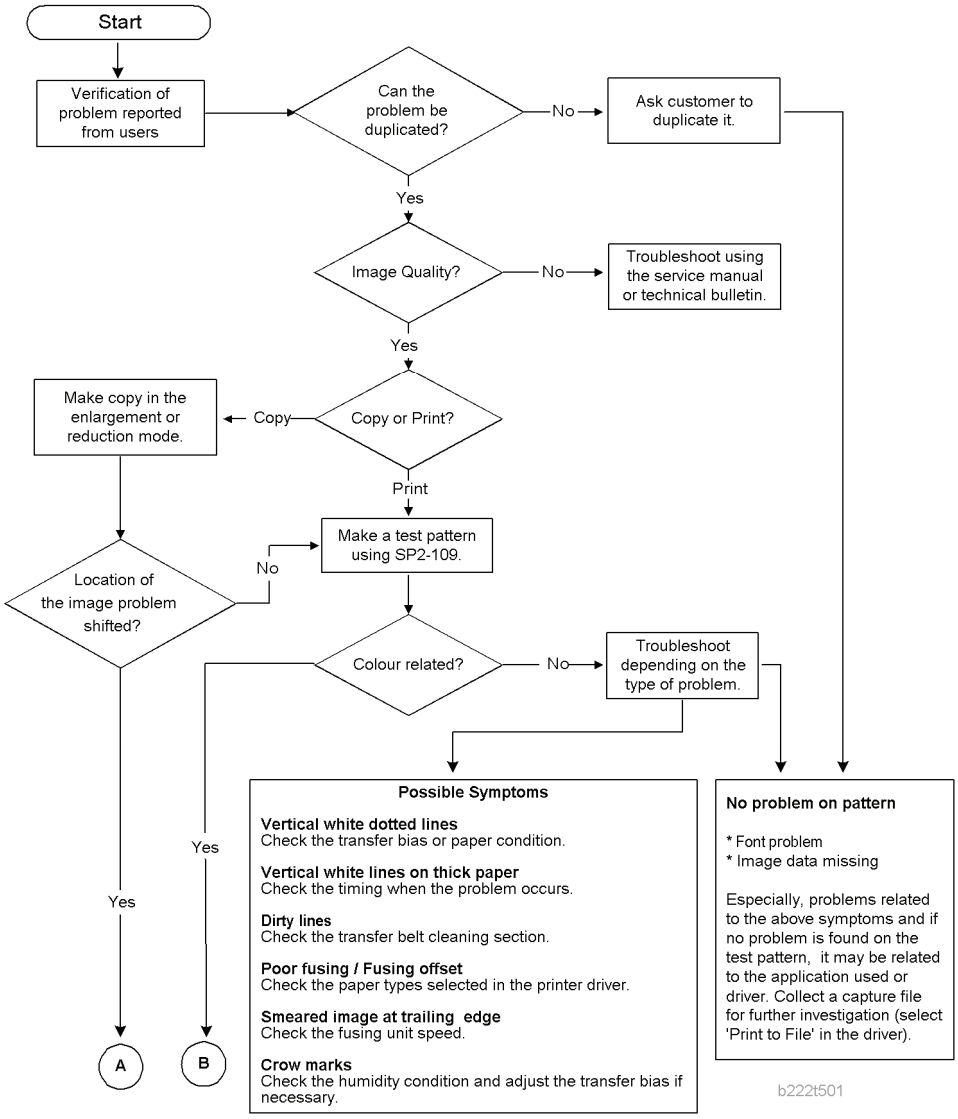

Trouble-shooting

WWW.SERVICE-MANUAL.NET

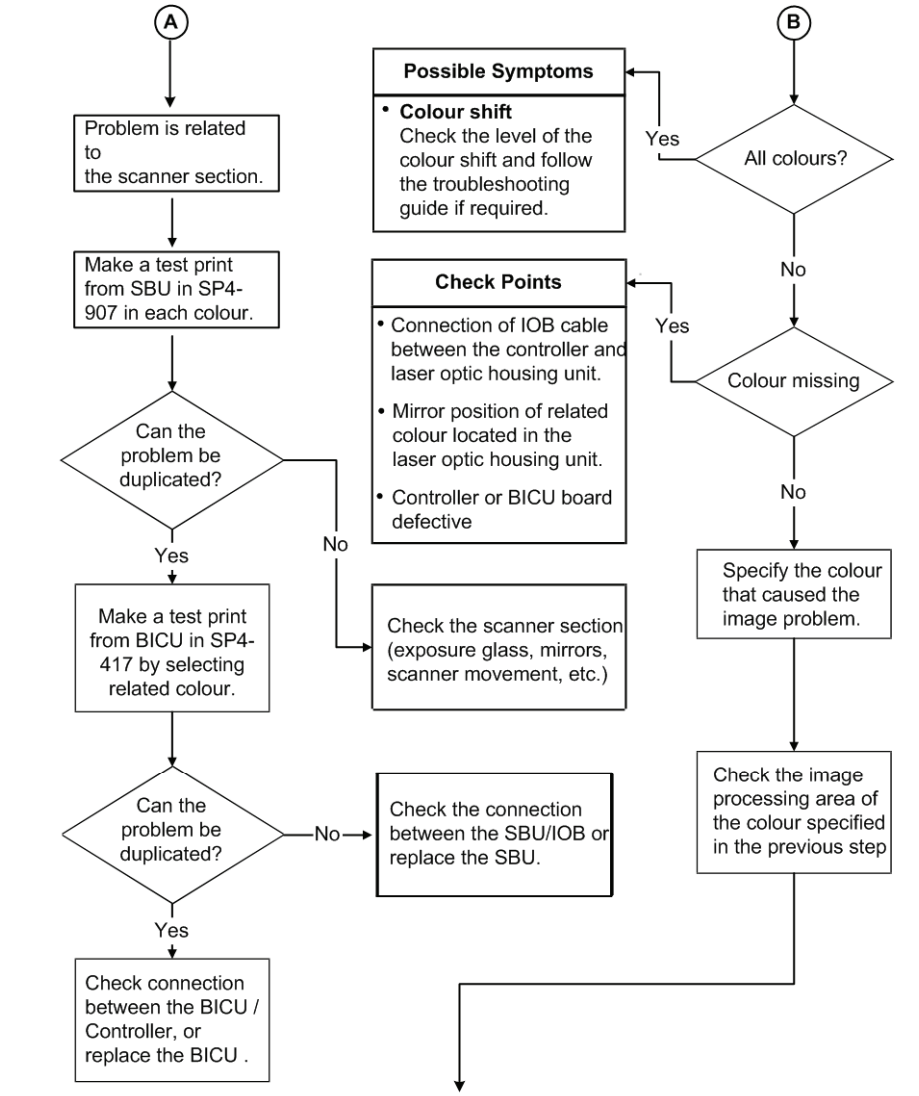

Considerable Symptoms
• **Toner blasting** Check which colour is blasting and adjust the toner limit or transfer bias. • **Image density change** Check when the problem is reported and follow the necessary steps. • **Dirty Background** Check in which condition the problem is reported, and follow the required procedure. • **Colour vertical bands/lines/dirty background** Check the OPC drum and/or development unit. • **Colour shift** Check the level of the colour shift and follow the troubleshooting guide if required. • **Colour lines/bands/dirty background** When the PCU/development unit is close to its life end, the developer or the cleaning blade of the PCU wears out, causing vertical colour lines, bands, or dirty background. Check the related colour unit and replace it if necessary.

d027t504

6.3.2 LINE POSITION ADJUSTMENT

When there are color registration errors on the output, do the line position adjustment as follows.

Note

WWW.SERVICE-MANUAL.NET

- Use A3/DLT size paper for this adjustment.

Test

1. Do SP2-111-003 (Mode c: rough adjustment).
2. Use SP2-194-007 to check if the result of the line position adjustment is correct (0: Completed successfully, 1: Not completed). If the result is "1", refer to ‘Countermeasure list for color registration errors’.
3. Do SP2-111-001 (Mode a: fine adjustment twice).
4. Use SP2-194-007 to check if the result of the line position adjustment is correct (0: Completed successfully, 1: Not completed). If the result is "1", refer to ‘Countermeasure list for color registration errors’.
5. Put some A3/DLT paper on the by-pass tray.

   Note

   - When you print a test pattern, use the by-pass tray to feed the paper.
6. Print out test pattern "7" with SP2-109-003.
7. Check the printed output with a loupe.
8. If there are no color registration errors on the output, the line position adjustment is correctly done. If not, refer to the countermeasure list for color registration errors.

WWW.SERVICE-MANUAL.NET

Countermeasure list for color registration errors

After Executing SP2-111-003

- Result: "1" in SP2-194-007
- Result: "2" or "3" (Line pattern detection failure) in SP2-194-010, -011, -012

Test pattern check	Possible cause/Countermeasure
White image, Abnormal image, Low density	▪ Defective laser optics housing unit shutter ▪ Defective image processing unit ▪ Low density of test pattern ▪ Defective BICU 1. Replace the shutter motor. 2. Replace the high voltage power supply unit. 3. Do the forced process control (SP3-011-001) or supply some toner (SP3-015-xxx). 4. Replace the BICU.
Normal image, but with color registration errors	▪ Defective ID sensor shutter ▪ Defective ID sensor ▪ Defective BICU 1. Replace the ID sensor shutter solenoid. 2. Replace the ID sensor. 3. Replace the BICU.

After Executing SP2-111-003

- Result: "1" in SP2-194-007
- One of results: "5" (Out of adjustable range) in SP2-194-010, -011, -012.

Test pattern check	Possible cause/Countermeasure
The main scan registrations of M, C, Y are shifted by more than ±15 mm from the main scan registration of K.	▪ Defective laser optics housing unit ▪ Defective BICU 1. Replace the laser optics housing unit. 2. Replace the BICU.
The sub scan registrations of M, C, Y are shifted by more than ±20 mm from the sub scan	▪ Defective image transfer belt ▪ Defective drive units ▪ Defective BICU

WWW.SERVICE-MANUAL.NET

Test pattern check	Possible cause/Countermeasure
registration of K.	1. Replace the image transfer belt. 2. Replace the drum motor. 3. Replace the BICU.
The main scan registration is shifted by more than ±0.66 mm, but only at the central area of the image on the output.	▪ Defective ID sensor at center ▪ Deformed center area on the image transfer belt ▪ Defective BICU 1. Replace the ID sensor. 2. Replace the image transfer belt. 3. Replace the BICU.
The skew for M, C, Y is more than ±0.75 mm from the main scan registration of K	▪ Defective PCDU ▪ Defective laser optics housing unit ▪ Defective BICU 1. Reinstall or replace the PCDU. 2. Replace the laser optics housing unit. 3. Replace the BICU.
Others	▪ Skew correction upper limit error ▪ Defective BICU ▪ Defective laser optics housing unit 1. Replace the BICU. 2. Replace the laser optics housing unit.

After Executing SP2-111-003

- Result: "1" in SP2-194-007
- Result: "0" in SP2-194-010, -011, -012.

Test pattern check	Possible cause/Countermeasure
	Do SP2-111-001 or -002.

After Executing SP2-111-001

- Result: "1" in SP2-194-007
- Result: "2" or "3" (Line pattern detection failure) in SP2-194-010, -011, -012

WWW.SERVICE-MANUAL.NET

Test pattern check	Possible cause/Countermeasure
White image, Abnormal image, Low density	▪ Defective laser optics housing unit shutter ▪ Defective image processing unit ▪ Low density of test pattern ▪ Defective BICU 1. Replace the shutter motor. 2. Replace the high voltage power supply unit. 3. Do the forced process control (SP3-011-001) or supply some toner (SP3-015-xxx). 4. Replace the BICU.
Normal image, but with color registration errors	▪ Defective ID sensor shutter ▪ Defective ID sensor ▪ Defective BICU 1. Replace the ID sensor shutter solenoid. 2. Replace the ID sensor. 3. Replace the BICU.

After Executing SP2-111-001

- Result: "1" in SP2-194-007
- Result: "5" (Out of adjustable range) in SP2-194-010, -011, -012

Test pattern check	Possible cause/Countermeasure
Low image density on the output	▪ Low pattern density Do the forced process control (SP3-011-001) or supply some toner (SP3-015-xxx).
The main scan registrations of M, C, Y are shifted by more than ±1.4 mm from the main scan registration of K.	▪ No defective component ▪ Defective laser optics housing unit ▪ Defective BICU 1. Do SP2-111-003 again. 2. Replace the laser optics housing unit. 3. Replace the BICU.
The sub scan registrations of M, C, Y are shifted by more than	▪ No defective component ▪ Defective image transfer belt

WWW.SERVICE-MANUAL.NET

Test pattern check	Possible cause/Countermeasure
±1.4mm from the sub scan registration of K.	▪ Defective drive units ▪ Defective BICU 1. Do SP2-111-003 again. 2. Replace the image transfer belt. 3. Replace the drum motor. 4. Replace the BICU.
The main scan registration is shifted by more than ±0.66 mm, but only at the central area of the image on the output.	▪ Defective ID sensor at center ▪ Deformed center area on the image transfer belt ▪ Defective BICU 1. Replace the ID sensor. 2. Replace the image transfer belt. 3. Replace the BICU.
The skew for M, C, Y is more than ± 0.75 mm from the main scan registration of K. – at the end of the scan line?	▪ Defective PCDU ▪ Defective laser optics housing unit ▪ Defective BICU 1. Reinstall or replace the PCDU. 2. Replace the laser optics housing unit. 3. Replace the BICU.
Others	▪ Skew correction upper limit error ▪ Defective BICU ▪ Defective laser optics housing unit 1. Replace the BICU. 2. Replace the laser optics housing unit.

After Executing SP2-111-001

- Result: "0" in SP2-194-007
- Result: No color registration errors in SP2-194-010, -011, -012

WWW.SERVICE-MANUAL.NET

Test pattern check	Possible cause/Countermeasure
The main scan registration of K is shifted.	▪ Abnormal SP setting value of main scan: K Adjust the value with SP2-101-001.
The main scan length of K is shifted.	▪ Abnormal SP setting value of main scan length detection: K Adjust the value with SP2-185-001.

After Executing SP2-111-001

- Result: "0" in SP2-194-007
- Result: Color registration errors in SP2-194-010, -011, -012

Test pattern check	Possible cause/Countermeasure
Low image density on the output	▪ Low pattern density Do the forced process control (SP3-011-001) or supply some toner (SP3-015-xxx).
The main scan registration is shifted, but only at the central area of the image on the output.	▪ Defective ID sensor at center ▪ Deformed center area on the image transfer belt ▪ Defective BICU 1. Replace the ID sensor. 2. Replace the image transfer belt. 3. Replace the BICU.
The main scan registrations of M, C, Y are shifted.	▪ Defective laser optics housing unit ▪ Defective ID sensor ▪ Defective BICU ▪ Incorrect SP value 1. Replace the laser optics housing unit. 2. Replace the ID sensor. 3. Replace the BICU. 4. Adjust the value with SP2-182-004 to -021.
The sub scan registrations of M, C, Y are shifted.	▪ Defective image transfer belt ▪ Defective drive units ▪ Defective ID sensor ▪ Defective BICU

WWW.SERVICE-MANUAL.NET

Test pattern check	Possible cause/Countermeasure
	▪ Incorrect SP value 1. Replace the image transfer belt. 2. Replace the ID sensor. 3. Replace the drum motor. 4. Replace the BICU. 5. Adjust the value with SP2-182-022 to -039.
The skew of M, C, Y is different.	▪ Defective PCDU ▪ Defective laser optics housing unit ▪ Defective IOB 1. Reinstall or replace the PCDU. 2. Replace the laser optics housing unit. 3. Replace the IOB.
The sub scan lines are shifted. Shifted lines appear cyclically.	▪ Defective PCDU ▪ Defective drive unit ▪ Drum phase adjustment error 1. Do SP1-902-001 (Drum phase adjustment); see Replacement and Adjustment – Drive Unit – Gear Unit for details. 2. Reinstall or replace the PCDU. 3. Check or replace the drive unit.

6.3.3 STAIN ON THE OUTPUTS

If a stain appears at the edge of the output, do the following procedure.

1. Execute the fusing cleaning mode with SP1123-002.

   Note

   - It takes 160 seconds to complete the fusing cleaning mode.

2. Make a sample copy, and then check if a stain appears on the output.

WWW.SERVICE-MANUAL.NET

6.3.4 STACK PROBLEM IN THE 1-BIN TRAY

If a stack problem occurs on the 1-bin tray, raise the guide on the 1-bin tray.

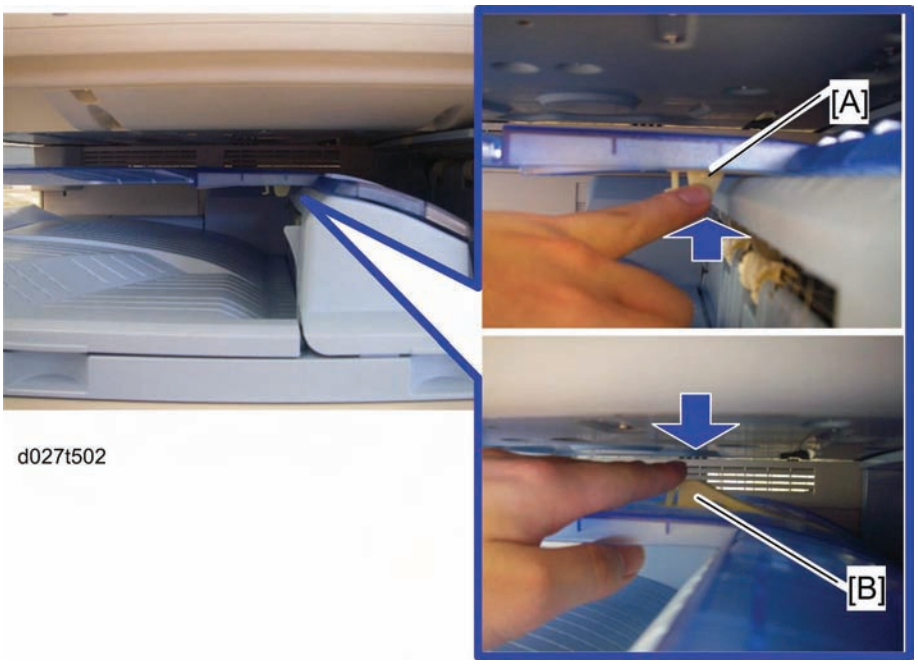

If a stack problem occurs;

- Push the guide to lift the guide [A].

If another type or size of paper is used;

- Press down the guide [B].

WWW.SERVICE-MANUAL.NET

6.3.5 PROBLEM AT REGULAR INTERVALS

Image problems may appear at regular intervals that depend on the circumference of certain components.

The following diagram shows the possible symptoms (black or white dots at regular intervals).

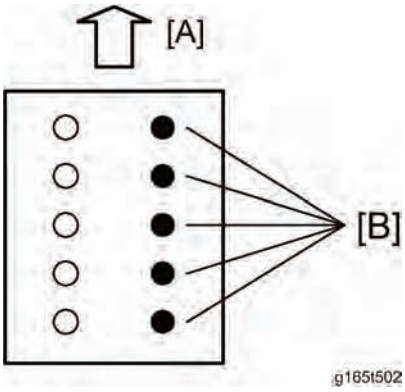

[A]: Paper feed direction

[B]: Problems at regular intervals

- Colored spots at 47-mm intervals: Development roller
- Abnormal image at 51-mm intervals: ITB drive or bias roller
- Abnormal image at 85-mm intervals: Paper transfer roller
- Colored spots at 119-mm intervals: Drum roller
- Abnormal image at 126-mm intervals: Fusing unit (Heating roller or Pressure roller)

6.3.6 TONER END RECOVERY ERROR

If the toner end message on the LCD is displayed in the following conditions, there are some possible causes. Check the machine referring to the flow chart for the toner end recovery error.

- After a new toner bottle has been installed in the machine
- When a displayed color toner bottle still has toner inside

WWW.SERVICE-MANUAL.NET

Flow Chart for the Toner End Recovery Error

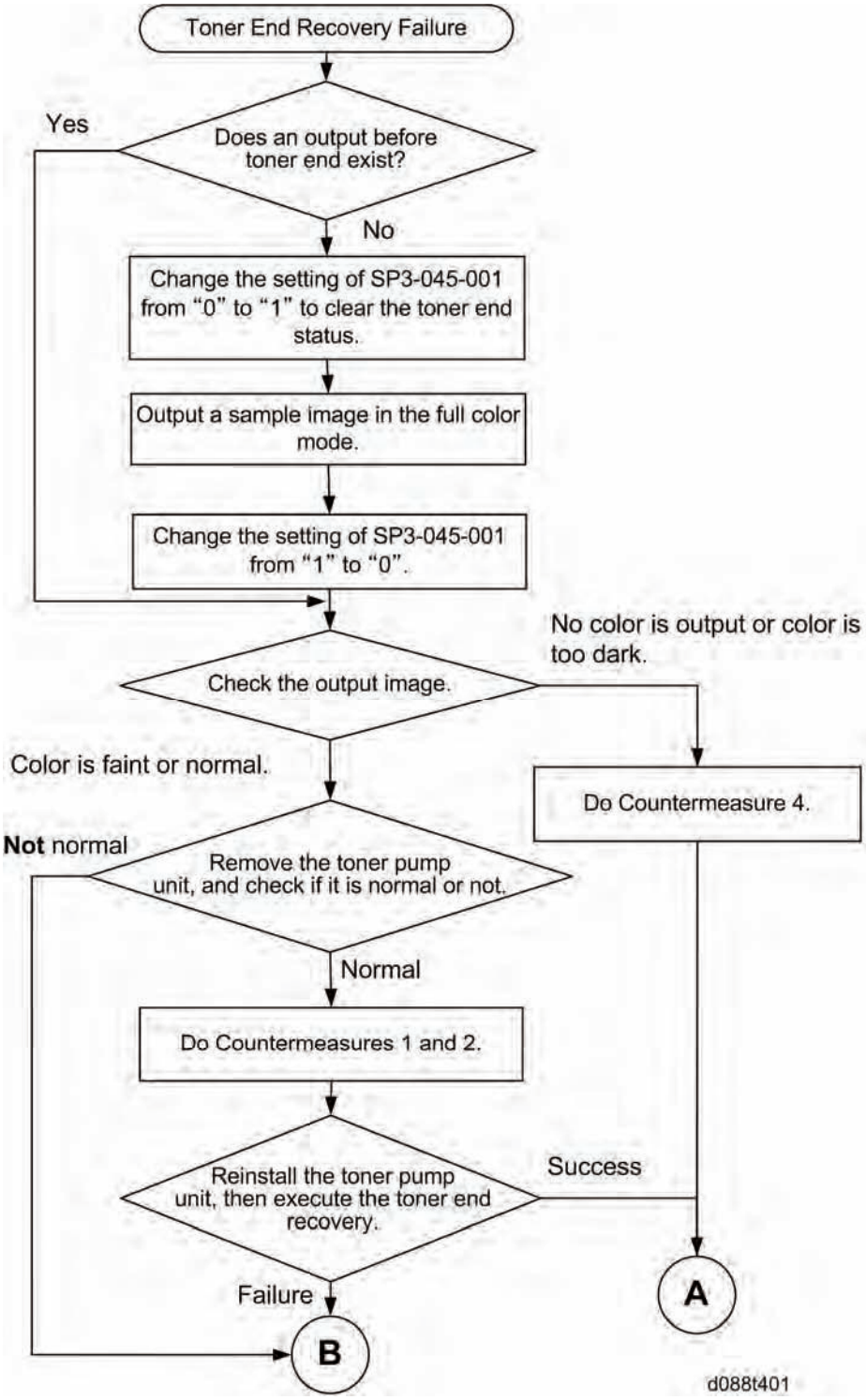

WWW.SERVICE-MANUAL.NET

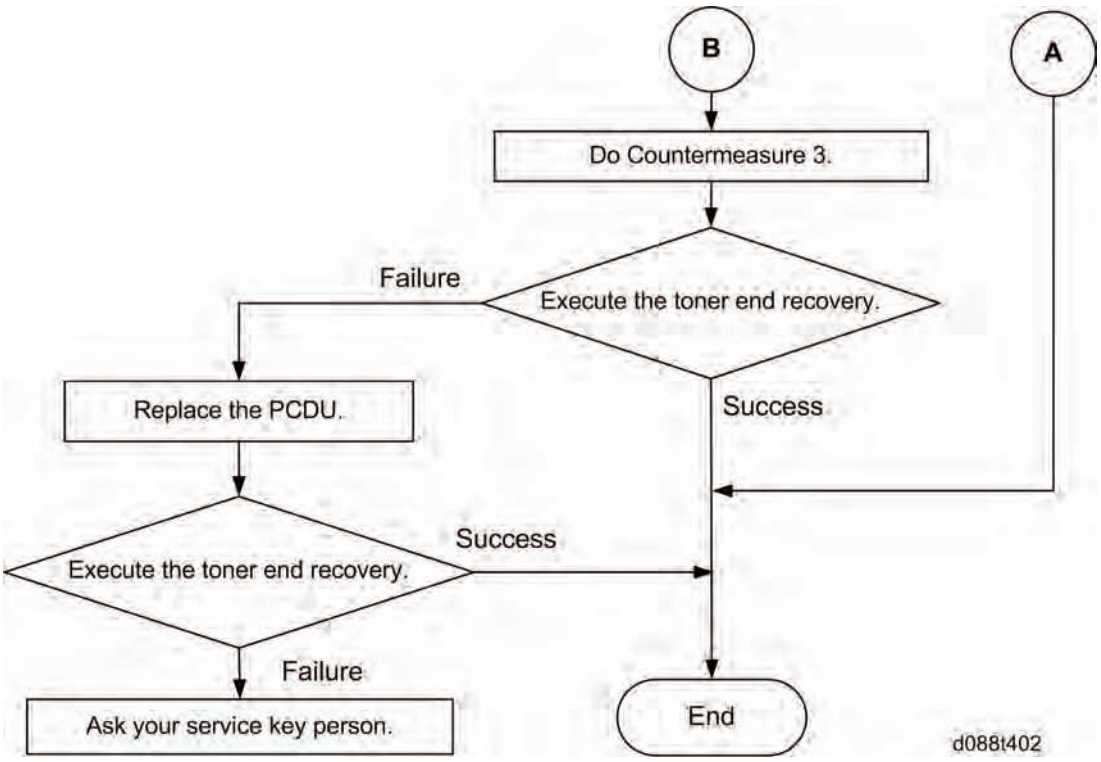

Countermeasure 1

1. Check if the toner supply tube is bent or disconnected.
2. Straighten the toner supply tube or connect it correctly.

Countermeasure 2

1. Remove the target color toner bottle.
2. Disconnect the toner supply tube from the toner pump unit.
3. Remove the blocked toner in the toner supply tube with a vacuum cleaner.

Countermeasure 3

- Replace the toner pump unit (☛ Toner Pump Unit).

Countermeasure 4

- Replace the PCDU (☛ PCDU).

WWW.SERVICE-MANUAL.NET

6.3.7 SOLID IMAGE OR HALFTONE IMAGE ERROR

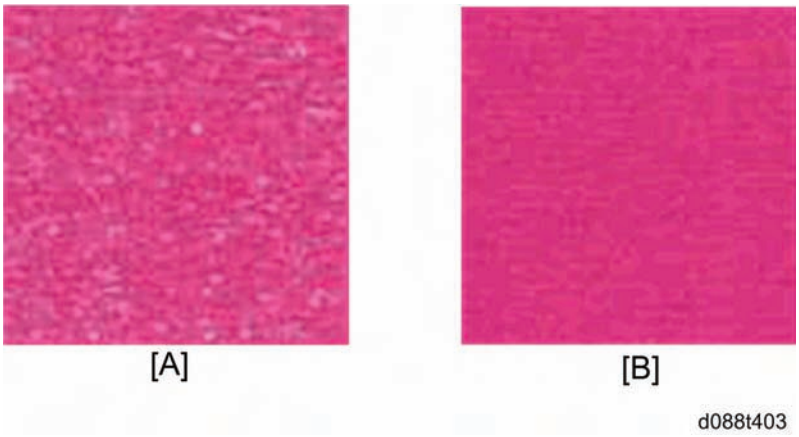

The toner density of a solid image or halftone image may not be uniform ([A]: problem output, [B]: normal output) if a large amount of sheets is printed at low coverage. If this occurs, follow the countermeasure below.

Recovery Procedure

1. Enter the SP mode.
2. Set SP3-044-xxx (Toner Supply Type) to "1: PID (Vref Fixed)".
   - Chose a target color SP number from -001 (Bk), -002 (Magenta), -003 (Cyan), and -004 (Yellow).
3. Set SP3-222-xxx (Vtref: Display/Set) to "4V".
   - Chose a target color SP number from -001 (Bk), -002 (Magenta), -003 (Cyan), and -004 (Yellow).
4. Set SP2-109-003 (Test Pattern; Pattern Selection) to "23: Full Dot Pattern".
5. Set SP2-109-005 (Test Pattern; Color Selection) to "1: All Color (black)", "2: Magenta", "3: Cyan", or "4: Yellow".
   - Chose a target color selection number.
6. Press "Copy Window" on the LCD.
7. Copy 20 sheets for A4 size or 30 sheets for A3 size, and then check the setting of SP3-222-xxx (Vtref: Display/Set).
   - If the setting of this SP is more than 4V, go to next step. If not, copy again until the setting of this SP is more than 4V.
8. Return the setting of SP3-044-xxx (Toner Supply Type) to "4: MBD (Vref_Control)".
   - Return the setting of the SP which you have changed in step 2 before.
9. Execute SP3-015-xxx (Forced Toner Supply: Execute) twice.
   - Chose a target color SP number from -003 (Bk), -004 (Magenta), -005 (Cyan) and -006 (Yellow).
10. Execute the SP3-011-002 (Process Cont. Manual Execution; Density Adjustment).

WWW.SERVICE-MANUAL.NET

Problem Prevention Procedure

- Set the setting of SP3-516-025 (Refresh Mode; Job End Area Coefficient) to "0.5".

6.3.8 FAULTY CLEANING

Black or color lines (2-3mm)

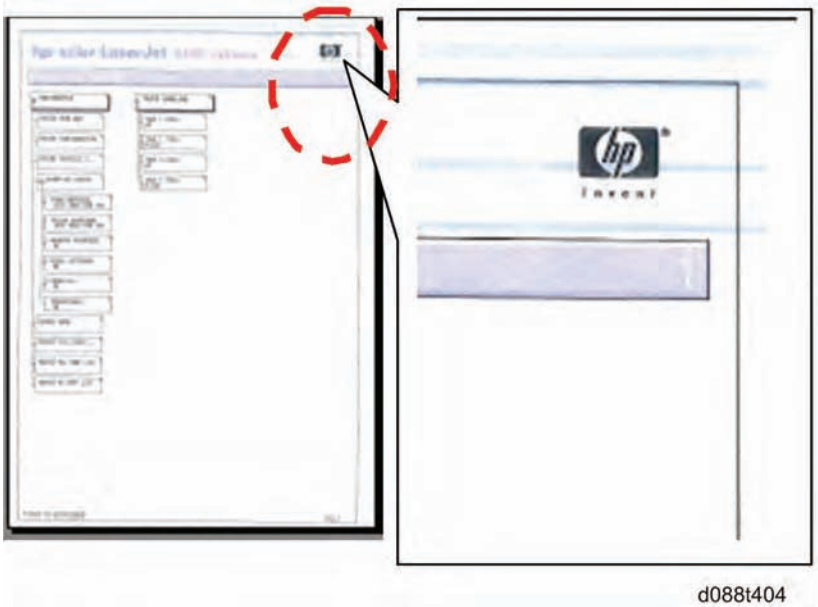

Possible Cause:

Wear of the cleaning blade at a specific point by image creation in the same place many times.

Solution:

Replace the drum unit.

WWW.SERVICE-MANUAL.NET

Band Image Between 20mm and 30mm

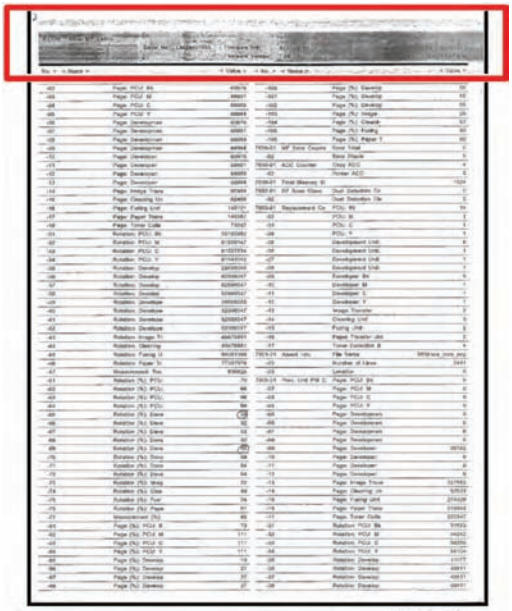

d088t405

Possible Cause:

Developer wear with time

Solution:

Replace the developer or the development unit.

WWW.SERVICE-MANUAL.NET

6.4 JAM DETECTION

6.4.1 PAPER JAM DISPLAY

SP7-507 shows the paper jam history.

```
CODE :011
SIZE   :05h
TOTAL:000034
DATE  :Fri Feb 15 11:44:50 2006
```

- **CODE**: Indicates the jam code.
- **SIZE**: Indicates the paper Size Code.
- **TOTAL**: Indicates the total counter (SP7-502-001).
- **DATE**: indicates the date when the jam occurred.

6.4.2 JAM CODES AND DISPLAY CODES

SP7-504 shows how many jams occurred at each location.

Jam Code SP	Display	Description	LCD Display
7504 3	Tray 1: ON	Paper is not fed from tray 1.	A
7504 4	Tray 2: ON	Paper is not fed from tray 2.	A
7504 5	Tray 3: ON	Paper is not fed from tray 3 (LCT).	Y
7504 6	Tray 4: ON	Paper is not fed from tray 4.	Y
7504 7	LCT: ON	Paper is not fed from LCT.	U
7504 8	Bypass: ON	Paper is not fed from the by-pass tray.	A
7504 9	Duplex: ON	Paper is jammed at the duplex unit.	Z
7504 10	-	-	-
7504 11	Vertical Transport 1: ON	Vertical transport sensor 1 does not detect paper from tray 1.	A
7504 12	Vertical Transport 2: ON	Vertical transport sensor 2 does not detect paper from tray 2.	A

WWW.SERVICE-MANUAL.NET

Jam Code SP	Display	Description	LCD Display
7504 13	Bank Transport 1	Vertical transport sensor 1 or relay sensor does not detect paper from tray 3 (LCT).	Y
7504 15	-	-	-
7504 16	-	-	-
7504 17	Registration: ON	Registration sensor does not detect paper.	B
7504 18	Fusing Entrance: ON	Fusing entrance sensor does not detect paper.	B
7504 19	Fusing Exit: ON	Fusing exit sensor does not detect paper.	B
7504 20	Paper Exit: ON	Paper exit sensor does not detect paper.	C
7504 21	Relay Exit: ON	Tray exit sensor (bridge unit) does not detect paper.	D
7504 22	Relay Transport: ON	Relay sensor (bridge unit) does not detect paper.	D
7504 23	-	-	-
7504 24	Junction Gate Feed: ON	Junction gate jam sensor does not detect paper.	C
7504 25	Duplex Exit: ON	Duplex exit sensor does not detect paper.	Z
7504 26	Duplex Entrance: ON (In)	Duplex entrance sensor does not detect paper.	Z

WWW.SERVICE-MANUAL.NET

Jam Code SP	Display	Description	LCD Display
7504 27	Duplex Entrance: ON (Out)	Duplex entrance sensor does not detect paper again after paper has passed this sensor.	Z
7504 28	-	-	-
7504 51	SEF Sensor 1	Vertical transport sensor 1 does not turn off.	A
7504 52	SEF Sensor 2	Vertical transport sensor 2 does not turn off.	A
7504 53	Bank SEF Sensor 1	Vertical transport sensor or relay sensor 1 does not turn off.	Y
7504 54	Bank SEF Sensor 2	Vertical transport sensor 2 does not turn off.	Y
7504 55	-	-	-
7504 56	-	-	-
7504 57	Regist Sensor	Registration sensor does not turn off.	B
7504 58	LCT Sensor	LCT sensor does not turn off.	U
7504 59	-	-	-
7504 60	Exit Sensor	Paper exit sensor does not turn off.	C
7504 61	Relay Exit Sensor	Tray exit sensor (bridge unit) does not turn off.	D
7504 62	Relay Sensor	Relay sensor (bridge unit) does not turn off.	D
7504 63	-	-	-

WWW.SERVICE-MANUAL.NET

Jam Code SP	Display	Description	LCD Display
7504 64	Junction Gate Feed: OFF	Junction gate jam sensor does not turn off.	C
7504 65	Duplex Exit Sensor	Duplex exit sensor does not turn off.	Z
7504 66	Duplex Entrance: OFF (In)	Duplex entrance sensor does not turn off.	Z
7504 67	Duplex Entrance: OFF (Out)	Duplex entrance sensor does not turn off after paper has passed this sensor.	Z
7504 68	-	-	-
7504 100	Finisher Entrance (B408)	Paper does not reach to the entrance sensor or stay at the entrance sensor.	R1-R2
7504 101	Finisher Shift Tray Exit (B408)	Paper does not reach to the lower tray exit sensor or stay at the lower tray exit sensor.	R1-R2
7504 102	Finisher Staple (B408)	Paper does not reach to the staple tray entrance sensor or stay at the staple tray entrance sensor.	R3-R5
7504 103	Finisher Exit (B408)	Lower tray exit sensor does not detect paper after the stack feed-out belt has fed paper. Lower tray exit sensor still detects paper after the stack feed-out belt has returned to the home position.	R3-R5
7504 104	-	-	-

WWW.SERVICE-MANUAL.NET

Jam Code SP	Display	Description	LCD Display
7504 105	Finisher Tray Lift Motor (B408)	Stack height sensor does not detect paper after the lower tray has lifted up. Stack height sensor still detects paper after the lower tray has lifted down.	R1-R2
7504 106	Finisher Jogger Motor (B408)	Jogger fence HP sensor does not turn off after the jogger fence has moved from its home position. Jogger fence HP sensor does not turn on after the jogger fence has returned to its home position.	R3-R5
7504 107	Finisher Shift Motor (B408)	Shift roller HP sensor does not turn off after the shift roller has moved from its home position. Shift roller HP sensor does not turn on after the shift roller has returned to its home position.	R1-R2
7504 108	Finisher Staple Motor (B408)	Stapler HP sensor does not turn off after the stapler has moved from its home position. Stapler HP sensor does not turn on after the stapler has returned to its home position.	R3-R5
7504 109	Finisher Exit Motor (B408)	Stack feed-out belt HP sensor does not turn off after the stack feed-out belt has moved from its home position. Stack feed-out belt HP sensor does not turn on after the stack feed-out belt has returned to its home position.	R3-R5
7504 191	Finisher Entrance: EUP (B804/B805)	Paper does not reach the finisher entrance sensor or stays at the finisher entrance sensor.	R1-R4

WWW.SERVICE-MANUAL.NET

Jam Code SP	Display	Description	LCD Display
7504 192	Finisher Proof Exit: EUP (B804/B805)	Paper does not reach the proof tray exit sensor or stays at the proof tray exit sensor.	R1-R4
7504 193	Finisher Shift Tray Exit: EUP (B804/B805)	Paper does not reach the upper tray exit sensor or stays at the upper tray exit sensor.	R1-R4
7504 194	Finisher Stapler Exit: EUP (B804/B805)	Stapling tray paper sensor does not turn on after the finisher entrance sensor has turned on. Stapling tray paper sensor does not turn off after it has turned on.	R5-R7
7504 195	Finisher Exit: EUP (B804/B805)	Upper tray exit sensor does not turn on while the stack feed-out belt is turned on. Upper tray exit sensor does not turn off after the stack feed-out belt has returned to its home position.	R8-R12
7504 196	-	-	-
7504 197	-	-	-
7504 198	Finisher Folder: EUP (B804 only)	Fold bottom fence HP sensor does not turn on after the fold roller motor has stopped. Fold unit exit sensor does not turn on after the fold rollers have stopped. Fold unit exit sensor does not turn off after the fold rollers have stopped.	R8-R12

WWW.SERVICE-MANUAL.NET

Jam Code SP	Display	Description	LCD Display
7504 199	Finisher Tray Motor: EUP (B804/B805)	Upper tray limit sensor does not turn on after the upper tray has lifted up. Upper tray limit sensor does not turn off after the upper tray has moved down.	R1-R4
7504 200	Finisher Jogger Motor: EUP (B804/B805)	Jogger fence HP sensor does not turn on/off after the jogger motor has turned on. Stack feed out belt HP sensor does not turn on/off after the feed out belt motor has turned on.	R8-R12
7504 201	Finisher Shift Motor: EUP (B804/B805)	Shift roller HP sensor does not turn on/off after the shift roller motor has turned on. Exit guide plate HP sensor does not turn on/off after the exit guide plate motor has turned on. Stacking roller HP sensor does not turn on/off after the stacking sponge roller motor has turned on.	R1-R4
7504 202	Finisher Staple Moving Motor: EUP (B804/B805)	Corner stapler HP sensor does not turn on/off after the corner stapler movement motor has turned on. Stapler rotation HP sensor does not turn on/off after the corner stapler rotation motor has turned on.	R8-R12
7504 203	Finisher Staple Motor: EUP (B804/B805)	Corner stapler does not finish stapling after a specified time. Booklet stapler does not finish stapling after a specified time.	R8-R12

WWW.SERVICE-MANUAL.NET

Jam Code SP	Display	Description	LCD Display
7504 204	Finisher Folder Motor: EUP (B804 only)	Fold plate HP sensor does not turn on/off after the fold plate motor has turned on. Clamp roller HP sensor does not turn on/off after the clamp roller retraction motor has turned on. Fold bottom fence HP sensor does not turn on/off after the fold unit bottom fence lift motor has turned on. Stack junction gate HP sensor does not turn on/off after the stack junction gate motor has turned on.	R8-R12
7504 205	-	-	-
7504 206	Finisher Punch Motor: EUP (B804/B805)	Punch encoder sensor does not turn on/off after the punch drive motor has turned on. Punch movement HP sensor does not turn on/off after the punch movement motor has turned on. Paper position slide HP sensor does not turn on/off after the paper position sensor slide motor has turned on.	R1-R4

WWW.SERVICE-MANUAL.NET

Paper Size Code

Size Code	Paper Size	Size Code	Paper Size
05	A4 LEF	141	B4 SEF
06	A5 LEF	142	B5 SEF
14	B5 LEF	160	DLT SEF
38	LT LEF	164	LG SEF
44	HLT LEF	166	LT SEF
132	A3 SEF	172	HLT SEF
133	A4 SEF	255	Others
134	A5 SEF	-	-

WWW.SERVICE-MANUAL.NET

Sensor Locations

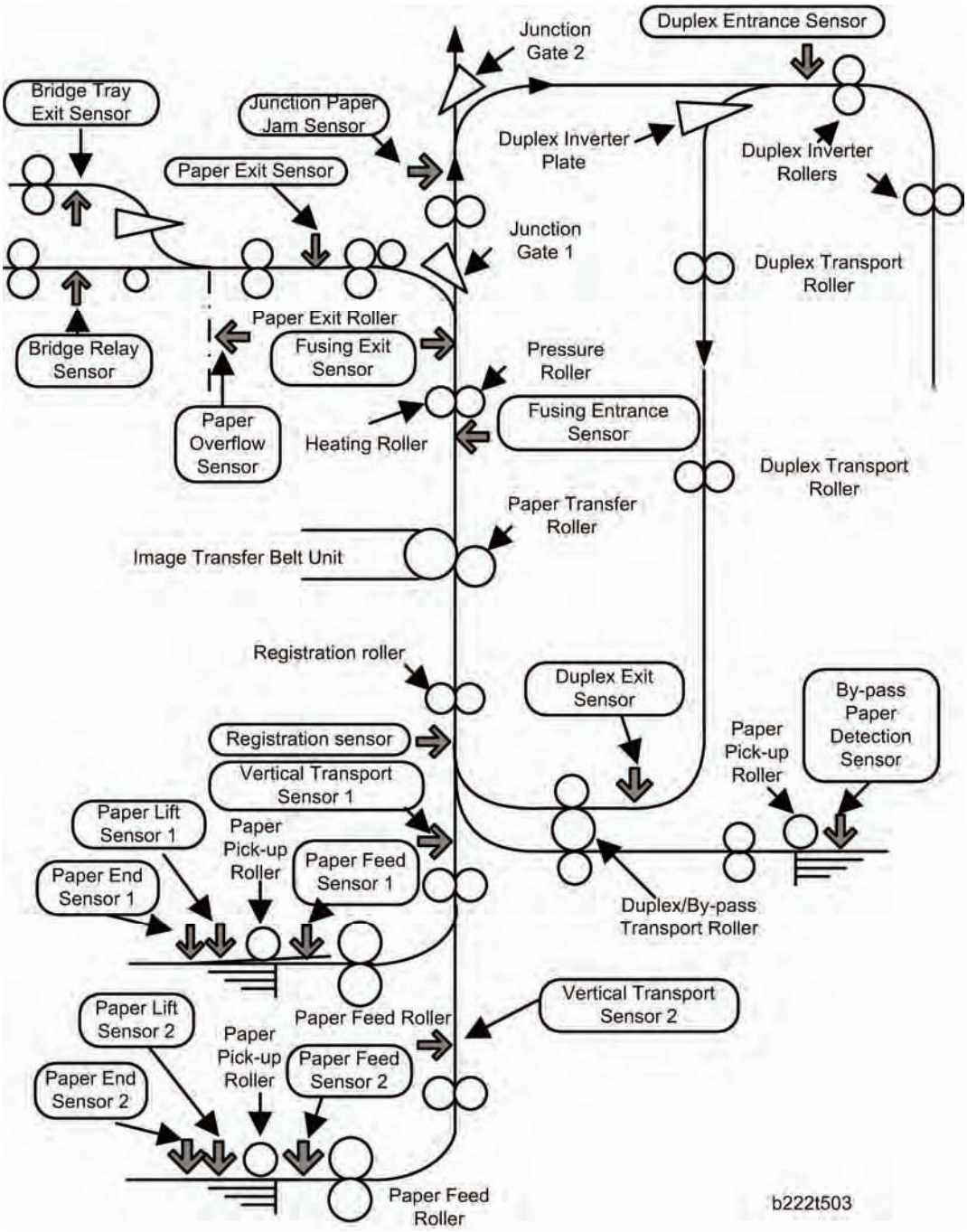

WWW.SERVICE-MANUAL.NET

6.5 ELECTRICAL COMPONENT DEFECTS

6.5.1 SENSORS

Note

- The CN numbers in the following table are the connector numbers on the IOB.

No.	Sensor Name/ Sensor Board Name	Active	CN	Condition	Symptom
SW1	Right Door Open Switch	L	CN204/1	Open	"Open Cover" is displayed.
				Shorted	"Open cover" cannot be detected.
S9	Duplex Door	L	CN232/B9	Open	"Open Cover" is displayed.
				Shorted	"Open cover" cannot be detected.
S1	ID Sensor: M	A	CN211/ 7, 11	Open/ Shorted	SC400
	ID Sensor: C	A	CN211/ 8, 12	Open/ Shorted	
	ID Sensor: Y	A	CN211/ 9, 13	Open/ Shorted	
	ID Sensor: Front	A	CN211/1	Open/ Shorted	SC258
	ID Sensor: Center and K	A	CN211/2	Open/ Shorted	SC400 / SC258
	ID Sensor: Rear	A	CN211/3	Open/ Shorted	SC258

Trouble-shooting

WWW.SERVICE-MANUAL.NET

No.	Sensor Name/ Sensor Board Name	Active	CN	Condition	Symptom
S12	Registration Sensor	L	CN224/A2	Open	Jam A (Jam8, 17)
				Shorted	Jam A, B (Jam1)
S30	Drum Gear Position Sensor-K	H	CN222/A2	Open/ Shorted	SC380/SC396
S31	Drum Gear Position Sensor-M	H	CN222/ A5	Open/ Shorted	SC380/SC397
S32	Drum Gear Position Sensor-C	H	CN222/ A8	Open/ Shorted	SC380/SC398
S33	Drum Gear Position Sensor-Y	H	CN222/ A11	Open/ Shorted	SC380/SC399
S26 S27 S28 S29	Toner End Sensor - K Toner End Sensor - Y Toner End Sensor - C Toner End Sensor - M	L	CN207/A1 CN207/B9 CN207/ B12 CN207/ B15	Open	Toner end cannot be detected.
				Shorted	Toner end is detected when there is enough toner.
S34	Image Transfer Belt Rotation Sensor	H/L	CN208/11	Open/ Shorted	SC443
S19	Vertical Transport Sensor 1	L	CN230/A7	Open	Jam A (Jam3, 11)
				Shorted	Jam A, B (Jam1)
S20 S24	Paper End Sensor 1, 2	L	CN230/ A10, B10	Open	Paper end is not detected when there is no paper in the paper tray.
				Shorted	Paper end is detected when there is paper in the paper tray.
S21	Paper Lift Sensor 1, 2	H	CN230/	Open/	SC501, SC502

WWW.SERVICE-MANUAL.NET

No.	Sensor Name/ Sensor Board Name	Active	CN	Condition	Symptom
S25			A13, B13	Shorted	
S23	Vertical Transport Sensor 2	L	CN230/B7	Open	Jam A (Jam4, 12)
				Shorted	Jam A, B (Jam1)
S14 S15	Tray 1 Paper Height Sensor 1, 2	L	CN224/ B2, B5	Open/ Shorted	Remaining paper volume on the LCD is wrong.
S16 S17	Tray 2 Paper Height Sensor 1, 2	L	CN224/ B10, B13	Open/ Shorted	Remaining paper volume on the LCD is wrong.
S18	Tray 1 Paper Feed Sensor	L	CN230/A4	Open/ Shorted	Jam A, B
S22	Tray 2 Paper Feed Sensor	L	CN230/B4	Open/ Shorted	Jam A, B
SW4	Tray 1 Set Switch	L	CN224/A9	Open	Tray 1 is not detected when tray 1 is set.
				Shorted	Tray 1 is detected when tray 1 is not set.
S11	By-pass Paper Size Sensor	L	CN232/ B16, B17, B19, B20	Open/ Shorted	Paper size error
SW2	By-pass Paper Detection	L	CN232/ A15	Open	Paper on the by-pass tray is not detected when paper is set.
				Shorted	Paper on the by-pass tray is detected when paper is not set.
S10	By-pass Paper Length Sensor	L	CN232/ B12	Open	Paper size error
				Shorted	

Trouble-shooting

WWW.SERVICE-MANUAL.NET

No.	Sensor Name/ Sensor Board Name	Active	CN	Condition	Symptom
S8	Fusing Entrance Sensor	L	CN232/B6	Open	Jam C (Jam 18)
				Shorted	Jam C (Jam 1)
S6	Duplex Entrance Sensor	L	CN232/A8	Open	Jam Z (Jam 26/27)
				Shorted	Jam Z (Jam 1)
S7	Duplex Exit Sensor	L	CN232/ A11	Open	Jam Z (Jam 25)
				Shorted	Jam Z (Jam 1)
S39	TD Sensor - K	A	CN227/A7	Open/ Shorted	SC372
S40	TD Sensor - M	A	CN227/ A15	Open/ Shorted	SC373
S41	TD Sensor - C	A	CN227/B7	Open/ Shorted	SC374
S42	TD Sensor - Y	A	CN227/ B15	Open/ Shorted	SC375
S4	Fusing Exit Sensor	L	CN204/12	Open	Jam C (Jam 19)
				Shorted	Jam C (Jam 1)
S13	Waste Toner Sensor	H	CN224/A5	Open	Waste toner near full indicated when it is not near full.
				Shorted	Waste toner near full cannot be detected when the waste toner bottle is nearly full.
SW3	Waste Toner Bottle Set Switch	L	CN224/A7	Open	Waste toner bottle is not detected when the waste toner bottle is set.

WWW.SERVICE-MANUAL.NET

No.	Sensor Name/ Sensor Board Name	Active	CN	Condition	Symptom
				Shorted	Waste toner bottle is detected when the waste toner bottle is not set.
SW5	Tray 2 Paper Size Switch	L	CN224/ A11, A12, A13, A15	Open/ Shorted	Paper size error
S35	Temperature/ Humidity Sensor	A	CN231/ 25, 27	Open/ Shorted	SC498 Printed image has some problems such as rough image, dirty background, weak image or poor fusing.
S36	Thermopile	A	CN209/16	Open/ Shorted	SC541
TH2	Thermistor - Heating Roller	A	CN212/22	Open/ Shorted	SC551
TH1	Thermistor - Pressure Roller	A	CN212/18	Open/ Shorted	SC561
S3	Paper Exit Sensor	L	CN204/9	Open	Jam C (Jam 20)
				Shorted	Jam C (Jam 1)
S5	Paper Overflow Sensor	L	CN204/15	Open	Paper overflow message is not displayed when the paper overflow condition still remains.
				Shorted	Paper overflow message is displayed when the paper overflow condition does

Trouble-shooting

WWW.SERVICE-MANUAL.NET

No.	Sensor Name/ Sensor Board Name	Active	CN	Condition	Symptom
					not remain.
S45	Original Width Sensor 1	A	CN313/14 SIO	Open/ Shorted	Original paper size cannot be detected.
	Original Width Sensor 2	A	CN313/11 SIO	Open/ Shorted	Original paper size cannot be detected.
S46	Original Length Sensor 1	A	CN313/8 SIO	Open/ Shorted	Original paper size cannot be detected.
	Original Length Sensor 2	A	CN313/5 SIO	Open/ Shorted	Original paper size cannot be detected.
S47	Original Length Sensor 3	A	CN313/2 SIO	Open/ Shorted	Original paper size cannot be detected.
S43	Scanner HP Sensor	H	CN318/2 SIO	Open	SC120
				Shorted	SC121
S44	Platen Cover Sensor	L	CN318/5 SIO	Open/ Shorted	Platen cover open cannot be detected.
S37	Heating Roller Rotation Sensor	H/L	CN210/2	Open/ Shorted	SC584
S38	Pressure Roller HP Sensor	L	CN210/5	Open/ Shorted	SC569
S2	Junction Paper Jam Sensor	L	CN204/6	Open/ Shorted	Jam C (Jam 24/64)

WWW.SERVICE-MANUAL.NET

6.5.2 BLOWN FUSE CONDITIONS

Power Supply Unit

Fuse	Rating		Symptom when turning on the main switch
	115V	220V - 240V	
FU1	15A/125V	8A/250V	No response. (5V power to the PSU is not supplied.)
FU2	10A/125V	6.3A/250V	No response. (5V power to the BICU and controller is not supplied.)
FU3	2A/250V	1A/250V	5V power to the scanner heater and tray heater is not supplied.
FU4	1A/250V	1A/250V	5V power to the SIO and heater is not supplied.
FU5	5A/250V	5A/250V	5V power to the IOB not supplied.
FU6	2A/250V	2A/125V	5VS power to the BICU not supplied.
FU7	10A/125V	10A/125V	24VS power to the IOB not supplied.
FU8	10A/125V	10A/125V	24VS power to the IOB not supplied.
FU9	6.3A/125V	6.3A/125V	24V power to the IOB not supplied.
FU10	6.3A/125V	6.3A/125V	24V power to the SIO not supplied.
FU11	6.3A/125V	6.3A/125V	24V power to the BICU and MB not supplied.
FU12	6.3A/125V	6.3A/125V	24V power to the PFU or LCT not supplied.
FU13	6.3A/125V	6.3A/125V	24V power to the finisher not supplied.
FU14	5A/250V	5A/250V	5V power to the BICU not supplied.

WWW.SERVICE-MANUAL.NET

IH Inverter

Fuse	Rating		Symptom when turning on the main switch
	115V	220V - 240V	
FU1	15A/125V	8A/250V	15V power to the IH coil unit is not supplied. SC689 occurs.
FU2	115°C		No response
FU3	115°C		No response
FU4	1A/250V		15V power to the IH coil unit is not supplied. SC689 occurs.

⚠CAUTION

- For continued protection against risk of fire, replace only with same type and rating of fuse.

WWW.SERVICE-MANUAL.NET

6.6 SCANNER TEST MODE

6.6.1 SBU TEST MODE

Output the SBU test pattern with SP4-807-001 to make sure the scanner SBU control operates correctly. The SBU test pattern prints out after you have set the SP mode settings and pressed the start key.

- The CCD on the SBU board may be defective if the copy is abnormal and the SBU test pattern is normal.
- The followings can be the cause if the copy is normal and the SBU test pattern is abnormal:
  - The harness may not be correctly connected between the SBU and the BICU.
  - The BICU or SBU board may be defective.

WWW.SERVICE-MANUAL.NET

WWW.SERVICE-MANUAL.NET

ENERGY SAVING

REVISION HISTORY		
Page	**Date**	**Added/Updated/New**
		None

WWW.SERVICE-MANUAL.NET

WWW.SERVICE-MANUAL.NET

7. ENERGY SAVING

7.1 ENERGY SAVE

7.1.1 ENERGY SAVER MODES

Customers should use energy saver modes properly, to save energy and protect the environment.

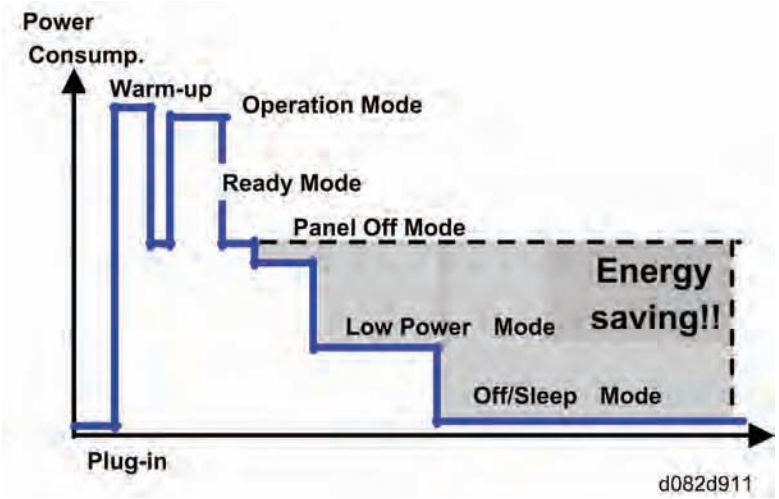

The area shaded grey in this diagram represents the amount of energy that is saved when the timers are at the default settings. If the timers are changed, then the energy saved will be different. For example, if the timers are all set to 240 min., the grey area will disappear, and no energy is saved before 240 min. expires.

Timer Settings

The user can set these timers with User Tools (System settings > Timer setting)

- Panel off timer (10 sec – 240 min): Panel Off Mode. Default setting: 60 sec.
- Energy saver timer (1 – 240 min): Low Power Mode. Default setting: 15 min.
- Auto off timer (1 – 240 min): Off/Sleep Mode. Default setting: 30 min.

Normally, Panel Off timer < Energy Saver timer < Auto Off timer. But, for example, if Auto Off timer < or = Panel Off timer and Energy Saver timer, the machine goes immediately to Off mode when the Auto Off timer expires. It skips the Panel Off and Energy Saver modes.

Example

- Panel off: 1 min.
- Low power: 15 min.
- Auto Off: 1 min.
- The machine goes to Off mode after 1 minute. Panel Off and Low Power modes are not used.

WWW.SERVICE-MANUAL.NET

Return to Stand-by Mode

Low Power Mode

The recovery time depends on the model and the region.

- C2.5c: 10 to 20.7 sec.
- C2.5d: 10 to 32 sec.

Off/Sleep Mode

Recovery time.

- C2.5c: 20 sec.
- C2.5d: 34 sec.

Recommendation

We recommend that the default settings should be kept.

- If the customer requests that these settings should be changed, please explain that their energy costs could increase, and that they should consider the effects on the environment of extra energy use.
- If it is necessary to change the settings, please try to make sure that the Auto Off timer is not too long. Try with a shorter setting first, such as 30 min., then go to a longer one (such as 60 min.) if the customer is not satisfied.
- If the timers are all set to the maximum value, the machine will not begin saving energy until 240 minutes has expired after the last job. This means that after the customer has finished using the machine for the day, energy will be consumed that could otherwise be saved.
- If you change the settings, the energy consumed can be measured using SP8941, as explained below.

WWW.SERVICE-MANUAL.NET

7.1.2 ENERGY SAVE EFFECTIVENESS

SP 8941 (Machine Status) keeps a record of the amount of time that the machine spends in each mode.

- 8941-001: Operating mode
- 8941-002: Standby mode
- 8941-003: Panel off mode
- 8941-004: Low power mode
- 8941-005: Off/sleep mode

With this data, and the power consumption values from the specifications, we can estimate the amount of energy that is used by the machine.

This should only be used as a reference value, because the power consumption specifications are measured in a controlled environment with a constant power supply.

To get an exact measurement at the customers site, a watt meter must be used to measure the actual energy consumed.

To use SP8941 to calculate the energy consumed:

- At the start of the measurement period, read the values of SP8941 001 to 005.
- At the end of the measurement period, read the values of SP8941 001 to 005 again.
- Find the amount of time spent in each mode (subtract the earlier measurement from the later measurement).
- Multiply this by the power consumption spec for each mode.
- Convert the result to kWh (kilowatt hours)

Here is an example calculation.

WWW.SERVICE-MANUAL.NET

Machine Condition	SP8941: Machine Status	Time at Start (min.) ①	Time at End (min.) ②	Running time (hour) (②-①)/60 = ③	Power consumption Spec. (W) ④	Power consumption (KWH) (③x④)/1000 = ⑤
Operating	001: Operating Time	21089.0	21386.0	5.0	1081.8	5.35
② Stand by (Ready)	002: Standby Time	306163.0	308046.0	31.4	214.0	6.72
③ Energy save (Panel off)	003: Energy Save Time	71386.0	75111.0	62.1	214.0	13.29
④ Low power	004: Low Power Time	154084.0	156340.0	37.6	146.0	5.49
⑤ Off/Sleep	005: Off Mode Time	508776.0	520377.0	193.4	7.0	1.35
Total ⑥						32.20

WWW.SERVICE-MANUAL.NET

7.2 PAPER SAVE

7.2.1 EFFECTIVENESS OF DUPLEX/COMBINE FUNCTION

Duplexing and the combine functions reduce the amount of paper used. This means that less energy overall is used for paper production, which improves the environment.

1. Duplex:

Reduce paper volume in half!

d062d102

2. Combine mode:

Reduce paper volume in half!

d062d100

WWW.SERVICE-MANUAL.NET

3. Duplex + Combine:

Using both features together can further reduce paper volume by 3/4!

d062d101

To check the paper consumption, look at the total counter and the duplex counter.

The total counter counts all pages printed.

- For one duplex page, the total counter goes up by 2.
- For a duplex job of a three-page original, the total counter goes up by 3.

The duplex counter counts pages that have images on both sides.

- For one duplex page, the duplex counter goes up by 1.
- For a duplex job of a three-page original, the duplex counter will only increase by 1, even though two sheets are used.

WWW.SERVICE-MANUAL.NET

How to calculate the paper reduction ratio

How to calculate the paper reduction ratio, when compared with Single-sided copying, with no 2-in-1 combine mode

Paper reduction ratio (%) = Number of sheets reduced: A/Number of printed original images: B x 100

- Number of sheets reduced: A
  = Output pages in duplex mode/2 + Number of pages in Single-sided with combine mode + Number of pages in Duplex with combine mode x 3/2
  A = ((2) + (3) + (4))/2 + (5) + (6) x 3/2
- Number of printed original images: B
  = Total counter6 + Number of pages in Single-sided with combine mode + Number of pages in Duplex with combine mode
  B = (1) + (5) + (6)
- (1) Total counter: SP 8581 001 (pages)
- (2) Single-sided with duplex mode: SP 8421 001 (pages)
- (3) Double-sided with duplex mode: SP 8421 002 (pages)
- (4) Book with duplex mode: SP 8421 003 (pages)
- (5) Single-sided with combine mode: SP 8421 004 (pages)
- (6) Duplex with combine mode: SP 8421 005 (pages)

WWW.SERVICE-MANUAL.NET

WWW.SERVICE-MANUAL.NET

RICOH UNIVERSITY
Learning ◆ Knowledge ◆ Performance

D088/D089
SERVICE MANUAL

006189MIU

APPENDIX & ACCESSORIES

LANIER RICOH savin

WWW.SERVICE-MANUAL.NET

WWW.SERVICE-MANUAL.NET

RICOH UNIVERSITY
Learning • Knowledge • Performance

D088/D089
SERVICE MANUAL
(APPENDIX & ACCESSORIES)

LANIER
RICOH
savin

WWW.SERVICE-MANUAL.NET

WWW.SERVICE-MANUAL.NET

RICOH UNIVERSITY
Learning ◆ Knowledge ◆ Performance

D088/D089
SERVICE MANUAL
(APPENDIX & ACCESSORIES)

006189MIU

LANIER RICOH savin

WWW.SERVICE-MANUAL.NET

WWW.SERVICE-MANUAL.NET

It is the reader's responsibility when discussing the information contained within this document to maintain a level of confidentiality that is in the best interest of Ricoh Americas Corporation and its member companies.

NO PART OF THIS DOCUMENT MAY BE REPRODUCED IN ANY FASHION AND DISTRIBUTED WITHOUT THE PRIOR PERMISSION OF RICOH AMERICAS CORPORATION.

All product names, domain names or product illustrations, including desktop images, used in this document are trademarks, registered trademarks or the property of their respective companies.
They are used throughout this book in an informational or editorial fashion only and for the benefit of such companies. No such use, or the use of any trade name, or web site is intended to convey endorsement or other affiliation with Ricoh products.

© 2010 RICOH Americas Corporation. All rights reserved.

WWW.SERVICE-MANUAL.NET

WWW.SERVICE-MANUAL.NET

WARNING

The Service Manual contains information regarding service techniques, procedures, processes and spare parts of office equipment distributed by Ricoh Americas Corporation. Users of this manual should be either service trained or certified by successfully completing a Ricoh Technical Training Program.

Untrained and uncertified users utilizing information contained in this service manual to repair or modify Ricoh equipment risk personal injury, damage to property or loss of warranty protection.

Ricoh Americas Corporation

WWW.SERVICE-MANUAL.NET

WWW.SERVICE-MANUAL.NET

LEGEND

PRODUCT CODE	COMPANY			
	GESTETNER	LANIER	RICOH	SAVIN
D088	MP C4501	LD645C	Aficio MP C4501	C9145
D089	MP C5501	LD655C	Aficio MP C5501	C9155

DOCUMENTATION HISTORY

REV. NO.	DATE	COMMENTS
*	11/2010	Original Printing

WWW.SERVICE-MANUAL.NET

WWW.SERVICE-MANUAL.NET

D088/D089
SERVICE MANUAL APPENDICES

WWW.SERVICE-MANUAL.NET

WWW.SERVICE-MANUAL.NET

D088/D089 APPENDICES

TABLE OF CONTENTS

1. APPENDIX: SPECIFICATIONS 1-1

1.1 GENERAL SPECIFICATIONS 1-1

1.1.1 MAIN FRAME 1-1

1.1.2 PRINTER 1-5

1.1.3 SCANNER 1-7

1.2 SUPPORTED PAPER SIZES 1-8

1.2.1 PAPER FEED 1-8

North America 1-8

Europe/ Asia 1-10

1.2.2 PAPER EXIT 1-12

2000/3000 Sheet Booklet Finisher (B804/B805) 1-12

1000-Sheet Finisher (B408) 1-16

1.2.3 PLATEN/ARDF ORIGINAL SIZE DETECTION 1-18

1.3 SOFTWARE ACCESSORIES 1-20

1.3.1 PRINTER DRIVERS 1-20

1.3.2 SCANNER AND LAN FAX DRIVERS 1-21

1.3.3 UTILITY SOFTWARE 1-22

1.4 OPTIONAL EQUIPMENT 1-23

1.4.1 ARDF (D540) 1-23

1.4.2 PAPER FEED UNIT (D537) 1-24

1.4.3 LCT 2000-SHEET (D538) 1-24

1.4.4 LCT 1200-SHEET (D539) 1-25

1.4.5 3000-SHEET FINISHER (B805) 1-26

1.4.6 2000-SHEET BOOKLET FINISHER (B804) 1-28

1.4.7 PUNCH UNIT (B702) FOR 2000/3000-SHEET (BOOKLET) FINISHER 1-31

1.4.8 1000-SHEET FINISHER (B408) 1-32

Upper Tray 1-32

Lower Tray 1-33

1.4.9 BRIDGE UNIT (D386) 1-34

1.4.10 SHIFT TRAY (D388) 1-34

WWW.SERVICE-MANUAL.NET

1.4.11 1-BIN TRAY UNIT (D536) 1-35

2. APPENDIX: PREVENTIVE MAINTENANCE TABLES 2-1

2.1 MAINTENANCE TABLES 2-1

2.1.1 PREVENTIVE MAINTENANCE ITEMS 2-1

Mainframe 2-1

ARDF (D540) 2-4

Two-tray Paper Feed Unit (D537) 2-4

1200-sheet LCT (D539) 2-5

2000-sheet LCT (D538) 2-5

2000/3000-Sheet (Booklet) Finisher (B804/B805) 2-6

2000/3000-Sheet (Booklet) Finisher Punch Kit (B702) 2-6

1000-Sheet Finisher (B408) 2-6

1 Bin Tray (D536) 2-7

Bridge Unit (D386) 2-7

Shift Tray (D388) 2-7

Side tray (B542) 2-7

2.1.2 OTHER YIELD PARTS 2-8

Mainframe 2-8

ARDF 2-8

3. APPENDIX: SP MODE TABLES 3-1

3.1 SYSTEM SP1-XXX 3-1

3.1.1 SP1-XXX (FEED) 3-1

3.2 SYSTEM SP2-XXX 3-39

3.2.1 SP2-XXX (DRUM) 3-39

3.3 SYSTEM SP3-XXX 3-135

3.3.1 SP3-XXX (PROCESS) 3-135

3.4 SYSTEM SP4-XXX 3-196

3.4.1 SP4-XXX (SCANNER) 3-196

3.5 SYSTEM SP5-XXX 3-231

3.5.1 SP5-XXX (MODE) 3-231

3.6 SYSTEM SP6-XXX 3-314

3.6.1 SP6-XXX (PERIPHERALS) 3-314

3.7 SYSTEM SP7-XXX 3-327

3.7.1 SP7-XXX (DATA LOG) 3-327

3.8 SYSTEM SP8-XXX 3-363

3.8.1 SP8-XXX: DATA LOG2 3-363

3.9 INPUT AND OUTPUT CHECK 3-422

WWW.SERVICE-MANUAL.NET

3.9.1 INPUT CHECK TABLE 3-422
Copier 3-422
Table 1: Paper Height Sensor 3-427
Table 2: Paper Size Switch (Tray 2).....3-428
Table 3: Paper Size (By-pass Table) 3-429
ADF (D540) 3-430
2000/3000-Sheet (Booklet) Finisher (B804, B805) 3-432
1000-Sheet Finisher (B408) 3-435
Bridge Unit (D386)/ Side Tray (D542) 3-436
Internal Shift Tray (D388) 3-436
1 Bin Tray (D536) 3-437
Two-Tray PFU (D537)/ LCIT 2000 (D538)/ LCIT 1200 (D539).....3-437
3.9.2 OUTPUT CHECK TABLE 3-438
Copier 3-438
ARDF (D540) 3-446
1000-Sheet Finisher (B408) 3-447
2000/3000-Sheet (Booklet) Finisher (B804/B805) 3-448
Bridge Unit (D386)/ Side Tray (D542) 3-449
Shift Tray (D388) 3-450
1 Bin Tray (D536) 3-450
Two-Tray PFU (D537)/ LCIT 2000 (D538)/ LCIT 1200 (D539).....3-450
3.10 PRINTER SERVICE MODE 3-452
3.10.1 SP1-XXX (SERVICE MODE) 3-452
3.11 SCANNER SP MODE 3-462
3.11.1 SP1-XXX (SYSTEM AND OTHERS) 3-462
3.11.2 SP2-XXX (SCANNING-IMAGE QUALITY) 3-463
3.12 TEST PATTERN PRINTING 3-464

WWW.SERVICE-MANUAL.NET

WWW.SERVICE-MANUAL.NET

APPENDIX: SPECIFICATIONS

REVISION HISTORY		
Page	**Date**	**Added/Updated/New**
		None

WWW.SERVICE-MANUAL.NET

WWW.SERVICE-MANUAL.NET

1. APPENDIX: SPECIFICATIONS

1.1 GENERAL SPECIFICATIONS

1.1.1 MAIN FRAME

Configuration:	Desktop
Print Process:	Laser beam scanning & Dry electrostatic transfer system 4 drums tandem method
Number of scans:	1
Resolution:	Scan: 600 dpi Print: 600 dpi
Gradation:	Scan: 600dpi / 10bits/pixel Print: 600dpi / 4 bits/pixel
Original type:	Sheets, book, objects
Maximum original size:	A3/11" x 17"
Original reference position:	Left rear corner, ad hoc lists
Copy speed:	**Plain (ADF 1 to 1, LT/ A4 LEF)** C2.5c: 45 cpm (color/black & white) C2.5d: 55 cpm (color/black & white) **Thick 1 (169 g/m^2 or less)** C2.5c: 25 cpm (color/black & white) C2.5d: 25 cpm (color/black & white) **Thick 2 (220 g/m^2 or less)** C2.5c: 17.5 cpm (color/black & white) from Tray C2.5d: 17.5 cpm (color/black & white) from Tray **Thick 3 (256 g/m^2 or less)** C2.5c: 17.5 cpm (color/black & white) from Tray C2.5d: 17.5 cpm (color/black & white) from Tray **Thick 4 (300 g/m^2 or less)** C2.5c: 15 cpm (color/black & white) from By-pass

WWW.SERVICE-MANUAL.NET

	C2.5d: 15 cpm (color/black & white) from By-pass **OHP, Glossy (1200 dpi)** C2.5c: 17.5 cpm (color/black & white) C2.5d: 17.5 cpm (color/black & white)
First copy (normal mode):	C2.5.5c Color: 6.5 seconds or less (A4/LT LEF) Black & white: 3.9 seconds or less (A4/LT LEF) C2.5.5d Color: 5.5 seconds or less (A4/LT LEF) Black & white: 3.5 seconds or less (A4/LT LEF)
Warm-up time:	C2.5c: 26.1 seconds or less (20°C) C2.5d: 40.1 seconds or less (20°C)
Print Paper Capacity: (80 g/m^2, 20 lb)	Standard tray: 550 sheets x 2 By-pass tray: 100 sheets (Normal), 40 sheets (Thick 1: 106 – 169 g/m^2), 20 sheets (Thick 2/3: 170 - 256 g/m^2), 35 sheets (Postcard) Optional paper feed tray: 550 sheets x 2 2000-sheet LCT: 2000 sheets 1200-sheet LCT: 1200 sheets

Print Paper Size:

(Refer to "Supported Paper Sizes".)

-	Minimum	Maximum
Tray 1	A4/8.5" x 11" (LEF)	
Tray 2	A5 (LEF)/ 8.5" x 11"	A3/11" x 17"
By-pass	90 x 148 mm	305 x 600 mm
Optional Tray	A5 (LEF)/ 8.5" x 11"	A3/11" x 17"
2000-sheet LCT	A4/8.5" x 11" (LEF)	
1200-sheet LCT	B5 (LEF)/ 257 x 182mm	A4 (LEF)/ 297 x 210mm

WWW.SERVICE-MANUAL.NET

Printing Paper Weight:	Standard tray: 60 to 256 g/m^2 (16 to 68 lb.) Optional paper tray: 60 to 256 g/m^2 (16 to 68 lb.) By-pass tray: 60 to 300 g/m^2 (16 to 79.8 lb.) Duplex unit: 60 to 169 g/m^2 (16 to 45 lb.) 1200-sheet LCT : 60 to 216 g/m^2 (10 to 571lb)	
Output Paper Capacity:	Standard exit tray: 500 sheets or more (face down)*1 Shift Tray: 250 sheets (80 g/m^2) 1-bin Tray: 125 (80 g/m^2) 1000-sheet finisher 250 + 1000 sheets (80 g/m^2) 2000-sheet booklet finisher: 250 + 2000 sheets (80 g/m^2) 3000-sheet booklet finisher: 250 + 3000 sheets (80 g/m^2) *1: T6200, A4 LEF	
Continuous copy:	Up to 999 sheets	
Zoom:	Arbitrary: From 25 to 400% (1% step)	
	Fixed:	
	North America	Europe
	25%	25%
	50%	50%
	65%	61%
	73%	71%
	78%	82%
	85%	87%
	93%	93%
	100%	100%

WWW.SERVICE-MANUAL.NET

Zoom	121%		115%	
	129%		122%	
	155%		141%	
	200%		200%	
	400%		400%	
Memory:	Standard: 2 GB			
Power Source:	120 V, 60 Hz: More than 12A (for North America) 220 V – 240 V, 50/60 Hz: More than 8A (for Europe/ASIA)			
Power Consumption:	-		120V	220 - 240V
	Maximum		1700 W or less	1584 W or less
	Sleep Mode		2.0 W or less	2.0 W or less
Noise Emission: (Sound Power Level)	Model	State	Mainframe	Complete system (*1)
	C2.5c	Standby	40 dB(A) or Less	49 dB(A) or Less
		Operating	B/W: 71.8 dB(A) or Less	-
			Color: 71.5 dB(A) or Less	Color: 74 dB(A) or Less
	C2.5d	Standby	40 dB(A) or Less	52 dB(A) or Less
		Operating	B/W: 72 dB(A) or Less	-
			Color: 72 dB(A) or Less	Color: 76 dB(A) or Less

WWW.SERVICE-MANUAL.NET

(*1) The complete system consists of mainframe, ARDF, finisher, and LCT. The above measurements were made in accordance with Ricoh standard methodology.	
Dimensions (W x D x H): Copier: 670 x 677 x 760 mm (26.4" x 26.7" x 29.9") Copier + PFU or LCT: 670 x 677 x 1020 mm (26.4" x 26.7" x 40.2")	
Weight:	Less than 135 kg (298 lb.) [with ARDF excluding toner]

1.1.2 PRINTER

Printer Languages:	PCL 6/5c RPCS (Refined Printing Command Stream) Adobe PostScript 3 (optional) PDF Direct (optional) IPDS (optional) PictBridge (optional) MediaPrint: JPEG/TIFF (optional)
Resolution and Gradation:	PCL 5c: 300 x 300 dpi : Available only in B/W mode 600 x 600 dpi : Fast (1 bit), Standard (2 bits), Fine (4 bits) PCL 6: 600 x 600 dpi : Fast (1 bit), Standard (2 bits), Fine (4 bits) / 1200 x 1200 dpi RPCS: 600 x 600 dpi, 1,800 x 600 dpi*, 9600 dpi x 600 dpi* *1,800 x 600 dpi = 600 x 600 dpi (2 bits) *9600 dpi x 600 dpi* = 600 x 600 dpi (4 bits) PS3: 600 x 600 dpi : Fast (1 bit), Standard (2 bits), Fine (4 bits)

WWW.SERVICE-MANUAL.NET

Printing speed:	C2.5c: 45 ppm in Plain/Middle Thick mode 17.5 ppm in Thick/OHP mode (depending on paper type) C2.5d: 55 ppm in Plain mode 25 ppm in Middle Thick mode 17.5 ppm in Thick/OHP mode (depending on paper type)
Resident Fonts:	PCL 6/5c (Standard): 45 Compatible fonts 13 International fonts Adobe PostScript 3 (Optional): 136 fonts (24 Type 2 fonts, 112 Type 14 fonts) IPDS (Optional): 108 fonts
Host Interfaces:	USB2.0 Type A and Type B: Standard Ethernet (100 Base-TX/10 Base-T): Standard Gigabit Ethernet (1000 Base-T): Optional IEEE1284 parallel x 1: Optional IEEE802.11a/g (Wireless LAN): Optional Bluetooth (Wireless): Optional
Network Protocols:	TCP/IP (IPv4, IPv6), IPX/SPX, AppleTalk (Auto Switching)

WWW.SERVICE-MANUAL.NET

1.1.3 SCANNER

Standard Scanner Resolution:	Main scan/Sub scan 600 dpi
Available scanning Resolution Range:	Twain Mode: 100 to1200 dpi Delivery Mode: 100/200/300/400/600 dpi
Grayscales:	1 bit or 8 bits/pixel each for RGB
Scanning Throughput (ARDF mode):	Scan to E-mail / Folder: BW: 67 ipm (A4LEF / BW Text / Line Art / 200dpi /Compression: On (MH)) FC: 67 ipm (A4LEF / FC Text / Photo / 200dpi / Compression: Standard)
Interface:	Ethernet (100 Base-TX/10 Base-T/1000 Base-T for TCP/IP), Wireless LAN, GigaEthernet
Compression Method:	B&W: TIFF (MH, MR, MMR) Gray Scale, Full Color: JPEG

WWW.SERVICE-MANUAL.NET

1.2 SUPPORTED PAPER SIZES

1.2.1 PAPER FEED

North America

BT: By-pass Tray, T1: Tray 1, T2/3/4: Tray 2/3/4, LCT 2000: Large Capacity Tray: 2000-sheet, LCT 1200: Large Capacity Tray: 1200-sheet, DU: Duplex Unit

Paper	Size (W x L)	BT	T1	T2/3/4	LCT 2000	LCT 1200	DU
A3 W	12" x 18"	M	-	-	-	-	-
A3 SEF	297 x 420mm	M	-	M	-	-	M
A4 SEF	210 x 297mm	M	-	A	-	-	M
A4 LEF	297 x 210mm	M	S	M	S	S	M
A5 SEF	148 x 210mm	M	-	-	-	-	-
A5 LEF	210 x 148mm	M	S	A	-	-	M
A6 SEF	105 x 148mm	M	-	-	-	-	-
B4 SEF	257 x 364mm	M	-	M	-	-	M
B5 SEF	182 x 257mm	M	-	A	-	-	M
B5 LEF	257 x 182mm	M	S	M	-	S	M
B6 SEF	128 x 182mm	M	-	-	-	-	-
Ledger	11" x 17"	A	-	A	-	-	M
Letter SEF	8.5" x 11"	A	-	A	-	-	M
Letter LEF	11" x 8.5"	A	M	A	M	M	M
Legal SEF	8.5" x 14"	M	-	A	-	-	M
Government Legal SEF	8.25" x 14"	M	-	M	-	-	M
Half Letter	5.5" x 8.5"	A	-	-	-	-	-

WWW.SERVICE-MANUAL.NET

Paper	Size (W x L)	BT	T1	T2/3/4	LCT 2000	LCT 1200	DU
SEF							
Executive SEF	7.25" x 10.5"	M	-	M	-	-	M
Executive LEF	10.5" x 7.25"	M	-	A	-	-	M
F SEF	8" x 13"	M	-	M	-	-	M
Foolscap SEF	8.5" x 13"	M	-	M	-	-	M
Folio SEF	8.25" x 13"	M	-	M	-	-	M
	11" x 15"	M	-	M	-	-	M
	10" x 14"	M	-	M	-	-	M
	8" x 10"	M	-	M	-	-	M
8K	267 x 390mm	M	-	M	-	-	M
16K SEF	195 x 267mm	M	-	M	-	-	M
16K LEF	267 x 195mm	M	-	M	-	-	M
Custom		M	-	M	-	-	-
Com10 Env.	4.125" x 9.5"	M	-	-	-	-	-
Monarch Env.	3.875" x 7.5"	M	-	-	-	-	-
C6 Env.	114 x 162mm	M	-	-	-	-	-
C5 Env.	162 x 229mm	M	-	-	-	-	-
DL Env.	110 x 220mm	M	-	-	-	-	-

WWW.SERVICE-MANUAL.NET

Remarks:

A	Supported: the sensor detects the paper size.
M	Supported: the user specifies the paper size.
S	Supported: depends on a technician adjustment
-	Not supported

Europe/ Asia

BT: By-pass Tray, T1: Tray 1, T2/3/4: Tray 2/3/4, LCT 2000: Large Capacity Tray: 2000-sheet, LCT 1200: Large Capacity Tray: 1200-sheet, DU: Duplex Unit

Paper	Size (W x L)	BT	T1	T2/3/4	LCT 2000	LCT 1200	DU
A3 W	12" x 18"	M	-	-	-	-	-
A3 SEF	297 x 420mm	A	-	A	-	-	M
A4 SEF	210 x 297mm	A	-	A	-	-	M
A4 LEF	297 x 210mm	A	M	A	M	S	M
A5 SEF	148 x 210mm	A	-	-	-	-	-
A5 LEF	210 x 148mm	A	S	A	-	-	M
A6 SEF	105 x 148mm	A	-	-	-	-	-
B4 SEF	257 x 364mm	M	-	A	-	-	M
B5 SEF	182 x 257mm	M	-	A	-	-	M
B5 LEF	257 x 182mm	M	S	A	-	S	M
B6 SEF	128 x 182mm	M	-	-	-	-	-
Ledger	11" x 17"	M	-	M	-	-	M
Letter SEF	8.5" x 11"	M	-	A	-	-	M
Letter LEF	11" x 8.5"	M	S	M	S	S	M

WWW.SERVICE-MANUAL.NET

Paper	Size (W x L)	BT	T1	T2/3/4	LCT 2000	LCT 1200	DU
Legal SEF	8.5" x 14"	M	-	M	-	-	M
Government Legal SEF	8.25" x 14"	M	-	M	-	-	M
Half Letter SEF	5.5" x 8.5"	M	-	-	-	-	-
Executive SEF	7.25" x 10.5"	M	-	M	-	-	M
Executive LEF	10.5" x 7.25"	M	-	M	-	-	M
F SEF	8" x 13"	M	-	M	-	-	M
Foolscap SEF	8.5" x 13"	M	-	M	-	-	M
Folio SEF	8.25" x 13"	M	-	M	-	-	M
	11" x 15"	M	-	M	-	-	M
	10" x 14"	M	-	M	-	-	M
	8" x 10"	M	-	M	-	-	M
8K	267 x 390mm	M	-	M	-	-	M
16K SEF	195 x 267mm	M	-	M	-	-	M
16K LEF	267 x 195mm	M	-	M	-	-	M
Custom		M	-	M	-	-	-
Com10 Env.	4.125" x 9.5"	M	-	-	-	-	-
Monarch Env.	3.875" x 7.5"	M	-	-	-	-	-
C6 Env.	114 x 162mm	M	-	-	-	-	-
C5 Env.	162 x 229mm	M	-	-	-	-	-
DL Env.	110 x 220mm	M	-	-	-	-	-

WWW.SERVICE-MANUAL.NET

Remarks:

A	Supported: the sensor detects the paper size.
M	Supported: the user specifies the paper size.
S	Supported: depends on a technician adjustment
-	Not supported

1.2.2 PAPER EXIT

2000/3000 Sheet Booklet Finisher (B804/B805)

MF: Main Frame, Prf: Proof, Clr: Clear, Shf: Shift, Stp: Staple, SS: Saddle Stitch,
2P: 2 Holes Punch, N2P: North Europe 2 Holes, 3P: 3 Holes Punch,
Punch 4 P: 4 Holes Punch, N4P: North Europe 4 Holes Punch

Paper	Size (W x L)	MF	2000/3000-sheet booklet finisher								
			Prf	Clr	Shf	Stp	SS	2P/N2P	3P	4P	N4P
A3 W	12" x 18"	Y	Y	Y	Y	30	15	-	-	-	-
A3 SEF	297 x 420 mm	Y	Y	Y	Y	30	15	Y	Y	Y	Y
A4 SEF	210 x 297 mm	Y	Y	Y	Y	50	15	Y	-	-	Y
A4 LEF	297 x 210 mm	Y	Y	Y	Y	50	-	Y	Y	Y	Y
A5 SEF	148 x 210 mm	Y	Y	Y	Y	-	-	Y	-	-	Y
A5 LEF	210 x 148 mm	Y	Y	Y	Y	-	-	Y	-	-	Y
A6 SEF	105 x 148 mm	Y	Y	Y	-	-	-	-	-	-	-

WWW.SERVICE-MANUAL.NET

Paper	Size (W x L)	MF	2000/3000-sheet booklet finisher								
			Prf	Clr	Shf	Stp	SS	2P/N2P	3P	4P	N4P
B4 SEF	257 x 364 mm	Y	Y	Y	Y	30	15	Y	Y	Y*[4]	Y*[4]
B5 SEF	182 x 257 mm	Y	Y	Y	Y	50	15	Y	-	-	Y
B5 LEF	257 x 182 mm	Y	Y	Y	Y	50	Y	Y	Y	Y	Y
B6 SEF	128 x 182 mm	Y	Y	Y	-	-	-	-	-	-	-
Ledger	11" x 17"	Y	Y	Y	Y	30	15	Y	Y	Y	Y
Letter SEF	8.5" x 11"	Y	Y	Y	Y	50	15	Y	-	-	Y
Letter LEF	11" x 8.5"	Y	Y	Y	Y	50	-	Y	Y	Y	Y
Legal SEF	8.5" x 14"	Y	Y	Y	Y	30	15	Y	-	-	Y
Government Legal SEF	8.25" x 14"	Y	Y	Y	Y	30	-	Y	-	-	Y
Half Letter SEF	5.5" x 8.5"	Y	Y	Y	Y	-	-	Y	-	-	Y
Executive SEF	7.25" x 10.5"	Y	Y	Y	Y	50	-	Y	-	-	Y
Executive LEF	10.5" x 7.25"	Y	Y	Y	Y	50	-	Y	Y	Y	Y
F SEF	8" x 13"	Y	Y	Y	Y	30	-	Y	-	-	Y
Foolscap SEF	8.5" x 13"	Y	Y	Y	Y	30	-	Y	-	-	Y
Folio SEF	8.25" x 13"	Y	Y	Y	Y	30	-	Y	-	-	Y
	11" x 15"	Y	Y	Y	Y	30	-	Y	Y	Y	Y

WWW.SERVICE-MANUAL.NET

Supported Paper Sizes

Paper	Size (W x L)	MF	2000/3000-sheet booklet finisher								
			Prf	Clr	Shf	Stp	SS	2P/N2P	3P	4P	N4P
	10" x 14"	Y	Y	Y	Y	30	-	Y	Y	-	Y
	8" x 10"	Y	Y	Y	Y	50	-	Y	-	-	Y
8K	267 x 390 mm	Y	Y	Y	Y	30	-	Y	Y	Y	Y
16K SEF	195 x 267 mm	Y	Y	Y	Y	50	-	Y	-	-	Y
16K LEF	267 x 195 mm	Y	Y	Y	Y	50	-	Y	Y	Y	Y
Custom		Y	Y	Y	-	-	-	Y*[3]	Y*[3]	Y*[3]	Y*[3]
Com10 Env.	4.125" x 9.5"	Y	Y*[1]	Y*[2]	-	-	-	-	-	-	-
Monarch Env.	3.875" x 7.5"	Y	-	Y	-	-	-	-	-	-	-
C6 Env.	114 x 162 mm	Y	-	Y	-	-	-	-	-	-	-
C5 Env.	162 x 229 mm	Y	-	Y	-	-	-	-	-	-	-
DL Env.	110 x 220 mm	Y	-	Y	-	-	-	-	-	-	-

Remarks:

Y	Supported
15	Output up to 15 sheets
30	Output up to 30 sheets
50	Output up to 50 sheets
-	Not supported

WWW.SERVICE-MANUAL.NET

*1: Minimum 100 mm or more, Maximum 600 mm or less

*2: Minimum 100 mm or more, Maximum 600 mm or less

- Longer paper (feed length) than DLT (432 mm) is not guaranteed in this mode.

*3: Minimum 100 mm for 2P, 230 mm for 3P, 255 mm for 4P, 125 mm for N4P

*4: Corner stapling is not available in this mode.

WWW.SERVICE-MANUAL.NET

1000-Sheet Finisher (B408)

MF: Main Frame, Prf: Proof, Clr: Clear, Shf: Shift, Stp: Staple

Paper	Size (W x L)	MF	1000-sheet finisher				1 Bin
			Prf	Clr	Shf	Stp	
A3 W	12" x 18"	Y	Y	Y	Y	30	-
A3 SEF	297 x 420 mm	Y	Y	Y	Y	30	Y
A4 SEF	210 x 297 mm	Y	Y	Y	Y	50	Y
A4 LEF	297 x 210 mm	Y	Y	Y	Y	50	Y
A5 SEF	148 x 210 mm	Y	Y	Y	Y	-	Y
A5 LEF	210 x 148 mm	Y	Y	Y	Y	-	Y
A6 SEF	105 x 148 mm	Y	Y	-	-	-	-
B4 SEF	257 x 364 mm	Y	Y	Y	Y	30	Y
B5 SEF	182 x 257 mm	Y	Y	Y	Y	50	Y
B5 LEF	257 x 182 mm	Y	Y	Y	Y	50	Y
B6 SEF	128 x 182 mm	Y	Y	-	-	-	N
Ledger	11" x 17"	Y	Y	Y	Y	30	Y
Letter SEF	8.5" x 11"	Y	Y	Y	Y	50	Y
Letter LEF	11" x 8.5"	Y	Y	Y	Y	50	Y
Legal SEF	8.5" x 14"	Y	Y	Y	Y	30	Y
Government Legal SEF	8.25" x 14"	Y	Y	Y	Y	30	Y
Half Letter SEF	5.5" x 8.5"	Y	Y	Y	Y	-	Y
Executive SEF	7.25" x 10.5"	Y	Y	Y	Y	50	Y
Executive LEF	10.5" x 7.25"	Y	Y	Y	Y	50	Y

WWW.SERVICE-MANUAL.NET

Paper	Size (W x L)	MF	1000-sheet finisher				1 Bin
			Prf	Clr	Shf	Stp	
F SEF	8" x 13"	Y	Y	Y	Y	30	Y
Foolscap SEF	8.5" x 13"	Y	Y	Y	Y	30	Y
Folio SEF	8.25" x 13"	Y	Y	Y	Y	30	Y
	11" x 15"	Y	Y	Y	Y	30	Y
	10" x 14"	Y	Y	Y	Y	30	Y
	8" x 10"	Y	Y	Y	Y	30	Y
8K	267 x 390 mm	Y	Y	Y	Y	30	Y
16K SEF	195 x 267 mm	Y	Y	Y	Y	50	Y
16K LEF	267 x 195 mm	Y	Y	Y	Y	50	Y
Custom		Y	Y	-	-	-	-
Com10 Env.	4.125" x 9.5"	Y	-	-	-	-	-
Monarch Env.	3.875" x 7.5"	Y	-	-	-	-	-
C6 Env.	114 x 162 mm	Y	-	-	-	-	-
C5 Env.	162 x 229 mm	Y	-	-	-	-	-
DL Env.	110 x 220 mm	Y	-	-	-	-	-

Remarks:

Y	Supported
30	Output up to 30 sheets
50	Output up to 50 sheets
-	Not supported

WWW.SERVICE-MANUAL.NET

1.2.3 PLATEN/ARDF ORIGINAL SIZE DETECTION

Size (width x length) [mm]	Platen	ARDF	Platen	ARDF
	Inches	Inches	Metric	Metric
A3 (297 x 420) SEF	-	Y	Y*[3]	Y
B4 (257 x 364) SEF	-	-	Y*[3]	Y
A4 (210 x 297) SEF	Y*[1]	Y	Y*[3]	Y
A4 (297 x 210) LEF	Y*[3]	Y	Y*[3]	Y
B5 (182 x 257) SEF	-	-	Y*[3]	Y
B5 (257 x 182) LEF	-	-	Y*[3]	Y
A5 (148 x 210) SEF	-	-	-*[1]	Y
A5 (210 x 148) LEF	-	-	-*[1]	Y
B6 (128 x 182) SEF	-	-	-	Y
B6 (182 x 128) LEF	-	-	-	Y
11" x 17" (DLT)	Y	Y*[2]	-	Y*[2]
11" x 15"	-	y*[2]	-	-
10" x 14"	-	Y	-	-
8.5" x 14" (LG)	Y	Y*[2]	-	-
8.5" x 13" (F4)	-	y*[2]	Y*[4]	Y*[4]
8.25" x 13"	-	-	Y*[4]	Y*[4]
8" x 13"(F)	-	-	Y*[4]	Y*[4]
8.5" x 11" (LT)	Y*[3]	Y*[2]	Y*[3]	Y*[2]
11" x 8.5" (LT)	Y*[3]	Y*[2]	Y*[3]	Y*[2]
8" x 10"	-	y*[2]	-	-
5.5" x 8.5" (HLT)	-*[1]	Y	-	-

WWW.SERVICE-MANUAL.NET

8.5" x 5.5" (HLT)	-*1	Y	-	-
8K (267 x 390)	-	-	Y*3	y*2
16K L (195 x 267)	-	-	Y*3	y*2
16K S (267 x 195)	-	-	Y*3	y*2
7.25" x 10.5" (Executive)	-	Y	-	-
10.5" x 7.25" (Executive)	-	y*2	-	-

*1: Use SP4-303 to detect original sizes as A5 lengthwise/HLT when the message "Can-t detect original size" shows.

*2: The machine can detect the paper size depending on the setting of SP6-016-1. In default setting, "Y" is detected. "y" can be detected if you change setting of SP6-016-1.

*3: The machine can detect the paper size depending on the setting of SP4-305-1.

*4: The machine can detect the paper size depending on the setting of SP5-126-1.

WWW.SERVICE-MANUAL.NET

1.3 SOFTWARE ACCESSORIES

The printer drivers and utility software are provided as following two CD-ROMs

1: Printer Drivers and Utilities CD-ROM

2: Scanner/PostScript® Drivers and Utilities CD-ROM.

An auto-run installer lets you to select the components you want to install.

1.3.1 PRINTER DRIVERS

Printer Language	Windows 2000, XP, Server 2003, Vista, Server 2008, 7	MacOS8.6 to 9.x, MacOSX10.1 or later
PCL5c / PCL6	Yes	No
PS3	Yes	Yes
RPCS	No	No

Note

- The PCL5c/6 and PS3 drivers are provided on the printer drivers CD-ROM
- The PS3 drivers are all genuine Adobe PS drivers, except for Windows 2000/XP/2003/Vista/7. Windows 2000 uses Microsoft PS. A PPD file for each operating system is provided with the driver.
- The PPD installer for Macintosh supports Mac OS X 10.1 or later versions.
- The LAN Fax driver lets you fax documents directly form your PC. Address Book Editor and Cover Sheet Editor are to be installed as well. (These require the optional fax unit.)

WWW.SERVICE-MANUAL.NET

1.3.2 SCANNER AND LAN FAX DRIVERS

Printer Language	Windows 2000, XP, Server 2003, Vista, 7	MacOS8.6 to 9.x, MacOSX10.1 or later
Network TWAIN	Yes	No
LAN-FAX	Yes	No

Note

- The Network TWAIN and LAN Fax drivers are provided on the scanner drivers CD-ROM.
- This software lets you fax documents directly form your PC. Address Book Editor and Cover Sheet Editor are to be installed as well. (These require the optional fax unit.)

WWW.SERVICE-MANUAL.NET

1.3.3 UTILITY SOFTWARE

Software	Description
Font Manager (2000/XP/Server 2003/7)	A font management utility with screen fonts for the printer This is provided on the printer drivers CD-ROM
Smart Device Monitor for Admin (2000/XP/Server 2003/Vista/7)	A printer management utility for network administrators. NIB setup utilities are also available. This is provided on the printer drivers CD-ROM
DeskTopBinder – SmartDeviceMonitor for Client (2000/XP/Server 2003/Vista/7)	A printer management utility for client users. A utility for peer-to-peer printing over a NetBEUI or TCP/IP network. A peer-to-peer print utility over a TCP/IP network. This provides the parallel printing and recovery printing features. This is provided on the printer drivers CD-ROM
Printer Utility for Mac (Mac)	A utility for peer-to-peer printing over a NetBEUI or TCP This software provides several convenient functions for printing from Macintosh clients. This is provided on the scanner drivers CD-ROM
DeskTopBinder Lite (2000/XP/Server 2003/7)	DeskTopBinder Lite itself can be used as personal document management software and can manage both image data converted from paper documents and application files saved in each client's PC. This is provided on the scanner drivers CD-ROM

WWW.SERVICE-MANUAL.NET

1.4 OPTIONAL EQUIPMENT

1.4.1 ARDF (D540)

Paper Size/Weight:	Simplex	Size	A3 to A5, DLT to HLT
		Weight	40 to 128 g/m^2 (11 to 34 lb.)
	Duplex	Size	A3 to A5, DLT to HLT
		Weight	52 to 128 g/m^2 (14 to 34 lb.)
Table Capacity:	100 sheets (81.4 g/m^2, 22 lb)		
Original Standard Position:	Rear left corner		
Separation:	Feed belt and separation roller		
Original Transport:	Roller transport		
Original Feed Order:	From the top original		
Supported Magnification Ratios:	Copy	-	32 to 200 %
	Fax	Color	32.6 to 200 %
		Black & white	48.9 to 200 %
Power Source:	DC 24V, 5V from the scanner unit		
Power Consumption:	Less than 60W		
Dimensions (W x D x H):	570 mm x 520 mm x 135 mm (22.4"x20.5"x5.3")		
Weight:	Less than 12kg (26.5 lb.)		

WWW.SERVICE-MANUAL.NET

1.4.2 PAPER FEED UNIT (D537)

Paper Feed System:	FRR
Paper Height Detection:	5 steps (100%, 70%, 30%, 10% (Near end), and Empty)
Capacity:	500 sheets x 2 trays
Paper Weight:	60 to 256 g/m^2 (16 to 68 lb.)
Paper Size:	A3 SEF to A5, DLT SEF to HLT
Power Source:	DC 24V, 5V (from the main frame)
Power Consumption:	Less than 60 W (Max.)/ Less than 35 W (Ave,)
Dimensions (W x D x H):	580 mm x 620 mm x 260 mm (22.8" x 24.4" x 10.2")
Weight:	26 kg (57.3 lb.)

1.4.3 LCT 2000-SHEET (D538)

Paper Size:	A4 LEF/LT LEF
Paper Weight:	60 g/m^2 to 256 g/m^2 (16 lb. to 68 lb.)
Tray Capacity:	2,000 sheets (80 g/m^2, 20lb.)
Remaining Paper Detection:	5 steps (100%, 70%, 30%, 10%, Empty): Right Tray 4 steps (100%, 70%, 30%, Empty): Left Tray
Power Source:	DC 24 V, 5 V (from copier/printer)
Power Consumption:	55 W (Max.)/30 W (Ave.)
Weight:	26 kg (57.3 lb.)
Size (W x D x H):	580 mm x 620 mm x 260 mm (22.8" x 24.4" x 10.2")

WWW.SERVICE-MANUAL.NET

1.4.4 LCT 1200-SHEET (D539)

Paper Size:	A4 LEF/ LT LEF/ B5 LEF
Paper Weight:	60 g/m^2 to 216 g/m^2 (16 lb to 57 lb.)
Tray Capacity:	1,200 sheets (80 g/m^2, 20lb)
Remaining Paper Detection:	5 steps (100%, 75%, 30%, 10%, End)
Power Source:	24 Vdc, 5 Vdc (from copier/printer)
Power Consumption:	55 W (Max)/ 25 W (Ave.)
Weight:	14 kg (30.8 lb.)
Size (W x D x H):	348 mm x 540 mm x 290 mm (13.7" x 21.3" x 11.4")

WWW.SERVICE-MANUAL.NET

1.4.5 3000-SHEET FINISHER (B805)

Finisher			
Dimension (w x d x h)		657 mm x 613 mm x 960 mm (25.9" x 24.1" x 37.8")	
Weight		Less than 54 kg (119 lb.) (no punch unit) Less than 56 kg (123.5 lb.) (with punch unit)	
Power Consumption		Less than 96 W	
Noise		Less than 75 db	
Configuration		Console type attached base-unit	
Power Source		From base-unit	
Proof Tray	Stack Capacity	250 sheets: A4, 8.5" x 11" or smaller 50 sheets: B4, 8.5" x 14 or larger	
	Paper Size	A5-A3 SEF, A6 SEF, A6 SEF 5.5" x 8.5"-11" x 17" SEF, 12" x 18" SEF	
	Paper Weight	52 g/m^2 - 163 g/m^2 (14 lb. - 43 lb.)	
Shift Tray	Stack Capacity	3,000 sheets: A4 LEF, 8.5" x 11" LEF	
		1,500 sheets: A3 SEF, A4 SEF, B4 SEF, B5, 11" x 17" SEF, 8.5" x 14" SEF, 8.5" x 11" SEF, 12" x 18" SEF	
		500 sheets: A5 LEF	
		100 sheets: A5 SEF, B6 SEF, A6 SEF, 5.5" x 8.5" SEF	
	Paper Size	A5 - A3 SEF, A6 SEF, B6 SEF, 5.5" x 8.5"- 11" x 17" SEF, 12" x 18" SEF	
	Paper Weight	52 g/m^2 - 256 g/m^2 (14 lb. - 68 lb.)	
Staples			
Paper Size		B5 - A3	

WWW.SERVICE-MANUAL.NET

		8.5" x 11" - 11" x 17", 12" x 18"	
Paper Weight		64 g/m^2 - 90 g/m^2 (14 lb. - 24 lb.)	
Staple Position		Top, Bottom, 2 Staple, Top-slant	
Stapling Capacity	Same Paper Size	50 sheets	A4, 8.5" x 11" or smaller
		30 sheets	B4, 8.5" x 14" or larger
	Mixed Paper Size	30 sheets	A4 LEF + A3 SEF, B5 LEF + B4 SEF, 8.5" x11" LEF + 11" x 17" SEF

Staple Replenishment	Cartridge exchange / 5000 pins per cartridge		
Stapled Stack Capacity (same size)	Paper Size	Pages/Set	Sets
	A4 LEF, 8.5" x 11" LEF	20 - 50 pages	150 - 60 sets
		2 - 19 pages	150 sets
	A4 SEF, B5, 8.5" x 11" SEF	15 - 50 pages	100 - 30 sets
		2 - 14 pages	100 sets
	Others	15 - 30 pages	100 - 33 sets
		2 - 14 pages	100 sets
Stapled Stack Capacity (mixed sizes)	A4 LEF & A3 SEF, B5 LEF & B4 SEF, 8.5" x11" LEF & 11" x 17" SEF	2 - 30 pages	50 set

WWW.SERVICE-MANUAL.NET

1.4.6 2000-SHEET BOOKLET FINISHER (B804)

Finisher			
Dimension W x D x H		657 mm x 613 mm x 960 mm (25.9 x 24.1 x 37.8")	
Weight		Less than 63 kg (138.6 lb.) (no punch unit) Less than 65 kg (143 lb.) (with punch unit)	
Power Consumption		Less than 96 W	
Noise		Less than 75 db	
Configuration		Console type attached base-unit	
Power Source		From base-unit	
Proof Tray	Stack Capacity	250 sheets: A4, 8.5" x 11" or smaller 50 sheets: B4, 8.5" x 14" or larger	
	Paper Size	A5 - A3 SEF, B6 SEF, A6 LEF 5.5" x 8.5" to 11" x 17" SEF, 12"x18" SEF	
	Paper Weight	52 g/m^2 - 163 g/m^2 (14 lb. - 43 lb.)	
Shift Tray	Stack Capacity	2,000 sheets	A4 LEF, 8.5" x 11" LEF
		1,000 sheets	A3 SEF, A4 SEF, B4 SEF, B5 11" x 17" SEF, 8.5" x 14" SEF, 8.5" x 11" SEF, 12"x18" SEF
		500 sheets	A5 LEF
		100 sheets	A5 SEF, B6 SEF, A6 SEF, 5.5" x 8.5" SEF
	Paper Size	A5 - A3 SEF, A6 SEF, B6 SEF 5.5" x 8.5" to 11" x 17" SEF, 12" x 18" SEF	
	Paper Weight	52 g/m^2 - 256 g/m^2 (14 lb. - 68 lb.)	

WWW.SERVICE-MANUAL.NET

Staple			
Paper Size		B5-A3, 8.5" x 11" - 11" x 17", 12" x 18"	
Paper Weight		64 g/m^2 - 90 g/m^2, 17 lb. Bond - 28 lb. Bond	
Staple Position		Top, Bottom, 2 Staple, Top-slant	
Staples Capacity	Same Paper Size	50 sheets	A4, 8.5" x 11" or smaller
		30 sheets	B4, 8.5" x 14" or larger
	Mixed Paper Size	30 sheets	A4 LEF & A3 SEF, B5 LEF & B4 SEF, 8.5" x 11" LEF & 11" x 17" SEF
	Booklet Stapling	15 sheets	A4 SEF, A3 SEF, B5 SEF, B4 SEF 8.5" x 11" SEF, 8.5" x 14" SEF, 11" x 17" SEF, 12" x 18" SEF

Staple Replenishment		Corner staple	5,000 staples per cartridge
		Booklet staple	2,000 staples per cartridge
Corner Staple Capacity	Same Size	A4 LEF, 8.5" x 11" LEF	13 - 50 pages
			2 - 12 pages
		A4 SEF, B5, 8.5" x 11" SEF	10 - 50 pages
			2 - 9 pages
		Others	10 - 30 pages
			2 - 9 pages
	Mixed Size	A4 LEF + A3 SEF B5 LEF + B4 SEF 8.5" x 11" LEF + 11" x 17" SEF	2 - 30 pages

WWW.SERVICE-MANUAL.NET

Booklet Staple Capacity	A4 SEF, A3 SEF, B5 SEF, B4 SEF 8.5" x 11" SEF, 8.5" x 14" SEF, 11" x 17" SEF 12" x 18" SEF	2 - 5 pages
		6 - 10 pages
		11 - 15 pages

WWW.SERVICE-MANUAL.NET

1.4.7 PUNCH UNIT (B702) FOR 2000/3000-SHEET (BOOKLET) FINISHER

Available Punch Units		NA	2/3 holes switchable
		EU	2/4 holes switchable
		Scandinavia	4 holes
Punch Waste Replenishment		NA 2-holes	Up to 5,000 sheets
		NA 3-holes	Up to 5,000 sheets
		EU 2-holes	Up to 14,000 sheets
		EU 4-holes	Up to 7,000 sheets
		Scandinavia 4-holes	Up to 7,000 sheets
Paper Weight		52 g/m^2 - 163 g/m^2, 14 lb Bond - 43 lb Bond	
Paper Sizes	NA 2-holes	SEF	A5 to A3, 5.5" x 8.5" to 11" x 17"
		LEF	A5 to A4, 5.5" x 8.5" , 8.5" x 11"
	NA 3-holes	SEF	A3, B4, 11" x 17"
		LEF	A4, B5, 8.5" x 11"
	EU 2-holes	SEF	A5 to A3, 5.5" x 8.5" to 11" x 17"
		LEF	A5 to A4, 5.5" x 8.5", 8.5" x 11"
	EU 4-holes	SEF	A3, B4, 11"x17"
		LEF	A4, B5, 8.5" x 11"
	Scandinavia 4-holes	SEF	A5 to A3, 5.5" x 8.5" to 11" x 17"
		LEF	A5 to A4, 5.5" x 8.5", 8.5" x 11"

WWW.SERVICE-MANUAL.NET

1.4.8 1000-SHEET FINISHER (B408)

Upper Tray

Paper Size:	A3 to A6 11" x 17" to 5.5" x 8.5"
Paper Weight:	60 to 157 g/m^2 (16 to 42 lb.)
Paper Capacity:	250 sheets (A4 LEF/8.5" x 11" SEF or smaller) 50 sheets (A4, 8.5" x 11" or smaller) 30 sheets (B4, 8.5" x 14" or larger)

WWW.SERVICE-MANUAL.NET

Lower Tray

Paper Size:	No staple mode: A3 to B5, DLT to HLT Staple mode: A3, B4, A4, B5, DLT to LT			
Paper Weight:	No staple mode: 60 to 157 g/m^2 (16 to 42 lb) Staple mode: 64 to 90 g/m^2 (17 to 24 lb)			
Stapler Capacity:	30 sheets (A3, B4, DLT, LG) 50 sheets (A4, B5 LEF, LT)			
Paper Capacity:	No staple mode: 1,000 sheets (A4/LT or smaller: 80 g/m^2, 20 lb.) 500 sheets (A3, B4, DLT, LG: 80 g/m^2, 20 lb.) Staple mode: (80 g/m^2, 20 lb., number of sets)			
	Set Size	2 to 9	10 to 50	
	Size		10 to 30	31 to 50
	A4/LT LEF B5 LEF	100	100 to 20	100 to 20
	A4/LT SEF	100	50 to 10	50 to 10
	A3, B4, DLT, LG	50	50 to 10	-
Staple positions:	1 Staple: 2 positions (Front, Rear) 2 Staples: 2 positions (Upper, Left)			
Staple Replenishment:	Cartridge (5,000 staples/cartridge)			
Power Source:	DC 24 V, 5 V (from the copier/printer)			
Power Consumption:	50 W			
Weight:	25 kg (55.2 lbs)			
Dimensions (W x D x H):	527 x 520 x 790 mm (20.8" x 20.5" x 31.1")			

WWW.SERVICE-MANUAL.NET

1.4.9 BRIDGE UNIT (D386)

Paper Size:	Standard sizes A6 SEF to A3, HLT to DLT Non-standard sizes Width: 90 to 305 mm Length: 148 to 600 mm
Paper Weight:	52 g/m^2 to 256 g/m^2, 16 lb. to 68 lb.
Paper Capacity:	250 sheet (A4/ $8_{1/2}$" x $11_{1/2}$" or smaller: 80g/m^2/ 20 lbs) 125 sheet (B4 $8_{1/2}$" x $11_{1/2}$" or larger: 80g/m^2/ 20 lbs)
Power Source:	DC 24 V, 5 V (form the copier/printer)
Dimensions (W x D x H):	415 mm x 412 mm x 111 mm (16.3" x 16.2" x 4.4")
Weight	5 kg (11 lb.)

1.4.10 SHIFT TRAY (D388)

Paper Capacity:	250 sheet (A4/ $8_{1/2}$" x $11_{1/2}$" or smaller: 80g/m^2/ 20 lbs) 125 sheet (B4 $8_{1/2}$" x $11_{1/2}$" or larger: 80g/m^2/ 20 lbs)
Paper Size:	Standard sizes A6 SEF to A3, HLT to DLT Non-standard sizes Width: 90 to 305 mm Length: 148 to 600 mm
Paper Weight:	52-256 g/m^2/ 14 - 68 lbs
Power Consumption:	Max 10W (Power is supplied from the mainframe.)
Dimension (W x D x H):	423 mm x 468 mm x 114 mm (16.7" x 18.4" x 4.5")
Weight:	Approx. 2kg (4.4lbs)

WWW.SERVICE-MANUAL.NET

1.4.11 1-BIN TRAY UNIT (D536)

Paper Size:	Standard Size: A3 /DLT to A5/ HLT SEF
Paper Weight:	60 to 169 g/m^2, 16 to 45 lb.
Tray Capacity:	125 sheets (80 g/m^2, 20 lb., A4)
Power Source:	DC 24 V, 5 V (from the copier)
Power Consumption:	Less than 1 W
Weight:	1.7 kg
Size (W x D x H):	565 mm x 410 mm x 115 mm (22.2" x 16.1" x 4.5")

WWW.SERVICE-MANUAL.NET

WWW.SERVICE-MANUAL.NET

APPENDIX:

PREVENTIVE MAINTENANCE

REVISION HISTORY		
Page	**Date**	**Added/Updated/New**
		None

WWW.SERVICE-MANUAL.NET

WWW.SERVICE-MANUAL.NET

2. APPENDIX: PREVENTIVE MAINTENANCE TABLES

2.1 MAINTENANCE TABLES

2.1.1 PREVENTIVE MAINTENANCE ITEMS

Chart: A4 (LT)/5%

Mode: 4 copies / original (prints/job)

Ratio 30%

Environment: Normal temperature and humidity

Yield may change depending on circumstances and print conditions.

Symbol keys: C: Clean, R: Replace, L: Lubricant, I: Inspect

Mainframe

Item	150K	200K	300K	450K	EM	Remarks
Scanner						
Reflector		C				Optics cloth
1st/2nd/3rd mirrors		C				Optics cloth
Front and Rear Rails		C				Dry cloth
Exposure Glass		C			C	Dry cloth; alcohol
ADF Exposure Glass		C			C	Dry cloth; alcohol
APS Sensor		C				Dry cloth
PCDU						
Dev. Unit–K					R: 600K	
Dev. Unit– C, M, Y					R	
Drum Unit-K,		R				
Drum Unit-C, M, Y					R: 400K	

WWW.SERVICE-MANUAL.NET

Item	150K	200K	300K	450K	EM	Remarks
Developer-K			R			
Developer-C, M, Y					R	
Transfer						
Image Transfer Belt-cleaning Unit		R				
Image Transfer Belt Unit					R: 600K	
Paper Transfer Roller Unit			R			
Toner Collection Bottle	R: 150K					
Fusing						
Heating Roller			R			
-Bearing			R/L			S552R
Pressure Roller			R			
-Bearing			R/L			S552R
Entrance guide plate			C			
Exit guide plate			C			
Exit Separate plate			C			
Thermopile			C			Cotton swab with alcohol
If the heating roller is not replaced, the machine stops operating at 330k.						
Paper Path						
Registration Roller					C	Damp cloth
Registration Sensor					C	Dry cloth
Vertical Transport					C	Damp cloth

WWW.SERVICE-MANUAL.NET

Item	150K	200K	300K	450K	EM	Remarks
Roller						
Vertical Transport Sensor					C	Dry cloth
Paper Feed Sensor					C	Dry cloth
Pick-up Belt					C	Dry cloth
Feed Roller					C	Dry cloth
Separation Roller					C	Dry cloth
Fusing Entrance Sensor					C	Dry cloth
Fusing Exit Sensor					C	Dry cloth
Paper Dust Container	C				C	
Duplex Unit						
Inverter Roller					C	Damp cloth
Transport Roller					C	Damp cloth
Duplex Entrance Sensor					C	Dry cloth
Duplex Exit Sensor					C	Dry cloth
Miscellaneous						
Ozone Filter		R				
Exhaust Filter		R				
Dust Glass					C	
ID Sensor					C	Blower Brush

*1: Clean this thermistor only when it has paper dust.

WWW.SERVICE-MANUAL.NET

ARDF (D540)

Item	120K	EM	Remarks
Sensors		C	Blower brush
Platen Sheet Cover		C	Damp cloth; alcohol (Replace if required.)
White Plate		C	Dry or damp cloth
Drive Gear		L	Grease G501
Transport Roller		C	Damp cloth; alcohol
Exit Roller		C	Damp cloth; alcohol
Inverter Roller		C	Damp cloth; alcohol
Idle Rollers		C	Damp cloth; alcohol

Two-tray Paper Feed Unit (D537)

Item	EM	Remarks
Feed Roller	C	Dry cloth
Separation Roller	C	Dry cloth
Pick-up Roller	C	Dry cloth
Paper Feed Sensor	C	Dry cloth
Relay Sensor	C	Dry cloth
Relay Roller	C	Damp cloth
Bottom Plate Pad	C	Damp cloth

WWW.SERVICE-MANUAL.NET

1200-sheet LCT (D539)

Item	EM	Remarks
Feed Roller	C	Dry cloth
Separation Roller	C	Dry cloth
Pick-up Roller	C	Dry cloth
Paper Feed Sensor	C	Dry cloth
Relay Sensor	C	Dry cloth
Relay Roller	C	Damp cloth
Bottom Plate Pad	C	Damp cloth

2000-sheet LCT (D538)

Item	EM	Remarks
Feed Roller	C	Dry cloth
Separation Roller	C	Dry cloth
Pick-up Roller	C	Dry cloth
Paper Feed Sensor	C	Dry cloth
Relay Sensor	C	Dry cloth
Relay Roller	C	Damp cloth
Bottom Plate Pad	C	Damp cloth

WWW.SERVICE-MANUAL.NET

2000/3000-Sheet (Booklet) Finisher (B804/B805)

Items	EM	Remarks
Rollers	C	Damp cloth
Discharge Brush	C	Dry cloth
Sensors	C	Blower brush

2000/3000-Sheet (Booklet) Finisher Punch Kit (B702)

Items	EM	Remarks
Punch Chads	C	Discard chads.

1000-Sheet Finisher (B408)

Items	EM	Remarks
Rollers	C	Damp cloth
Discharge Brush	C	Dry cloth
Sensors	C	Blower brush

WWW.SERVICE-MANUAL.NET

1 Bin Tray (D536)

Items	EM	Remarks
Rollers	C	Damp cloth
Tray	C	Damp cloth
Sensor	C	Blower brush
Bearing	C	S552R

Bridge Unit (D386)

Items	EM	Remarks
Rollers	C	Damp cloth

Shift Tray (D388)

Items	EM	Remarks
Tray	C	Damp cloth

Side tray (B542)

Items	EM	Remarks
Rollers	C	Damp cloth
Sensors	C	Blower brush

WWW.SERVICE-MANUAL.NET

2.1.2 OTHER YIELD PARTS

The parts mentioned in these tables have a target yield. However, the total copy/print volume made by the machine will not reach the target yield within the machine's targeted lifetime if the machine is used under the target usage conditions (ACV, color ratio, P/J, and C/O). So, these parts are categorized not as PM parts but as yield parts (EM parts).

Mainframe

Item	120K	240K	480K	600K	Remarks
Dev. Unit–C, M, Y			R		
Developer- C, M, Y		R			
ITB Unit				R	

ARDF

Item	80K	120K	240K	320K	Remarks
Pick-up Roller		R			Number of originals
Feed Belt		R			Number of originals
Separation Roller		R			Number of originals

WWW.SERVICE-MANUAL.NET

APPENDIX:

SP MODE TABLES

REVISION HISTORY		
Page	**Date**	**Added/Updated/New**
458 ~ 459	2/21/2011	SP1-1001-009 bit 4

WWW.SERVICE-MANUAL.NET

WWW.SERVICE-MANUAL.NET

3. APPENDIX: SP MODE TABLES

3.1 SYSTEM SP1-XXX

3.1.1 SP1-XXX (FEED)

1001	[Leading Edge Registration] Leading Edge Registration Adjustment (Tray Location, Paper Type, Color Mode), Paper Type -> Plain, Thick 1or Thick 2		
	Adjusts the leading edge registration by changing the registration motor operation timing for each mode.		
002	Tray: Plain	*ENG	[–9 to 9 / **0.0** / 0.1 mm/step]
003	Tray: Middle Thick	*ENG	
004	Tray: Thick 1	*ENG	
005	Tray: Thick 2	*ENG	
007	By-pass: Plain	*ENG	
008	By-pass: Middle Thick	*ENG	
009	By-pass: Thick 1	*ENG	
010	By-pass: Thick 2	*ENG	
011	By-pass: Thick 3	*ENG	
013	Duplex: Plain	*ENG	
014	Duplex: Middle Thick	*ENG	
015	Duplex: Thick 1	*ENG	
016	Tray: Thick 3	*ENG	[–9 to 9 / **0.0** / 0.1 mm/step]
017	Tray: Plain:1200	*ENG	
018	Tray: Middle Thick:1200	*ENG	
019	Tray: Thick 1:1200	*ENG	

WWW.SERVICE-MANUAL.NET

020	By-pass: Plain:1200	*ENG	
021	By-pass: Middle Thick:1200	*ENG	
022	By-pass: Thick 1:1200	*ENG	
023	Duplex: Plain:1200	*ENG	
024	Duplex: Middle Thick:1200	*ENG	
025	Duplex: Thick 1:1200	*ENG	

1002	[Side to Side Reg.] Side-to-Side Registration Adjustment		
	Adjusts the side-to-side registration by changing the laser main scan start position for each mode.		
001	By-pass Table	*ENG	[–4 to 4 / **0.0** / 0.1 mm/step]
002	Paper Tray 1	*ENG	
003	Paper Tray 2	*ENG	
004	Paper Tray 3	*ENG	
005	Paper Tray 4	*ENG	
006	Duplex	*ENG	
007	Paper Tray 5	*ENG	
008	Large Capacity Tray	*ENG	

WWW.SERVICE-MANUAL.NET

1003	[Paper Buckle] Paper Buckle Adjustment (Tray Location, Paper Type), Paper Type: N: Normal, TH: Thick		
	Adjusts the amount of paper buckle at the registration roller by changing the paper feed timing.		
002	Paper Tray1: Plain	*ENG	[–9 to 5 / **-2** / 1 mm/step]
003	Tray1: Middle Thick	*ENG	[–9 to 5 / **-1** / 1 mm/step]
004	Paper Tray1: Thick1	*ENG	[–9 to 5 / **-2** / 1 mm/step]
007	Paper Tray2/3/4/5/LCT: Plain	*ENG	
008	Tray 2/3/4/5/LCT: Middle Thick	*ENG	[–9 to 5 / **-1** / 1 mm/step]
009	Paper Tray2/3/4/5/LCT: Thick 1	*ENG	[–9 to 5 / **-2** / 1 mm/step]
012	By-pass: Plain	*ENG	[–9 to 5 / **0** / 1 mm/step]
013	By-pass: Middle Thick	*ENG	
014	By-pass: Thick 1	*ENG	[–9 to 5 / **-2** / 1 mm/step]
018	Duplex: Plain	*ENG	[–9 to 5 / **0** / 1 mm/step]
019	Duplex: Middle Thick	*ENG	
020	Duplex: Thick 1	*ENG	[–9 to 5 / **-2** / 1 mm/step]
021	Paper Tray1: Plain: 1200	*ENG	[–9 to 5 / **0** / 1 mm/step]
022	Tray1: Middle Thick: 1200	*ENG	
023	Tray 2/3/4/5LCT: Plain: 1200	*ENG	
024	Tray 2/3/4/5LCT: Mid: 1200	*ENG	
025	By-pass: Plain: 1200	*ENG	
026	By-pass: Middle Thick: 1200	*ENG	
027	Paper Tray1: Thick1: 1200	*ENG	[–9 to 5 / **-2** / 1 mm/step]
028	Paper Tray2/3/4/5/LCT: Thick 1:1200	*ENG	

WWW.SERVICE-MANUAL.NET

029	By-pass: Thick 1: 1200	*ENG	
030	Duplex: Plain: 1200	*ENG	[–9 to 5 / **0** / 1 mm/step]
031	Duplex: Middle Thick: 1200	*ENG	
032	Duplex: Thick 1: 1200	*ENG	[–9 to 5 / **-2** / 1 mm/step]

1007	[By-Pass Size Detection] By-Pass Size Detection Display		
001	LG	*ENG	[0 or 1 / **0** / -] 0: OFF, 1: ON
	Enables or disables the automatic paper size detection function of the by-pass tray. This SP determines what paper size the machine detects if the detected size is less than 8.5”. 0: OFF (Letter/SEF), 1: ON (Legal/SEF)		

1101	[Reload Permit Setting]		
	Specifies the settings of the reload permit for cold temperature in color mode.		
001	Pre-rotation Start Temp.	*ENG	[0 to 200 / **0** / 1 deg/step]
	Specifies the pre-rotation start temperature.		
002	Reload Target Temp.:Center	*ENG	[120 to 180 / **180** / 1 deg/step]
	Specifies the reload target temperature of the heating roller.		
003	Reload Target Temp.:Press	*ENG	[0 to 200 / **120** / 1 deg/step]
	Specifies the reload target temperature of the pressure roller.		
004	Temp.:Delta:Cold:Center	*ENG	[0 to 200 / **5** / 1 deg/step]
	Specifies the temperature correction of the heating roller (center) when the fusing unit is determined as cold state.		
005	Temp.:Delta:Cold:End	*ENG	[40 to 200 / **100** / 1 deg/step]
	Specifies the temperature correction of the heating roller (end) when the fusing unit is determined as cold state.		
006	Temp.:Delta:Cold:Press	*ENG	[0 to 200 / **C2.5c: 55, C2.5d: 45** / 1

WWW.SERVICE-MANUAL.NET

			deg/step]
	Specifies the temperature correction of the pressure roller when the fusing unit is determined as cold state.		
007	Time:Cold	*ENG	[0 to 100 / **C2.5c: 20, C2.5d: 34** / 1 sec/step]
	Specifies the threshold time for the fusiing reload when the fusing unit is determined as cold state.		
008	Temp.:Delta:Warm:Center	*ENG	[0 to 200 / **C2.5c: 15, C2.5d: 10** / 1 deg/step]
	Specifies the temperature correction of the heating roller (center) when the fusing unit is determined as warm state.		
009	Temp.:Delta:Warm:End	*ENG	[40 to 200 / **100** / 1 deg/step]
	Specifies the temperature correction of the heating roller (end) when the fusing unit is determined as warm state.		
010	Temp.:Delta:Warm:Press	*ENG	[0 to 200 / **C2.5c: 55, C2.5d: 45** / 1 deg/step]
	Specifies the temperature correction of the pressure roller when the fusing unit is determined as warm state.		
011	Time:Warm	*ENG	[0 to 100 / **C2.5c: 20, C2.5d: 34** / 1 sec/step]
	Specifies the threshold time for the fusing reload when the fusing unit is determined as warm state.		
012	Temp.:Delta:Hot:Center	*ENG	[0 to 200 / **C2.5c: 15, C2.5d: 10** / 1 deg/step]
	Specifies the temperature correction of the heating roller (center) when the fusing unit is determined as hot state.		
013	Temp.:Delta:Hot:End	*ENG	[40 to 200 / **100** / 1 deg/step]
	Specifies the temperature correction of the heating roller (end) when the fusing unit is determined as hot state.		

WWW.SERVICE-MANUAL.NET

014	Temp.:Delta:Hot:Press	*ENG	[0 to 200 / **C2.5c: 55, C2.5d: 45** / 1 deg/step]
	Specifies the temperature correction of the pressure roller when the fusing unit is determined as hot state.		
015	Time:Hot	*ENG	[0 to 100 / **C2.5c: 20, C2.5d: 34** / 1 sec/step]
	Specifies the threshold time for the fusing reload when the fusing unit is determined as hot state.		
016	Temp.:Delta:Cold:BW:Center	*ENG	[0 to 200 / **C2.5c: 10, C2.5d: 5** / 1 deg/step]
	Specifies the temperature correction of the heating roller (center) in the black and white mode when the fusing unit is determined as cold state.		
017	Temp.:Delta:Cold:BW:End	*ENG	[40 to 200 / **100** / 1 deg/step]
	Specifies the temperature correction of the heating roller (end) in the black and white mode when the fusing unit is determined as cold state.		
018	Temp.Delta:Cold:BW:Press	*ENG	[0 to 200 / **C2.5c: 60, C2.5d: 50** / 1 deg/step]
	Specifies the temperature correction of the pressure roller in the black and white mode when the fusing unit is determined as cold state.		
019	Time:Cold:BW	*ENG	[0 to 100 / **C2.5c: 20, C2.5d: 34** / 1 sec/step]
	Specifies the threshold time for the fusing reload in black and white mode when the fusing unit is determined as cold state.		
020	Temp.:Delta:Cold:BW2:Center	*ENG	[0 to 200 / **C2.5c: 10, C2.5d: 5** / 1 deg/step]
	Specifies the temperature correction of the heating roller (center) in the black and white mode when the fusing unit is determined as warm state.		
021	Temp.:Delta:Cold:BW2:End	*ENG	[40 to 200 / **100** / 1 deg/step]
	Specifies the temperature correction of the heating roller (end) in the black and white mode when the fusing unit is determined as warm state.		

WWW.SERVICE-MANUAL.NET

022	Temp.Delta:Cold:BW2:Press	*ENG	[0 to 200 / **C2.5c: 70, C2.5d: 50** / 1 deg/step]
	Specifies the temperature correction of the pressure roller in the black and white mode when the fusing unit is determined as warm state.		
023	Time:Cold:BW2	*ENG	[0 to 100 / **C2.5c: 20, C2.5d: 34** / 1 sec/step]
	Specifies the threshold time for the fusing reload in black and white mode when the fusing unit is determined as warm state.		

1102	[Feed Permit Setting]		
	Specified the settings of the paper feeding timing.		
001	Temp.:Lower Delta:Center	*ENG	[0 to 200 / **5** / 1 deg/step]
	Specifies the subtractive temperature of the heating roller (center) for the paper feed permission.		
002	Temp.:Lower Delta:End	*ENG	[0 to 200 / **100** / 1 deg/step]
	Specifies the subtractive temperature of the heating roller (end) for the paper feed permission.		
003	Temp.:Upper Delta:Center	*ENG	[0 to 200 / **100** / 1 deg/step]
	Specifies the additional temperature of the heating roller (center) for the paper feed permission.		
004	Temp.:Upper Delta:End	*ENG	[0 to 200 / **100** / 1 deg/step]
	Specifies the additional temperature of the heating roller (end) for the paper feed permission.		
005	Temp.:Lower Delta:Press	*ENG	[0 to 200 / **100** / 1 deg/step]
	Specifies the subtractive temperature of the pressure roller for the paper feed permission.		
006	Rotation Time	*ENG	[0 to 100 / **0** / 1 sec/step]

WWW.SERVICE-MANUAL.NET

	Specifies the threshold time of the pre-rotation for the paper feed permission.		
007	Temp.:Lower Delta:Center:Sp.1	*ENG	[0 to 200 / **5** / 1 deg/step]
008	Temp.:Lower Delta:End:Sp.1	*ENG	[0 to 200 / **100** / 1 deg/step]
009	Temp.:Upper Delta:Center:Sp.1	*ENG	[0 to 200 / **100** / 1 deg/step]
010	Temp.:Upper Delta:End:Sp.1	*ENG	[0 to 200 / **100** / 1 deg/step]
011	Temp.:Lower Delta:Press:Sp.1	*ENG	[0 to 200 / **50** / 1 deg/step]
012	Rotation Time:Sp.1	*ENG	[0 to 200 / **0** / 1 sec/step]
013	Temp.:Lower Delta:Center:Sp.2	*ENG	[0 to 200 / **5** / 1 deg/step]
014	Temp.:Lower Delta:End:Sp.2	*ENG	[0 to 200 / **100** / 1 deg/step]
015	Temp.:Upper Delta:Center:Sp.2	*ENG	[0 to 200 / **15** / 1 deg/step]
016	Temp.:Upper Delta:End:Sp.2	*ENG	[0 to 200 / **100** / 1 deg/step]
017	Temp.:Lower Delta:Press:Sp.2	*ENG	[0 to 200 / **100** / 1 deg/step]
018	Rotation Time:Sp2	*ENG	[0 to 100 / **0** / 1 sec/step]
019	Feed Permit Time	*ENG	[0 to 200 / **120** / 1 sec/step]

WWW.SERVICE-MANUAL.NET

1105	[Print Target Temp]		
	(Printing Mode, Roller Type, [Color], Simplex/Duplex) Roller Type –> Center and Ends: Heating roller, Pressure –> Pressure roller Paper Type -> Plain, Thin, Thick, OHP, Middle Thick, Special		
001	Plain1:FC:Center	*ENG	[120 to 200 / **C2.5c: 160, C2.5d: 165** / 1 deg/step]
	Specifies the heating roller target temperature for the ready condition in full color printing.		
002	Plain1:FC:Press	*ENG	[100 to 200 / **120** / 1 deg/step]
	Specifies the pressure roller target temperature for the ready condition in full color printing..		
003	Plain1:BW:Center	*ENG	[120 to 200 / **C2.5.5c: 150, C2.5.5d: 155** / 1 deg/step]
	Specifies the heating roller target temperature for the ready condition in BW printing.		
004	Plain1:BW:Press	*ENG	[100 to 200 / **120** / 1 deg/step]
	Specifies the pressure roller target temperature for the ready condition in BW printing.		
005	Plain2:FC:Center	*ENG	[120 to 200 / **C2.5c: 165, C2.5d: 170** / 1 deg/step]
	Specifies the heating roller target temperature for the ready condition in full color printing.		
006	Plain2:FC:Press	*ENG	[100 to 200 / **120** / 1 deg/step]
	Specifies the pressure roller target temperature for the ready condition in full coloe printing.		
007	Plain2:BW:Center	*ENG	[120 to 200 / **C2.5c: 155, C2.5d: 165** / 1 deg/step]
	Specifies the heating roller target temperature for the ready condition in BW printing.		

WWW.SERVICE-MANUAL.NET

008	Plain2:BW:Press	*ENG	[100 to 200 / **120** / 1 deg/step]
	Specifies the pressure roller target temperature for the ready condition in BW printing.		
009	Thin:FC:Center	*ENG	[120 to 200 / **C2.5c: 155, C2.5d: 160** / 1 deg/step]
010	Thin:FC:Press	*ENG	[100 to 200 / **120** / 1 deg/step]
011	Thin:BW:Center	*ENG	[120 to 200 / **C2.5c: 145, C2.5d: 150** / 1 deg/step]
012	Thin:BW:Press	*ENG	[100 to 200 / **120** / 1 deg/step]
013	M-thick:FC:Center	*ENG	[120 to 200 / **C2.5c: 170, C2.5d: 175** / 1 deg/step]
014	M-thick:FC:Press	*ENG	[100 to 200 / **120** / 1 deg/step]
015	M-thick:BW:Center	*ENG	[120 to 200 / **C2.5c: 160, C2.5d: 165** / 1 deg/step]
016	M-thick:BW:Press	*ENG	[100 to 200 / **120** / 1 deg/step]
017	Thick1:FC:Center	*ENG	[120 to 200 / **175** / 1 deg/step]
018	Thick1:FC:Press	*ENG	[100 to 200 / **120** / 1 deg/step]
019	Thick1:BW:Center	*ENG	[120 to 200 / **165** / 1 deg/step]
020	Thick1:BW:Press	*ENG	[100 to 200 / **120** / 1 deg/step]
021	Thick2:FC:Center	*ENG	[120 to 200 / **165** / 1 deg/step]
022	Thick2:FC:Press	*ENG	[100 to 200 / **120** / 1 deg/step]
023	Thick2:BW:Center	*ENG	[120 to 200 / **155** / 1 deg/step]
024	Thick2:BW:Press	*ENG	[100 to 200 / **120** / 1 deg/step]
025	Thick3:FC:Center	*ENG	[120 to 200 / **170** / 1 deg/step]
026	Thick3:FC:Press	*ENG	[100 to 200 / **120** / 1 deg/step]
027	Thick3:BW:Center	*ENG	[120 to 200 / **160** / 1 deg/step]
028	Thick3:BW:Press	*ENG	[100 to 200 / **120** / 1 deg/step]

WWW.SERVICE-MANUAL.NET

029	Special1:FC:Center	*ENG	[120 to 200 / **C2.5c: 165, C2.5d: 170** / 1 deg/step]
030	Special1:FC:Press	*ENG	[100 to 200 / **120** / 1 deg/step]
031	Special1:BW:Center	*ENG	[120 to 200 / **C2.5c: 155, C2.5d: 160** / 1 deg/step]
032	Special1:BW:Press	*ENG	[100 to 200 / **120** / 1 deg/step]
033	Special2:FC:Center	*ENG	[120 to 200 / **175** / 1 deg/step]
034	Special2:FC:Press	*ENG	[100 to 200 / **120** / 1 deg/step]
035	Special2:BW:Center	*ENG	[120 to 200 / **165** / 1 deg/step]
036	Special2:BW:Press	*ENG	[100 to 200 / **120** / 1 deg/step]
037	Special3:FC:Center	*ENG	[120 to 200 / **165** / 1 deg/step]
038	Special3:FC:Press	*ENG	[100 to 200 / **120** / 1 deg/step]
039	Special3:BW:Center	*ENG	[120 to 200 / **155** / 1 deg/step]
040	Special3:BW:Press	*ENG	[100 to 200 / **120** / 1 deg/step]
041	Envelop:Center	*ENG	[120 to 200 / **180** / 1 deg/step]
042	Envelop:Press	*ENG	[100 to 200 / **120** / 1 deg/step]
101	Plain1:FC:Center:Low Speed	*ENG	[120 to 200 / **135** / 1 deg/step]
102	Plain1:FC:Press:Low Speed	*ENG	[100 to 200 / **120** / 1 deg/step]
103	Plain1:BW:Center:Low Speed	*ENG	[120 to 200 / **135** / 1 deg/step]
104	Plain1:BW:Press:Low Speed	*ENG	[100 to 200 / **120** / 1 deg/step]
105	Plain2:FC:Center:Low Speed	*ENG	[120 to 200 / **140** / 1 deg/step]
106	Plain2:FC:Press:Low Speed	*ENG	[100 to 200 / **120** / 1 deg/step]

WWW.SERVICE-MANUAL.NET

107	Plain2:BW:Center:Low Speed	*ENG	[120 to 200 / **135** / 1 deg/step]
108	Plain2:BW:Press:Low Speed	*ENG	[100 to 200 / **120** / 1 deg/step]
109	M-thick:FC:Center:Low Speed	*ENG	[120 to 200 / **145** / 1 deg/step]
110	M-thick:FC:Press:Low Speed	*ENG	[100 to 200 / **120** / 1 deg/step]
111	M-thick:BW:Center:Low Speed	*ENG	[120 to 200 / **140** / 1 deg/step]
112	M-thick:BW:Press:Low Speed	*ENG	[100 to 200 / **120** / 1 deg/step]
113	Thick1:FC:Center:Low Speed	*ENG	[120 to 200 / **150** / 1 deg/step]
114	Thick1:FC:Press:Low Speed	*ENG	[100 to 200 / **120** / 1 deg/step]
115	Thick1:BW:Center:Low Speed	*ENG	[120 to 200 / **145** / 1 deg/step]
116	Thick1:BW:Press:Low Speed	*ENG	[100 to 200 / **120** / 1 deg/step]
117	Special1:FC:Center:Low Speed	*ENG	[120 to 200 / **135** / 1 deg/step]
118	Special1:FC:Press:Low Speed	*ENG	[100 to 200 / **120** / 1 deg/step]
119	Special1:BW:Center:Low Speed	*ENG	[120 to 200 / **130** / 1 deg/step]
120	Special1:BW:Press:Low Speed	*ENG	[100 to 200 / **120** / 1 deg/step]
121	Special2:FC:Center:Low Speed	*ENG	[120 to 200 / **150** / 1 deg/step]

WWW.SERVICE-MANUAL.NET

122	Special2:FC:Press:Low Speed	*ENG	[100 to 200 / **120** / 1 deg/step]
123	Special2:BW:Center:Low Speed	*ENG	[120 to 200 / **145** / 1 deg/step]
124	Special2:BW:Press:Low Speed	*ENG	[100 to 200 / **120** / 1 deg/step]
125	Plain1:Glossy:Center	*ENG	[120 to 200 / **140** / 1 deg/step]
126	Plain1:Glossy:Press	*ENG	[100 to 200 / **120** / 1 deg/step]
127	Plain2:Glossy:Center	*ENG	[120 to 200 / **145** / 1 deg/step]
128	Plain2:Glossy:Press	*ENG	[100 to 200 / **120** / 1 deg/step]
129	M-thick:Glossy:Center	*ENG	[120 to 200 / **150** / 1 deg/step]
130	M-thick:Glossy:Press	*ENG	[100 to 200 / **120** / 1 deg/step]
131	OHP:Center	*ENG	[120 to 200 / **150** / 1 deg/step]
132	OHP:Press	*ENG	[100 to 200 / **120** / 1 deg/step]
133	Envelop:Center:Low Speed	*ENG	[120 to 200 / **170** / 1 deg/step]
134	Envelop:Press:Low Speed	*ENG	[100 to 200 / **120** / 1 deg/step]
135	Thin:FC:Center:Low Speed	*ENG	[120 to 200 / **135** / 1 deg/step]
136	Thin:FC:Press:Low Speed	*ENG	[100 to 200 / **120** / 1 deg/step]
137	Thin:BW:Center:Low Speed	*ENG	[120 to 200 / **130** / 1 deg/step]
138	Thin:BW:Press:Low Speed	*ENG	[100 to 200 / **120** / 1 deg/step]
139	Thick4:FC:Center	*ENG	[120 to 200 / **175** / 1 deg/step]
140	Thick4:FC:Press	*ENG	[100 to 200 / **120** / 1 deg/step]

WWW.SERVICE-MANUAL.NET

141	Thick4:BW:Center	*ENG	[120 to 200 / **165** / 1 deg/step]
142	Thick4:BW:Press	*ENG	[100 to 200 / **120** / 1 deg/step]

1106	[Fusing Temp. Display]		
001	Center	-	[-10 to 250 / - / 1 deg/step] Displays the temperature of the heating roller.
002	End	-	
003	Pressure	-	[-10 to 250 / - / 1 deg/step] Displays the temperature of the pressure roller.
004	Pressure End	-	

1107	[Standby Target Temp. Setting]		
001	Standby Heater Off Time	*ENG	[0 to 100 / **15** / 1 sec/step]
	Specifies the time that the fusing heater turns off after the fusing unit temperature has reached its target temperature.		
002	Stanby/Preheat1: Press	*ENG	[0 to 125 / **90** / 1 deg/step]
	Specifies the temperature of the pressure roller for the ready or energy save 1 mode.		
004	Preheat2:Press	*ENG	[0 to 125 / **90** / 1 deg/step]
	Specifies the temperature of the pressure roller for the energy save 2 mode.		
006	Low Power:Press	*ENG	[0 to 125 / **60** / 1 deg/step]
	Specifies the temperature of the pressure roller for the low power mode.		
007	Print Ready:Center	*ENG	[120 to 180 / **C2.5c: 165, C2.5d: 170** / 1 deg/step]
	Specifies the temperature of the heating roller for the print ready condition.		
008	Print Ready:Press	*ENG	[100 to 200 / **120** / 1 deg/step]
	Specifies the temperature of the pressure roller for the print ready condition.		

WWW.SERVICE-MANUAL.NET

1108	[After Reload/Job Target Temp.]		
001	Center	*ENG	[120 to 180 / **C2.5c: 165, C2.5d: 170** / 1 deg/step]
	Specifies the temperature of the heating roller after re-load or job.		
002	Press	*ENG	[100 to 200 / **120** / 1 deg/step]
	Specifies the temperature of the pressure roller after re-load or job.		

1111	[Environment Correction:Fusing]		
001	Temp.: Threshold: Low	*ENG	[0 to 100 / **17** / 1 deg/step]
	Specifies the threshold temperature for low temperature. If the fusing temperature is 17°C or less, the machine executes the fusing mode for low temperature.		
002	Temp.: Threshold: High	*ENG	[0 to 100 / **30** / 1 deg/step]
	Sepcifies the threshold temperature for high temperature. If the fusing temperature is 30°C or more, the machine executes the fusing mode for high temperature.		
003	Low Temp. Correction	*ENG	[0 to 15 / **5** / 1 deg/step]
	Specifies the additional temperature for the target temperature. If the fusing temperature is in low temperature condition, this temperature is added to the taraget temperature.		
004	High Temp. Correction	*ENG	[0 to 15 / **0** / 1 deg/step]
	Specifies the additional temperature for the target temperature. If the fusing temperature is in high temperature condition, this temperature is added to the taraget temperature.		
005	Job Low Temp. Correction	*ENG	[0 to 100 / **5** / 0.1 deg/step]
	Specifies the additional temperature for the target temperature when the environmental condition is determined as low temperature.		

WWW.SERVICE-MANUAL.NET

006	Job High Temp. Correction	*ENG	[0 to 100 / **0** / 0.1 deg/step]
	Specifies the additional temperature for the target temperature when the environmental condition is determined as high temperature.		
007	Job Low Temp. Correction:Sp.	*ENG	[0 to 100 / **10** / 0.1 deg/step]
	Specifies the additional temperature for the target temperature when the environmental condition is determined as low temperature and special paper is selected.		
008	Job High Temp. Correction:Sp.	*ENG	[0 to 100 / **0** / 0.1 deg/step]
	Specifies the additional temperature for the target temperature when the environmental condition is determined as high temperature and special paper is selected.		

1112	[Repeat Temperature Correction]		
001	Control Time 1	*ENG	[0 to 300 / **130** / 1 sec/step]
	Specifies the threshold time for entering the repeat temperature correction mode after the first sheet of paper has reached to the registration roller.		
002	Control Time 2	*ENG	[0 to 300 / **130** / 1 sec/step]
	Specifies the threshold time for entering the repeat temperature correction mode after the control time 1 (specified with SP1112-001) has elapsed.		
003	Temp.:Plain:Center:1	*ENG	[-15 to 15 / **C2.5c: 0, C2.5d: -5** / 0.1 deg/step]
	Specifies the correction temperature of the heating roller for plain paper when the operation time of the machine is in the interval between control time 1 and control time 2.		

WWW.SERVICE-MANUAL.NET

004	Temp.:Plain:Press:1	*ENG	[-10 to 10 / **0** / 0.1 deg/step]
	Specifies the correction temperature of the pressure roller for plain paper when the operation time of the machine is in the interval between control time 1 and control time 2.		
005	Temp.:Plain:Center:2	*ENG	[-15 to 15 / **-5** / 0.1 deg/step]
	Specifies the correction temperature of the heating roller for plain paper when the operation time of the machine is more than control time 2.		
006	Temp.:Plain:Press:2	*ENG	[-10 to 10 / **0** / 0.1 deg/step]
	Specifies the correction temperature of the pressure roller for plain paper when the operation time of the machine is more than control time 2.		
007	Temp.:M-thick:Center:1	*ENG	[-15 to 15 / **-10** / 0.1 deg/step]
	Specifies the correction temperature of the heating roller for middle thick paper when the operation time of the machine is in the interval between control time 1 and control time 2.		
008	Temp.:M-thick:Press:1	*ENG	[-10 to 10 / **0** / 0.1 deg/step]
	Specifies the correction temperature of the pressure roller for middle thick paper when the operation time of the machine is in the interval between control time 1 and control time 2.		
009	Temp.:M-thick:Center:2	*ENG	[-15 to 15 / **-15** / 0.1 deg/step]
	Specifies the correction temperature of the heating roller for middle thick paper when the operation time of the machine is more than control time 2.		
010	Temp.:M-thick:Press:2	*ENG	[-10 to 10 / **0** / 0.1 deg/step]
	Specifies the correction temperature of the pressure roller for middle thick paper when the operation time of the machine is more than control time 2.		
011	Temp.:Others:Center:1	*ENG	[-15 to 15 / **C2.5c: 0, C2.5d: -5** / 0.1 deg/step]
	Specifies the correction temperature of the heating roller for paper type other than plain and middle thick paper when the operation time of the machine is in the interval between control time 1 and control time 2.		

WWW.SERVICE-MANUAL.NET

012	Temp.:Others:Press:1	*ENG	[-10 to 10 / **0** / 0.1 deg/step]
	Specifies the correction temperature of the pressure roller for other than palin and middle thick paper when the operation time of the machine is in the interval between control time 1 and control time 2.		
	[Image Processing Temp. Correct]		
013	Temp.:Plain:Center: Level1	*ENG	[-20 to 20 / **0** / 0.1 deg/step]
	Specifies the correction temperature for the level 1 of the job image control in black and white printing mode.		
014	Temp.:Plain:Center: Level2	*ENG	[-20 to 20 / **-2** / 0.1 deg/step]
	Specifies the correction temperature for the level 2 of the job image control in black and white printing mode.		

1113	[Curl Correction]		
001	Execute Pattern	*ENG	[0 to 2 / **0** / 1 /step] 0: Off, 1: On (No Decurl), 2: On
	Selects the curl correction type. 0: The curl correction is not done. 1: The curl correction is done only when paper is fed to the 1 bin tray. 2: The curl correction is always done.		
002	Humidity:Threshold:M-humid	*ENG	[0 to 100 / **1** / 1 %/step]
	Specifies the threshold between low and middle humidity.		
003	Humidity:Threshold:H-humid	*ENG	[0 to 100 / **65** / 1 %/step]
	Specifies the threshold between middle and high humidity.		
004	Permit Temp.:Delta:Press:M-humid	*ENG	[0 to 200 / **40** / 1 deg/step]
	Specifies the threshold temperature for the curl control in middle humidity.		

WWW.SERVICE-MANUAL.NET

005	Permit Temp.:Delta:Press:H-humid	*ENG	[0 to 200 / **30** / 1 deg/step]
	Specifies the threshold temperature for the curl control in high humidity.		
006	Permit Temp.:Delta:Press:M-humid:No Decurl	*ENG	[0 to 200 / **30** / 1 deg/step]
	Specifies the threshold temperature for the no curl control in middle humidity.		
007	Permit Temp.:Delta:Press:H-humid:No Decurl	*ENG	[0 to 200 / **20** / 1 deg/step]
	Specifies the threshold temperature for the no curl control in high humidity.		
008	CPM:M-humid	*ENG	[0 to 100 / **80** / 1 %/step]
	Specifies the CPM ratio of the decurl control against to the normal operation in middle humidity.		
009	CPM:H-humid	*ENG	[0 to 100 / **65** / 1 %/step]
	Specifies the CPM ratio of the decurl control against to the normal operation in high humidity.		
010	CPM:M-humid:No Decurl	*ENG	[0 to 100 / **80** / 1 %/step]
	Specifies the CPM ratio against of the no decurl control to the normal operation in middle humidity.		
011	CPM:H-humid:No Decurl	*ENG	[0 to 100 / **65** / 1 %/step]
	Specifies the CPM ratio against of the no decurl control to the normal operation in high humidity.		

WWW.SERVICE-MANUAL.NET

1114	[Heat Storage Status]		
001	Temp.:Threshold:Press	*ENG	[0 to 200 / **80** / 1 deg/step]
	Specifies the threshold temperature of the pressure roller for the heat storage status.		
002	Temp.:Threshold:Atmosphere	*ENG	[0 to 200 / **60** / 1 deg/step]
	Specifies the threshold temperature inside the machine for the heat storage feedback control.		

1115	[Target Temp. Correction]		
001	Temp.:Delta:End	*ENG	[-100 to 100 / **0** / 1 deg/step]
	Specifies the different temperature between end and center of the heating roller.		

1116	[Heat Storage FB Control]		
001	Execution mode	*ENG	[0 to 2 / **1** / 1 /step] 0: OFF, 1: ON (BW), 2: ON (BW/FC)
	Selects the heat storage FB control mode.		
011	Time Out	*ENG	[0 to 500 / **5** / 1 sec/step]
	Specifies the no-entry time for the heat strorage FB control after the LD units have fired.		
021	Delay:Standard Speed:FC:1	*ENG	[0 to 20,000 / **C2.5c: 2600, C2.5d: 2100** / 1 msec/step]
022	Delay:Standard Speed:BW:1	*ENG	[0 to 20,000 / **C2.5c: 1000, C2.5d: 800** / 1 msec/step]
031	Delay:Standard Speed:FC:2	*ENG	[0 to 20,000 / **C2.5c: 2600, C2.5d: 2100** / 1 msec/step]
032	Delay:Standard Speed:BW:2	*ENG	[0 to 20,000 / **C2.5c: 1000, C2.5d: 800** / 1 msec/step]

WWW.SERVICE-MANUAL.NET

041	Press Reference Temp.	*ENG	[0 to 200 / **100** / 1 deg/step]
	Specifies the standard temperature for the pressure roller during the heat storage FB control.		
042	Temp. Correction Lower Limit	*ENG	[-30 to 0 / **-2** / 1 deg/step]
	Specifies the lower llimit temperature for the heat storage FB control.		
043	Temp. Correction Upper Limit	*ENG	[0 to 30 / **0** / 1 deg/step]
	Specifies the upper llimit temperature for the heat storage FB control.		
051	Paper Thickness Coefficient:Plain1	*ENG	[0 to 100 / **20** / 1 /step]
	Specifies the additional temperatreu to the heat strage FB control for plain paper 1.		
052	Paper Thickness Coefficient:Plain2	*ENG	[0 to 100 / **20** / 1 /step]
	Specifies the additional temperatreu to the heat strage FB control for plain paper 2.		

WWW.SERVICE-MANUAL.NET

1121	[Switch:Rotation Start/Stop]		
001	Time:After Reload	*ENG	[0 to 100 / **60** / 1 sec/step]
	Specifies the ON time of the pressure roler lamp after the fusing temperature has reached the reload temperature.		
002	Time:After Recovery	*ENG	[0 to 100 / **15** / 1 sec/step]
	Specifies the ON time of the pressure roler lamp after the fusing temperature has reached the target temperature.		
003	Time:After Job	*ENG	[0 to 100 / **0** / 1 sec/step]
	Specifies the ON time of the pressure roler lamp after the paper feeding has finished.		
004	Press Temp.:After Reload	*ENG	[0 to 160 / **160** / 1 deg/step]
	Specifies the target temperature of the pressure roller center area after the fusing temperature has reached the reload temperature.		
005	End Uniform Start Temp.:B4	*ENG	[0 to 250 / **200** / 1 deg/step]
	Specifies the target temperature of the pressure roller end arear after the B4 paper feeding has finished.		
006	End Uniform Start Temp.:A4	*ENG	[0 to 250 / **185** / 1 deg/step]
	Specifies the target temperature of the pressure roller end arear after the A4 paper feeding has finished.		
007	End Uniform Start Temp.:A5	*ENG	[0 to 250 / **170** / 1 deg/step]
	Specifies the target temperature of the pressure roller end arear after the A5 paper feeding has finished.		
008	Overshoot Prevent Temp.	*ENG	[0 to 250 / **220** / 1 deg/step]
	Specifies the temperature of the heating roller for the overshoot prevention.		
009	Overshoot Prevent Time	*ENG	[0 to 100 / **10** / 1 sec/step]

WWW.SERVICE-MANUAL.NET

	Specifies the interval of the fusing unit rotation for the overshoot prevention.

1122	[Standby Rotation Setting] **DFU**		
001	Rotation Interval	*ENG	[0 to 240 / **60** / 1 min/step]
	Specifies the rotation interval of the fusing unit in the stand-by mode.		
002	Rotation Time	*ENG	[0 to 60 / **0.7** / 0.1 sec/step]
	Specifies the rotation time of the fusing unit in the stand-by mode.		

1124	[CPM Down Setting]		
	Specifies the settings for the CPM down mode.		
001	Low:Down Temp.	*ENG	[-50 to 0 / **-20** / 1 deg/step]
	Specifies the CPM down threshold temperature for the low temperature condition. If the fusing temperature decreases -20°C (adjustable) below the target temperature, the machine enters the CPM down mode.		
002	Low:Up Temp.	*ENG	[-50 to 0 / **-15** / 1 deg/step]
	Specifies the CPM up threshold temperature for the low temperature condition. If the fusing temperature increases -15°C (adjustable) below the target temperature, the machine enters the CPM up mode.		
003	Low :1st CPM	*ENG	[10 to 100 / **80** / 5 %/step]
	Specifies the 1st CPM down ration against the normal CPM in the low temperature condition.		
004	Low :2nd CPM	*ENG	[10 to 100 / **65** / 5 %/step]
	Specifies the 2nd CPM down ration against the normal CPM in the low temperature condition.		
005	Low :3rd CPM	*ENG	[10 to 100 / **50** / 5 %/step]
	Specifies the 3rd CPM down ration against the normal CPM in the low temperature condition.		

WWW.SERVICE-MANUAL.NET

006	High :1st CPM	*ENG	[10 to 100 / **75** / 5 %/step]
	Specifies the 1st CPM down ration against the normal CPM in the high temperature condition.		
007	High:2nd CPM	*ENG	[10 to 100 / **50** / 5 %/step]
	Specifies the 3rd CPM down ration against the normal CPM in the high temperature condition.		
008	High:3rd CPM	*ENG	[10 to 100 / **25** / 5 %/step]
	Specifies the 1st CPM down ration against the normal CPM in the high temperature condition.		
009	High:1st CPM Down Temp.:A3	*ENG	[100 to 250 / **230** / 1 deg/step]
	Specifies the heating roller temperature for 1st CPM down of A3 paper size.		
010	High:2nd CPM Down Temp.:A3	*ENG	[100 to 250 / **233** / 1 deg/step]
	Specifies the heating roller temperature for 2nd CPM down of A3 paper size.		
011	High:3rd CPM Down Temp.:A3	*ENG	[100 to 250 / **235** / 1 deg/step]
	Specifies the heating roller temperature for 3rd CPM down of A3 paper size.		
012	High:1st CPM Down Temp.:A4	*ENG	[100 to 250 / **180** / 1 deg/step]
	Specifies the heating roller temperature for 1st CPM down of A4 paper size.		
013	High:2nd CPM Down Temp.:A4	*ENG	[100 to 250 / **183** / 1 deg/step]
	Specifies the heating roller temperature for 2nd CPM down of A4 paper size.		
014	High:3rd CPM Down Temp.:A4	*ENG	[100 to 250 / **185** / 1 deg/step]
	Specifies the heating roller temperature for 3rd CPM down of A4 paper size.		

WWW.SERVICE-MANUAL.NET

015	High:1st CPM Down Temp.:B5:Press	*ENG	[100 to 250 / **175** / 1 deg/step]
	Specifies the pressure roller temperature for 1st CPM down of B5 paper size.		
016	High:2nd CPM Down Temp.:B5:Press	*ENG	[100 to 250 / **180** / 1 deg/step]
	Specifies the pressure roller temperature for 2nd CPM down of B5 paper size.		
017	High:3rd CPM Down Temp.:B5:Press	*ENG	[100 to 250 / **185** / 1 deg/step]
	Specifies the pressure roller temperature for 3rd CPM down of B5 paper size.		
018	High:1st CPM Down Temp.:A5:Press	*ENG	[100 to 250 / **180** / 1 deg/step]
	Specifies the pressure roller temperature for 1st CPM down of A5 paper size.		
019	High:2nd CPM Down Temp.:A5:Press	*ENG	[100 to 250 / **185** / 1 deg/step]
	Specifies the pressure roller temperature for 2nd CPM down of A5 paper size.		
020	High:3rd CPM Down Temp.:A5:Press	*ENG	[100 to 250 / **190** / 1 deg/step]
	Specifies the pressure roller temperature for 3rd CPM down of A5 paper size.		
021	High:1st CPM Down Temp.:A6:Press	*ENG	[100 to 250 / **160** / 1 deg/step]
	Specifies the pressure roller temperature for 1st CPM down of A6 paper size.		
022	High:2nd CPM Down Temp.:A6:Press	*ENG	[100 to 250 / **165** / 1 deg/step]
	Specifies the pressure roller temperature for 2nd CPM down of A6 paper size.		
023	High:3rd CPM Down Temp.:A6:Press	*ENG	[100 to 250 / **170** / 1 deg/step]
	Specifies the pressure roller temperature for 3rd CPM down of A6 paper size.		

WWW.SERVICE-MANUAL.NET

024	Judging Interval	*ENG	[0 to 250 / **5** / 1 sec/step]
	Specifies the interval for CPM down judgement.		

1131	[Continues Print Mode Switch]		
001	Feed Permit Condition	*ENG	[0 to 2 / **0** / 1 /step] 0: Productivity priority 1: Fusing quality priority 1 2: Fusing quality priority 2
	Selects the paper feed permission type.		

1132	[Maximum Duty Switch]		
001	Control Method Switch	*ENG	[0 to 2 / **0** / 1 /step] 0: Fixed Duty, 1: Power Control

1141	[Fusing SC Issue Time Info]		
001	SC Number	*ENG	Displays the issued SC number.
002	SC Cause	*ENG	[0 to 9 / **-** / 1/step]
101	Htg Roller:Ctr Diff1	*ENG	[0 to 260 / - / 1 deg/step] Displays the temperature at the center of the heating roller when an SC was issued.
102	Htg Rolloer:Ctr Det1	*ENG	
103	Htg Roller:Ctr Corr1	*ENG	
104	Htg Roller:End Diff1	*ENG	[0 to 260 / - / 1 deg/step] Displays the temperature at the end of the heating roller when an SC was issued.
105	Htg Roller:End Det1	*ENG	
106	Htg Roller:End Corr1	*ENG	
107	Press Roller Temp Value1	*ENG	[0 to 260 / - / 1 deg/step] Displays the temperature at the pressure roller when an SC was issued.
151	Htg Roller:Ctr Diff2	*ENG	[0 to 260 / - / 1 deg/step]

WWW.SERVICE-MANUAL.NET

152	Htg Rolloer:Ctr Det2	*ENG	
153	Htg Roller:Ctr Corr2	*ENG	
154	Htg Roller:End Diff2	*ENG	[0 to 260 / - / 1 deg/step]
155	Htg Roller:End Det2	*ENG	
156	Htg Roller:End Corr2	*ENG	
157	Press Roller Temp Value2	*ENG	[0 to 260 / - / 1 deg/step]
201	Htg Roller:Ctr Diff3	*ENG	[0 to 260 / - / 1 deg/step]
202	Htg Rolloer:Ctr Det3	*ENG	
203	Htg Roller:Ctr Corr3	*ENG	
204	Htg Roller:End Diff3	*ENG	[0 to 260 / - / 1 deg/step]
205	Htg Roller:End Det3	*ENG	
206	Htg Roller:End Corr3	*ENG	
207	Press Roller Temp Value3	*ENG	[0 to 260 / - / 1 deg/step]

1142	[Fusing Jam Detection]		
001	SC Display	*ENG	[0 or 1 / **0** / -] 0: ON, 1: OFF
	Enables or disables the fusing consecutive jam (three times) SC detection.		

WWW.SERVICE-MANUAL.NET

1151	[Pressure Setting]		
001	Pressure Change ON/OFF	*ENG	[0 or 1 / **1** / -]
	Enables or disables the pressure switching control for the fusing unit. 0: OFF , 1: ON		
002	Pressure Position1	*ENG	[0 to 10,000 / **490** / 10 msec/step]
	Specifies the rotation time of the pressure roller contact motor for the pressure position 1.		
003	Pressure Position2	*ENG	[0 to 10,000 / **660** / 10 msec/step]
	Specifies the rotation time of the pressure roller contact motor for the pressure position 2.		
004	Pressure Position3	*ENG	[0 to 10,000 / **2130** / 10 msec/step]
	Specifies the rotation time of the pressure roller contact motor for the pressure position 3.		
005	Depressure Position	*ENG	[0 to 10,000 / **220** / 10 msec/step]
	Specifies the rotation time of the pressure roller contact motor for the depression position (no pressure).		
010	Shift Time	*ENG	[0 to 3600 / **5** / 1 sec/step]
	Specifies the timing for depressing the fusing unit. If the machine does not get any jobs for specified time by this SP after copying or printing, the machine depresses the fusing unit.		
101	Pressure:Plain1/2	*ENG	[0 to 3 / **3** / 1 /step]
	Sets the default pressure position of the fusing unit for each paper type in normal speed. 0: Depression position (no pressure) 1: Position 1 (less pressure) 2: Position 2 3: Position 3 (strongest pressure)		
102	Pressure:Thin	*ENG	[0 to 3 / **3** / 1 /step]

WWW.SERVICE-MANUAL.NET

103	Pressure:M-thick	*ENG	[0 to 3 / **3** / 1 /step]
104	Pressure:Thick1	*ENG	[0 to 3 / **3** / 1 /step]
105	Pressure:Thick2	*ENG	[0 to 3 / **2** / 1 /step]
106	Pressure:Thick3	*ENG	[0 to 3 / **2** / 1 /step]
107	Pressure:Special1	*ENG	[0 to 3 / **3** / 1 /step]
108	Pressure:Special2	*ENG	[0 to 3 / **3** / 1 /step]
109	Pressure:Special3	*ENG	[0 to 3 / **2** / 1 /step]
110	Pressure:Envelope	*ENG	[0 to 3 / **1** / 1 /step]
151	Pressure:Plain1/2:Low Speed	*ENG	[0 to 3 / **3** / 1 /step]
	Sets the default pressure position of the fusing unit for each paper type in low speed. 0: Depression position (no pressure) 1: Position 1 (less pressure) 2: Position 2 3: Position 3 (strongest pressure)		
152	Pressure:M-thick:Low Speed	*ENG	[0 to 3 / **3** / 1 /step]
153	Pressure:Thick1:Low Speed	*ENG	[0 to 3 / **3** / 1 /step]
154	Pressure:Special1:Low Speed	*ENG	[0 to 3 / **3** / 1 /step]
155	Pressure:Special2:Low Speed	*ENG	[0 to 3 / **3** / 1 /step]
156	Pressure:Plain1/2:Glossy	*ENG	[0 to 3 / **3** / 1 /step]
157	Pressure:M-thick:Glossy	*ENG	[0 to 3 / **3** / 1 /step]
158	Pressure:OHP	*ENG	[0 to 3 / **3** / 1 /step]
159	Pressure:Envelope:Low Speed	*ENG	[0 to 3 / **1** / 1 /step]
160	Pressure:Thin:Low Speed	*ENG	[0 to 3 / **3** / 1 /step]

WWW.SERVICE-MANUAL.NET

161	Pressure:Thick4	*ENG	[0 to 3 / **2** / 1 /step]
	Sets the default pressure position of the fusing unit for thick 4 paper. 0: Depression position (no pressure) 1: Position 1 (less pressure) 2: Position 2 3: Position 3 (strongest pressure)		
201	Filler Edge Detection Counter	ENG	[0 to 9,000,000 / - / 1 /step]
	Displays the detection time for the edge of the pressure roller actuator.		

1152	[Fusing Nip Band Check]		
001	Execute	-	-
	Executes the nip band measurement between heating roller and pressure roller. If the nip band width is not 8 mm, and fusing is not good, replace the pressure roller or install a new fusing unit.		
002	Pre-Idling Time	*ENG	[0 to 255 / **240** / 1 sec/step]
	Specifies the fusing rotation time before executing SP1109-001.		
003	Stop Time	* ENG	[5 to 30 / **20** / 1 sec/step]
	Specifies the time for measuring the nip.		
004	Pressure Position	* ENG	[1 to 3 / **3** / 1]
	Specifies the pressure position for measuring the nip.		

1153	[Fuser Cleaning]		
001	Compulsion execution	-	Execute the fusing cleaning mode.
002	Operation interval	*ENG	[1 to 300 / **0** / 1 K/step]
	Adjusts the execution interval for the fusing cleaning mode. 1K= 100 sheets		
003	Control Temp.		[0 to 200 / **180** / 1°C/step]

WWW.SERVICE-MANUAL.NET

	Specifies the heating roller temperature for the fusing cleaning mode.		
004	Page Count	*ENG	[1 to 300000 / **-** / 1 page/step]
	Displays the page counter for the fusing cleaning mode.		

1801	[Motor Speed Adj.] FA		
001	Registration:Plain:Low	*ENG	[–2 to 2 / **–1.1** / 0.1 %/step]
002	Registration:Plain:High	*ENG	[–2 to 2 / **–0.1** / 0.1 %/step]
003	Registration:Middle Thick:Low	*ENG	[–2 to 2 / **–1.1** / 0.1 %/step]
004	Registration:Middle Thick:Mid	*ENG	[–2 to 2 / **–0.1** / 0.1 %/step]
005	Registration:Middle Thick:High	*ENG	
006	Registration:Thick 1:Low	*ENG	[–2 to 2 / **–1.1** / 0.1 %/step]
007	Registration:Thick1:Mid	*ENG	[–2 to 2 / **–0.1** / 0.1 %/step]
008	Registration:Thick 2:Low	*ENG	[–2 to 2 / **–1.1** / 0.1 %/step]
009	Registration:Thick 3:Low	*ENG	
010	Duplex CW:Plane:Low	*ENG	[–4 to 4 / **0.0** / 0.1 %/step]
011	Duplex CW:Normal:High	*ENG	
012	Duplex CW:Middle Thick:Low	*ENG	
013	Duplex CW:Middle Thick:Mid	*ENG	
014	Duplex CW:Middle Thick:High	*ENG	
015	Duplex CW:Thick1:Low	*ENG	
016	Duplex CW:Thick1:Mid	*ENG	
017	Duplex CW:Thick2:Low	*ENG	
018	Duplex CW:Thick3:Low	*ENG	
019	Duplex CCW:Normal:High	*ENG	[–4 to 4 / **0.0** / 0.1 %/step]
020	Duplex CCW:Middle Thick:Mid	*ENG	

WWW.SERVICE-MANUAL.NET

021	Duplex CCW:Middle Thick:high	*ENG	
023	Duplex CCW:Thick1:Mid	*ENG	
024	Reverse CW:Normal:High	*ENG	[–4 to 4 / **–0.5** / 0.1%/step]
025	Reverse CW:Middle Thick:Mid	*ENG	[–4 to 4 / **0** / 0.1 %/step]
026	Reverse CW:Middle Thick:High	*ENG	[–4 to 4 / **–0.5** / 0.1%/step]
028	Reverse CW:Thick1:Mid	*ENG	[–4 to 4 / **0** / 0.1 %/step]
029	Reverse CCW:Normal:High	*ENG	
030	Reverse CCW:Middle Thick:Mid	*ENG	
031	Reverse CCW:Middle Thick:High	*ENG	
033	Reverse CCW:Thick1:Mid	*ENG	
034	Feed:Plain:Low	*ENG	[–2 to 2 / –**1.1** / 0.1 %/step]
035	Feed:Plain:High	*ENG	[–2 to 2 / –**0.1** / 0.1 %/step]
036	Feed:Middle thick:Low	*ENG	[–2 to 2 / –**1.1** / 0.1 %/step]
037	Feed:Middle thick:Mid	*ENG	[–2 to 2 / –**0.1** / 0.1 %/step]
038	Feed:Middle thick:High	*ENG	
039	Feed:Thick 1:Low	*ENG	[–2 to 2 / –**1.1** / 0.1 %/step]
040	Feed:Thick 1:Mid	*ENG	[–2 to 2 / –**0.1** / 0.1 %/step]
041	Feed:Thick 2:Low	*ENG	[–2 to 2 / –**1.1** / 0.1 %/step]
042	Feed:Thick 3:Low	*ENG	
043	Bridge Motor:Low	*ENG	[–4 to 4 / **0** / 0.1 %/step]
044	Bridge Motor:Mid	*ENG	
045	Bridge Motor:High	*ENG	
060	KOpcDevMot:High	*ENG	[–4 to 4 / –**0.6** / 0.01 %/step]
061	KOpcDevMot:Mid	*ENG	

WWW.SERVICE-MANUAL.NET

062	KOpcDevMot:Low	*ENG	
063	MOpcDevMot:High	*ENG	[–10 to 10 / **0** / 1 step/step]
064	MOpcDevMot:Mid	*ENG	[–9 to 9 / **0** / 1 step/step]
065	MOpcDevMot:Low	*ENG	[–14 to 14 / **0** / 1 step/step]
066	COpcDevMot:High	*ENG	[–10 to 10 / **0** / 1 step/step]
067	COpcDevMot:Mid	*ENG	[–9 to 9 / **0** / 1 step/step]
068	COpcDevMot:Low	*ENG	[–14 to 14 / **0** / 1 step/step]
069	YOpcDevMot:High	*ENG	[–10 to 10 / **0** / 1 step/step]
070	YOpcDevMot:Mid	*ENG	[–9 to 9 / **0** / 1 step/step]
071	YOpcDevMot:Low	*ENG	[–14 to 14 / **0** / 1 step/step]
072	Fusing: High	*ENG	[–4 to 4 / **1.9** / 0.01 %/step]
073	Fusing: Mid	*ENG	[–4 to 4 / **1.4** / 0.01 %/step]
074	Fusing: Low	*ENG	[–4 to 4 / **1.7** / 0.01 %/step]
075	TransferMot:High	*ENG	[–4 to 4 / –**0.2** / 0.01 %/step]
076	TransferMot:Mid	*ENG	
077	TransferMot:Low	*ENG	
078	TonerMot	*ENG	[–30 to 30 / **10** / 5 %/step]
079	Fusing Exit Motor: 1200	*ENG	[–4 to 4 / **2.1** / 0.01 %/step]
100	Drum Adjust	*ENG	[0 or 1 / **1** / 1] 0: Off, 1: On
	Enables or disables the drum amplitude adjustment.		
101	MOpcDevMot:High	*ENG	[–10 to 10 / **C2.5c: 0** / 1 step/step] [–8 to 8 / **C2.5d: 0** / 1 step/step]
102	COpcDevMot:High	*ENG	
103	YOpcDevMot:High	*ENG	
104	MOpcDevMot:Mid	*ENG	[–7 to 7 / **0** / 1 step/step]

WWW.SERVICE-MANUAL.NET

105	COpcDevMot:Mid	*ENG	
106	YOpcDevMot:Mid	*ENG	
107	MOpcDevMot:Low	*ENG	[–14 to 14 / **0** / 1 step/step]
108	COpcDevMot:Low	*ENG	
109	YOpcDevMot:Low	*ENG	
110	MOpcDevMot:1200	*ENG	[– 7 to 7 / **0** / 1 step/step]
111	COpcDevMot:1200	*ENG	
112	YOpcDevMot:1200	*ENG	
120	Long:Registration:Plain:High	*ENG	[–2 to 2 / **-0.1** / 0.1 %/step]
121	Long:Registration:Plain:Low	*ENG	[–2 to 2 / **-1.1** / 0.1 %/step]
122	Long:Registration:Middle Thick:High	*ENG	[–2 to 2 / **-0.1** / 0.1 %/step]
123	Long:Registration:Middle Thick:Middle	*ENG	
124	Long:Registration:Middle Thick:Low	*ENG	[–2 to 2 / **-1.1** / 0.1 %/step]
125	Long:Registration:Thick 1:Middle	*ENG	[–2 to 2 / **-1** / 0.1 %/step]
126	Long:Registration:Thick 1:Low	*ENG	[–2 to 2 / **-1.1** / 0.1 %/step]
127	Long:Registration:Thick 2:Low	*ENG	[–2 to 2 / **-1.1** / 0.1 %/step]
128	Long:Registration:Thick 3:Low	*ENG	[–2 to 2 / **-1.1** / 0.1 %/step]
129	Long:Fusing:Plain:High	*ENG	[–4 to 4 / **1.9** / 0.01 %/step]
130	Long:Fusing:Plain:Low	*ENG	[–4 to 4 / **2.1** / 0.01 %/step]
131	Long:Fusing:Middle Thick:High	*ENG	[–4 to 4 / **1.9** / 0.01 %/step]
132	Long:Fusing:Middle Thick:Middle	*ENG	[–4 to 4 / **1.4** / 0.01 %/step]
133	Long:Fusing:Middle Thick:Low	*ENG	[–4 to 4 / **2.1** / 0.01 %/step]

WWW.SERVICE-MANUAL.NET

134	Long:Fusing:Thick 1:Middle	*ENG	[–4 to 4 / **2.0** / 0.01 %/step]
135	Long:Fusing:Thick 1:Low	*ENG	[–4 to 4 / **1.7** / 0.01 %/step]
136	Long:Fusing:Thick 2:Low	*ENG	[–4 to 4 / **1.7** / 0.01 %/step]
137	Long:Fusing:Thick 3:Low	*ENG	[–4 to 4 / **1.7** / 0.01 %/step]

1902	[Amplitude Control]		
001	Execute	-	Execute the drum phase adjustment.
002	Result	*ENG	[0 to 3 / **0** / 1] Displays the result of the drum phase adjustment. 0: Successfully done 2: Sampling failure 3: Insufficient detection number
003	Auto Execution	*ENG	[0 or 1 / **1** / -] Turns the automatic drum phase adjustment on or off. 0: Off, 1: On

1907	[Paper Feed Timing Adj.] **DFU**		
002	Feed Solenoid ON: Plain	*ENG	[35 to 85 / **60** / 5 %/step]
003	Feed Clutch OFF: Plain	*ENG	[–10 to 10 / **0** / 1 mm/step]
004	Feed Clutch ON: Plain	*ENG	
005	Inverter Stop Position	*ENG	
006	Reverse Stop Position	*ENG	
007	Re-Feed Stop Position S Size	*ENG	
008	By-pass Solenoid OFF	*ENG	[0 to 40 / **0** / 1 mm/step]
009	By-pass Solenoid Re-ON	*ENG	[0 or 1 / **1** / -]
010	By-pass Feed Clutch ON	*ENG	[–10 to 10 / **0** / 1 mm/step]

WWW.SERVICE-MANUAL.NET

012	Feed Solenoid ON: Thick	*ENG	[–10 to 40 / **0** / 2.5 mm/step]
013	Feed Clutch OFF: Thick	*ENG	[–10 to 10 / **0** / 1 mm/step]
014	Feed Clutch ON: Thick	*ENG	
015	Re-Feed Stop Position	*ENG	

1908	[Paper Bank Feed Timing Adj.] **DFU**		
010	Bridge Junction Gate Sol-ON	*ENG	[–10 to 10 / **0** / 1 mm/step]
011	Bridge Junction Gate Sol-OFF	*ENG	
012	1 Bin Junction Gate Sol-ON	*ENG	
013	1 Bin Junction Gate Sol-OFF	*ENG	
015	Junction Gate SOL1:ON:Plain	*ENG	
016	Junction Gate SOL1:ON:Thick	*ENG	
017	Junction Gate SOL1:OFF:Plain	*ENG	
018	Junction Gate SOL1:OFF:Thick	*ENG	

1950	[Fan Cooling Time Set]		
	Adjust the rotation time for each fan motor after a job end.		
002	Fusing Exit Fan	*ENG	[0 to 120 / **0** / 0.1 min./step]
006	Main Suction Fan	*ENG	
007	Paper Exit Fan	*ENG	
008	PSU Fan	*ENG	
009	Fusing IH Coil Fan	*ENG	
010	IH Power Supply Fan	*ENG	
011	Second Duct Fan	*ENG	
012	Third Duct Fan	*ENG	

WWW.SERVICE-MANUAL.NET

1951	[Fan Start Time Set]		
	Adjust the start time for each fan motor after a job end.		
002	Fusing Exit Fan	*ENG	[0 to 900 / **0** / 1 sec/step]
006	Main Suction Fan	*ENG	[0 to 900 / **120** / 1 sec/step]
007	Paper Exit Fan	*ENG	[0 to 900 / **0** / 1 sec/step]
008	PSU Fan	*ENG	[0 to 900 / **120** / 1 sec/step]
009	Fusing IH Coil Fan	*ENG	[0 to 900 / **0** / 1 sec/step]
010	IH Power Supply Fan	*ENG	
011	Second Duct Fan	*ENG	
012	Third Duct Fan	*ENG	

1952	[Fan Control Off Mode Time Set]		
001	-	*ENG	[0 to 60 / **10** / 1 min./step]

1953	[Extra Fan Control]		
001	Extra Fan Cooling State	*ENG	[0 or 1 / **0** / 1 /step] 0: Off, 1: On
	Displays the extra fan cooling is On or Off.		
002	Extra Fan Cooling: Time: Threshold	*ENG	[0 to 180 / **C2.5c: 80, C2.5d: 65** / 1 min./step]
	Specifies the judgement time for entering the extra fan rotation mode.		
003	Extra Fan Cooling: Rotat: Threshold	*ENG	[0 to 999999999 / **C2.5c: 811260, C2.5d: 830520** / 1 mm/step]
	Specifies the threshold rotation of the black development unit for entering the extra fan rotation mode.		
004	Extra Fan Cooling: Start Date	*ENG	Displays the execution time and date of the extra fan cooling.

WWW.SERVICE-MANUAL.NET

005	Extra Fan Cooling Time	*ENG	[0 to 120 / **30** / 0.1 min./step:
	Specifies the execution time for the extra fan cooling.		

1954	[Extra Fan Control]		
	Specifies the execution time of the extra fan rotaion mode for each fan motor.		
002	Fan Cooling Time:Fusing Exit Fan:Initial	*ENG	[0 to 120 / **0** / 0.1 min./step]
006	Fan Cooling Time:Main Suction Fan:Initial	*ENG	[0 to 120 / **0** / 0.1 min./step]
007	Fan Cooling Time:Paper Exit Fan:Initial	*ENG	[0 to 120 / **0** / 0.1 min./step]
008	Fan Cooling Time:PSU Fan:Initial	*ENG	[0 to 120 / **0** / 0.1 min./step]
009	Fan Cooling Time:Fusing IH Coil Fan:Initial	*ENG	[0 to 120 / **0** / 0.1 min./step]
010	Fan Cooling Time:IH Power Supply Fan:Initial	*ENG	[0 to 120 / **0** / 0.1 min./step]
011	Fan Cooling Time:Second Duct Fan:Initial	*ENG	[0 to 120 / **0** / 0.1 min./step]
012	Fan Cooling Time:Third Duct Fan:Initial	*ENG	[0 to 120 / **0** / 0.1 min./step]

WWW.SERVICE-MANUAL.NET

3.2 SYSTEM SP2-XXX

3.2.1 SP2-XXX (DRUM)

2005	[Charge DC Voltage] Charge Roller DC Voltage Adjustment (Paper Type, Process Speed, Color) Paper Type –> Plain, Thick 1, Thick 2 Plain: High speed, Thick 1: Middle speed, Thick 2&FINE: Low speed		
	Adjusts the DC component of the charge roller bias in the various print modes. Charge bias (DC component) is automatically adjusted during process control; therefore, adjusting these settings does not effect while process control mode (SP3-041-1 Default: ON) is activated. When deactivating process control mode with SP3-041-1, the values in these SP modes are used for printing.		
001	Plain: Bk	*ENG	[0 to 1000 / **690** / 10 –V/step]
002	Plain: M	*ENG	
003	Plain: C	*ENG	
004	Plain: Y	*ENG	
005	Thick 1: Bk	*ENG	
006	Thick 1: M	*ENG	
007	Thick 1: C	*ENG	
008	Thick 1: Y	*ENG	
009	Thick 2&FINE: Bk	*ENG	
010	Thick 2&FINE: M	*ENG	
011	Thick 2&FINE: C	*ENG	
012	Thick 2&FINE: Y	*ENG	
	[Charge DC: Correction]		
013	PCU:Plain	*ENG	[–100 to 100 / **C2.5c: –26, C2.5d: –28** / 1 –V/step]

WWW.SERVICE-MANUAL.NET

014	PCU:Thick 1	*ENG	[–100 to 100 / **-29** / 1 –V/step]
015	PCU:Thick 2&FINE	*ENG	[–100 to 100 / **-28** / 1 –V/step]
016	HVP:Plain	*ENG	[–100 to 100 / **C2.5c: 25, C2.5d: 24** / 1 –V/step]
017	HVP:Thick 1	*ENG	[–100 to 100 / **20** / 1 –V/step]
018	HVP: Thick 2&FINE	*ENG	[–100 to 100 / **29** / 1 –V/step]

2006	[Charge AC Voltage] Charge Roller AC Voltage Adjustment (Paper Type, Process Speed, Color) Paper Type –> Plain, Thick 1, Thick 2 Plain: High speed, Thick 1: Middle speed, Thick 2&FINE: Low speed		
	Adjusts the AC component of the charge roller bias in the various print modes. Charge bias (AC component) is adjusted by environment correction (SP2-007-xxx to SP2-011-xxx). These SPs are activated only when SP2-012-1 is set to "1: manual control".		
001	Plain: Bk	*ENG	[0 to 3 / **1.9** / 0.01 KV/step]
002	Plain: M	*ENG	[0 to 3 / **2.2** / 0.01 KV/step]
003	Plain: C	*ENG	[0 to 3 / **2.2** / 0.01 KV/step]
004	Plain: Y	*ENG	[0 to 3 / **2.2** / 0.01 KV/step]
005	Thick 1: Bk	*ENG	[0 to 3 / **1.9** / 0.01 KV/step]
006	Thick 1: M	*ENG	[0 to 3 / **2.2** / 0.01 KV/step]
007	Thick 1: C	*ENG	[0 to 3 / **2.2** / 0.01 KV/step]
008	Thick 1: Y	*ENG	[0 to 3 / **2.2** / 0.01 KV/step]
009	Thick 2&FINE: Bk	*ENG	[0 to 3 / **1.9** / 0.01 KV/step]
010	Thick 2&FINE: M	*ENG	[0 to 3 / **2.2** / 0.01 KV/step]
011	Thick 2&FINE: C	*ENG	[0 to 3 / **2.2** / 0.01 KV/step]
012	Thick 2&FINE: Y	*ENG	[0 to 3 / **2.2** / 0.01 KV/step]

WWW.SERVICE-MANUAL.NET

2007	[Charge AC Current: LL] Charge Roller AC Current Adjustment for LL (Color)		
	Displays/sets the AC current target of the charge roller for LL environment (Low temperature and Low humidity). **DFU**		
001	Environmental Target: Bk	*ENG	[0 to 3 / **C2.5c: 0.89, C2.5d: 1.31** / 0.01 mA/step]
002	Environmental Target: M	*ENG	[0 to 3 / **C2.5c: 1.03, C2.5d: 1.6** / 0.01 mA/step]
003	Environmental Target: C	*ENG	
004	Environmental Target: Y	*ENG	

2008	[Charge AC Current: ML] Charge Roller AC Current Adjustment for MM (Color)		
	Displays/sets the AC current target of the charge roller for ML environment (Meddle temperature and Low humidity). **DFU**		
001	Environmental Target: Bk	*ENG	[0 to 3 / **C2.5c: 0.91, C2.5d: 1.31** / 0.01 mA/step]
002	Environmental Target: M	*ENG	[0 to 3 / **C2.5c: 1.03, C2.5d: 1.58** / 0.01 mA/step]
003	Environmental Target: C	*ENG	
004	Environmental Target: Y	*ENG	

2009	[Charge AC Current: MM] Charge Roller AC Current Adjustment for MM (Color)		
	Displays/sets the AC current target of the charge roller for MM environment (Middle temperature and Middle humidity). **DFU**		
001	Environmental Target: Bk	*ENG	[0 to 3 / **C2.5c: 0.92, C2.5d: 1.28** / 0.01 mA/step]
002	Environmental Target: M	*ENG	[0 to 3 / **C2.5c: 1.07, C2.5d: 1.55** / 0.01 mA/step]
003	Environmental Target: C	*ENG	
004	Environmental Target: Y	*ENG	

WWW.SERVICE-MANUAL.NET

2010	[Charge AC Current: MH] Charge Roller AC Current Adjustment for MH (Color)		
	Displays/sets the AC current target of the charge roller for MH environment (Middle temperature and High humidity). **DFU**		
001	Environmental Target: Bk	*ENG	[0 to 3 / **C2.5c: 0.92, C2.5d: 1.26** / 0.01 mA/step]
002	Environmental Target: M	*ENG	[0 to 3 / **C2.5c: 1.15, C2.5d: 1.65** / 0.01 mA/step]
003	Environmental Target: C	*ENG	
004	Environmental Target: Y	*ENG	

2011	[Charge AC Current: HH] Charge Roller AC Current Adjustment for HH (Color)		
	Displays/sets the AC current target of the charge roller for HH environment (High temperature and High humidity). **DFU**		
001	Environmental Target: Bk	*ENG	[0 to 3 / **C2.5c: 0.91, C2.5d: 1.24** / 0.01 mA/step]
002	Environmental Target: M	*ENG	[0 to 3 / **C2.5c: 1.15, C2.5d: 1.65** / 0.01 mA/step]
003	Environmental Target: C	*ENG	
004	Environmental Target: Y	*ENG	

2012	[Charge Output Control]		
001	AC Voltage	*ENG	Selects the AC voltage control type. [0 or 1 / **0** / 1 /step] 0: Process control 1: Manual control (AC voltages are decided with SP2006.)

WWW.SERVICE-MANUAL.NET

2013	[Environmental Correction: PCU]		
001	Current Environmental: Display	*ENG	Displays the environmental condition, which is measured in absolute humidity. [1 to 5 / **–** / 1 /step] 1: LL (LL <= 4.3 g/m^3) 2: ML (4.3 < ML <= 11.3 g/m^3) 3: MM (11.3 < MM <= 18.0 g/m^3) 4: MH (18.0 < MH <= 24.0 g/m^3) 5: HH (24.0 g/m^3 < HH)
002	Forced Setting	*ENG	Selects the environmental condition manually. [0 to 5 / **0** / 1 /step] 0: The environmental condition is determined automatically. 1: LL, 2: ML, 3: MM, 4: MH, 5: HH
003	Absolute Humidity: Threshold 1	*ENG	Changes the humidity threshold between LL and ML. [0 to 100 / **3.0** / 0.01 g/m^3/step]
004	Absolute Humidity: Threshold 2	*ENG	Changes the humidity threshold between ML and MM. [0 to 100 / **8.0** / 0.01 g/m^3/step]
005	Absolute Humidity: Threshold 3	*ENG	Changes the humidity threshold between MM and MH. [0 to 100 / **15.0** / 0.01 g/m^3/step]
006	Absolute Humidity: Threshold 4	*ENG	Changes the humidity threshold between MH and HH. [0 to 100 / **15.0** / 0.01 g/m^3/step]
007	Current Temp.: Display	*ENG	Displays the current temperature. [0 to 100 / **0** / 1 deg/step]

WWW.SERVICE-MANUAL.NET

008	Current Relative Humidity FC: Display	*ENG	Displays the current relative humidity. [0 to 100 / **0** / 1%RH/step]
009	Current Absolute Humidity FC: Display	*ENG	Displays the absolute humidity. [0 to 100 / **0** / 0.01 g/m^3/step]
010	Previous Environmental Bk: Display	*ENG	Displays the previous environmental condition, which is measured in absolute humidity. [1 to 5 / **–** / 1 /step] 1: LL, 2: ML, 3: MM, 4: MH, 5: HH
011	Previous Temp Bk: Display	*ENG	Displays the previous temperature. [0 to 100 / **0** / 1 deg/step]
012	Previous Relative Humidity Bk: Display	*ENG	Displays the previous relative humidity. [0 to 100 / **0** / 1%RH/step]
013	Previous Absolute Humidity Bk: Display	*ENG	Displays the previous absolute humidity. [0 to 100 / **0** / 0.01 g/m^3/step]

2014	[Charge AC Control: Setting] **DFU**		
	Specifies the charge AC control interval or thresholod for each condition.		
001	Exec Interval: Power ON	*ENG	[0 to 2000 / **500** / 1 page/step]
002	Exec Interval: Print	*ENG	
003	Page Interval	*ENG	[0 to 500 / **10** / 5 page/step]
004	Temperature	*ENG	[0 to 99 / **99** / 1 deg/step]
005	Relative Humidity	*ENG	[0 to 99 / **50** / 1 %RH/step]
006	Absolute Humidity	*ENG	[0 to 99 / **12** / 1 g/m^3/step]
007	Temp Threshold M	*ENG	[0 to 99 / **5** / 1 deg/step]
008	RH Threshold M	*ENG	[0 to 99 / **25** / 1 %RH/step]

WWW.SERVICE-MANUAL.NET

009	AH Threshold M	*ENG	[0 to 99 / **6** / 1 g/m^3/step]
010	Temp Threshold S	*ENG	[0 to 20 / **1** / 0.1 deg/step]
011	RH Threshold S	*ENG	[0 to 50 / **5** / 1 %RH/step]
012	AH Threshold S	*ENG	[0 to 20 / **1** / 0.1 g/m^3/step]
013	Non-use Time	*ENG	[0 to 1440 / **360** / 10 min/step]

2015	[Charge AC Adj: Result]		
001	Bk	*ENG	[0 to 9 / **0** / 1 /step] 0: Success 1: Out of tolerance range 2: Out of adjustable range 3: Adjustment incompleted
002	M	*ENG	
003	C	*ENG	
004	Y	*ENG	

2101	[Color Registration Correction] **FA**		
	These values are the parameters for the automatic line position adjustment and are adjusted at the factory. However, you must input a value for SP2101-001 after replacing the laser optics housing unit. For details, see "Laser Optics Housing Unit" in the "Replacement and Adjustment" section. The value should be provided with the new laser optics housing unit.		
001	Main Dot: Bk	*ENG	[–512 to 511 / **0** / 1 dot/step]
002	Main Dot: Ma	*ENG	
003	Main Dot: Cy	*ENG	
004	Main Dot: Ye	*ENG	
005	Sub Line: Bk	*ENG	[–16384 to 16383 / **0** / 1 line/step]
006	Sub Line: Ma	*ENG	
007	Sub Line: Cy	*ENG	
008	Sub Line: Ye	*ENG	

WWW.SERVICE-MANUAL.NET

2102	[Magnification Adjustment] **DFU**		
001	Main Mag.: High Speed: Bk	*ENG	These are results of the main scan length adjustment. [0 to 560 / **280** / 1 /step]
002	Main Mag.: Medium Speed: Bk	*ENG	
003	Main Mag.: Low Speed: Bk	*ENG	
004	Main Mag.: High Speed: M	*ENG	These are results of the main scan length adjustment. [0 to 560 / **280** / 1 /step]
005	Main Mag.: Medium Speed: M	*ENG	
006	Main Mag.: Low Speed: M	*ENG	
007	Main Mag.: High Speed: C	*ENG	These are results of the main scan length adjustment. [0 to 560 / **280** / 1 /step]
008	Main Mag.: Medium Speed: C	*ENG	
009	Main Mag.: Low Speed: C	*ENG	
010	Main Mag.: High Speed: Y	*ENG	These are results of the main scan length adjustment. [0 to 560 / **280** / 1 /step]
011	Main Mag.: Medium Speed: Y	*ENG	
012	Main Mag.: Low Speed: Y	*ENG	
013	Offset: Mag Bk1-2	*ENG	[-256 to 255 / **0** / 1 sub-dot/step]
014	Offset: Mag M1-2	*ENG	
015	Offset: Mag C1-2	*ENG	
016	Offset: Mag Y1-2	*ENG	

WWW.SERVICE-MANUAL.NET

2103	[Erase Margin Adjustment] (Area, Paper Size)		
	Adjusts the erase margin by deleting image data at the margins.		
001	Lead Edge Width	*ENG	[0 to 9.9 / **4.2** / 0.1 mm/step]
002	Trail. Edge Width	*ENG	
003	Left	*ENG	[0 to 9.9 / **2** / 0.1 mm/step]
004	Right	*ENG	
006	Duplex Trail. L Size	*ENG	[0 to 4 / **1** / 0.1 mm/step]
007	Duplex Trail. M Size	*ENG	[0 to 4 / **0.8** / 0.1 mm/step]
008	Duplex Trail. S Size	*ENG	[0 to 4 / **0.6** / 0.1 mm/step]
009	Duplex Left Edge	*ENG	[0 to 1.5 / **0.3** / 0.1 mm/step]
010	Duplex Right Edge	*ENG	
011	Duplex Trail. L Size:Thick	*ENG	[0 to 4 / **1** / 0.1 mm/step]
012	Duplex Trail. M Size:Thick	*ENG	[0 to 4 / **0.8** / 0.1 mm/step]
013	Duplex Trail. S Size:Thick	*ENG	[0 to 4 / **0.6** / 0.1 mm/step]
014	Duplex Left Edge:Thick	*ENG	[0 to 1.5 / **0.3** / 0.1 mm/step]
015	Duplex Right Edge:Thick	*ENG	

WWW.SERVICE-MANUAL.NET

2105	[LD Power Adj.] (Process Speed, Color)		
	Adjusts the LD power of each color for each process speed. Each LD power setting is decided by process control.		
001	High Speed: Bk	*ENG	[50 to 120 / **100** / 1%/step] Decreasing a value makes lines thinner on the output. Increasing a value makes lines thicker on the output.
002	High Speed: Ma	*ENG	
003	High Speed: Cy	*ENG	
004	High Speed: Ye	*ENG	
005	Middle Speed: Bk	*ENG	[50 to 120 / **100** / 1%/step] Decreasing a value makes lines thinner on the output. Increasing a value makes lines thicker on the output.
006	Middle Speed: Ma	*ENG	
007	Middle Speed: Cy	*ENG	
008	Middle Speed: Ye	*ENG	
009	Low Speed: Bk	*ENG	[50 to 120 / **100** / 1%/step] Decreasing a value makes lines thinner on the output. Increasing a value makes lines thicker on the output.
010	Low Speed: Ma	*ENG	
011	Low Speed: Cy	*ENG	
012	Low Speed: Ye	*ENG	

2106	[Polygon Rotation Time]		
	Adjusts the time of the polygon motor rotation. **DFU**		
001	Warming-Up	*ENG	[0 to 60 / **10** / 1 sec/step]
002	Job End	*ENG	

WWW.SERVICE-MANUAL.NET

2107	[Image Parameter]		
	DFU		
001	Image Gamma Flag	*ENG	[0 or 1 / **1** / 1 /step]
002	Shading Correction Flag	*ENG	[0 or 1 / **1** / 1 /step]

2109	[Test Pattern]		
	Generates the test pattern using "COPY Window" tab in the LCD.		
003	Pattern Selection	-	[0 to 23 / **0** / 1/step]
	0 None 1: Vertical Line (1dot) 2: Vertical Line (2dot) 3: Horizontal (1dot) 4: Horizontal (2dot) 5: Grid Vertical Line 6: Grid Horizontal Line 7: Grid pattern Small 8: Grid pattern Large 9: Argyle Pattern Small 10: Argyle Pattern Large		11. Independent Pattern (1dot) 12. Independent Pattern (2dot) 13. Independent Pattern (4dot) 14. Trimming Area 16: Hound’s Tooth Check (Horizontal) 17: Band (Horizontal) 18: Band (Vertical) 19: Checker Flag Pattern 20: Grayscale Vertical Margin 21: Grayscale Horizontal Margin 23: Full Dot Pattern
005	Color Selection	-	Specifies the color for the test pattern. [1 to 4 / **1** / 1/step] 1: All colors, 2: Magenta, 3: Yellow, 4: Cyan
006	Density: Bk	-	Specifies the color density for the test pattern. [0 to 15 / **15** / 1 /step] 0: Lightest density 15: Darkest density
007	Density: Ma	-	
008	Density: Cy	-	
009	Density: Ye	-	

WWW.SERVICE-MANUAL.NET

2111	[Forced Line Position Adj.]		
001	Mode a	-	Executes the fine line position adjustment twice. If this SP is not completed (NG is displayed), do SP2111-003 first and then try this SP again.
002	Mode b	-	Executes the fine line position adjustment once. If this SP is not completed, do SP2111-003 first and then try this SP again.
003	Mode c	-	Executes the rough line position adjustment once. After doing this SP, make sure to execute SP2111-001 or -002. Otherwise, the line position adjustment is not perfectly done.

2112	[TM/ID Sensor Check] ID Sensor Check **FA**		
001	Execute		[0 or 1 / **0** / 1 /step] This SP is used to check the ID sensors at the factory. The results of this SP are displayed in SP2140 to SP2145.

2117	[Skew Adjustment]		
	Specifies a skew adjustment value for the skew motor M, C or Y. These SPs must be used when a new laser optics housing unit is installed or when SC2.585 occurs. For details, see "Laser Optics Housing Unit" in the "Replacement and Adjustment" section.		
001	Pulse: M	*ENG	[–50 to 50 / **0** / 1 pulse/step]
002	Pulse: C	*ENG	
003	Pulse: Y	*ENG	

WWW.SERVICE-MANUAL.NET

2118	[Skew Adjustment]		
001	Execute: M	*ENG	Changes the current skew adjustment values to the values specified with SP2117. These SPs must be used when a new laser optics housing unit is installed or when SC2.585 occurs. For details, see "Laser Optics Housing Unit" in the "Replacement and Adjustment" section.
002	Execute: C	*ENG	
003	Execute: Y	*ENG	

2119	[Skew Adjustment Display]		
	Displays the current skew adjustment value for each skew motor.		
001	M	*ENG	[–50 to 50 / **0** / 1 pulse/step]
002	C	*ENG	
003	Y	*ENG	

2120	[Thick Paper Skew Adj] **Not used**		
	Selects the skew adjustment value for thick paper.		
001	On/Off	*ENG	[0 or 1 / **1** / 1 /step] 0: Off, 1: On

2121	[Skew Adjust Coefficient]		
001	Coefficient	*ENG	[0 to 2 / **0** / 1 /step]

WWW.SERVICE-MANUAL.NET

2140	[ID Sensor Check Result] **DFU**		
	Displays the results of the ID sensor check. Bk, M, C, Y: ID sensors for the process control Front, Center, Rear: ID sensors for the automatic line position adjustment		
001	Bk	*ENG	[0 to 1024 / **0** / 1/step]
002	M	*ENG	
003	C	*ENG	
004	Y	*ENG	
005	Front	*ENG	
006	Center	*ENG	
007	Rear	*ENG	

2141	[ID Sensor Check Result: Ave.] **DFU**		
	Displays the average result values of the ID sensor check. Bk, M, C, Y: ID sensors for the process control Front, Center, Rear: ID sensors for the automatic line position adjustment		
001	Bk	*ENG	[0 to 5.5 / **0** / 0.01V/step]
002	M	*ENG	
003	C	*ENG	
004	Y	*ENG	
005	Front	*ENG	
006	Center	*ENG	
007	Rear	*ENG	

WWW.SERVICE-MANUAL.NET

2142	[ID Sensor Check Result] **DFU**		
	Displays the maximum result values of the ID sensor check. Bk, M, C, Y: ID sensors for the process control Front, Center, Rear: ID sensors for the automatic line position adjustment		
001	Maximum: Bk	*ENG	[0 to 5.5 / **0** / 0.01V/step]
002	Maximum: M	*ENG	
003	Maximum: C	*ENG	
004	Maximum: Y	*ENG	
005	Maximum: Front	*ENG	
006	Maximum: Center	*ENG	
007	Maximum: Rear	*ENG	

2143	[ID Sensor Check Result] **DFU**		
	Displays the minimum result values of the ID sensor check. Bk, M, C, Y: ID sensors for the process control Front, Center, Rear: ID sensors for the automatic line position adjustment		
001	Minimum: Bk	*ENG	[0 to 5.5 / **0** / 0.01V/step]
002	Minimum: M	*ENG	
003	Minimum: C	*ENG	
004	Minimum: Y	*ENG	
005	Minimum: Front	*ENG	
006	Minimum: Center	*ENG	
007	Minimum: Rear	*ENG	

WWW.SERVICE-MANUAL.NET

2144	[ID Sensor Check Result] **DFU**		
	Displays the maximum result 2 values of the ID sensor check. Bk, M, C, Y: ID sensors for the process control Front, Center, Rear: ID sensors for the automatic line position adjustment		
001	Maximum 2: Bk	*ENG	[0 to 5.5 / **0** / 0.01V/step]
002	Maximum 2: M	*ENG	
003	Maximum 2: C	*ENG	
004	Maximum 2: Y	*ENG	
005	Maximum 2: Front	*ENG	
006	Maximum 2: Center	*ENG	
007	Maximum 2: Rear	*ENG	

2145	[ID Sensor Check Result] **DFU**		
	Displays the minimum result 2 values of the ID sensor check. Bk, M, C, Y: ID sensors for the process control Front, Center, Rear: ID sensors for the automatic line position adjustment		
001	Minimum 2: Bk	*ENG	[0 to 5.5 / **0** / 0.01V/step]
002	Minimum 2: M	*ENG	
003	Minimum 2: C	*ENG	
004	Minimum 2: Y	*ENG	
005	Minimum 2: Front	*ENG	
006	Minimum 2: Center	*ENG	
007	Minimum 2: Rear	*ENG	

WWW.SERVICE-MANUAL.NET

2150	[Area Mag. Correction] LD Pulse Area Correction (Color, Area) **FA**		
	Adjusts the magnification for each area. The main scan (297 mm) is divided into 8 areas. Area 1 is at the front side of the machine (left side of the image) and area 8 is at the rear side of the machine (right side of the image). Decreasing a value makes the image shift to the left side on the print. Increasing a value makes the image shift to the right side on the print. 1 pulse = 1/16 dot		
027	Area 0: Bk	*ENG	[-256 to 255 / **0** / 1sub-dot/step]
028	Area 1: Bk	*ENG	Adjusts the area magnification for LD 0. [–256 to 255 / **0** / 1 sub-dot/step]
029	Area 2: Bk	*ENG	
030	Area 3: Bk	*ENG	
031	Area 4: Bk	*ENG	
032	Area 5: Bk	*ENG	
033	Area 6: Bk	*ENG	
034	Area 7: Bk	*ENG	
035	Area 8: Bk	*ENG	
036	Area 9: Bk	*ENG	Not used
037	Area 10: Bk	*ENG	
038	Area 11: Bk	*ENG	
039	Area 12: Bk	*ENG	
079	Area 0: Ma	*ENG	Not used
080	Area 1: Ma	*ENG	Adjusts the area magnification for LD 0. [–255to 255 / **0** / 1 sub-dot/step]
081	Area 2: Ma	*ENG	[–256to 255 / **0** / 1 sub-dot/step]
082	Area 3: Ma	*ENG	
083	Area 4: Ma	*ENG	

WWW.SERVICE-MANUAL.NET

084	Area 5: Ma	*ENG	
085	Area 6: Ma	*ENG	
086	Area 7: Ma	*ENG	
087	Area 8: Ma	*ENG	
088	Area 9: Ma	*ENG	Not used
089	Area 10: Ma	*ENG	
090	Area 11: Ma	*ENG	
091	Area 12: Ma	*ENG	
131	Area 0: Cy	*ENG	Not used
132	Area 1: Cy	*ENG	Adjusts the area magnification for LD 0. [–256 to 255 / **0** / 1 sub-dot/step]
133	Area 2: Cy	*ENG	
134	Area 3: Cy	*ENG	
135	Area 4: Cy	*ENG	
136	Area 5: Cy	*ENG	
137	Area 6: Cy	*ENG	
138	Area 7: Cy	*ENG	
139	Area 8: Cy	*ENG	
140	Area 9: Cy	*ENG	Not used
141	Area 10: Cy	*ENG	
142	Area 11: Cy	*ENG	
143	Area 12: Cy	*ENG	
183	Area 0: Ye	*ENG	Not used
184	Area 1: Ye	*ENG	Adjusts the area magnification for LD 0. [–256 to 255 / **0** / 1 sub-dot/step]
185	Area 2: Ye	*ENG	
186	Area 3: Ye	*ENG	

WWW.SERVICE-MANUAL.NET

187	Area 4: Ye	*ENG	
188	Area 5: Ye	*ENG	
189	Area 6: Ye	*ENG	
190	Area 7: Ye	*ENG	
191	Area 8: Ye	*ENG	
192	Area 9: Ye	*ENG	Not used
193	Area 10: Ye	*ENG	
194	Area 11: Ye	*ENG	
195	Area 12: Ye	*ENG	

2152	[Area Shad. Correct. Setting] **FA**		
	Adjusts the area correction value for each LD power. The main scan is divided into 16 areas. However, the image areas are limited from area 1 to area 14. For BK and Magenta, area 1 is at the rear side of the machine (left side of the image) and area 14 is at the front side of the machine (right side of the image). For Cyan and Yellow, area 1 is at the front side of the machine (right side of the image) and area 14 is at the rear side of the machine (left side of the image).		
001	Area 0: Bk	*ENG	This is for the synchronizing detection board. [50 to 150 / **100** / 1 %/step]
002	Area 1: Bk	*ENG	
003	Area 2: Bk	*ENG	
004	Area 3: Bk	*ENG	
005	Area 4: Bk	*ENG	
006	Area 5: Bk	*ENG	
007	Area 6: Bk	*ENG	
008	Area 7: Bk	*ENG	
009	Area 8: Bk	*ENG	

WWW.SERVICE-MANUAL.NET

010	Area 9: Bk	*ENG	
011	Area 10: Bk	*ENG	
012	Area 11: Bk	*ENG	
013	Area 12: Bk	*ENG	
014	Area 13: Bk	*ENG	
015	Area 14: Bk	*ENG	
016	Area 15: Bk	*ENG	This is out of the image area. [50 to 150 / **100** / 1 %/step]
033	Area 0: M	*ENG	This is for the synchronizing detection board.
034	Area 1: M	*ENG	[50 to 150 / **100** / 1 %/step]
035	Area 2: M	*ENG	
036	Area 3: M	*ENG	
037	Area 4: M	*ENG	
038	Area 5: M	*ENG	
039	Area 6: M	*ENG	
040	Area 7: M	*ENG	
041	Area 8: M	*ENG	
042	Area 9: M	*ENG	
043	Area 10: M	*ENG	
044	Area 11: M	*ENG	
045	Area 12: M	*ENG	
046	Area 13: M	*ENG	
047	Area 14: M	*ENG	
048	Area 15: M	*ENG	This is out of the image area. [50 to 150 / **100** / 1 %/step]

WWW.SERVICE-MANUAL.NET

065	Area 0: C	*ENG	This is for the synchronizing detection board. [50 to 150 / **100** / 1 %/step]
066	Area 1: C	*ENG	[50 to 150 / **100** / 1 %/step]
067	Area 2: C	*ENG	
068	Area 3: C	*ENG	
069	Area 4: C	*ENG	
070	Area 5: C	*ENG	
071	Area 6: C	*ENG	
072	Area 7: C	*ENG	
073	Area 8: C	*ENG	
074	Area 9: C	*ENG	
075	Area 10: C	*ENG	
076	Area 11: C	*ENG	
077	Area 12: C	*ENG	
078	Area 13: C	*ENG	
079	Area 14: C	*ENG	
080	Area 15: C	*ENG	This is out of the image area. [50 to 150 / **100** / 1 %/step]
097	Area 0: Y	*ENG	This is for the synchronizing detection board. [50 to 150 / **100** / 1 %/step]
098	Area 1: Y	*ENG	[50 to 150 / **100** / 1 %/step]
099	Area 2: Y	*ENG	
100	Area 3: Y	*ENG	
101	Area 4: Y	*ENG	
102	Area 5: Y	*ENG	

WWW.SERVICE-MANUAL.NET

103	Area 6: Y	*ENG	
104	Area 7: Y	*ENG	
105	Area 8: Y	*ENG	
106	Area 9: Y	*ENG	
107	Area 10: Y	*ENG	
108	Area 11: Y	*ENG	
109	Area 12: Y	*ENG	
110	Area 13: Y	*ENG	
111	Area 14: Y	*ENG	
112	Area 15: Y	*ENG	This is out of the image area.

2160	[Vertical Line Width] **DFU**		
	Adjusts the width of the vertical line.		
001	600dpi:Bk	*ENG	[10 to 15 / **13** / 1 /step]
002	600dpi:Ma	*ENG	[10 to 15 / **15** / 1 /step]
003	600dpi:Cy	*ENG	
004	600dpi:Ye	*ENG	
005	1200dpi:Bk	*ENG	
006	1200dpi:Ma	*ENG	
007	1200dpi:Cy	*ENG	
008	1200dpi:Ye	*ENG	
009	600dpi:Independent Dot:Bk	*ENG	
010	1200dpi:Independent Dot:Bk	*ENG	

WWW.SERVICE-MANUAL.NET

2180	[Line Position Adj. Setting Clear] **DFU**		
001	Color Regist.	-	
002	Main Scan Length Detection	-	
003	MUSIC Result	-	
004	Area Magnification Correction	-	

2181	[Line Position Adj. Result]		
	Displays the values for each correction. ▪ "Paper Int. Mag: Subdot" indicates the magnification correction value between two sheets of paper. ▪ "Mag.Cor. Subdot" indicates the magnification correction value. ▪ "M. Scan Erro." indicates the shift correction value in the main scan direction. ▪ "S. Scan Erro." Indicates the shift correction value in the sub scan direction. ▪ "M. Cor.: Dot" indicates the dot correction value in the main scan direction. ▪ "M. Cor.: Subdot" indicates the sub dot correction value in the main scan direction. ▪ Bk: Black, M: Magenta, C: Cyan, Y: Yellow		
001	Paper Int. Mag: Subdot: Bk	*ENG	[–32768 to 32767 / **0** / 1 pulse/step]
002	Mag.Cor. Subdot: Bk	*ENG	[–32768 to 32767 / **0** / 1 pulse/step]
003	Skew: M	*ENG	[–5000 to 5000 / **0** / 0.001 um/step]
005	M. Scan Erro.: Left: M	*ENG	[–5000 to 5000 / **0** / 0.001 um/step]
006	M. Scan Erro.: Center: M	*ENG	
007	M. Scan Erro.: Right: M	*ENG	
008	S. Scan Erro.: Left: M	*ENG	
009	S. Scan Erro.: Center: M	*ENG	
010	S. Scan Erro.: Right: M	*ENG	
011	M. Cor.: Dot: M	*ENG	[–512 to 511 / **0** / 1 dot/step]

WWW.SERVICE-MANUAL.NET

012	M. Cor.: Subdot: M	*ENG	[–15 to 15 / **0** / 1 pulse/step]
013	Paper Int. Mag: Subdot: M	*ENG	[–32768 to 32767 / 0 / 1 pulse/step]
014	Mag.Cor. Subdot: M	*ENG	
015	M. Left Mag.: Subdot: M	*ENG	
016	M. Right Mag.: Subdot: M	*ENG	
017	S. Cor.: 600 Line: M	*ENG	[–16384 to 16383 / **0** / 1 line/step]
018	S. Cor.: 600 Sub: M	*ENG	[–1 to 1 / **0** / 0.001 line/step]
019	S. Cor.: 1200 Line: M	*ENG	[–16384 to 16383 / **0** / 1 line/step]
020	S. Cor.: 1200 Sub: M	*ENG	[–1 to 1 / **0** / 0.001 line/step]
021	Skew: C	*ENG	[–5000 to 5000 / **0** / 0.001 um/step]
023	M. Scan Erro.: Left: C	*ENG	[–5000 to 5000 / **0** / 0.001 um/step]
024	M. Scan Erro.: Center: C	*ENG	
025	M. Scan Erro.: Right: C	*ENG	
026	S. Scan Erro.: Left: C	*ENG	
027	S. Scan Erro.: Center: C	*ENG	
028	S. Scan Erro.: Right: C	*ENG	
029	M. Cor.: Dot: C	*ENG	[–512 to 511 / **0** / 1 dot/step]
030	M. Cor.: Subdot: C	*ENG	[–15 to 15 / **0** / 1 pulse/step]
031	Paper Int. Mag: Subdot: C	*ENG	[–32768 to 32767 / **0** / 1 pulse/step]
032	Mag.Cor. Subdot: C	*ENG	
033	M. Left Mag.: Subdot: C	*ENG	
034	M. Right Mag.: Subdot: C	*ENG	
035	S. Cor.: 600 Line: C	*ENG	[–16384 to 16383 / **0** / 1 line/step]
036	S. Cor.: 600 Sub: C	*ENG	[–1 to 1 / **0** / 0.001 line/step]
037	S. Cor.: 1200 Line: C	*ENG	[–16384 to 16383 / **0** / 1 line/step]

WWW.SERVICE-MANUAL.NET

038	S. Cor.: 1200 Sub: C	*ENG	[–1 to 1 / **0** / 0.001 line/step]
039	Skew: Y	*ENG	[–5000 to 5000 / **0** / 0.001 um/step]
041	M. Scan Erro.: Left: Y	*ENG	
042	M. Scan Erro.: Center: Y	*ENG	
043	M. Scan Erro.: Right: Y	*ENG	
044	S. Scan Erro.: Left: Y	*ENG	
045	S. Scan Erro.: Center: Y	*ENG	
046	S. Scan Erro.: Right: Y	*ENG	
047	M. Cor.: Dot: Y	*ENG	[–512 to 511 / **0** / 1 dot/step]
048	M. Cor.: Subdot: Y	*ENG	[–15 to 15 / **0** / 1 pulse/step]
049	Paper Int. Mag: Subdot: Y	*ENG	[–32768 to 32767 / **0** / 1 pulse/step]
050	Mag.Cor. Subdot: Y	*ENG	
051	M. Left Mag.: Subdot: Y	*ENG	
052	M. Right Mag.: Subdot: Y	*ENG	
053	S. Cor.: 600 Line: Y	*ENG	[–16384 to 16383 / **0** / 1 line/step]
054	S. Cor.: 600 Sub: Y	*ENG	[–1 to 1 / **0** / 0.001 line/step]
055	S. Cor.: 1200 Line: Y	*ENG	[–16384 to 16383 / **0** / 1 line/step]
056	S. Cor.: 1200 Sub: Y	*ENG	[–1 to 1 / **0** / 0.001 line/step]

WWW.SERVICE-MANUAL.NET

2182	[Line Position Adj. Offset] (Color) M. Scan: Main scan, S. Scan: Sub-scan		
001	M Magnification	*ENG	Adjusts the line position manually. [-1 to 1 / **0** / 0.001%/step]
002	C Magnification	*ENG	
003	Y Magnification	*ENG	
	When line shifts are not corrected by the automatic line position adjustment, do this SP. Increasing a value reduces the image in the main scan direction. Decreasing a value enlarges the image in the main scan direction.		
004	M. Scan: High: Dot: M	*ENG	[-512 to 511 / **0** / 1 dot/step]
005	M. Scan: High: Subdot: M	*ENG	[-15 to 15 / **0** / 1 pulse/step]
006	M. Scan: Medium: Dot: M	*ENG	[-512 to 511 / **0** / 1 dot/step]
007	M. Scan: Medium: Subdot: M	*ENG	[-15 to 15 / **0** / 1 pulse/step]
008	M. Scan: Low: Dot: M	*ENG	[-512 to 511 / **0** / 1 dot/step]
009	M. Scan: Low: Subdot: M	*ENG	[-15 to 15 / **0** / 1 pulse/step]
010	M. Scan: High: Dot: C	*ENG	[-512 to 511 / **0** / 1 dot/step]
011	M. Scan: High: Subdot: C	*ENG	[-15 to 15 / **0** / 1 pulse/step]
012	M. Scan: Medium: Dot: C	*ENG	[-512 to 511 / **0** / 1 dot/step]
013	M. Scan: Medium: Subdot: C	*ENG	[-15 to 15 / **0** / 1 pulse/step]
014	M. Scan: Low: Dot: C	*ENG	[-512 to 511 / **0** / 1 dot/step]
015	M. Scan: Low: Subdot: C	*ENG	[-15 to 15 / **0** / 1 pulse/step]
016	M. Scan: High: Dot: Y	*ENG	[-512 to 511 / **0** / 1 dot/step]
017	M. Scan: High: Subdot: Y	*ENG	[-15 to 15 / **0** / 1 pulse/step]
018	M. Scan: Medium: Dot: Y	*ENG	[-512 to 511 / **0** / 1 dot/step]
019	M. Scan: Medium: Subdot: Y	*ENG	[-15 to 15 / **0** / 1 pulse/step]
020	M. Scan: Low: Dot: Y	*ENG	[-512 to 511 / **0** / 1 dot/step]

WWW.SERVICE-MANUAL.NET

021	M. Scan: Low: Subdot: Y	*ENG	[-15 to 15 / **0** / 1 pulse/step]
022	S. Scan: High: Line: M	*ENG	[-16384 to 16383 / **0** / 1 line/step]
023	S. Scan: High: Subline: M	*ENG	[–1 to 1 / **0** / 0.001 /line]
024	S. Scan: Medium: Line: M	*ENG	[-16384 to 16383 / **0** / 1 line/step]
025	S. Scan: Medium: Subline: M	*ENG	[–1 to 1 / **0** / 0.001 /line]
026	S. Scan: Low: Line: M	*ENG	[-16384 to 16383 / **0** / 1 line/step]
027	S. Scan: Low: Subline: M	*ENG	Not used
028	S. Scan: High: Line: C	*ENG	[-16384 to 16383 / **0** / 1 line/step]
029	S. Scan: High: Subline: C	*ENG	[–1 to 1 / **0** / 0.001 /line]
030	S. Scan: Medium: Line: C	*ENG	[-16384 to 16383 / **0** / 1 line/step]
031	S. Scan: Medium: Subline: C	*ENG	[–1 to 1 / **0** / 0.001 /line]
032	S. Scan: Low: Line: C	*ENG	[-16384 to 16383 / **0** / 1 line/step]
033	S. Scan: Low: Subline: C	*ENG	Not used
034	S. Scan: High: Line: Y	*ENG	[-16384 to 16383 / **0** / 1 line/step]
035	S. Scan: High: Subline: Y	*ENG	[–1 to 1 / **0** / 0.001 /line]
036	S. Scan: Medium: Line: Y	*ENG	[-16384 to 16383 / **0** / 1 line/step]
037	S. Scan: Medium: Subline: Y	*ENG	[–1 to 1 / **0** / 0.001 /line]
038	S. Scan: Low: Line: Y	*ENG	[-16384 to 16383 / **0** / 1 line/step]
039	S. Scan: Low: Subline: Y	*ENG	Not used

WWW.SERVICE-MANUAL.NET

2183	[Main Scan Length Detection] **DFU**		
001	Execute: High: Bk	-	Executes the adjustment for the main scan length detection manually.
002	Execute: Medium: Bk	-	
003	Execute: Low: Bk	-	
004	Execute: High: M	-	
005	Execute: Medium: M	-	
006	Execute: Low: M	-	
007	Execute: High: C	-	
008	Execute: Medium: C	-	
009	Execute: Low: C	-	
010	Execute: High: Y	-	
011	Execute: Medium: Y	-	
012	Execute: Low: Y	-	

2184	[Main Scan Length Detection Target] **DFU**		
001	Execute: Bk	-	Executes the target value for the main scan length detection.
002	Execute: M	-	
003	Execute: C	-	
004	Execute: Y	-	

2185	[Main Scan Length Detection Disp.]
	Displays/adjusts the target value for the main scan magnification correction of the line position adjustment. After replacing the laser optics housing unit, input the standard value for Bk provided with the new unit. For details, see "Laser Optics Housing Unit" in the "Replacement Adjustment" section. It is not necessary to input the values for the other colors; these are automatically adjusted after doing the line position

WWW.SERVICE-MANUAL.NET

	adjustment.		
001	Bk	*ENG	[0 to 266667 / **249449** / 1 sub-dot/step]
002	M	*ENG	
003	C	*ENG	
004	Y	*ENG	

2186	[Main Scan Length Detection] **DFU**		
001	Selection	*ENG	[0 or 1 / **1** / 1/step] 0: Mag. Correction OFF, 1: Mag. Correction ON
	Enables or disables the main scan length detection for the laser.		
002	Paper Interval	*ENG	[0 to 999 / **1** / 1 sec/step]
	Adjusts the interval of the main scan length detection for the laser.		

2190	[Line Position Adj.] **DFU**		
001	Paper Int. Mag.: Subdot: Bk	*ENG	[0 or 1 / **1** / 1/step]
002	Paper Int. Mag.: Subdot: M	*ENG	
003	Paper Int. Mag.: Subdot: C	*ENG	
004	Paper Int. Mag.: Subdot: Y	*ENG	
005	M. Scan Mag.: Subdot: M	*ENG	[0 or 1 / **1** / 1/step] 0: Disable correction, 1: Enable correction
006	M. Scan Mag.: Subdot: C	*ENG	
007	M. Scan Mag.: Subdot: Y	*ENG	
008	Area Mag.: Subdot: M	*ENG	[0 or 1 / **1** / 1/step]
009	Area Mag.: Subdot: C	*ENG	
010	Area Mag.: Subdot: Y	*ENG	
012	Detection Error Level	*ENG	[-3500 to 3500 / **0** / 1 μm/step]

WWW.SERVICE-MANUAL.NET

2191	[MUSIC Coefficient Setting] Line Position Adjustment: Coefficient Setting **DFU** ch 0: ID sensor at rear, ch 1: ID sensor at center, ch 2: ID sensor at front		
001	ch 0: Filter: Front: a1	*ENG	[–131071 to 131071 / **125869** / 1 bit/step]
002	ch 0: Filter: Front: a2	*ENG	[–131071 to 131071 / **–60488** / 1 bit/step]
003	ch 0: Filter: Front: b0	*ENG	[–131071 to 131071 / **39** / 1 bit/step]
004	ch 0: Filter: Front: b1	*ENG	[–131071 to 131071 / **77** / 1 bit/step]
005	ch 0: Filter: Front: b2	*ENG	[–131071 to 131071 / **39** / 1 bit/step]
006	ch 0: Filter: Rear: a1	*ENG	[–131071 to 131071 / **128596** / 1 bit/step]
007	ch 0: Filter: Rear: a2	*ENG	[–131071 to 131071 / **–63398** / 1 bit/step]
008	ch 0: Filter: Rear: b0	*ENG	[–131071 to 131071 / **84** / 1 bit/step]
009	ch 0: Filter: Rear: b1	*ENG	[–131071 to 131071 / **168** / 1 bit/step]
010	ch 0: Filter: Rear: b2	*ENG	[–131071 to 131071 / **84** / 1 bit/step]
011	ch 1: Filter: Front: a1	*ENG	[–131071 to 131071 / **125869** / 1 bit/step]
012	ch 1: Filter: Front: a2	*ENG	[–131071 to 131071 / **–60488** / 1 bit/step]
013	ch 1: Filter: Front: b0	*ENG	[–131071 to 131071 / **39** / 1 bit/step]
014	ch 1: Filter: Front: b1	*ENG	[–131071 to 131071 / **77** / 1 bit/step]
015	ch 1: Filter: Front: b2	*ENG	[–131071 to 131071 / **39** / 1 bit/step]
016	ch 1: Filter: Rear: a1	*ENG	[–131071 to 131071 / **128596** / 1 bit/step]
017	ch 1: Filter: Rear: a2	*ENG	[–131071 to 131071 / **–63398** / 1 bit/step]
018	ch 1: Filter: Rear: b0	*ENG	[–131071 to 131071 / **84** / 1 bit/step]
019	ch 1: Filter: Rear: b1	*ENG	[–131071 to 131071 / **168** / 1 bit/step]
020	ch 1: Filter: Rear: b2	*ENG	[–131071 to 131071 / **84** / 1 bit/step]
021	ch 2: Filter: Front: a1	*ENG	[–131071 to 131071 / **125869** / 1 bit/step]
022	ch 2: Filter: Front: a2	*ENG	[–131071 to 131071 / **–60488** / 1 bit/step]
023	ch 2: Filter: Front: b0	*ENG	[–131071 to 131071 / **39** / 1 bit/step]

WWW.SERVICE-MANUAL.NET

024	ch 2: Filter: Front: b1	*ENG	[–131071 to 131071 / **77** / 1 bit/step]
025	ch 2: Filter: Front: b2	*ENG	[–131071 to 131071 / **39** / 1 bit/step]
026	ch 2: Filter: Rear: a1	*ENG	[–131071 to 131071 / **128596** / 1 bit/step]
027	ch 2: Filter: Rear: a2	*ENG	[–131071 to 131071 / **–63398** / 1 bit/step]
028	ch 2: Filter: Rear: b0	*ENG	[–131071 to 131071 / **84** / 1 bit/step]
029	ch 2: Filter: Rear: b1	*ENG	[–131071 to 131071 / **168** / 1 bit/step]
030	ch 2: Filter: Rear: b2	*ENG	[–131071 to 131071 / **84** / 1 bit/step]
031	Q Format Selection	*ENG	[0 to 3 / **3** / 1/step]

2192	[MUSIC Threshold Setting] Line Position Adjustment: Threshold Setting **DFU** ch 0: ID sensor at rear, ch 1: ID sensor at center, ch 2: ID sensor at front		
001	ch 0: 1st	*ENG	[0.5 to 3 / **1.2** / 0.1 V/step]
002	ch 0: 2nd	*ENG	
003	ch 0: 3rd	*ENG	
004	ch 0: 4th	*ENG	
005	ch 1: 1st	*ENG	
006	ch 1: 2nd	*ENG	
007	ch 1: 3rd	*ENG	
008	ch 1: 4th	*ENG	
009	ch 2: 1st	*ENG	
010	ch 2: 2nd	*ENG	
011	ch 2: 3rd	*ENG	
012	ch 2: 4th	*ENG	

WWW.SERVICE-MANUAL.NET

2193	[MUSIC Condition Set] Line Position Adjustment: Condition Setting		
001	Auto Execution	*ENG	[0 or 1 / **1** / 1] 0: OFF, 1: ON
	Enables/disables the automatic line position adjustment		
002	Page: Job End: BW+FC	*ENG	[0 to 999 / **500** / 1 page/step]
	Adjusts the threshold of the line position adjustment for BW and color printing mode after job end.		
003	Page: Job End: FC	*ENG	[0 to 999 / **200** / 1 page/step]
	Adjusts the threshold of the line position adjustment for color printing mode after job end.		
004	Page: Interrupt: BW+FC	*ENG	[0 to 999 / **200** / 1 page/step]
	Adjusts the threshold of the line position adjustment for BW and color printing mode during job.		
005	Page: Interrupt: FC	*ENG	[0 to 999 / **200** / 1 page/step]
	Adjusts the threshold of the line position adjustment for color printing mode during jobs.		
006	Page: Stand-By: BW	*ENG	[0 to 999 / **100** / 1 page/step]
	Adjusts the threshold of the line position adjustment for BW printing mode in stand-by mode. The line position adjustment is done when the number of outputs in BW printing mode reaches the value specified with this SP and the condition of SP2-193-008 or SP2-193-009 is satisfied.		
007	Page: Stand-By: FC	*ENG	[0 to 999 / **100** / 1 page/step]
	Adjusts the threshold of the line position adjustment for FC printing mode in stand-by mode. The line position adjustment is done when the number of outputs in color printing mode reaches the value specified with this SP and the condition of SP2-193-008 or SP2-193-009 is satisfied.		
008	Temp.	*ENG	[0 to 100 / **5** / 1deg/step]
	Adjust the temperature change threshold for the line position adjustment (Mode		

WWW.SERVICE-MANUAL.NET

	b: adjustment once). The timing for line position adjustment depends on the combinations of several conditions.		
009	Time	*ENG	[1 to 1440 / **300** / 1 minute/step]
	Adjust the time threshold for the line position adjustment (Mode b: adjustment once). The timing for line position adjustment depends on the combinations of several conditions.		
010	Magnification	*ENG	[0 to 10 / **0.1** / 0.01%/step]
	Adjusts the magnification threshold for line position adjustment. If the length of the main scan is changed by this amount since the previous MUSIC, then MSUIC is done again.		
011	Temp. 2	*ENG	[0 to 100 / **10** / 1deg/step]
	Adjust the temperature change threshold for the line position adjustment (Mode a: adjustment twice). The timing for line position adjustment depends on the combinations of several conditions.		
012	Time 2	*ENG	[1 to 9999 / **600** / 1 minute/step]
	Adjust the time threshold for the line position adjustment (Mode a: adjustment twice). The timing for line position adjustment depends on the combinations of several conditions.		
013	Page: Power ON:BW+FC	*ENG	[0 to 999 / **200** / 1 page/step]
	Adjusts the threshold of the line position adjustment for BW and FC printing mode at power-on. The line position adjustment is done when the number of outputs in BW and color printing mode reaches the value specified with this SP and the condition of SP2-193-008 or SP2-193-009 is satisfied.		

WWW.SERVICE-MANUAL.NET

2194	[MUSIC Execution Result] Line Position Adjustment: Execution Result		
001	Year	*ENG	[0 to 99 / **0** / 1 year/step]
	Displays the year of the last MUSIC execution.		
002	Month	*ENG	[1 to 12 / **1** / 1 month/step]
	Displays the month of the last MUSIC execution.		
003	Day	*ENG	[1 to 31 / **1** / 1 day/step]
	Displays the date of the last MUSIC execution.		
004	Hour	*ENG	[0 to 23 / **0** / 1 hour/step]
	Displays the time (hour) of the last MUSIC execution.		
005	Minute	*ENG	[0 to 59 / **0** / 1 minute/step]
	Displays the time (minute) of the last MUSIC execution.		
006	Temperature	*ENG	[0 to 100 / **0** / 1 deg/step]
	Displays the temperature of the last MUSIC execution.		
007	Execution Result	*ENG	[0 or 1 / **0** / 1 /step] 0: Completed successfully, 1: Failed
008	Number of Execution	*ENG	[0 to 999999 / **0** / 1 times/step]
009	Number of Failure	*ENG	[0 to 999999 / **0** / 1 times/step]
010	Error Result: M	*ENG	[0 to 9 / **0** / 1 /step] 0: Not done 1: Completed successfully 2: Cannot detect patterns 3: Fewer lines on the pattern than the target 4: Not used 5: Out of the adjustment range 6 to 9: Not used
011	Error Result: C	*ENG	
012	Error Result: Y	*ENG	

WWW.SERVICE-MANUAL.NET

2197	[MUSIC Start Time]		
	DFU		
001	MUSIC Start Time (EDT)	*ENG	[10 to 40 / **20** / 10ms/step]
002	TM Sensor Position	*ENG	[50 to 500 / **105.5** / 0.1mm/step]

2198	[Music A/D Interval]		
	ADC Trigger Counter		
001	ADC Trigger Counter	*ENG	[7.5 to 20 / **10** / 0.1 μs/step]

2199	[Music Error Time Setting]		
	DFU		
001	Error Detection Counter	*ENG	[0.5 to 3 / **2.5** / 0.1 sec /step]

2220	[Skew Origin Set]		
	Executes the skew motor initialization in the laser optics unit.		
001	M: Skew Motor	-	-
002	C: Skew Motor	-	-
003	Y: Skew Motor	-	-

WWW.SERVICE-MANUAL.NET

2221	[LD Power] LD Power Control		
	Adjusts the fixed LD power for each line speed and color. These SPs are activated only when SP3-041-002 is set to "0". Plain: High speed, Thick 1: Middle speed, Thick 2&Fine: Low speed		
001	Plain: Bk	*ENG	[0 to 200 / **100** / 1%/step] Increasing this value makes the image density darker.
002	Plain: M	*ENG	
003	Plain: C	*ENG	
004	Plain: Y	*ENG	
005	Thick 1: Bk	*ENG	
006	Thick 1: M	*ENG	
007	Thick 1: C	*ENG	
008	Thick 1: Y	*ENG	
009	Thick 2&FINE: Bk	*ENG	
010	Thick 2&FINE: M	*ENG	
011	Thick 2&FINE: C	*ENG	
012	Thick 2&FINE: Y	*ENG	

2229	[Development DC Vias] Development DC Bias Adjustment		
	Adjusts the development bias. Development bias is automatically adjusted during process control; therefore, adjusting these settings has no effect while Process Control (SP3-041-001 Default: ON) is activated. After deactivating Process Control with SP3-041-001, the values in these SP modes are used for printing. Plain: High speed, Thick 1: Middle speed, Thick 2&Fine: Low speed		
001	Plain: Bk	*ENG	[0 to 800 / **550** / 10 –V/step]
002	Plain: M	*ENG	

WWW.SERVICE-MANUAL.NET

003	Plain: C	*ENG	
004	Plain: Y	*ENG	
005	Thick 1: Bk	*ENG	
006	Thick 1: M	*ENG	
007	Thick 1: C	*ENG	
008	Thick 1: Y	*ENG	
009	Thick 2&FINE:Bk	*ENG	
010	Thick 2&FINE:M	*ENG	
011	Thick 2&FINE:C	*ENG	
012	Thick 2&FINE:Y	*ENG	

2241	[Temperature/Humidity: Display]		
	Displays the environment temperature and humidity.		
001	Temperature	-	[–1280 to 1270 / - / 0.1deg/step]
002	Relative Humidity	-	[0 to 1000 / - / 0.1 %RH/step]
003	Absolute Humidity	-	[0 to 100 / - / 0.01 g/m^3/step]

WWW.SERVICE-MANUAL.NET

2302	[Environmental Correction: Transfer] Environmental Correction: Image Transfer Belt Unit		
001	Current Environmental Display	-	Displays the current environment condition.
002	Forced Setting	*ENG	Sets the environment condition manually. [0 to 6 / **0** / 1 /step] 0: Automatic environment control 1: LL (Low temperature/ Low humidity) 2: ML (Middle temperature/ Low humidity) 3: MM (Middle temperature/ Middle humidity) 4: MH (Middle temperature/ High humidity) 5: HH (High temperature/ High humidity)
003	Absolute Humidity: Threshold 1	*ENG	Adjusts the threshold value between LL and ML. [0 to 100 / **4** / 0.01 g/m^3/step]
004	Absolute Humidity: Threshold 2	*ENG	Adjusts the threshold value between ML and MM. [0 to 100 / **8** / 0.01 g/m^3/step]
005	Absolute Humidity: Threshold 3	*ENG	Adjusts the threshold value between MM and MH. [0 to 100 / **16** / 0.01 g/m^3/step]
006	Absolute Humidity: Threshold 4	*ENG	Adjusts the threshold value between MH and HH. [0 to 100 / **24** / 0.01 g/m^3/step]
007	Temp Threshold	*ENG	[–5 to 30 / **5** / 1 deg/step]

WWW.SERVICE-MANUAL.NET

2308	[Paper Size Correction]		
	Adjusts the threshold value for the paper size correction.		
001	Threshold 1	*ENG	[0 to 350 / **297** / 1 mm/step] Threshold 1 < paper: Paper is detected as "S1" size.
002	Threshold 2	*ENG	[0 to 350 / **257** / 1 mm/step] Threshold 2 < paper < Threshold 1: Paper is detected as "S2" size.
003	Threshold 3	*ENG	[0 to 350 / **210** / 1 mm/step] Threshold 3 < paper < Threshold 2: Paper is detected as "S3" size.
004	Threshold 4	*ENG	[0 to 350 / **148** / 1 mm/step] Threshold 4 < paper < Threshold 3: Paper is detected as "S4" size. Paper < Threshold 4: Paper is detected as "S5" size.

2311	[Non Image Area: Bias]		
001	Image Transfer	*ENG	Adjusts the bias of the image transfer belt between images. This value is added to the value of the image transfer belt bias. [10 to 250 / **100** / 5 %/step]
002	Paper Transfer	*ENG	Adjusts the bias of the paper transfer roller between images. [0 to 2000 / **500** / 1 V/step]

WWW.SERVICE-MANUAL.NET

2326	[Transfer Roller CL: Bias] Transfer Roller Cleaning: Bias Adjustment		
001	Positive	*ENG	[0 to 2100 / **500** / 100 V /step]
	Adjusts the positive voltage of the paper transfer roller for cleaning the paper transfer roller.		
002	Negative	*ENG	[10 to 400 / **100** / 10 %/step]
	Adjusts the negative current of the paper transfer roller for cleaning the paper transfer roller.		
003	Positive	*ENG	[0 to 2100 / **2000** / 100 V/step]
	Adjusts the positive current limit of the paper transfer roller for cleaning the paper transfer roller.		
004	Negative	*ENG	[10 to 400 / **100** / 10 %/step]

2351	[Common: BW: Bias] Image Transfer Belt: B/W: Bias Adjustment Plain: High speed, Thick 1: Middle speed, Thick 2&Fine: Low speed		
001	ITB unit: Plain	*ENG	[0 to 80 / **C2.5c: 33, C2.5d: 41** / 1 μA]
	Adjusts the current for the image transfer belt in B/W mode for plain paper.		
002	ITB unit: Thick 1	*ENG	[0 to 80 / **25** / 1 μA]
	Adjusts the current for the image transfer belt in B/W mode for thick 1 paper.		
003	ITB unit: Thick 2 & FINE	*ENG	[0 to 80 / **12** / 1 μA]
	Adjusts the current for the image transfer belt in B/W mode for thick 2 paper or FINE mode.		

WWW.SERVICE-MANUAL.NET

2357	[Common: FC: Bias] Image Transfer Belt: Full Color: Bias Adjustment Plain: High speed, Thick 1: Middle speed, Thick 2&Fine: Low speed		
001	ITB unit: Plain: Bk	*ENG	[0 to 80 / **C2.5c: 30, C2.5d: 37** / 1 μA]
	Adjusts the current for the image transfer belt for Black in full color mode for plain paper.		
002	ITB unit: Plain: M	*ENG	[0 to 80 / **C2.5c: 33, C2.5d: 41** / 1 μA]
	Adjusts the current for the image transfer belt for Magenta in full color mode for plain paper.		
003	ITB unit: Plain: C	*ENG	[0 to 80 / **C2.5c: 30, C2.5d: 37** / 1 μA]
	Adjusts the current for the image transfer belt for Cyan in full color mode for plain paper.		
004	ITB unit: Plain: Y	*ENG	[0 to 80 / **C2.5c: 38, C2.5d: 47** / 1 μA]
	Adjusts the current for the image transfer belt for Yellow in full color mode for plain paper.		
005	ITB unit: Thick 1: Bk	*ENG	[0 to 80 / **22** / 1 μA]
	Adjusts the current for the image transfer belt for Black in full color mode for thick 1 paper.		
006	ITB unit: Thick 1: M	*ENG	[0 to 80 / **25** / 1 μA]
	Adjusts the current for the image transfer belt for Magenta in full color mode for thick 1 paper.		
007	ITB unit: Thick 1: C	*ENG	[0 to 80 / **25** / 1 μA]
	Adjusts the current for the image transfer belt for Cyan in full color mode for thick 1 paper.		
008	ITB unit: Thick 1: Y	*ENG	[0 to 80 / **28** / 1 μA]
	Adjusts the current for the image transfer belt for Yellow in full color mode for thick 1 paper.		

WWW.SERVICE-MANUAL.NET

009	ITB unit: Thick 2 & FINE: Bk	*ENG	[0 to 80 / **11** / 1 μA]
	Adjusts the current for the image transfer belt for Black in full color mode for Thick 2 and fine.		
010	ITB unit: Thick 2 & FINE: M	*ENG	[0 to 80 / **12** / 1 μA]
	Adjusts the current for the image transfer belt for Magenta in full color mode for Thick 2 and fine.		
011	ITB unit: Thick 2 & FINE: C	*ENG	[0 to 80 / **11** / 1 μA]
	Adjusts the current for the image transfer belt for Cyan in full color mode for Thick 2 and fine.		
012	ITB unit: Thick 2 & FINE: Y	*ENG	[0 to 80 / **14** / 1 μA]
	Adjusts the current for the image transfer belt for Yellow in full color mode for Thick 2 and fine.		

2360	[Common: BW Environment Correction]		
001	ITB unit: Plain	*ENG	[1 to 60 / **1** / 1 /step]
002	ITB unit: Thick 1	*ENG	
003	ITB unit: Thick 2	*ENG	
004	ITB unit: Plain: Bk	*ENG	[1 to 60 / **13**/ 1 /step]
005	ITB unit: Plain: M	*ENG	[1 to 60 / **2** / 1 /step]
006	ITB unit: Plain: C	*ENG	
007	ITB unit: Plain: Y	*ENG	
008	ITB unit: Thick 1: Bk	*ENG	[1 to 60 / **31** / 1 /step]
009	ITB unit: Thick 1: M	*ENG	[1 to 60 / **2** / 1 /step]
010	ITB unit: Thick 1: C	*ENG	
011	ITB unit: Thick 1: Y	*ENG	

WWW.SERVICE-MANUAL.NET

012	ITB unit: Thick 2: Bk	*ENG	[1 to 60 / **31** / 1 /step]
013	ITB unit: Thick 2: M	*ENG	[1 to 60 / **2** / 1 /step]
014	ITB unit: Thick 2: C	*ENG	[1 to 60 / **1** / 1 /step]
015	ITB unit: Thick 2: Y	*ENG	[1 to 60 / **2** / 1 /step]

2401	[Plain: Bias]		
	Adjusts the DC voltage of the discharge plate for plain paper. Plain: High speed, Thick 1: Middle speed, Thick 2&Fine: Low speed		
001	Separation DC: Plain: 1st Side	*ENG	[0 to 4000 / **0** / 10 –V/step]
002	Separation DC: Plain: 2nd Side	*ENG	[0 to 4000 / **0** / 10 –V/step]
003	Separation DC: 1200: 1st Page	*ENG	[0 to 4000 / **0** / 10 –V/step]
004	Separation DC: 1200: 2nd side	*ENG	[0 to 4000 / **0** / 10 –V/step]

2403	[Plain: Bias: BW]		
	Adjusts the current for the paper transfer roller for plain paper in black-and-white mode. Plain: High speed, Thick 1: Middle speed, Thick 2&Fine: Low speed		
001	Paper Transfer: Plain: 1st Side	*ENG	[0 to 250 / **C2.5c: 30, C2.5d: 38** / 1 –μA /step]
002	Paper Transfer: Plain: 2nd Side	*ENG	
003	Paper Transfer: 1200: 1st Side	*ENG	[0 to 250 / **7** / 1 –μA /step]
004	Paper Transfer: 1200: 2nd Side	*ENG	[0 to 250 / **12** / 1 –μA /step]

WWW.SERVICE-MANUAL.NET

2407	[Plain: Bias: FC]		
	Adjusts the current for the paper transfer roller for plain paper in full color mode. Plain: High speed, Thick 1: Middle speed, Thick 2&Fine: Low speed		
001	Paper Transfer: Plain: 1st Side	*ENG	[0 to 250 / **C2.5c: 36, C2.5d: 44** / 1 –μA /step]
002	Paper Transfer: Plain: 2nd Side	*ENG	[0 to 250 / **C2.5c: 45, C2.5d: 55** / 1 –μA /step]
003	Paper Transfer: 1200: 1st Side	*ENG	[0 to 250 / **10** / 1 –μA /step]
004	Paper Transfer: 1200: 2nd Side	*ENG	[0 to 250 / **12** / 1 –μA /step]

2411	[Plain: Paper Size Correction]		
	Adjusts the size correction coefficient for the paper transfer roller current for each paper size. SP2403 and SP2407 are multiplied by these SP values. Plain: High speed, Thick 1: Middle speed, Thick 2&Fine: Low speed		
001	Paper Transfer: Plain : 1st Side: S1	*ENG	[100 to 600 / **100** / 5%/step] S1 size > 297 mm (Paper width)
002	Paper Transfer: Plain: 2nd Side: S1	*ENG	
003	Paper Transfer: 1200: 1st Side: S1	*ENG	
004	Paper Transfer: 1200: 2nd Side: S1	*ENG	
005	Paper Transfer: Plain: 1st Side: S2	*ENG	[100 to 600 / **105** / 5%/step] 297 mm > S2 size > 275 mm (Paper width)
006	Paper Transfer: Plain: 2nd Side: S2	*ENG	[100 to 600 / **120** / 5%/step] 297 mm > S2 size > 275 mm (Paper width)

WWW.SERVICE-MANUAL.NET

007	Paper Transfer: 1200: 1st Side: S2	*ENG	[100 to 600 / **120** / 5%/step] 297 mm > S2 size > 275 mm (Paper width)
008	Paper Transfer: 1200: 2nd Side: S2	*ENG	[100 to 600 / **150** / 5%/step]
009	Paper Transfer: Plain: 1st Side: S3	*ENG	[100 to 600 / **110** / 5%/step] 275 mm > S3 size > 210 mm (Paper width)
010	Paper Transfer: Plain: 2nd Side: S3	*ENG	[100 to 600 / **140** / 5%/step] 275 mm > S3 size > 210 mm (Paper width)
011	Paper Transfer: 1200: 1st Side: S3	*ENG	
012	Paper Transfer: 1200: 2nd Side: S3	*ENG	[100 to 600 / **300** / 5%/step]
013	Paper Transfer: Plain: 1st Side: S4	*ENG	[100 to 600 / **115** / 5%/step] 210 mm > S4 size > 148 mm (Paper width)
014	Paper Transfer: Plain: 2nd Side: S4	*ENG	[100 to 600 / **160** / 5%/step] 210 mm > S4 size > 148 mm (Paper width)
015	Paper Transfer: 1200: 1st Side: S4	*ENG	[100 to 600 / **240** / 5%/step] 210 mm > S4 size > 148 mm (Paper width)
016	Paper Transfer: 1200: 2nd Side: S4	*ENG	[100 to 600 / **340** / 5%/step]
017	Paper Transfer: Plain: 1st Side: S5	*ENG	[100 to 600 / **120** / 5%/step] 148 mm > S5 size (Paper width)
018	Paper Transfer: Plain: 2nd Side: S5	*ENG	[100 to 600 / **180** / 5%/step] 148 mm > S5 size (Paper width)
019	Paper Transfer: 1200: 1st Side: S5	*ENG	[100 to 600 / **300** / 5%/step] 148 mm > S5 size (Paper width)

WWW.SERVICE-MANUAL.NET

020	Paper Transfer: 1200: 2nd Side: S5	*ENG	[100 to 600 / **400** / 5%/step]

2421	[Plain: Leading Edge Correction] Plain Paper: Leading Edge Correction		
	Adjusts the correction to the paper transfer roller current at the paper leading edge in each mode. SP2403 and SP2407 are multiplied by these SP values. Note ▪ The paper leading edge area can be adjusted with SP2422.		
001	Paper Transfer: Plain: 1st Side	*ENG	[0 to 400 / **100** / 5%/step]
002	Paper Transfer: Plain: 2nd Side	*ENG	[0 to 400 / **100** / 5%/step]
003	Paper Transfer: 1200: 1st Side	*ENG	[0 to 400 / **100** / 5%/step]
004	Paper Transfer: 1200: 2nd Side	*ENG	
2421 005-008	Adjusts the correction to the discharge plate current at the paper leading edge in each mode. SP2401 is multiplied by these SPs values. Note ▪ The paper leading edge area can be adjusted with SP2422.		
005	Separation DC: Plain: 1st Side	*ENG	[0 to 400 / **100** / 5%/step]
006	Separation DC: Plain: 2nd Side	*ENG	
007	Separation DC: 1200: 1st Side	*ENG	
008	Separation DC: 1200: 2nd Side	*ENG	

WWW.SERVICE-MANUAL.NET

2422	[Plain: Switch Timing: Lead. Edge]		
	Adjusts the bias/ voltage switch timing of the paper transfer roller/ discharge plate at the paper leading edge between the erase margin area and the image area. Plain: High speed, Thick 1: Middle speed, Thick 2&Fine: Low speed		
001	Paper Transfer: Plain: 1st Side	*ENG	[0 to 50 / **0** / 2 mm/step]
002	Paper Transfer: Plain: 2nd Side	*ENG	
003	Paper Transfer: 1200: 1st Side	*ENG	
004	Paper Transfer: 1200: 2nd Side	*ENG	
005	Separation DC: Plain: 1st Side	*ENG	
006	Separation DC: Plain: 2nd Side	*ENG	
007	Separation DC: 1200: 1st Side	*ENG	
008	Separation DC: 1200: 2nd Side	*ENG	

WWW.SERVICE-MANUAL.NET

2423	[Plain: Trailing Edge Correction] Plain Paper: Trailing Edge Correction		
	Adjusts the correction coefficient to the paper transfer roller current for the paper trailing edge in each mode. SP2403 and SP2407 are multiplied by these SP values. Note ▪ The paper trailing edge area can be adjusted with SP2424.		
001	Paper Transfer: Plain: 1st Side	*ENG	[0 to 400 / **100** / 5%/step]
002	Paper Transfer: Plain: 2nd Side	*ENG	
003	Paper Transfer: 1200: 1st Side	*ENG	
004	Paper Transfer: 1200: 2nd Side	*ENG	
005	Separation DC: Plain: 1st Side	*ENG	
006	Separation DC: Plain: 2nd Side	*ENG	
007	Separation DC: 1200: 1st Side	*ENG	
008	Separation DC: 1200: 2nd Side	*ENG	

WWW.SERVICE-MANUAL.NET

2424	[Plain: Switch Timing: Trail. Edge]		
	Adjusts the bias/voltage switch timing of the paper transfer roller/discharge plate at the paper trailing edge between the erase margin area and the image area. Plain: High speed, Thick 1: Middle speed, Thick 2&Fine: Low speed		
001	Paper Transfer: Plain: 1st Side	*ENG	[0 to 50 / **0** / 2 mm/step]
002	Paper Transfer: Plain: 2nd Side	*ENG	
003	Paper Transfer: 1200: 1st Side	*ENG	
004	Paper Transfer: 1200: 2nd side	*ENG	
005	Separation DC: Plain: 1st Side	*ENG	
006	Separation DC: Plain: 2nd Side	*ENG	
007	Separation DC: 1200: 1st Side	*ENG	
008	Separation DC: 1200: 2nd Side	*ENG	

2430	[Plain: Environment Correction] **DFU** Plain: High speed, Thick 1: Middle speed, Thick 2&Fine: Low speed		
001	Separation DC: Plain: 1st Side	*ENG	[1 to 60 / **26** / 1 /step]
002	Separation DC: Plain: 2nd Side	*ENG	[1 to 60 / **32** / 1 /step]
003	Paper Transfer: BW: 1st Side	*ENG	[1 to 60 / **1** / 1 /step]
004	Paper Transfer: BW: 2nd Side	*ENG	[1 to 60 / **11** / 1 /step]
005	Paper Transfer: FC: 1st Side	*ENG	[1 to 60 / **39** / 1 /step]
006	Paper Transfer: FC: 2nd Side	*ENG	[1 to 60 / **14** / 1 /step]
007	Separation DC: 1200: 1st Side	*ENG	[1 to 60 / **26** / 1 /step]
008	Separation DC: 1200: 2nd Side	*ENG	[1 to 60 / **32** / 1 /step]
009	Paper Transfer: 1200: BW: 1st Side	*ENG	[1 to 60 / **11** / 1 /step]
010	Paper Transfer: 1200: BW: 2nd Side	*ENG	

WWW.SERVICE-MANUAL.NET

011	Paper Transfer: 1200: FC: 1st Side	*ENG	[1 to 60 / **49** / 1 /step]
012	Paper Transfer: 1200: FC: 2nd Side	*ENG	

2451	[Thin: Bias]		
	Adjusts the DC voltage of the discharge plate for thin paper. Plain: High speed, Thick 1: Middle speed, Thick 2&Fine: Low speed		
001	Separation DC: Plain: 1st Side	*ENG	[0 to 4000 / **0** / 10 –V/step]
003	Separation DC: 1200: 1st Side	*ENG	

2453	[Thin: Bias: BW]		
	Adjusts the current for the paper transfer roller for thin paper in black-and-white mode. Plain: High speed, Thick 1: Middle speed, Thick 2&Fine: Low speed		
001	Paper Transfer: Plain: 1st Side	*ENG	[0 to 250 / **C2.5c: 30, C2.5d: 38** / 1 –μA /step]
003	Paper Transfer: 1200: 1st Side	*ENG	[0 to 250 / **11** / 1 –μA /step]

2457	[Thin: Bias: FC]		
	Adjusts the current for the paper transfer roller for thin paper in full color mode. Plain: High speed, Thick 1: Middle speed, Thick 2&Fine: Low speed		
001	Paper Transfer: Plain: 1st Side	*ENG	[0 to 250 / **C2.5c: 40, C2.5d: 50** / 1 –μA /step]
003	Paper Transfer: 1200: 1st Side	*ENG	[0 to 250 / **15** / 1 –μA /step]

WWW.SERVICE-MANUAL.NET

2461	[Thin: Paper Size Correction]		
	Adjusts the size correction coefficient for the paper transfer roller current for each paper size. SP2453 and SP2457 are multiplied by these SP values. Plain: High speed		
001	Paper Transfer: Plain: 1st Side: S1	*ENG	[100 to 600 / **100** / 5%/step] S1 size > 297 mm (Paper width)
005	Paper Transfer: Plain: 1st Side: S2	*ENG	[100 to 600 / **120** / 5%/step] 297 mm > S2 size > 275 mm (Paper width)
009	Paper Transfer: Plain: 1st Side: S3	*ENG	[100 to 600 / **140** / 5%/step] 297 mm > S2 size > 275 mm (Paper width)
013	Paper Transfer: Plain: 1st Side: S4	*ENG	[100 to 600 / **160** / 5%/step] 297 mm > S2 size > 275 mm (Pape r width)
017	Paper Transfer: Plain: 1st Side: S5	*ENG	[100 to 600 / **180** / 5%/step]

2471	[Thin: Leading Edge Correction] Thin Paper: Leading Edge Correction		
	Adjusts the correction to the paper transfer roller current at the paper leading edge in each mode. SP2453 and SP2457 are multiplied by these SP values. Plain: High speed, 1200: Low speed Note ▪ The paper leading edge area can be adjusted with SP2472.		
001	Paper Transfer: Plain: 1st Side	*ENG	[0 to 400 / **100** / 5%/step]
003	Paper Transfer: 1200: 1st Side	*ENG	
2471	Adjusts the correction to the discharge plate current at the paper leading edge in each mode. SP2451 is multiplied by these SP values. Note ▪ The paper leading edge area can be adjusted with SP2472.		

WWW.SERVICE-MANUAL.NET

005	Separation DC: Plain: 1st Side	*ENG	[0 to 400 / **100** / 5%/step]
007	Separation DC: 1200: 1st Side	*ENG	

2472	[Thin: Switch Timing: Lead. Edge]		
	Adjusts the bias/ voltage switch timing of the paper transfer roller/ discharge plate at the paper leading edge between the erase margin area and the image area. Plain: High speed, 1200: Low speed,		
001	Paper Transfer: Plain: 1st Side	*ENG	[0 to 50 / **0** / 2 mm/step]
003	Paper Transfer: 1200: 1st Side	*ENG	
005	Separation DC: Plain: 1st Side	*ENG	
007	Separation DC: 1200: 1st Side	*ENG	

2473	[Thin: Trailing Edge Correction] Thin Paper: Trailing Edge Correction		
	Adjusts the correction coefficient to the paper transfer roller current for the paper trailing edge in each mode. SP2453 and SP2457 are multiplied by these SP values. Plain: High speed, 1200: Low speed Note ▪ The paper trailing edge area can be adjusted with SP2474.		
001	Paper Transfer: Plain: 1st Side	*ENG	[0 to 400 / **100** / 5%/step]
003	Paper Transfer: 1200: 1st Side	*ENG	[0 to 400 / **100** / 5%/step]
005	Separation DC: Plain: 1st Side	*ENG	[0 to 400 / **100** / 5%/step]
007	Separation DC: 1200: 1st Side	*ENG	[0 to 400 / **100** / 5%/step]

WWW.SERVICE-MANUAL.NET

2474	[Thin: Switch Timing: Trail. Edge]		
	Adjusts the bias/voltage switch timing of the paper transfer roller/discharge plate at the paper trailing edge between the erase margin area and the image area. Plain: High speed, 1200: Low speed		
001	Paper Transfer: Plain: 1st Side	*ENG	[0 to 50 / **0** / 2 mm/step]
003	Paper Transfer: 1200: 1st Side	*ENG	
005	Separation DC: Plain: 1st Side	*ENG	[0 to 50 / **0** / 1 mm/step]
007	Separation DC: 1200: 1st Side	*ENG	

2480	[Thin: Environment Correction] Plain: High speed, 1200: Low speed		
001	Separation DC: Plain: 1st Side	*ENG	[1 to 60 / **26** / 1 /step]
003	Paper Transfer: Plain: BW: 1st Side	*ENG	[1 to 60 / **11** / 1 /step]
005	Paper Transfer: Plain: FC: 1st Side	*ENG	[1 to 60 / **1** / 1 /step]
007	Separation DC: 1200: 1st Side	*ENG	[1 to 60 / **26** / 1 /step]
009	Paper Transfer: 1200: BW: 1st Side	*ENG	[1 to 60 / **11** / 1 /step]
011	Paper Transfer: 1200: FC: 1st Side	*ENG	[1 to 60 / **1** / 1 /step]

2481	[Glossy: Bias]		
001	Separation DC: 1st Side	*ENG	[0 to 4000 / **0** / 10 –V/step]
	Adjusts the DC voltage of the discharge plate for glossy paper.		

WWW.SERVICE-MANUAL.NET

2482	[Glossy: Bias: BW]		
001	Paper Transfer: 1st Side	*ENG	[0 to 250 / **12** / 1 –μA /step]
	Adjusts the current for the paper transfer roller for glossy paper in black-and-white mode.		

2483	[Glossy: Bias: FC]		
001	Paper Transfer: 1st Side	*ENG	[0 to 250 / **15** / 1 –μA /step]
	Adjusts the current for the paper transfer roller for glossy paper in full color mode.		

2484	[Glossy: Paper Size Correction]		
001	Paper Transfer: 1st Side: S1	*ENG	[100 to 600 / **100** / 5%/step]
005	Paper Transfer: 1st Side: S2	*ENG	[100 to 600 / **120** / 5%/step]
009	Paper Transfer: 1st Side: S3	*ENG	[100 to 600 / **140** / 5%/step]
013	Paper Transfer: 1st Side: S4	*ENG	[100 to 600 / **160** / 5%/step]
017	Paper Transfer: 1st Side: S5	*ENG	[100 to 600 / **180** / 5%/step]

2485	[Glossy: Leading Edge Correction]		
001	Paper Transfer: 1st Side	*ENG	[10 to 400 / **100** / 5%/step]
005	Separation DC: 1st Side	*ENG	[10 to 400 / **100** / 5%/step]]

2486	[Glossy: Switch Timing: Lead. Edge]		
001	Paper Transfer: 1st Side	*ENG	[0 to 50 / **0** / 2 mm/step]
005	Separation DC: 1st Side	*ENG	

WWW.SERVICE-MANUAL.NET

2487	[Glossy: Trailing Edge Correction]		
001	Paper Transfer: 1st Side	*ENG	[0 to 400 / **100** / 5 %/step]
005	Separation DC: 1st Side	*ENG	

2488	[Glossy: Switch Timing: Trail. Edge]		
001	Paper Transfer: 1st Side	*ENG	[0 to 50 / **0** / 2 mm/step]
005	Separation DC: 1st Side	*ENG	

2489	[Glossy: Environment Correction]		
001	Separation DC: 1st Side	*ENG	[1 to 60 / **26** / 1 /step]
003	Paper Transfer: BW: 1st Side	*ENG	[1 to 60 / **11** / 1 /step]
005	Paper Transfer: FC: 2nd Side	*ENG	[1 to 60 / **1** / 1 /step]

2501	[Thick 1: Bias]		
	Adjusts the DC voltage of the discharge plate for thick 1 paper. Thick 1: Middle speed, 1200: Low speed		
001	Separation DC: Plain: 1st Side	*ENG	[0 to 4000 / **1000** / 10 –V/step]
002	Separation DC: Plain: 2nd Side	*ENG	
003	Separation DC: 1200: 1st Side	*ENG	

WWW.SERVICE-MANUAL.NET

2502	[Thick 1: Bias: BW]		
	Adjusts the current for the paper transfer roller for thick 1 paper in black-and-white mode. Plain: High speed, 1200: Low speed		
001	Paper Transfer: Plain: 1st Side	*ENG	[0 to 250 / **24** / 1 –μA /step]
002	Paper Transfer: Plain: 2nd Side	*ENG	
003	Separation DC: 1200: 1st Side	*ENG	[0 to 250 / **12** / 1 –μA /step]

2507	[Thick 1: Bias: FC]		
	Adjusts the current for the paper transfer roller for thick 1 paper in full color mode. Plain: High speed, 1200: Low speed		
001	Paper Transfer: Plain: 1st Side	*ENG	[0 to 250 / **30** / 1 –μA /step]
002	Paper Transfer: Plain: 2nd Side	*ENG	
003	Separation DC: 1200: 1st Side	*ENG	[0 to 250 / **15** / 1 –μA /step]

2511	[Thick 1: Paper Size Correction]		
	Adjusts the size correction coefficient for the paper transfer roller current for each paper size. SP2502 and SP2507 are multiplied by these SP values. Plain: High speed, 1200: Low speed		
001	Paper Transfer: Plain: 1st Side: S1	*ENG	[100 to 600 / **100** / 5%/step] S1 size > 297 mm (Paper width)
002	Paper Transfer: Plain: 2nd Side: S1	*ENG	
003	Paper Transfer: 1200: 1st Side: S1	*ENG	[100 to 600 / **100** / 5%/step] S1 size > 297 mm (Paper width)

WWW.SERVICE-MANUAL.NET

005	Paper Transfer: Plain: 1st Side: S2	*ENG	[100 to 600 / **105** / 5%/step] 297 mm > S2 size > 275 mm (Paper width)
006	Paper Transfer: Plain: 2nd Side: S2	*ENG	[100 to 600 / **130** / 5%/step] 297 mm > S2 size > 275 mm (Paper width)
007	Paper Transfer: 1200: 1st Side: S2	*ENG	[100 to 600 / **120** / 5%/step] 297 mm > S2 size > 275 mm (Paper width)
009	Paper Transfer: Plain: 1st Side: S3	*ENG	[100 to 600 / **110** / 5%/step] 275 mm > S3 size > 210 mm (Paper width)
010	Paper Transfer: Plain: 2nd Side: S3	*ENG	[100 to 600 / **160** / 5%/step] 275 mm > S3 size > 210 mm (Paper width)
011	Paper Transfer: 1200: 1st Side: S3	*ENG	[100 to 600 / **140** / 5%/step] 275 mm > S3 size > 210 mm (Paper width)
013	Paper Transfer: Plain 1: 1st Side: S4	*ENG	[100 to 600 / **115** / 5%/step] 210 mm > S4 size > 148 mm (Paper width)
014	Paper Transfer: Plain: 2nd Side: S4	*ENG	[100 to 600 / **190** / 5%/step] 210 mm > S4 size > 148 mm (Paper width)
015	Paper Transfer: 1200: 1st Side: S4	*ENG	[100 to 600 / **160** / 5%/step] 210 mm > S4 size > 148 mm (Paper width)

WWW.SERVICE-MANUAL.NET

017	Paper Transfer: Plain 1: 1st Side: S5	*ENG	[100 to 600 / **120** / 5%/step] 148 mm > S5 size (Paper width)
018	Paper Transfer: Plain: 2nd Side: S5	*ENG	[100 to 600 / **220** / 5%/step] 148 mm > S5 size (Paper width)
019	Paper Transfer: 1200: 1st Side: S5	*ENG	[100 to 600 / **180** / 5%/step] 148 mm > S5 size (Paper width)

2521	[Thick 1: Leading Edge Correction] Thick 1 Paper: Leading Edge Correction		
	Adjusts the correction to the paper transfer roller current at the paper leading edge in each mode. SP2502 and SP2507 are multiplied by these SP values. Plain: High speed, 1200: Low speed Note ▪ The paper leading edge area can be adjusted with SP2522.		
001	Paper Transfer: Plain: 1st Side	*ENG	[0 to 400 / **100** / 5%/step]
002	Paper Transfer: Plain: 2nd Side	*ENG	
003	Paper Transfer: 1200: 1st Side	*ENG	[0 to 400 / **100** / 5%/step]
005	Separation DC: Plain: 1st Side	*ENG	[0 to 400 / **100** / 5%/step]
006	Separation DC: Plain: 2nd Side	*ENG	
007	Separation DC: 1200: 1st Side	*ENG	[0 to 400 / **100** / 5%/step]

2522	[Thick 1: Switch Timing: Lead. Edge]		
	Adjusts the bias/ voltage switch timing of the paper transfer roller/ discharge plate at the paper leading edge between the erase margin area and the image area. Plain: High speed, 1200: Low speed		
001	Paper Transfer: Plain 1: 1st Side	*ENG	[0 to 50 / **0** / 2 mm/step]
002	Paper Transfer: Plain: 2nd Side	*ENG	
003	Paper Transfer: 1200: 1st Side	*ENG	

WWW.SERVICE-MANUAL.NET

005	Separation DC: Plain 1: 1st Side	*ENG	[0 to 50 / **0** / 2 mm/step]
006	Separation DC: Plain 1: 2nd Side	*ENG	
007	Separation DC: 1200: 1st Side	*ENG	

2523	[Thick 1: Trailing Edge Correction] Thick 1 Paper: Trailing Edge Correction		
	Adjusts the correction coefficient to the paper transfer roller current for the paper trailing edge in each mode. SP2502 and SP2507 are multiplied by these SP values. Plain: High speed, 1200: Low speed Note ▪ The paper trailing edge area can be adjusted with SP2524.		
001	Paper Transfer: Plain: 1st Side	*ENG	[0 to 400 / **100** / 5%/step]
002	Paper Transfer: Plain: 2nd Side	*ENG	
003	Paper Transfer: 1200: 1st Side	*ENG	
005	Paper Transfer: Plain: 1st Side	*ENG	[0 to 400 / **100** / 5%/step]
006	Paper Transfer: Plain: 2nd Side	*ENG	
007	Paper Transfer: 1200: 1st Side	*ENG	

WWW.SERVICE-MANUAL.NET

2524	[Thick 1: Switch Timing: Trail. Edge]		
	Adjusts the bias/voltage switch timing of the paper transfer roller/discharge plate at the paper trailing edge between the erase margin area and the image area. Plain: High speed, 1200: Low speed		
001	Paper Transfer: Plain: 1st Side	*ENG	[0 to 50 / **0** / 1 mm/step]
002	Paper Transfer: Plain: 2nd Side	*ENG	
003	Paper Transfer: 1200: 1st Side	*ENG	
005	Paper Transfer: Plain: 1st Side	*ENG	
006	Paper Transfer: Plain: 2nd Side	*ENG	
007	Paper Transfer: 1200: 1st Side	*ENG	

2530	[Thick 1: Environment Correction] Plain: High speed, 1200: Low speed		
001	Separation DC: Plain: 1st Side	*ENG	[1 to 60 / **22** / 1 /step]
002	Separation DC: Plain: 2nd Side	*ENG	
003	Paper Transfer: Plain: BW: 1st Side	*ENG	[1 to 60 / **11** / 1 /step]
004	Paper Transfer: Plain: BW:2nd Side	*ENG	
005	Paper Transfer: Plain: FC: 1st Side	*ENG	[1 to 60 / **1** / 1 /step]
006	Paper Transfer: Plain: FC:2nd Side	*ENG	[1 to 60 / **11** / 1 /step]
007	Separation DC: 1200: 1st Side	*ENG	[1 to 60 / **22** / 1 /step]
009	Paper Transfer: 1200: BW: 1st Side	*ENG	[1 to 60 / **11** / 1 /step]
011	Paper Transfer: 1200: FC: 1st Side	*ENG	[1 to 60 / **1** / 1 /step]

WWW.SERVICE-MANUAL.NET

2551	[Thick 2: Bias]		
	Adjusts the DC voltage of the discharge plate for thick 2 paper.		
001	Separation DC: 1st Side	*ENG	[0 to 4000 / **0** / 10 –V/step]
002	Separation DC: 2nd Side	*ENG	

2553	[Thick 2: Bias: BW]		
	Adjusts the current for the paper transfer roller for thick 2 paper in black-and-white mode.		
001	Paper Transfer: 1st Side	*ENG	[0 to 250 / **7** / 1 –μA /step]
002	Paper Transfer: 2nd Side	*ENG	[0 to 250 / **12** / 1 –μA /step]

2558	[Thick 2: Bias: FC]		
	Adjusts the current for the paper transfer roller for thick 2 paper in full color mode.		
001	Paper Transfer: 1st Side	*ENG	[0 to 250 / **16** / 1 –μA /step]
002	Paper Transfer: 2nd Side	*ENG	[0 to 250 / **15** / 1 –μA /step]

WWW.SERVICE-MANUAL.NET

2561	[Thick 2: Paper Size Correction]		
	Adjusts the size correction coefficient for the paper transfer roller current for each paper size. SP2553 and SP2558 are multiplied by these SP values.		
001	Paper Transfer: 1st Side: S1	*ENG	[100 to 600 / **100** / 5%/step] S1 size > 297 mm (Paper width)
002	Paper Transfer: 2nd Side: S1	*ENG	
003	Paper Transfer: 1st Side: S2	*ENG	[100 to 600 / **105** / 5%/step] 297 mm > S2 size > 275 mm (Paper width)
004	Paper Transfer: 2nd Side: S2	*ENG	[100 to 600 / **160** / 5%/step] 297 mm > S2 size > 275 mm (Paper width)
005	Paper Transfer: 1st Side: S3	*ENG	[100 to 600 / **110** / 5%/step] 275 mm > S3 size > 210 mm (Paper width)
006	Paper Transfer: 2nd Side: S3	*ENG	[100 to 600 / **260** / 5%/step] 275 mm > S3 size > 210 mm (Paper width)
007	Paper Transfer: 1st Side: S4	*ENG	[100 to 600 / **120** / 5%/step] 210 mm > S4 size > 148 mm (Paper width)
008	Paper Transfer: 2nd Side: S4	*ENG	[100 to 600 / **430** / 5%/step] 210 mm > S4 size > 148 mm (Paper width)
009	Paper Transfer: 1st Side: S5	*ENG	[100 to 600 / **140** / 5%/step] 148 mm > S5 size (Paper width)
010	Paper Transfer: 2nd Side: S5	*ENG	[100 to 600 / **600** / 5%/step] 148 mm > S5 size (Paper width)

WWW.SERVICE-MANUAL.NET

2571	[Thick 2: Leading Edge Correction] Thick 2 Paper: Leading Edge Correction		
	Adjusts the correction to the paper transfer roller current at the paper leading edge in each mode. SP2553 and SP2558 are multiplied by these SP values. Note ▪ The paper leading edge area can be adjusted with SP2572.		
001	Paper Transfer: 1st Side	*ENG	[0 to 400 / **100** / 5%/step]
002	Paper Transfer: 2nd Side	*ENG	
2571	Adjusts the correction to the discharge plate current at the paper leading edge in each mode. SP2551 is multiplied by these SP values. Note ▪ The paper leading edge area can be adjusted with SP2572.		
003	Separation DC: 1st Side	*ENG	[0 to 400 / **100** / 5%/step]
004	Separation DC: 2nd Side	*ENG	

2572	[Thick 2: Switch Timing: Lead. Edge]		
	Adjusts the bias/ voltage switch timing of the paper transfer roller/ discharge plate at the paper leading edge between the erase margin area and the image area.		
001	Paper Transfer: 1st Side	*ENG	[0 to 50 / **0** / 2mm/step]
002	Paper Transfer: 2nd Side	*ENG	
003	Separation DC: 1st Side	*ENG	
004	Separation DC: 2nd Side	*ENG	

WWW.SERVICE-MANUAL.NET

2573	[Thick 2: Trailing Edge Correction] Thick 2 Paper: Trailing Edge Correction		
	Adjusts the correction to the paper transfer roller current for the paper trailing edge in each mode. SP2553 and SP2558 are multiplied by these SP values. Note ▪ The paper trailing edge area can be adjusted with SP2574.		
001	Paper Transfer: 1st Side	*ENG	[0 to 400 / **100** / 5%/step]
002	Paper Transfer: 2nd Side	*ENG	
003	Separation DC: 1st Side	*ENG	[0 to 400 / **100** / 5%/step]
004	Separation DC: 2nd Side	*ENG	[0 to 400 / **100** / 5%/step]

2574	[Thick 2: Switch Trailing Edge Correction]		
	Adjusts the bias/voltage switch timing of the paper transfer roller/discharge plate at the paper trailing edge between the erase margin area and the image area.		
001	Paper Transfer: 1st Side	*ENG	[0 to 50 / **0** / 2 mm/step]
002	Paper Transfer: 2nd Side	*ENG	
003	Separation DC: 1st Side	*ENG	
004	Separation DC: 2nd Side	*ENG	

2580	[Thick 2 Environment Correction]		
001	Separation DC: 1st Side	*ENG	[1 to 60 / **22** / 1 /step]
002	Separation DC: 2nd Side	*ENG	
003	Paper Transfer: BW: 1st Side	*ENG	[0 to 60 / **11** / 1 /step]
004	Paper Transfer: BW: 2nd Side	*ENG	
005	Paper Transfer: FC: 1st Side	*ENG	[1 to 60 / **53** / 1 /step]
006	Paper Transfer: FC: 2nd Side	*ENG	[1 to 60 / **11** / 1 /step]

WWW.SERVICE-MANUAL.NET

2601	[OHP: Bias]		
	Adjusts the DC voltage of the discharge plate for OHP.		
001	Separation DC	*ENG	[0 to 4000 / **0** / 10 –V/step]

2603	[OHP: Bias: BW]		
	Adjusts the current for the paper transfer roller for OHP in black-and-white mode.		
001	Paper Transfer	*ENG	[0 to 250 / **12** / 1 –μA /step]

2608	[OHP: Bias: FC]		
	Adjusts the current for the paper transfer roller for OHP in full color mode.		
001	Paper Transfer	*ENG	[0 to 250 / **15** / 1 –μA /step]

2611	[OHP: Paper Size Correction]		
	Adjusts the size correction coefficient for the paper transfer roller current for each paper size. SP2603 and SP2608 are multiplied by these SP values.		
001	Paper Transfer: S1	*ENG	[100 to 600 / **100** / 5%/step] S1 size > 297 mm (Paper width)
002	Paper Transfer: S2	*ENG	[100 to 600 / **140** / 5%/step] 297 mm > S2 size > 275 mm (Paper width)
003	Paper Transfer: S3	*ENG	[100 to 600 / **200** / 5%/step] 275 mm > S3 size > 210 mm (Paper width)
004	Paper Transfer: S4	*ENG	[100 to 600 / **260** / 5%/step] 210 mm > S4 size > 148 mm (Paper width)
005	Paper Transfer: S5	*ENG	[100 to 600 / **330** / 5%/step] 148 mm > S5 size (Paper width)

WWW.SERVICE-MANUAL.NET

2621	[OHP: Leadin Edge Correction] OHP: Leading Edge Correction		
	Adjusts the correction to the paper transfer roller current at the paper leading edge in each mode. SP2603 and SP2608 are multiplied by these SP values. Note ▪ The paper leading edge area can be adjusted with SP2622.		
001	Paper Transfer	*ENG	[0 to 400 / **100** / 5%/step]
2621	Adjusts the correction to the discharge plate current at the paper leading edge in each mode. SP2601 is multiplied by these SP values. Note ▪ The paper leading edge area can be adjusted with SP2622.		
002	Separation DC	*ENG	[0 to 400 / **100** / 5%/step]

2622	[OHP: Switch Timing: Leadn. Edge]		
	Adjusts the bias/ voltage switch timing of the paper transfer roller/ discharge plate at the paper leading edge between the erase margin area and the image area.		
001	Paper Transfer	*ENG	[0 to 50 / **0** / 2 mm/step]
002	Separation DC	*ENG	

2623	[OHP: Trailing Edge Correction] OHP: Trailing Edge Correction		
	Adjusts the correction to the paper transfer roller current for the paper trailing edge in each mode. SP2603 and SP2608 are multiplied by these SP values. Note ▪ The paper trailing edge area can be adjusted with SP2624.		
001	Paper Transfer	*ENG	[0 to 400 / **100** / 5%/step]
002	Separation DC	*ENG	

WWW.SERVICE-MANUAL.NET

2624	[OHP: Trailing Edge Correction]		
	Adjusts the bias/voltage switch timing of the paper transfer roller/discharge plate at the paper trailing edge between the erase margin area and the image area.		
001	Paper Transfer	*ENG	[–100 to 0 / **0** / 1 mm/step]
002	Separation DC	*ENG	[0 to 50 / **0** / 2 mm/step]

2630	[OHP: Environment Correction]		
001	Separation DC	*ENG	[1 to 60 / **22** / 1 /step]
002	Paper Transfer: BW	*ENG	[1 to 60 / **11** / 1 /step]
003	Paper Transfer: FC	*ENG	[1 to 60 / **1** / 1 /step]

2650	[Thick3: Bias]		
	Adjusts the DC voltage of the discharge plate for thick paper 3.		
001	Separation DC: 1st Side	*ENG	[0 to 4000 / **0** / 10 –V/step]
002	Separation DC: 2nd Side	*ENG	

2651	[Thick3: Bias: BW]		
	Adjusts the current for the paper transfer roller for thick paper 3 in black-and-white mode.		
001	Paper Transfer: 1st Side	*ENG	[0 to 250 / **10** / 1 –μA /step]
002	Paper Transfer: 2nd Side	*ENG	[0 to 250 / **12** / 1 –μA /step]

WWW.SERVICE-MANUAL.NET

2652	[Thick3: Bias: FC]		
	Adjusts the current for the paper transfer roller for thick paper 3 in full color mode.		
001	Paper Transfer: 1st Side	*ENG	[0 to 250 / **11** / 1 –μA /step]
002	Paper Transfer: 2nd Side	*ENG	[0 to 250 / **15** / 1 –μA /step]

2653	[Thick3: Paper Size Correction]		
	Adjusts the size correction coefficient for the paper transfer roller current for each paper size. SP2651 and SP2652 are multiplied by these SP values.		
001	Paper Transfer: 1st Side: S1	*ENG	[100 to 600 / **100** / 5%/step] S1 size > 297 mm (Paper width)
002	Paper Transfer: 1st Side: S2	*ENG	[100 to 600 / **100** / 5%/step] 297 mm > S2 size > 275 mm (Paper width)
003	Paper Transfer: 1st Side: S3	*ENG	[100 to 600 / **100** / 5%/step] 275 mm > S3 size > 210 mm (Paper width)
004	Paper Transfer: 1st Side: S4	*ENG	[100 to 600 / **160** / 5%/step] 210 mm > S4 size > 148 mm (Paper width)
005	Paper Transfer: 1st Side: S5	*ENG	[100 to 600 / **100** / 5%/step] 148 mm > S5 size (Paper width)
006	Paper Transfer: 2nd Side: S1	*ENG	[100 to 600 / **260** / 5%/step] S1 size > 297 mm (Paper width)
007	Paper Transfer: 2nd Side: S2	*ENG	[100 to 600 / **100** / 5%/step] 297 mm > S2 size > 275 mm (Paper width)

WWW.SERVICE-MANUAL.NET

008	Paper Transfer: 2nd Side: S3	*ENG	[100 to 600 / **430** / 5%/step] 275 mm > S3 size > 210 mm (Paper width)
009	Paper Transfer: 2nd Side: S4	*ENG	[100 to 600 / **100** / 5%/step] 210 mm > S4 size > 148 mm (Paper width)
010	Paper Transfer: 2nd Side: S3	*ENG	[100 to 600 / **600** / 5%/step] 148 mm > S5 size (Paper width)

2654	[Thick 3: Leading Edge Correction] Thick 3 Paper: Leading Edge Correction		
	Adjusts the correction to the paper transfer roller current at the paper leading edge in each mode. SP2651 and SP2652 are multiplied by these SP values. Note ▪ The paper leading edge area can be adjusted with SP2655.		
001	Paper Transfer: 1st Side	*ENG	[0 to 400 / **100** / 5%/step]
002	Separation DC: 1st Side	*ENG	
2654	Adjusts the correction to the discharge plate current at the paper leading edge in each mode. SP2650 is multiplied by these SP values. Note ▪ The paper leading edge area can be adjusted with SP2655.		
003	Paper Transfer: 2nd Side	*ENG	[0 to 400 / **100** / 5%/step]
004	Separation DC: 2nd Side	*ENG	

WWW.SERVICE-MANUAL.NET

2655	[Thick 3: Switch Timing: Lead. Edge]		
	Adjusts the bias/ voltage switch timing of the paper transfer roller/ discharge plate at the paper leading edge between the erase margin area and the image area.		
001	Paper Transfer: 1st Side	*ENG	[0 to 50 / **0** / 2 mm/step]
002	Separation DC: 1st Side	*ENG	
003	Paper Transfer: 2nd Side	*ENG	
004	Separation DC: 2nd Side	*ENG	

2656	[Thick 3: Trailing Edge Correction] Thick 3 Paper: Trailing Edge Correction		
	Adjusts the correction to the paper transfer roller current for the paper trailing edge in each mode. SP2651 and SP2652 are multiplied by these SP values. Note ▪ The paper trailing edge area can be adjusted with SP2657.		
001	Paper Transfer: 1st Side	*ENG	[0 to 400 / **100** / 5%/step]
002	Paper Transfer: 2nd Side	*ENG	
003	Separation DC: 1st Side	*ENG	
004	Separation DC: 2nd Side	*ENG	

2657	[Thick 3: Trailing Edge Correction]		
	Adjusts the bias/voltage switch timing of the paper transfer roller/discharge plate at the paper trailing edge between the erase margin area and the image area.		
001	Paper Transfer: 1st Side	*ENG	[0 to 50 / **0** / 2 mm/step]
002	Paper Transfer: 2nd Side	*ENG	
003	Separation DC: 1st Side	*ENG	
004	Separation DC: 2nd Side	*ENG	

WWW.SERVICE-MANUAL.NET

2660	[Thick 3: Environment Correction] Thick 3 Paper: MM Environment Coefficient Adjustment		
	Adjusts the environment coefficient for each mode. When the environment is detected as MM, SP2651 and SP2652 are multiplied by these SP values.		
001	Separation DC: 1st Side	*ENG	[1 to 60 / **22** / 1 /step]
002	Separation DC: 2nd Side	*ENG	
	Adjusts the environment coefficient for each mode. When the environment is detected as MM, SP2650 is multiplied by these SP values.		
003	Paper Transfer: BW: 1st Side	*ENG	[1 to 60 / **11** / 1 /step]
004	Paper Transfer: BW: 2nd Side	*ENG	
005	Paper Transfer: FC: 1st Side	*ENG	[1 to 60 / **55** / 1 /step]
006	Paper Transfer: FC: 2nd Side	*ENG	[1 to 60 / **11** / 1 /step]

2670	[Thick4: Bias]		
	Adjusts the DC voltage of the discharge plate for thick paper 4.		
001	Separation DC: 1st Side	*ENG	[0 to 4000 / **0** / 10 –V/step]
002	Separation DC: 2nd Side	*ENG	

2671	[Thick4: Bias: BW]		
	Adjusts the current for the paper transfer roller for thick paper 4 in black-and-white mode.		
001	Paper Transfer: 1st Side	*ENG	[0 to 250 / **10** / 1 –μA /step]
002	Paper Transfer: 2nd Side	*ENG	[0 to 250 / **11** / 1 –μA /step]

WWW.SERVICE-MANUAL.NET

2672	[Thick4: Bias: FC]		
	Adjusts the current for the paper transfer roller for thick paper 4 in full color mode.		
001	Paper Transfer: 1st Side	*ENG	[0 to 250 / **11** / 1 –μA /step]
002	Paper Transfer: 2nd Side	*ENG	[0 to 250 / **15** / 1 –μA /step]

2673	[Thick4: Paper Size Correction]		
	Adjusts the size correction coefficient for the paper transfer roller current for each paper size. SP2671 and SP2672 are multiplied by these SP values.		
001	Paper Transfer: 1st Side: S1	*ENG	[100 to 600 / **100** / 5%/step] S1 size > 297 mm (Paper width)
002	Paper Transfer: 1st Side: S2	*ENG	[100 to 600 / **100** / 5%/step] 297 mm > S2 size > 275 mm (Paper width)
003	Paper Transfer: 1st Side: S3	*ENG	[100 to 600 / **100** / 5%/step] 275 mm > S3 size > 210 mm (Paper width)
004	Paper Transfer: 1st Side: S4	*ENG	[100 to 600 / **160** / 5%/step] 210 mm > S4 size > 148 mm (Paper width)
005	Paper Transfer: 1st Side: S5	*ENG	[100 to 600 / **100** / 5%/step] 148 mm > S5 size (Paper width)
006	Paper Transfer: 2nd Side: S1	*ENG	[100 to 600 / **260** / 5%/step] S1 size > 297 mm (Paper width)
007	Paper Transfer: 2nd Side: S2	*ENG	[100 to 600 / **100** / 5%/step] 297 mm > S2 size > 275 mm (Paper width)

WWW.SERVICE-MANUAL.NET

008	Paper Transfer: 2nd Side: S3	*ENG	[100 to 600 / **430** / 5%/step] 275 mm > S3 size > 210 mm (Paper width)
009	Paper Transfer: 2nd Side: S4	*ENG	[100 to 600 / **100** / 5%/step] 210 mm > S4 size > 148 mm (Paper width)
010	Paper Transfer: 2nd Side: S3	*ENG	[100 to 600 / **600** / 5%/step] 148 mm > S5 size (Paper width)

2674	[Thick 4: Leading Edge Correction] Thick 4 Paper: Leading Edge Correction		
	Adjusts the correction to the paper transfer roller current at the paper leading edge in each mode. SP2671 and SP2672 are multiplied by these SP values. Note ▪ The paper leading edge area can be adjusted with SP2675.		
001	Paper Transfer: 1st Side	*ENG	[0 to 400 / **100** / 5%/step]
002	Separation DC: 1st Side	*ENG	
2674	Adjusts the correction to the discharge plate current at the paper leading edge in each mode. SP2670 is multiplied by these SP values. Note ▪ The paper leading edge area can be adjusted with SP2655.		
003	Paper Transfer: 2nd Side	*ENG	[0 to 400 / **100** / 5%/step]
004	Separation DC: 2nd Side	*ENG	

WWW.SERVICE-MANUAL.NET

2675	[Thick 4: Switch Timing: Lead. Edge]		
	Adjusts the bias/ voltage switch timing of the paper transfer roller/ discharge plate at the paper leading edge between the erase margin area and the image area.		
001	Paper Transfer: 1st Side	*ENG	[0 to 50 / **0** / 2 mm/step]
002	Separation DC: 1st Side	*ENG	
003	Paper Transfer: 2nd Side	*ENG	
004	Separation DC: 2nd Side	*ENG	

2676	[Thick 4: Trailing Edge Correction] Thick 4 Paper: Trailing Edge Correction		
	Adjusts the correction to the paper transfer roller current for the paper trailing edge in each mode. SP2671 and SP2672 are multiplied by these SP values. Note ▪ The paper trailing edge area can be adjusted with SP2677.		
001	Paper Transfer: 1st Side	*ENG	[0 to 400 / **100** / 5%/step]
002	Paper Transfer: 2nd Side	*ENG	
003	Separation DC: 1st Side	*ENG	
004	Separation DC: 2nd Side	*ENG	

2677	[Thick 4: Trailing Edge Correction]		
	Adjusts the bias/voltage switch timing of the paper transfer roller/discharge plate at the paper trailing edge between the erase margin area and the image area.		
001	Paper Transfer: 1st Side	*ENG	[0 to 50 / **0** / 2 mm/step]
002	Paper Transfer: 2nd Side	*ENG	
003	Separation DC: 1st Side	*ENG	
004	Separation DC: 2nd Side	*ENG	

WWW.SERVICE-MANUAL.NET

2680	[Thick 4: Environment Correction] Thick 4 Paper: MM Environment Coefficient Adjustment		
	Adjusts the environment coefficient for each mode. When the environment is detected as MM, SP2671 and SP2672 are multiplied by these SP values.		
001	Separation DC: 1st Side	*ENG	[1 to 60 / **22** / 1 /step]
002	Separation DC: 2nd Side	*ENG	
	Adjusts the environment coefficient for each mode. When the environment is detected as MM, SP2670 is multiplied by these SP values.		
003	Paper Transfer: BW: 1st Side	*ENG	[1 to 60 / **11** / 1 /step]
004	Paper Transfer: BW: 2nd Side	*ENG	
005	Paper Transfer: FC: 1st Side	*ENG	[1 to 60 / **55** / 1 /step]
006	Paper Transfer: FC: 2nd Side	*ENG	[1 to 60 / **11** / 1 /step]

2690	[ITB Contact Setting]		
001	Thick4	*ENG	[0 or 1 / **0** / 1 /step] 0: detach (Black drum is in contact.) 1: attach (All drums are in contact.)
	Selects the ITB contact mode for thick 4 paper in BW printing mode.		

2751	[Special1: Bias]		
	Adjusts the DC voltage of the discharge plate for special paper 1. Plain: High speed, Thick 1: Middle speed		
001	Separation DC: Plain: 1st Side	*ENG	[0 to 4000 / **0** / 10 –V/step]
002	Separation DC: Plain: 2nd Side	*ENG	
003	Paper Transfer: Thick 1: 1st Side	*ENG	

WWW.SERVICE-MANUAL.NET

2753	[Special1: Bias: BW]		
	Adjusts the current for the paper transfer roller for special paper 1 in black-and-white mode. Plain: High speed		
001	Paper Transfer: Plain: 1st Side	*ENG	[0 to 250 / **C2.5c: 30, C2.5d: 38** / 1 –μA /step]
002	Paper Transfer: Plain: 2nd Side	*ENG	
003	Paper Transfer: Plain: 1st Side	*ENG	[0 to 250 / **11** / 1 –μA /step]

2757	[Special1: Bias: FC]		
	Adjusts the current for the paper transfer roller for special paper 1 in full color mode. Plain: High speed, Fine: Low speed		
001	Paper Transfer: Plain: 1st Side	*ENG	[0 to 250 / **C2.5c: 40, C2.5d: 50** / 1 –μA /step]
002	Paper Transfer: Plain: 2nd Side	*ENG	[0 to 250 / **C2.5c: 45, C2.5d: 55** / 1 –μA /step]
003	Paper Transfer: Plain: 1st Side	*ENG	[0 to 250 / **15** / 1 –μA /step]

2761	[Special1: Paper Size Correction]		
	Adjusts the size correction coefficient for the paper transfer roller current for each paper size. SP2753 and SP2757 are multiplied by these SP values.		
001	Paper Transfer: 1st Side: S1	*ENG	[100 to 600 / **100** / 5%/step] S1 size > 297 mm (Paper width)
002	Paper Transfer: 2nd Side: S1	*ENG	
005	Paper Transfer: 1st Side: S2	*ENG	[100 to 600 / **120** / 5%/step] 297 mm > S2 size > 275 mm (Paper width)
006	Paper Transfer: 2nd Side: S2	*ENG	
009	Paper Transfer: 1st Side: S3	*ENG	[100 to 600 / **140** / 5%/step] 275 mm > S3 size > 210 mm
010	Paper Transfer: 2nd Side: S3	*ENG	

WWW.SERVICE-MANUAL.NET

			(Paper width)
013	Paper Transfer: 1st Side: S4	*ENG	[100 to 600 / **160** / 5%/step] 210 mm > S4 size > 148 mm (Paper width)
014	Paper Transfer: 2nd Side: S4	*ENG	[100 to 600 / **160** / 5%/step] 210 mm > S4 size > 148 mm (Paper width)
017	Paper Transfer: 1st Side: S5	*ENG	[100 to 600 / **180** / 5%/step] 148 mm > S5 size (Paper width)
018	Paper Transfer: 2nd Side: S5	*ENG	[100 to 600 / **180** / 5%/step] 148 mm > S5 size (Paper width)

2771	[Special 1: Leading Edge Correction] Special 1 Paper: Leading Edge Correction		
	Adjusts the correction to the paper transfer roller current at the paper leading edge in each mode. SP2753 and SP2757 are multiplied by these SP values. Plain: High speed, 1200: Low speed Note ▪ The paper leading edge area can be adjusted with SP2772.		
001	Paper Transfer: Plain: 1st Side	*ENG	[0 to 400 / **100** / 5%/step]
002	Paper Transfer: Plain: 2nd Side	*ENG	[0 to 400 / **100** / 5%/step]
003	Paper Transfer: 1200: 1st Side	*ENG	[0 to 400 / **100** / 5%/step]
2771	Adjusts the correction to the discharge plate current at the paper leading edge in each mode. SP2751 is multiplied by these SP values. Note ▪ The paper leading edge area can be adjusted with SP2772.		
005	Separation DC: Plain: 1st Side	*ENG	[0 to 400 / **100** / 5%/step]
006	Separation DC: Plain: 2nd Side	*ENG	
007	Separation DC: 1200: 1st Side	*ENG	[0 to 400 / **100** / 5%/step]

WWW.SERVICE-MANUAL.NET

2772	[Special 1: Switch Timing: Lead. Edge]		
	Adjusts the bias/ voltage switch timing of the paper transfer roller/ discharge plate at the paper leading edge between the erase margin area and the image area. Plain: High speed, 1200: Low speed		
001	Paper Transfer: Plain: 1st Side	*ENG	[0 to 50 / **0** / 2 mm/step]
002	Paper Transfer: Plain: 2nd Side	*ENG	
003	Paper Transfer: 1200: 1st Side	*ENG	[0 to 50 / **0** / 1 mm/step]
005	Separation DC: Plain: 1st Side	*ENG	[0 to 50 / **0** / 2 mm/step]
006	Separation DC: Plain: 2nd Side	*ENG	
007	Separation DC: 1200: 1st Side	*ENG	

2773	[Special 1: Trailing Edge Correction] Special 1 Paper: Trailing Edge Correction		
	Adjusts the correction to the paper transfer roller current for the paper trailing edge in each mode. SP2753 and SP2757 are multiplied by these SP values. Plain: High speed, 1200: Low speed Note ▪ The paper trailing edge area can be adjusted with SP2774.		
001	Paper Transfer: Plain: 1st Side	*ENG	[0 to 400 / **100** / 5%/step]
002	Paper Transfer: Plain: 2nd Side	*ENG	
003	Paper Transfer: 1200: 1st Side	*ENG	
005	Separation DC: Plain: 1st Side	*ENG	
006	Separation DC: Plain: 2nd Side	*ENG	
007	Separation DC: 1200: 1st Side	*ENG	

WWW.SERVICE-MANUAL.NET

2774	[Special 1: Switch Timing: Trail. Edge]		
	Adjusts the bias/voltage switch timing of the paper transfer roller/discharge plate at the paper trailing edge between the erase margin area and the image area. Plain: High speed, 1200: Low speed		
001	Paper Transfer: Plain: 1st Side	*ENG	[0 to 50 / **0** / 2 mm/step]
002	Paper Transfer: Plain: 2nd Side	*ENG	
003	Paper Transfer: 1200: 1st Side	*ENG	
005	Separation DC: Plain: 1st Side	*ENG	
006	Separation DC: Plain: 2nd Side	*ENG	
007	Separation DC: 1200: 1st Side	*ENG	

2780	[Special 1: Environment Correction] Plain: High speed, 1200: Low speed		
001	Separation DC: Plain: 1st Side	*ENG	[1 to 60 / **26** / 1 /step]
002	Separation DC: Plain: 2nd Side	*ENG	[1 to 60 / **32** / 1 /step]
003	Paper Transfer: Plain: BW: 1st Side	*ENG	[1 to 60 / **11** / 1 /step]
004	Paper Transfer: Plain: BW:2nd Side	*ENG	
005	Paper Transfer: Plain: FC: 1st Side	*ENG	[1 to 60 / **1** / 1 /step]
006	Paper Transfer: Plain: FC:2nd Side	*ENG	[1 to 60 / **14** / 1 /step]
007	Separation DC: 1200: 1st Side	*ENG	[1 to 60 / **26** / 1 /step]
009	Paper Transfer: 1200: BW: 1st Side	*ENG	[1 to 60 / **11** / 1 /step]
011	Paper Transfer: 1200: FC: 1st Side	*ENG	[1 to 60 / **1** / 1 /step]

WWW.SERVICE-MANUAL.NET

2801	[Special2: Bias]		
	Adjusts the DC voltage of the discharge plate for special paper 2. Plain: High speed, 1200: Low speed		
001	Separation DC: Plain: 1st Side	*ENG	[0 to 4000 / **0** / 10 –V/step]
002	Separation DC: Plain: 2nd Side	*ENG	
003	Separation DC: 1200: 1st Side	*ENG	

2803	[Special2: Bias: BW]		
	Adjusts the current for the paper transfer roller for special paper 2 in black-and-white mode. Plain: High speed, 1200: Low speed		
001	Paper Transfer: Plain: 1st Side	*ENG	[0 to 250 / **C2.5c: 30/ C2.5d: 38** / 1 –μA /step]
002	Paper Transfer: Plain: 2nd Side	*ENG	
003	Separation DC: 1200: 1st Side	*ENG	[0 to 200 / **11** / 1 –μA /step]

2807	[Special2: Bias: FC]		
	Adjusts the current for the paper transfer roller for special paper 2 in full color mode. Plain: High speed, Thick 2&Fine: Low speed		
001	Paper Transfer: Plain: 1st Side	*ENG	[0 to 250 / **C2.5c: 40/ C2.5d: 50** / 1 –μA /step]
002	Paper Transfer: Plain: 2nd Side	*ENG	[0 to 250 / **C2.5c: 45/ C2.5d: 55** / 1 –μA /step]
003	Separation DC: 1200: 1st Side	*ENG	[0 to 250 / **15** / 1 –μA /step]

WWW.SERVICE-MANUAL.NET

2811	[Special2: Paper Size Correction]		
	Adjusts the size correction coefficient for the paper transfer roller current for each paper size. SP2803 and SP2807 are multiplied by these SP values.		
001	Paper Transfer: 1st Side: S1	*ENG	[100 to 600 / **100** / 5%/step] S1 size > 297 mm (Paper width)
002	Paper Transfer: 2nd Side: S1	*ENG	
005	Paper Transfer: 1st Side: S2	*ENG	[100 to 600 / **120** / 5%/step] 297 mm > S2 size > 275 mm (Paper width)
006	Paper Transfer: 2nd Side: S2	*ENG	[100 to 600 / **120** / 5%/step] 297 mm > S2 size > 275 mm (Paper width)
009	Paper Transfer: 1st Side: S3	*ENG	[100 to 600 / **140** / 5%/step] 275 mm > S3 size > 210 mm (Paper width)
010	Paper Transfer: 2nd Side: S3	*ENG	[100 to 600 / **140** / 5%/step] 275 mm > S3 size > 210 mm (Paper width)
013	Paper Transfer: 1st Side: S4	*ENG	[100 to 600 / **160** / 5%/step] 210 mm > S4 size > 148 mm (Paper width)
014	Paper Transfer: 2nd Side: S4	*ENG	[100 to 600 / **160** / 5%/step] 210 mm > S4 size > 148 mm (Paper width)
017	Paper Transfer: 1st Side: S5	*ENG	[100 to 600 / **180** / 5%/step] 148 mm > S5 size (Paper width)
018	Paper Transfer: 2nd Side: S5	*ENG	[100 to 600 / **180** / 5%/step] 148 mm > S5 size (Paper width)

WWW.SERVICE-MANUAL.NET

2821	[Special 2: Leading Edge Correction] Special 2 Paper: Leading Edge Correction		
	Adjusts the correction to the paper transfer roller current at the paper leading edge in each mode. SP2803 and SP2807 are multiplied by these SP values. Plain: High speed, 1200: Low speed Note ▪ The paper leading edge area can be adjusted with SP2822.		
001	Paper Transfer: Plain: 1st Side	*ENG	[0 to 400 / **100** / 5%/step]
002	Paper Transfer: Plain: 2nd Side	*ENG	[0 to 400 / **100** / 5%/step]
003	Paper Transfer: 1200: 1st Side	*ENG	[0 to 400 / **100** / 5%/step]
2821	Adjusts the correction to the discharge plate current at the paper leading edge in each mode. SP2801 is multiplied by these SP values. Note ▪ The paper leading edge area can be adjusted with SP2822.		
005	Separation DC: Plain: 1st Side	*ENG	[0 to 400 / **100** / 5%/step]
006	Separation DC: Plain: 2nd Side	*ENG	
007	Separation DC: 12001st Side	*ENG	

2822	[Special 2: Switch Timing: Lead. Edge]		
	Adjusts the bias/ voltage switch timing of the paper transfer roller/ discharge plate at the paper leading edge between the erase margin area and the image area. Plain: High speed, 1200: Low speed		
001	Paper Transfer: Plain: 1st Side	*ENG	[0 to 50 / **0** / 2 mm/step]
002	Paper Transfer: Plain: 2nd Side	*ENG	
003	Paper Transfer: 1200: 1st Side	*ENG	
005	Separation DC: Plain: 1st Side	*ENG	
006	Separation DC: Plain: 2nd Side	*ENG	

WWW.SERVICE-MANUAL.NET

007	Separation DC: 1200: 1st Side	*ENG	

2823	[Special 2: Trailing Edge Correction] Special 2 Paper: Trailing Edge Correction		
	Adjusts the correction to the paper transfer roller current for the paper trailing edge in each mode. SP2803 and SP2807 are multiplied by these SP values. Plain: High speed, 1200: Low speed Note ▪ The paper trailing edge area can be adjusted with SP2824.		
001	Paper Transfer: Plain: 1st Side	*ENG	[0 to 400 / **100** / 5%/step]
002	Paper Transfer: Plain: 2nd Side	*ENG	
003	Paper Transfer: 1200: 1st Side	*ENG	
005	Separation DC: Plain: 1st Side	*ENG	
006	Separation DC: Plain: 2nd Side	*ENG	
007	Separation DC: 1200: 1st Side	*ENG	

2824	[Special 2: Switch Timing: Trail. Edge]		
	Adjusts the bias/voltage switch timing of the paper transfer roller/discharge plate at the paper trailing edge between the erase margin area and the image area. Plain: High speed, 1200: Low speed		
001	Paper Transfer: Plain: 1st Side	*ENG	[0 to 50 / **0** / 2 mm/step]
002	Paper Transfer: Plain: 2nd Side	*ENG	
003	Paper Transfer: 1200: 1st Side	*ENG	
005	Separation DC: Plain: 1st Side	*ENG	
006	Separation DC: Plain: 2nd Side	*ENG	
007	Separation DC: 1200: 1st Side	*ENG	

WWW.SERVICE-MANUAL.NET

2830	[Special 2: Environment Correction] Plain: High speed, 1200: Low speed		
001	Paper Transfer: Plain: 1st Side	*ENG	[1 to 60 / **26** / 1 /step]
002	Paper Transfer: Plain: 2nd Side	*ENG	[1 to 60 / **32** / 1 /step]
003	Paper Transfer: Plain: BW: 1st Side	*ENG	[1 to 60 / **1** / 1 /step]
004	Paper Transfer: Plain: BW:2nd Side	*ENG	[1 to 60 / **11** / 1 /step]
005	Paper Transfer: Plain: FC: 1st Side	*ENG	[1 to 60 / **1** / 1 /step]
006	Paper Transfer: Plain: FC:2nd Side	*ENG	[1 to 60 / **14** / 1 /step]
007	Paper Transfer: 1200: 1st Side	*ENG	[1 to 60 / **26** / 1 /step]
009	Paper Transfer: 1200: BW: 1st Side	*ENG	[1 to 60 / **11** / 1 /step]
011	Paper Transfer: 1200: FC: 1st Side	*ENG	[1 to 60 / **1** / 1 /step]

2851	[Special 3: Bias]		
	Adjusts the DC voltage of the discharge plate for special paper 3. Plain: High speed, 1200: Low speed		
001	Separation DC: Plain: 1st Side	*ENG	[0 to 4000 / **0** / 10 –V/step]
002	Separation DC: Plain: 2nd Side	*ENG	
003	Separation DC: 1200: 1st Side	*ENG	

2852	[Special 3: Bias: BW]		
	Adjusts the current for the paper transfer roller for special paper 3 in black-and-white mode. Plain: High speed, 1200: Low speed		
001	Paper Transfer: Plain: 1st Side	*ENG	[0 to 250 / **C2.5c: 30/ C2.5d: 38** / 1 –μA /step]
002	Paper Transfer: Plain: 2nd Side	*ENG	
003	Paper Transfer: 1200: 1st Side	*ENG	[0 to 250 / **11** / 1 –μA /step]

WWW.SERVICE-MANUAL.NET

2857	[Special 3: Bias: FC]		
	Adjusts the current for the paper transfer roller for special paper 3 in full color mode. Plain: High speed, 1200: Low speed		
001	Paper Transfer: Plain: 1st Side	*ENG	[0 to 250 / **C2.5c: 40/ C2.5d: 50** / 1 –μA /step]
002	Paper Transfer: Plain: 2nd Side	*ENG	[0 to 250 / **C2.5c: 45/ C2.5d: 55** / 1 –μA /step]
003	Paper Transfer: 1200: 1st Side	*ENG	[0 to 250 / **15** / 1 –μA /step]

2861	[Special 3: Paper Size Correction]		
	Adjusts the size correction coefficient for the paper transfer roller current for each paper size. SP2852 and SP2857 are multiplied by these SP values.		
001	Paper Transfer: 1st Side: S1	*ENG	[100 to 600 / **100** / 5%/step] S1 size > 297 mm (Paper width)
002	Paper Transfer: 2nd Side: S1	*ENG	
005	Paper Transfer: 1st Side: S2	*ENG	[100 to 600 / **120** / 5%/step] 297 mm > S2 size > 275 mm (Paper width)
006	Paper Transfer: 2nd Side: S2	*ENG	[100 to 600 / **120** / 5%/step] 297 mm > S2 size > 275 mm (Paper width)
009	Paper Transfer: 1st Side: S3	*ENG	[100 to 600 / **140** / 5%/step] 275 mm > S3 size > 210 mm (Paper width)
010	Paper Transfer: 2nd Side: S3	*ENG	[100 to 600 / **140** / 5%/step] 275 mm > S3 size > 210 mm (Paper width)
013	Paper Transfer: 1st Side: S4	*ENG	[100 to 600 / **160** / 5%/step] 210 mm > S4 size > 148 mm (Paper width)

WWW.SERVICE-MANUAL.NET

014	Paper Transfer:: 2nd Side: S4	*ENG	[100 to 600 / **160** / 5%/step] 210 mm > S4 size > 148 mm (Paper width)
017	Paper Transfer:: 1st Side: S5	*ENG	[100 to 600 / **180** / 5%/step] 148 mm > S5 size (Paper width)
018	Paper Transfer:: 2nd Side: S5	*ENG	[100 to 600 / **180** / 5%/step] 148 mm > S5 size (Paper width)

2871	[Special 3: Leading Edge Correction] Special 3 Paper: Leading Edge Correction		
	Adjusts the correction to the paper transfer roller current at the paper leading edge in each mode. SP2852 and SP2857 are multiplied by these SP values. Plain: High speed, 1200: Low speed Note ▪ The paper leading edge area can be adjusted with SP2872.		
001	Paper Transfer: Plain: 1st Side	*ENG	[0 to 400 / **100** / 5%/step]
002	Paper Transfer: Plain: 2nd Side	*ENG	
003	Paper Transfer: 1200: 1st Side	*ENG	
2871	Adjusts the correction to the discharge plate current at the paper leading edge in each mode. SP2851 is multiplied by these SP values. Note ▪ The paper leading edge area can be adjusted with SP2872.		
005	Separation DC: Plain: 1st Side	*ENG	[0 to 400 / **100** / 5%/step]
006	Separation DC: Plain: 2nd Side	*ENG	
007	Separation DC: 1200: 1st Side	*ENG	

WWW.SERVICE-MANUAL.NET

2872	[Special 3: Switch Timing: Lead. Edge]		
	Adjusts the bias/ voltage switch timing of the paper transfer roller/ discharge plate at the paper leading edge between the erase margin area and the image area. Plain: High speed, 1200: Low speed		
001	Paper Transfer: Plain: 1st Side	*ENG	[0 to 50 / **0** / 2 mm/step]
002	Paper Transfer: Plain: 2nd Side	*ENG	
003	Paper Transfer: 1200: 1st Side	*ENG	
005	Separation DC: Plain: 1st Side	*ENG	
006	Separation DC: Plain: 2nd Side	*ENG	
007	Separation DC: 1200: 1st Page	*ENG	

2873	[Special 3: Trailing Edge Correction] Special 3 Paper: Trailing Edge Correction		
	Adjusts the correction to the paper transfer roller current for the paper trailing edge in each mode. SP2852 and SP2857 are multiplied by these SP values. Plain: High speed, 1200: Low speed Note ▪ The paper trailing edge area can be adjusted with SP2874.		
001	Paper Transfer: Plain: 1st Side	*ENG	[0 to 400 / **100** / 5%/step]
002	Paper Transfer: Plain: 2nd Side	*ENG	
003	Paper Transfer: 1200: 1st Side	*ENG	
005	Separation DC: Plain: 1st Side	*ENG	
006	Separation DC: Plain: 2nd Side	*ENG	
007	Separation DC: 1200: 1st Page	*ENG	

WWW.SERVICE-MANUAL.NET

2874	[Special 3: Switch Timing: Trail. Edge]		
	Adjusts the bias/voltage switch timing of the paper transfer roller/discharge plate at the paper trailing edge between the erase margin area and the image area. Plain: High speed, 1200: Low speed		
001	Paper Transfer: Plain: 1st Side	*ENG	[0 to 50 / **0** / 2 mm/step]
002	Paper Transfer: Plain: 2nd Side	*ENG	
003	Paper Transfer: 1200: 1st Side	*ENG	
005	Separation DC: Plain: 1st Side	*ENG	
006	Separation DC: Plain: 2nd Side	*ENG	
007	Separation DC: 1200: 1st Page	*ENG	

2880	[Special 3: Environment Correction] Plain: High speed, 1200: Low speed		
001	Separation DC: Plain: 1st Side	*ENG	[1 to 60 / **26** / 1 /step]
002	Separation DC: Plain: 2nd Side	*ENG	[1 to 60 / **32** / 1 /step]
003	Paper Transfer: Plain: BW: 1st Side	*ENG	[1 to 60 / **11** / 1 /step]
004	Paper Transfer: Plain: BW:2nd Side	*ENG	
005	Paper Transfer: Plain: FC: 1st Side	*ENG	[1 to 60 / **11** / 1 /step]
006	Paper Transfer: Plain: FC:2nd Side	*ENG	
007	Separation DC: 1200: 1st Side	*ENG	[1 to 60 / **26** / 1 /step]
009	Paper Transfer: 1200: BW: 1st Side	*ENG	[1 to 60 / **11** / 1 /step]
011	Paper Transfer: 1200: FC: 1st Side	*ENG	[1 to 60 / **1** / 1 /step]

WWW.SERVICE-MANUAL.NET

2901	[OPC Drum Brake Time]		
	Adjusts the time when the OPC drum motor reverses from normal rotation after job end. **DFU** Plain: High speed, Thick 1: Middle speed, Thick 2&Fine: Low speed		
001	Plain	*ENG	[300 to 1500 / **500** / 10 msec/step]
002	Thick 1	*ENG	
003	Thick 2 & FINE	*ENG	

2902	[OPC Drum Reverse Time] **DFU**		
	Adjusts the time for how long the OPC drum motor reverses after job end.		
001	All: BW	*ENG	[0 to 200 / **50** / 10 msec/step]
002	All: FC	*ENG	[0 to 200 / **50** / 10 msec/step]

2903	[Image Transfer Roller Brake Time] **DFU**		
	Adjusts the time when the image transfer belt motor reverses from normal rotation after job end. Plain: High speed, Thick 1: Middle speed, Thick 2&Fine: Low speed		
003	Plain	*ENG	[300 to 1500 / **500** / 10 msec/step]
004	Thick 1	*ENG	
005	Thick 2 & FINE	*ENG	

2904	[Image Transfer Roller Reverse Time] **DFU**		
	Adjusts the time for how long the image transfer belt motor reverses after job end.		
003	All	*ENG	[0 to 200 / **40** / 10 msec/step]

WWW.SERVICE-MANUAL.NET

2905	[Dev Rvs Time] Development Roller Reverse Time		
	Specifies the time of the development roller reverse rotation after the development unit has stopped. The reverse rotation of the development roller is used for removing dust from the development roller.		
001	K	*ENG	[0 to 200 / **80** / 10 msec/step]
002	M	*ENG	
003	C	*ENG	
004	Y	*ENG	
005	[Dev Rvs Threshold Counter]		
	All	*ENG	[0 to 400000 / **4000**/ 10 mm/step]
	Specifies the threshold distance for the development roller reverse mode. This sp refers to the counters for SP2905-006 to -009.		
	[Dev Rvs Counter]		
006	K	*ENG	[0 to 999999999 / - / 1 mm/step]
007	M	*ENG	
008	C	*ENG	
009	Y	*ENG	

2906	[Phase Angle]		
	DFU		
001	Y Drum	*ENG	[0 to 359 / **0** / 1 deg/step]
002	C Drum	*ENG	
003	M Drum	*ENG	
004	K Drum	*ENG	
2906	[Amplitude Setting]		
006	Y Drum	*ENG	[0 to 100 / **0.0** / 0.1 μm/step]

WWW.SERVICE-MANUAL.NET

007	C Drum	*ENG	
008	M Drum	*ENG	
009	K Drum	*ENG	

2907	[ACS Setting (FC to Bk)]		
	Adjusts the threshold for moving away the image transfer belt from the color PCDUs. This SP moves the image transfer belt away from the color PCDUs when the number of B/W image printouts reaches the number of sheets specified with this SP after consecutive full color image printouts in the full color mode. If this SP is set to "0", the image transfer belt does not move away.		
001	Continuous Bk Pages	*ENG	[0 to 10 / **0** / 1 sheet/step]

2908	[Gain Adjust] Gain Adjustment of Image Transfer Belt Motor **DFU**		
	0: High speed (Low level) 1: Middle high speed 2: Middle low speed 3: Low speed (High level)		
001	255 mm/sec	*ENG	[0 or 1 / **0** / 1/step]
002	230 mm/sec	*ENG	
003	205 mm/sec	*ENG	[0 or 1 / **1** / 1/step]
004	154 mm/sec	*ENG	[0 or 1 / **2** / 1/step]
005	77 mm/sec	*ENG	[0 or 1 / **3** / 1/step]

WWW.SERVICE-MANUAL.NET

2911	[Offset Angle] **DFU**		
001	Y Drum	*ENG	[0 to 359 / **0** / 1 deg/step]
002	C Drum	*ENG	
003	M Drum	*ENG	
004	K Drum	*ENG	

2912	[Offset Amplitude Setting] **DFU**		
001	Y Drum	*ENG	[0 to 100 / **0.0** / 0.1 μm/step]
002	C Drum	*ENG	
003	M Drum	*ENG	
004	K Drum	*ENG	

2913	[Drum Control]		
001	Rotation Direction	*ENG	[0 or 1 / **1** / -/step]

2920	[Transfer Motor Control]		
001	0: Encorder 1 :FG	*ENG	[0 or 1 / **0** / 1 /step]
	Selects the speed control mode for the ITB. If SC443 occurs and machine does not recover, change this setting to "1".		
002	SC443 Count	*ENG	[0 to 3 / **0** / 1 /step]
	Displays the number of the ITB encodre error. SC443 is displayed if this counter counts to "3".		

WWW.SERVICE-MANUAL.NET

2930	[SecondaryFB: Threshold] Paper Transfer Roller Feed-back: Threshold Adjustment		
	Adjusts the threshold between high resistance (division 1) and low resistance (division 2) at the paper transfer roller. This SP affects SP2931 to SP2939.		
001	Voltage	*ENG	[0 to 7000 / **6000** / 10 –V/step]

2960	[Process Interval]		
001	Additional Time	*ENG	[0 to 10 / **0** / 1 sec/step]
	Adjusts the additional time for ending the machine's process.		

2970	[Cleaning After JOB]		
001	No Refresh	*ENG	[0 to 100 / **50** / 1 /step] 0: No cleaning
	Specifies the threshold sheets for the cleaning of the paper transfer roller without the refresh mode.		
002	Refresh	*ENG	[0 or 1 / **1** / 1 /step] 0: No cleaning, 1: Cleaning
003	Cleaning Counter	*ENG	[0 to 9999 / **-** / 1 page/step]
	This counter is used for the cleaning of the paper transfer roller.		

WWW.SERVICE-MANUAL.NET

2971	T1 Non Image Area ON Timing		
001	Standard Speed	*ENG	[–300 to 260 / **C2.5c: 10** / 10 msec/step] [–240 to 240 / **C2.5d: 30** / 10 msec/step]
	Adjusts the timing for the non-image area bias of the image transfer roller.		
002	Medium Speed	*ENG	[–400 to 290 / **0** / 10 msec/step]
003	Low Speed	*ENG	[–790 to 410 / **0** / 10 msec/step]

2972	B/W Image Request Timing		
	Adjusts the LD firing timing in black and white mode for each process speed.		
001	Standard Speed	*ENG	[0 to 4000 / **0** / 10 msec/step]
002	Medium Speed	*ENG	[0 to 4000 / **0** / 10 msec/step]
003	Low Speed	*ENG	[0 to 4000 / **0** / 10 msec/step]

2973	Forced Process Down Threshold		
001	-	*ENG	[0 to 5000 / **0** / 10 page/step]
	Specifies the threshold pages for the forced processing stop at a continuous printing job. 0: No forced processing stop (default)		

2974	OPC PreCharge Time Control		
	Adjusts the pre-charge time of the drum for each process speed.		
001	Standard Speed	*ENG	[0 to 940 / **0** / 10 msec/step]
002	Medium Speed	*ENG	[0 to 1240 / **90** / 10 msec/step]
003	Low Speed	*ENG	[0 to 2480 / **580** / 10 msec/step]

WWW.SERVICE-MANUAL.NET

2980	-		
001	Continuous Job Page	*ENG	[0 to 300 / **100** / 10 page/step]
002	OPC Drum Idling Time BW	*ENG	[0 to 600 / **30** / 10 sec/step]
003	OPC Drum Idling Time FC	*ENG	[0 to 600 / **30** / 10 sec/step]

2990	Print Duty Control		
001	Duty Control State	*ENG	[0 or 1 / **0** / 1 /step] 0: No limit, 1: Limit
	Limit or does not limit the duty control for a continuous printing job.		
002	Duty Control Thresh Time	*ENG	[0 to 195 / **100** / 10 min./step]
	Specifies the judgment time for the duty control for a continuous printing job.		
003	Duty Control Thresh	*ENG	[0 to 999999999 / **0** / 1 mm/step]
	Specifies the threshold for the duty control for a continuous printing job. 0: No duty control (default)		
004	Forced CPM Down Thresh: No Duty Control	*ENG	[0 to 5000 / **0** / 1 page/step]
	Specifies the threshold page for the forced processing stop without the duty limit.		
005	Drum Stop Time: No Duty Control	*ENG	[300 to 1500 / **500** / 10 msec/step]
	Specifies the drum brake time without the duty limit.		

WWW.SERVICE-MANUAL.NET

006	ITB Stop Time: No Duty Control	*ENG	[300 to 1500 / **500** / 10 msec/step]
	Specifies the ITB brake time without the duty limit.		
007	Forced CPM Down Thresh: Duty Control	*ENG	[0 to 5000 / **1** / 1 page/step]
	Specifies the threshold page for the forced processing stop with the duty limit.		
008	Drum Stop Time: Duty Control	*ENG	[300 to 1500 / **1500** / 10 msec/step]
	Specifies the drum brake time with the duty limit.		
009	ITB Stop Time: Duty Control	*ENG	[300 to 1500 / **1500** / 10 msec/step]
	Specifies the ITB brake time with the duty limit.		
010	Duty Control: Start Time	*ENG	-
	Displays the execution time of the duty limit control.		

WWW.SERVICE-MANUAL.NET

3.3 SYSTEM SP3-XXX

3.3.1 SP3-XXX (PROCESS)

3011	[Process Cont. Manual Execution]		
001	Normal	-	Executes the normal process control manually (potential control). Check the result with SP3-325-001 and 3-012-001 after executing this SP.
002	Density Adjustment	-	Executes the toner density adjustment manually.
003	Pre-ACC	-	Executes the process control that is normally done before ACC. The type of process control is selected with SP3-041-004.
004	Full MUSIC	-	Executes the process control that is normally done at the same time as MUSIC. This SP does the MUSIC (line position adjustment) twice.
005	Normal MUSIC	-	Executes the process control that is normally done at the same time as MUSIC. This SP does the MUSIC (line position adjustment) once.

WWW.SERVICE-MANUAL.NET

3012	[Process Cont. Check Result] Process Control Self-check Result		
	Displays the result of the latest process control self-check. All colors are displayed. The results are displayed in the order “Y C M K” e.g., 11 (Y) 99 (C) 11 (M) 11 (K): The self-check for Cyan failed but the others were successful. See the "Error Condition Tables" in the "Appendix: Process Control Error Conditions" section for details.		
001	History: Latest	*ENG	[1111 to 99999999 / **99999999** / 1/step]
002	Result: Latest 1	*ENG	
003	Result: Latest 2	*ENG	
004	Result: Latest 3	*ENG	
005	Result: Latest 4	*ENG	
006	Result: Latest 5	*ENG	
007	Result: Latest 6	*ENG	
008	Result: Latest 7	*ENG	
009	Result: Latest 8	*ENG	
010	Result: Latest 9	*ENG	

3013	[T Sensor Initial Set: Execution] Developer Initialization Setting		
001	Execution: ALL	-	Executes the developer initialization for each color.
002	Execution: COL	-	
003	Execution: Bk	-	
004	Execution: M	-	
005	Execution: C	-	
006	Execution: Y	-	

WWW.SERVICE-MANUAL.NET

3014	[T Sensor Initial Set Result: Display] Developer Initialization Result: Display		
001	Display: YCMK	*ENG	[0 to 9999 / - / 1 /step] 1: Success, 2 to 9: Failure
	Displays the developer initialization result. See section "Developer Initialization Result" in the "Appendix: Process Control Error Conditions" section for details on the meaning of each code. All colors are displayed. Values are displayed in the order Y C M Bk. e.g., 1 (Y) 2 (C) 1 (M) 1 (Bk): Initialization of Cyan failed but the others succeeded.		

3015	[Forced Toner Supply: Execute] Forced Toner Supply ([Color])		
001	Execution: ALL	-	Executes the manual toner supply to the development unit.
002	Execution: COL	-	
003	Execution: Bk	-	
004	Execution: M	-	
005	Execution: C	-	
006	Execution: Y	-	

3016	[Forced Toner Supply: Setting] Forced Toner Supply Setting ([Color])		
	Specifies the manual toner supply time for each color.		
001	Supply Time: Bk	*ENG	[0 to 30 / **4** / 1 sec/step]
002	Supply Time: M	*ENG	
003	Supply Time: C	*ENG	
004	Supply Time: Y	*ENG	

WWW.SERVICE-MANUAL.NET

3020	[Vt Limit Error]		
	DFU		
001	Delta Vt Threshold	*ENG	[0 to 5 / **5** / 0.01 V/step]
002	Upper Threshold	*ENG	[0 to 5 / **4.7** / 0.01 V/step]
003	Threshold Number of Upper counter	*ENG	[0 to 99 / **20** / 1 time/step]
004	Lower Threshold	*ENG	[0 to 5 / **0.5** / 0.01 V/step]
005	Threshold Number of Lower counter	*ENG	[0 to 99 / **10** / 1 times/step]
006	Upper Counter: Bk	*ENG	[0 to 99 / **0** / 1 times/step]
007	Upper Counter: M	*ENG	
008	Upper Counter: C	*ENG	
009	Upper Counter: Y	*ENG	
010	Lower Counter: Bk	*ENG	
011	Lower Counter: M	*ENG	
012	Lower Counter: C	*ENG	
013	Lower Counter: Y	*ENG	

WWW.SERVICE-MANUAL.NET

3021	[TD Sensor Initial Set] Developer Initialization Setting		
	Specifies the developer agitation time for each color at the developer initialization. **DFU**		
001	Agitation Time: Bk	*ENG	[0 to 200 / **30** / 1 sec/step]
002	Agitation Time: M	*ENG	
003	Agitation Time: C	*ENG	
004	Agitation Time: Y	*ENG	
005-008	Sets the execution flag of the developer initialization for each color. **DFU**		
005	Execution Flag: Bk	*ENG	[0 or 1 / **0** / 1/step] 0: Flag OFF, 1: Flag ON This flag is cleared after executing TD sensor initialization.
006	Execution Flag: M	*ENG	
007	Execution Flag: C	*ENG	
008	Execution Flag: Y	*ENG	
009	Prohibition	*ENG	Enables or disables developer initialization. **DFU** [0 or 1 / **0** / 1/step] 0: Enable, 1: Disable

WWW.SERVICE-MANUAL.NET

3022	[Toner Replenishment Mode] **DFU**		
	Specifies the toner supply time for each color in the toner supply mode.		
001	Supply Number of times: Bk	*ENG	[0 to 30 / **8** / 1 sec/step]
002	Supply Number of times: M	*ENG	[0 to 30 / **6** / 1 sec/step]
003	Supply Number of times: C	*ENG	
004	Supply Number of times: Y	*ENG	
005-008	Sets the execution flag for the toner supply mode for each color.		
005	Execution Flag: Bk	*ENG	[0 or 1 / **0** / 1/step] 0: Flag OFF, 1: Flag ON This flag is cleared after executing TD sensor initialization.
006	Execution Flag: M	*ENG	
007	Execution Flag: C	*ENG	
008	Execution Flag: Y	*ENG	

3041	[Process Control Type]		
001	Voltage Control	*ENG	[0 or 1 / **1** / 1/step] Alphanumeric 0: FIXED (Use the fixed values for the charge DC bias and development DC bias set with SP2-005 and SP2-229.) 1: CONTROL
	Enables or disables potential control.		

WWW.SERVICE-MANUAL.NET

002	LD Power Control	*ENG	[0 or 1 / **1** / 1/step] Alphanumeric 0: FIXED (at the value in SP2221-xxx) 1: CONTROL (adjusted by process control)
	Selects the LD power control mode.		
003	AutoControl Prohibition Set	*ENG	[0 or 1 / **0** / -] 0: Permit, 1: Forbid
	Enables or disables the automatic process control prohibition.		
004	Pre-ACC	*ENG	[0 to 2 / **2** / 1/step] 0: Not Executed 1: Process Control 2: TC Control (TD Adjustment) 3: Not used
	Selects the process control mode that is done before ACC.		
005	Pattern Calculation Method	*ENG	[0 to 2 / **2** / 1/step] 0: FIXED 1: INITIALIZED 2: CALCULATED
	Selects the process control method.		

3043	[TD Adjustment Mode]		
001	Repeat Number: Power ON	*ENG	[0 to 9 / **4** / 1 time/step]
	Specifies the maximum number of repeats of the toner density adjustment at power on. 0: Disabled, 1 to 3: Repeat number, 4: Repeat three times (No consumption mode) 5: Repeat three times (Toner is supplied only when the toner density is too low, and toner is consumed only when the toner density is too dark.) 6 to 9: Disabled		

WWW.SERVICE-MANUAL.NET

002	Repeat Number: Initialization	*ENG	[0 to 9 / **3** / 1 time/step]
	Specifies the maximum number of repeats of the toner density adjustment at the developer initialization. 0: Disabled, 1 to 3: Repeat number, 4: Repeat three times (No consumption mode) 5: Repeat three times (Toner is supplied only when the toner density is too low, and toner is consumed only when the toner density is too dark.) 6 to 9: Disabled		
003	Repeat Number: Non-use	*ENG	[0 to 9 / **0** / 1 time/step]
	Specifies the maximum number of repeats of the toner density adjustment in stand by mode. 0: Disabled, 1 to 3: Repeat number, 4: Repeat three times (No consumption mode) 5: Repeat three times (Toner is supplied only when the toner density is too low, and toner is consumed only when the toner density is too dark.) 6 to 9: Disabled		
004	Repeat Number: ACC	*ENG	[0 to 9 / **3** / 1 time/step]
	Specifies the maximum number of repeats of the toner density adjustment at ACC. 0: Disabled, 1 to 3: Repeat number, 4: Repeat three times (No consumption mode) 5: Repeat three times (Toner is supplied only when the toner density is too low, and toner is consumed only when the toner density is too dark.) 6 to 9: Disabled		
005	Repeat Number: Recovery	*ENG	[0 to 9 / **0** / 1 time/step]
	Not used		

WWW.SERVICE-MANUAL.NET

006	Repeat Number: Job End	*ENG	[0 to 9 / **4** / 1 time/step]
	Specifies the maximum number of repeats of the toner density adjustment at job end. 0: Disabled, 1 to 3: Repeat number, 4: Repeat three times (No consumption mode) 5: Repeat three times (Toner is supplied only when the toner density is too low, and toner is consumed only when the toner density is too dark.) 6 to 9: Disabled		
007	Repeat: Interrupt	*ENG	[0 to 9 / **0** / 1 time/step]
	Specifies the maximum number of repeats of the toner density adjustment during printing. **DFU**		
008	Toner Supply Coefficient	*ENG	[0 to 25.5 / **10** / 0.1 sec/step]
	Adjusts the time for the toner supply mode when a toner density is detected to be low.		
009	Consumption pattern: Bk	*ENG	[0 to 255 / **5** / 1 time/step]
	Specifies the belt mark generating time for checking the black toner density when toner density is detected to be low at the toner density adjustment.		
010	Consumption pattern: M	*ENG	[0 to 255 / **5** / 1 time/step]
	Specifies the belt mark generating time for checking the magenta toner density when toner density is detected to be low at the toner density adjustment.		
011	Consumption pattern: C	*ENG	[0 to 255 / **5** / 1 time/step]
	Specifies the belt mark generating time for checking the cyan toner density when toner density is detected to be low at the toner density adjustment.		
012	Consumption pattern: Y	*ENG	[0 to 255 / **5** / 1 time/step]
	Specifies the belt mark generating time for checking the yellow toner density when toner density is detected to be low at the toner density adjustment.		

WWW.SERVICE-MANUAL.NET

013	T1 Bias: Bk	*ENG	[0 to 80 / **C2.5c: 30, C2.5d: 37** / 1 µA/step]
	Adjusts the image transfer belt bias for Black.		
014	T2 Bias: M	*ENG	[0 to 80 / **C2.5c: 33, C2.5d: 41**/ 1 µA/step]
	Adjusts the image transfer belt bias for Magenta.		
015	T3 Bias: C	*ENG	[0 to 80 / **C2.5c: 30, C2.5d: 37**/ 1 µA/step]
	Adjusts the image transfer belt bias for Cyan.		
016	T4 Bias: Y	*ENG	[0 to 80 / **C2.5c: 38, C2.5d: 47** / 1 µA/step]
	Adjusts the image transfer belt bias for Yellow.		
017	Developer Mixing Time	*ENG	[0 to 250 / **10** / 1 sec/step]
	Specifies the developer mixing time at the toner density adjustment.		
018	Consumption Pattern: LD: DUTY: Bk	*ENG	[0 to 15 / **15** / 1 /step]
	Adjusts the LD duty for the toner consumption mode at the toner density adjustment. In toner consumption mode, toner is discharged when the detected development gamma values (SP3611-001) exceed the target values (SP3611-005) by more than the specified thresholds (SP3239-009).		
019	Consumption Pattern: LD: DUTY: M	*ENG	[0 to 15 / **15** / 1 /step]
	Adjusts the LD duty for the toner consumption mode at the toner density adjustment. In toner consumption mode, toner is discharged when the detected development gamma values (SP3611-002) exceed the target values (SP3611-006) by more than the specified thresholds (SP3239-009).		

WWW.SERVICE-MANUAL.NET

020	Consumption Pattern: LD: DUTY: C	*ENG	[0 to 15 / **15** / 1 /step]
	Adjusts the LD duty for the toner consumption mode at the toner density adjustment. In toner consumption mode, toner is discharged when the detected development gamma values (SP3611-003) exceed the target values (SP3611-007) by more than the specified thresholds (SP3239-009).		
021	Consumption Pattern: LD: DUTY: Y	*ENG	[0 to 15 / **15** / 1 /step]
	Adjusts the LD duty for the toner consumption mode at the toner density adjustment. In toner consumption mode, toner is discharged when the detected development gamma values (SP3611-004) exceed the target values (SP3611-008) by more than the specified thresholds (SP3239-009).		

3044	[Toner Supply Type] Toner Supply Type ([Color])		
	Selects the toner supply method type.		
001	Bk	*ENG	[0 to 4 / **4** / 1/step] Alphanumeric 0: FIXED (with the supply rates stored with SP 3401) 1: PID (Vtref_Fixed) 2: PID (Vtref_Control) 3: MBD (Vtref_Fixed) 4: MBD (Vtref_Control)
002	M	*ENG	
003	C	*ENG	
004	Y	*ENG	

3045	[Toner End Detection: Set]		
	Enables/disables the toner alert display on the LCD.		
001	ON/OFF	*ENG	[0 or 1 / **0** / 1/step] 0: Detect, 1: Not Detect

WWW.SERVICE-MANUAL.NET

3101	[Toner End/Near End]		
	Displays the amount of each color toner. **DFU**		
001	Toner Replenishmen: Bk	*ENG	[1 to 600 / **510** / 1 g/step]
002	Toner Replenishment: M	*ENG	[1 to 600 / **400** / 1 g/step]
003	Toner Replenishment: C	*ENG	
004	Toner Replenishment: Y	*ENG	
005-008	Displays the consumed amount of each color toner.		
005	Toner Consumption: Bk	*ENG	[0 to 3000 / **0** / 0.001 g/step]
006	Toner Consumption: M	*ENG	
007	Toner Consumption: C	*ENG	
008	Toner Consumption: Y	*ENG	
009-012	Displays the remaining amount of each color toner. These are calculated by the operating times of the toner supply pumps.		
009	Toner Remaining: Bk	*ENG	[–50000 to 600 / **0** / 0.001 g/step]
010	Toner Remaining: M	*ENG	
011	Toner Remaining: C	*ENG	
012	Toner Remaining: Y	*ENG	
013-016	Adjusts the threshold of toner near end for each color. The toner near end message appears on the LCD when the remaining toner amount reaches this threshold. When one of these SPs (SP3-101-009 to 012 or -032 to -035) reaches this threshold, toner near end is detected.		
013	Near End Threshold: Bk	*ENG	[0 to 600 / **36** / 1 g/step]
014	Near End Threshold: M	*ENG	[0 to 600 / **30** / 1 g/step]
015	Near End Threshold: C	*ENG	
016	Near End Threshold: Y	*ENG	
017-020	**DFU**		

WWW.SERVICE-MANUAL.NET

017	Cartridge Error Threshold: Bk	*ENG	[–50000 to 0 / **–50000** / 1 g/step]
018	Cartridge Error Threshold: M	*ENG	
019	Cartridge Error Threshold: C	*ENG	
020	Cartridge Error Threshold: Y	*ENG	
021	Delta Vt Threshold	*ENG	[0 to 5 / **0.3** / 0.01 V/step]
	This SP is the threshold for toner end. Delta Vt: Vt-Vtref When both this SP and SP3-101-026 occur at same time, toner end is determined.		
022-025	Displays the total delta Vt (Vt-Vtref) value for each color.These are calculated by pixel counting.		
022	Delta Vt Sum: Bk	*ENG	[0 to 655 / **0** / 0.01 V/step]
023	Delta Vt Sum: M	*ENG	
024	Delta Vt Sum: C	*ENG	
025	Delta Vt Sum: Y	*ENG	
026	Delta Vt Sum Threshold	*ENG	[0 to 255 / **5** / 1 V/step]
028-031	Displays the consumed toner amount calculated with the pixel count for each color.		
028	Pixel: Consumption: Bk	*ENG	[0 to 3000 / **0** / 0.001 g/step]
029	Pixel: Consumption: M	*ENG	
030	Pixel: Consumption: C	*ENG	
031	Pixel: Consumption: Y	*ENG	
032-035	Displays the remaining toner amount for each color, using pixel count.		
032	Pixel: Remaining : Bk	*ENG	[-50000 to 600 / **0** / 0.001 g/step]
033	Pixel: Remaining : M	*ENG	
034	Pixel: Remaining : C	*ENG	
035	Pixel: Remaining : Y	*ENG	

WWW.SERVICE-MANUAL.NET

036-039	Adjusts the threshold of toner end for each color.		
036	End Threshold: Bk	*ENG	Not used
037	End Threshold: M	*ENG	
038	End Threshold: C	*ENG	
039	End Threshold: Y	*ENG	
040-043	Displays the pixel M/A for each color.		
040	Pixel M/A: Bk	*ENG	[0 to 1 / **0.4** / 0.001 mg/cm^2/step]
041	Pixel M/A: M	*ENG	
042	Pixel M/A: C	*ENG	
043	Pixel M/A: Y	*ENG	
044	Delta Vt Threshold Before Near End	*ENG	Adjusts the delta Vt (Vt – Vtref) of toner end before toner near end is detected. [0 to 5 / **0.5** / 0.01 V/step]
045	Delta Vt Sum Threshold Before Near End	*ENG	Adjusts the total delta Vt (Vt – Vtref) of toner end before toner near end is detected. [0 to 255 / **10** / 1 V/step]
046-049	Displays the latest mohno-pump off time.		
046	Mohno Off Time	*ENG	[0 to 0 x FFFFFFFF / **-** / 1 sec/step]
047	Mohno Off Time	*ENG	
048	Mohno Off Time	*ENG	
049	Mohno Off Time	*ENG	

WWW.SERVICE-MANUAL.NET

3102	[Toner End Recovery]		
	Adjusts the number of times toner supply is attempted for each color when the TD sensor continues to detect toner end during toner recovery.		
001	Repeat: Bk	*ENG	[1 to 20 / **5** / 1 time/step]
002	Repeat: M	*ENG	
003	Repeat: C	*ENG	
004	Repeat: Y	*ENG	
005	Bottle Pre-Rotation Control Threshold	*ENG	[0 to 255 / **C2.5c: 110, C2.5d: 80** / 1 /step]

3131	[TE Count m: Display]		
	Display the number of toner end detections for each color.		
001	Bk	*ENG	[0 to 99 / **0** / 1 time/step]
002	M	*ENG	
003	C	*ENG	
004	Y	*ENG	

3201	[TD Sensor: Vt Display]		
	Display the current voltage of the TD sensor for each color.		
001	Current: Bk	*ENG	[0 to 5.5 / **0.01** / 0.01 V/step]
002	Current: M	*ENG	
003	Current: C	*ENG	
004	Current: Y	*ENG	

WWW.SERVICE-MANUAL.NET

3211	[Vt Shift: Display/Set]		
	Adjusts the Vt correction value for each line speed. Thick 1: Middle speed, Thick 2&Fine: Low speed		
001	Thick 1 Shift: Bk	*ENG	[0 to 5 / **C2.5c: 0.15, C2.5d: 0.48** / 0.01 V/step]
002	Thick 1 Shift: M	*ENG	[0 to 5 / **C2.5c: 0.17, C2.5d: 0.47** / 0.01 V/step]
003	Thick 1 Shift: C	*ENG	[0 to 5 / **C2.5c: 0.15, C2.5d: 0.51** / 0.01 V/step]
004	Thick 1 Shift: Y	*ENG	
005	Thick 2 & FINE Shift: Bk	*ENG	[0 to 5 / **C2.5c: 0.51, C2.5d: 0.9** / 0.01 V/step]
006	Thick 2 & FINE Shift: M	*ENG	[0 to 5 / **C2.5c: 0.53, C2.5d: 0.9** / 0.01 V/step]
007	Thick 2 & FINE Shift: C	*ENG	[0 to 5 / **C2.5c: 0.47, C2.5d: 0.8** / 0.01 V/step]
008	Thick 2 & FINE Shift: Y	*ENG	[0 to 5 / **C2.5c: 0.47, C2.5d: 0.8** / 0.01 V/step]
009	Mid TCShift: Bk	*ENG	[-0.5 to 0.5 / **0** / 0.01 V/step]
010	Mid TCShift: M	*ENG	
011	Mid TCShift: C	*ENG	
012	Mid TCShift: Y	*ENG	
013	Low TCShift: Bk	*ENG	[-0.5 to 0.5 / **0** / 0.01 V/step]
014	Low TCShift: M	*ENG	
015	Low TCShift: C	*ENG	
016	Low TCShift: Y	*ENG	

WWW.SERVICE-MANUAL.NET

3221	[Vtcnt: Display/Set]		
	Displays or adjusts the current Vtcnt value for each color.		
001	Current: Bk	*ENG	[2 to 5 / **3.86** / 0.01 V/step]
002	Current: M	*ENG	
003	Current: C	*ENG	
004	Current: Y	*ENG	
005-008	Displays or adjusts the Vtcnt value for each color at developer initialization. **DFU**		
005	Initial: Bk	*ENG	[2 to 5 / **3.86** / 0.01 V/step]
006	Initial: M	*ENG	
007	Initial: C	*ENG	
008	Initial: Y	*ENG	

3222	[Vtref: Display/Set]		
	Displays or adjusts the current Vtref value for each color.		
001	Current: Bk	*ENG	[0 to 5.5 / **3** / 0.01 V/step]
002	Current: M	*ENG	
003	Current: C	*ENG	
004	Current: Y	*ENG	
005-008	Displays or adjusts the Vtref value for each color at developer initialization. **DFU**		
005	Initial: Bk	*ENG	[0 to 5.5 / **3** / 0.01 V/step]
006	Initial: M	*ENG	
007	Initial: C	*ENG	
008	Initial: Y	*ENG	

WWW.SERVICE-MANUAL.NET

009-012	Displays and adjusts Vtref correction by pixel coverage for each color. **DFU**		
009	Pixel Correction: Bk	*ENG	[-5 to 5.5 / **0** / 0.01 V/step]
010	Pixel Correction: M	*ENG	
011	Pixel Correction: C	*ENG	
012	Pixel Correction: Y	*ENG	

3223	[Vtref Upper Lower: Set] **DFU**		
	Adjusts the lower or upper limit value of Vtref for each color.		
001	Lower: Bk	*ENG	[0 to 5 / **2** / 0.01 V/step]
002	Lower: M	*ENG	
003	Lower: C	*ENG	
004	Lower: Y	*ENG	
005	Upper: Bk	*ENG	[0 to 5 / **4** / 0.01 V/step]
006	Upper: M	*ENG	
007	Upper: C	*ENG	
008	Upper: Y	*ENG	
009	Initial TC	*ENG	Adjusts the initial toner concentration. [1 to 15 / **7** / 0.1 wt%/step]
010	Upper: TC	*ENG	Adjusts the upper limit of the toner concentration. [1 to 15 / **9.5** / 0.1 wt%/step]
011	Lower: TC	*ENG	Adjusts the lower limit of the toner concentration. [1 to 15 / **4** / 0.1 wt%/step]
012	Upper Sensitivity	*ENG	Adjusts the upper limit of the TD sensor sensitivity. [0.2 to 0.5 / **0.44** / 0.001 V/wt% /step]
013	Lower Sensitivity	*ENG	Adjusts the lower limit of the TD sensor

WWW.SERVICE-MANUAL.NET

			sensitivity. [0.2 to 0.5 / **0.209** / 0.001 V/wt% /step]
014	Toner Density Between H and M	*ENG	[1 to 10 / **3.5** / 0.1 wt%/step]
015	Toner Density Between M and L	*ENG	[1 to 10 / **3.5** / 0.1 wt%/step]
016	Upper TC:K	*ENG	[1 to 15 / **9** / 0.1 wt%/step]
017	Upper TC:M	*ENG	
018	Upper TC:C	*ENG	
019	Upper TC:Y	*ENG	

3224	[Vtref Correction: Pixel] **DFU**		
	Adjusts the coefficient of Vtref correction for each coverage and color.		
001	Low Coverage Coefficient: Bk	*ENG	[0 to 5 / **1** / 0.1 /step]
002	Low Coverage Coefficient: M	*ENG	
003	Low Coverage Coefficient: C	*ENG	
004	Low Coverage Coefficient: Y	*ENG	
005	High Coverage Coefficient: Bk	*ENG	[0 to 5 / **1** / 0.01 V/step]
006	High Coverage Coefficient: M	*ENG	[0 to 5 / **0.5** / 0.01 V/step]
007	High Coverage Coefficient: C	*ENG	
008	High Coverage Coefficient: Y	*ENG	
009	Low Coverage: Threshold	*ENG	Adjusts the threshold of the low coverage. [0 to 20 / **3** / 0.1 %/step]

WWW.SERVICE-MANUAL.NET

010	High Coverage: Threshold	*ENG	Adjusts the threshold of the high coverage. [0 to 100 / **60** / 1 %/step]
011	TC Upper Limit Correction	*ENG	[0 to 5 / **0** / 0.1 wt%/step]
012	Upper Limit TC: Display: Bk	*ENG	[1 to 15 / **10** / 0.1 wt% /step]
013	Upper Limit TC: Display: M	*ENG	
014	Upper Limit TC: Display: C	*ENG	
015	Upper Limit TC: Display: Y	*ENG	
016	Process Control Execution Threshold	*ENG	[0 to 255 / **50** / 1 time/step]

3230	[Toner Supply MBD] **DFU**		
001	ADD_TIME	*ENG	[0 to 1000 / **200** / 10 msec./step]
002	ADD:K	*ENG	[0 to 2 / **1** / 0.01 /step]
003	ADD:C	*ENG	
004	ADD:M	*ENG	
005	ADD:Y	*ENG	
006	ADD_MidSpd	*ENG	[0.01 to 5 / **1** / 0.01 /step]
007	ADD:LowSpd	*ENG	[0.01 to 5 / **1** / 0.01 /step]
008	MSEC_V	*ENG	[0 to 1 / **0.08** / 0.001 /step]
009	N_Delay	*ENG	[0 to 200 / **27** / 1 /step]
030	PID:I:K	*ENG	[0 to 100 / **C2.5c: 0.32, C2.5d: 0.4** / 0.01 /step]
031	PID:I:C	*ENG	
032	PID:I:M	*ENG	

WWW.SERVICE-MANUAL.NET

033	PID:I:Y	*ENG	
034	PID:P:K	*ENG	[0 to 100 / **C2.5c: 6.4, C2.5d: 8** / 0.01 /step]
035	PID:P:C	*ENG	
036	PID:P:M	*ENG	
037	PID:P:Y	*ENG	
038	PID_I_MidSpd	*ENG	[0 to 5 / **C2.5c: 0.75, C2.5d: 0.6** / 0.01 /step]
039	PID:I:LowSpd	*ENG	[0 to 5 / **C2.5c: 0.38, C2.5d: 0.3** / 0.01 /step]
040	PID_P_MidSpd	*ENG	[0 to 5 / **C2.5c: 0.75, C2.5d: 0.6** / 0.01 /step]
041	PID:P:LowSpd	*ENG	[0 to 5 / **C2.5c: 0.38, C2.5d: 0.3** / 0.01 /step]
060	AWILOW:K	*ENG	[-1 to 1 / **C2.5c: 0.156, C2.5d: 0.125** / 0.01 /step]
061	AWILOW:C	*ENG	
062	AWILOW:M	*ENG	
063	AWILOW:Y	*ENG	
064	AWPUP:K	*ENG	[-1 to 1 / **1** / 0.0001 /step]
065	AWPUP:C	*ENG	
066	AWPUP:M	*ENG	
067	AWPUP:Y	*ENG	
068	AWILOW_MidSpd	*ENG	[0 to 100 / **C2.5c: 1.33, C2.5d: 1.66** / 0.01 /step]

WWW.SERVICE-MANUAL.NET

069	AWPUP_MidSpd	*ENG	[0 to 100 / **1** / 0.01 /step]
070	AWILOW:LowSpd	*ENG	[0 to 100 / **C2.5c: 2.66, C2.5d: 1.66** / 0.01 /step]
071	AWPUP:LowSpd	*ENG	[0 to 100 / **1** / 0.01 /step]
090	SMITH:K	*ENG	[0 to 2 / **C2.5c: 0.09, C2.5d: 0.07** / 0.01 /step]
091	SMITH:C	*ENG	
092	SMITH:M	*ENG	
093	SMITH:Y	*ENG	
094	SMITH_MidSpd	*ENG	[0 to 5 / **C2.5c: 1.33, C2.5d: 1.71** / 0.01 /step]
095	SMITH:LowSpd	*ENG	[0 to 5 / **C2.5c: 2.66, C2.5d: 3.42** / 0.01 /step]
100	Int_conserve_I_K	*ENG	[-1000 to 1000 / **0** / 0.0001 /step]
101	Int_conserve_I_C	*ENG	
102	Int_conserve_I_M	*ENG	
103	Int_conserve_I_Y	*ENG	
110	ANC_ref_conserve_K	*ENG	[-1000 to 1000 / **0** / 0.0001 /step]
111	ANC_ref_conserve_C	*ENG	
112	ANC_ref_conserve_M	*ENG	
113	ANC_ref_conserve_Y	*ENG	
120	ANC_A3_K	*ENG	[0 to 1 / **C2.5c: 0.12, C2.5d: 0.15** / 0.001 /step]
121	ANC_A3_C	*ENG	
122	ANC_A3_M	*ENG	

WWW.SERVICE-MANUAL.NET

123	ANC_A3_Y	*ENG	
124	ANC_A4_K	*ENG	[0 to 1 / **C2.5c: 0.11, C2.5d: 0.14** / 0.001 /step]
125	ANC_A4_C	*ENG	
126	ANC_A4_M	*ENG	
127	ANC_A4_Y	*ENG	
128	ANC_A3_MidSpd	*ENG	[0 to 5 / **C2.5c: 0.66, C2.5d: 0.53** / 0.01 /step]
129	ANCA4T_MidSpd	*ENG	[0 to 5 / **C2.5c: 0.72, C2.5d: 0.57** / 0.01 /step]
130	ANC_A3_LowSpd	*ENG	[0 to 1 / **C2.5c: 0.41, C2.5d: 0.33** / 0.001 /step]
131	ANCA4T_LowSpd	*ENG	[0 to 1 / **C2.5c: 0.36, C2.5d: 0.28** / 0.001 /step]
150	AWPNI_K	*ENG	[-10 to 10 / **0.2** / 0.001 /step]
151	AWPNI_C	*ENG	
152	AWPNI_M	*ENG	
153	AWPNI_Y	*ENG	
154	PID	*ENG	[0 to 5 / **1** / 0.01 /step]
180	ANCLA_K	*ENG	[0 to 1 / **C2.5c: 0.16, C2.5d: 0.21** / 0.001 /step]
181	ANCLA_C	*ENG	
182	ANCLA_M	*ENG	
183	ANCLA_Y	*ENG	
184	ANCLB_K	*ENG	[0 to 1 / **C2.5c: 0.21, C2.5d: 0.25** / 0.001 /step]

WWW.SERVICE-MANUAL.NET

185	ANCLB_C	*ENG	
186	ANCLB_M	*ENG	
187	ANCLB_Y	*ENG	
188	ANCLA_MidSpd	*ENG	[0 to 5 / **C2.5c: 0.75, C2.5d: 0.57** / 0.01 /step]
189	ANCLB_MidSpd	*ENG	[0 to 5 / **C2.5c: 0.71, C2.5d: 0.6** / 0.01 /step]
190	ANCLA_LowSpd	*ENG	[0 to 5 / **C2.5c: 0.37, C2.5d: 0.28** / 0.01 /step]
191	ANCLB_LowSpd	*ENG	[0 to 5 / **C2.5c: 0.28, C2.5d: 0.24** / 0.01 /step]
210	PIX_TBL_1	*ENG	[0 to 5 / **1** / 0.01 /step]
211	PIX_TBL_2	*ENG	
212	PIX_TBL_3	*ENG	
213	PIX_TBL_4	*ENG	
214	PIX_TBL_5	*ENG	
215	PIX_TBL_6	*ENG	[0 to 5 / **1** / 0.01 /step]
216	PIX_TBL_7	*ENG	
217	PIX_TBL_8	*ENG	
218	PIX_TBL_9	*ENG	
219	PIX_TBL_10	*ENG	
220	PIX_TBL_11	*ENG	
221	PIX_TBL_12	*ENG	

WWW.SERVICE-MANUAL.NET

222	PIX_COR_K	*ENG	[0 to 5 / **1** / 0.01 /step]
223	PIX_COR_C	*ENG	
224	PIX_COR_M	*ENG	
225	PIX_COR_Y	*ENG	
226	SEL_PIX_AVE	*ENG	[1 to 5 / **2** / 1 /step]
231	PID_I_LIM1_Std	*ENG	[0 to 1 / **C2.5c: 0.093, C2.5d: 0.113** / 0.001/step]
232	PID_I_LIM1_MidSpd	*ENG	[0 to 1 / **0.068** / 0.001/step]
233	PID_I_LIM1_LowSpd	*ENG	[0 to 1 / **0.036** / 0.001/step]
234	PID_I_LIM2_Std	*ENG	[0 to 1 / **C2.5c: 0.093, C2.5d: 0.113** / 0.001/step]
235	PID_I_LIM2_MidSpd	*ENG	[0 to 1 / **0.068** / 0.001/step]
236	PID_I_LIM2_LowSpd	*ENG	[0 to 1 / **0.036** / 0.001/step]
237	PID_P_LIM1_Std	*ENG	[0 to 1 / **C2.5c: 0.093, C2.5d: 0.113** / 0.001/step]
238	PID_ P _LIM1_MidSpd	*ENG	[0 to 1 / **0.068** / 0.001/step]
239	PID_ P _LIM1_LowSpd	*ENG	[0 to 1 / **0.036** / 0.001/step]
240	PID_ P _LIM2_Std	*ENG	[0 to 1 / **C2.5c: 0.093, C2.5d: 0.113** / 0.001/step]
241	PID_ P _LIM2_MidSpd	*ENG	[0 to 1 / **0.068** / 0.001/step]
242	PID_ P _LIM2_LowSpd	*ENG	[0 to 1 / **0.036** / 0.001/step]
243	PID_I_STDtoLOW	*ENG	[0 to 5/ **C2.5c: 0.38, C2.5d: 0.3** / 0.01/step]

WWW.SERVICE-MANUAL.NET

244	PID_I_LOWtoSTD	*ENG	[0 to 5/ **C2.5c: 2.66, C2.5d: 3.31** / 0.01/step]
245	PID_I_STDtoMID	*ENG	[0 to 5/ **C2.5c: 0.75, C2.5d: 0.6** / 0.01/step]
246	PID_I_MIDtoSTD	*ENG	[0 to 5/ **C2.5c: 1.33, C2.5d: 1.66** / 0.01/step]
247	PID_I_MIDtoLOW	*ENG	[0 to 5/ **0.5** / 0.01/step]
248	PID_I_LOWtoMID	*ENG	[0 to 5/ **2** / 0.01/step]

3231	[Toner Supply: Setting]		
	Adjusts the coefficient of the toner supply time for each color. **DFU**		
001	Replacement Coefficient:Bk	*ENG	[0.5 to 9.99 / **1.66** / 0.01 /step]
002	Replacement Coefficient: M	*ENG	[0.5 to 9.99 / **1.66**/ 0.01 /step]
003	Replacement Coefficient: C	*ENG	[0.5 to 9.99 / **1.6** / 0.01 /step]
004	Replacement Coefficient: Y	*ENG	[0.5 to 9.99 / **1.66** / 0.01 /step]

3232	[Toner Supply Coefficient: Setting] **DFU**		
001	Vt Proportion: Bk	*ENG	[0 to 2550 / **50** / 1 /step]
002	Vt Proportion: M	*ENG	
003	Vt Proportion: C	*ENG	
004	Vt Proportion: Y	*ENG	
005	Pixel Proportion: Bk	*ENG	[0 to 2.55 / **0.47** / 0.01 /step]
006	Pixel Proportion: M	*ENG	
007	Pixel Proportion: C	*ENG	

WWW.SERVICE-MANUAL.NET

008	Pixel Proportion: Y	*ENG	
009	Vt Integral Control: Bk	*ENG	[0 to 2550 / **500** / 1 /step]
010	Vt Integral Control: M	*ENG	
011	Vt Integral Control: C	*ENG	
012	Vt Integral Control: Y	*ENG	
013	Vt Sum Times: Bk	*ENG	[1 to 255 / **20** / 1 time/step]
014	Vt Sum Times: M	*ENG	
015	Vt Sum Times: C	*ENG	
016	Vt Sum Times: Y	*ENG	

3233	[Pixel Proportion Coefficient 2: Setting] **DFU**		
001	Correction Coefficient: 1	*ENG	[0 to 2.55 / **1** / 0.01 /step]
002	Correction Coefficient: 2	*ENG	[0 to 2.55 / **0.5** / 0.01 /step]
003	Correction Coefficient: 3	*ENG	[0 to 2.55 / **0** / 0.01 /step]
004	Correction Coefficient: 4	*ENG	[0 to 2.55 / **0.25** / 0.01 /step]
005	Correction Coefficient: 5	*ENG	[0 to 2.55 / **0.5** / 0.01 /step]

3234	[Pixel Proportion Coefficient 3: Setting] **DFU**		
001	Correction Value 1	*ENG	[-0.1 to 0 / -**0.01** / 0.01 /step]
002	Correction Value 2	*ENG	[0 to 0.1 / **0.01** / 0.01 /step]

WWW.SERVICE-MANUAL.NET

3235	[Toner Supply Coefficient: Display] **DFU**		
001	Pixel Proportion 2: Bk	*ENG	[0 to 2.55 / **1** / 0.01 /step]
002	Pixel Proportion 2: M	*ENG	
003	Pixel Proportion 2: C	*ENG	
004	Pixel Proportion 2: Y	*ENG	
005	Pixel Proportion 3: Bk	*ENG	[0.7 to 1.3 / **1** / 0.01 /step]
006	Pixel Proportion 3: M	*ENG	
007	Pixel Proportion 3: C	*ENG	
008	Pixel Proportion 3: Y	*ENG	
009	Vt Integral: Bk	*ENG	[-255 to 255 / **0** / 0.01 /step]
010	Vt Integral: M	*ENG	
011	Vt Integral: C	*ENG	
012	Vt Integral: Y	*ENG	

3236	[Toner Supply Consumption: Display] **DFU**		
	Displays the toner amount of the latest toner supply for each color.		
001	Latest: Bk	*ENG	[0 to 40000 / **0** / 0.1 mg/step]
002	Latest: M	*ENG	
003	Latest: C	*ENG	
004	Latest: Y	*ENG	

3237	[Developer Mixing Setting] **DFU**		
	Displays the toner amount of the latest toner supply for each color.		
001	Mixing Time	*ENG	[0 to 200 / **5** / 1 sec/step]

WWW.SERVICE-MANUAL.NET

3238	[Vt Target: Setting] **DFU**		
	Displays the Vt target value at developer initialization.		
001	Bk	*ENG	[0 to 5 / **2.5** / 0.01 V/step]
002	M	*ENG	
003	C	*ENG	
004	Y	*ENG	

3239	[Vtref Correction: Setting]		
	Adjusts the parameter for Vtref correction at the process control.		
001	(+)Consumption: Bk	*ENG	[0 to 1 / **0.05** / 0.01 V/step]
002	(+)Consumption: M	*ENG	
003	(+)Consumption: C	*ENG	
004	(+)Consumption: Y	*ENG	
005	(-)Consumption: Bk	*ENG	
006	(-)Consumption: M	*ENG	
007	(-)Consumption: C	*ENG	
008	(-)Consumption: Y	*ENG	
009-012	Threshold for development gamma rank.		
009	P Rank 1 Threshold	*ENG	[0 to 2 / **0.2** / 0.1 /step]
010	P Rank 2 Threshold	*ENG	[0 to 2 / **0.05** / 0.1 /step]
011	P Rank 3 Threshold	*ENG	[-2 to 0 / **-0.05** / 0.1 /step]
012	P Rank 4 Threshold	*ENG	[-2 to 0 / **-0.2** / 0.1 /step]

WWW.SERVICE-MANUAL.NET

013-014	Threshold for image density rank on the image transfer belt.		
013	T Rank 1 Threshold	*ENG	[-1 to 0 / **-0.2** / 0.01 V/step]
014	T Rank 2 Threshold	*ENG	[0 to 1 / **0.2** / 0.01 V/step]

3241	[Background Potential Setting]		
001	Coefficient: Bk	*ENG	These are parameters for calculating the charge bias referring to the development bias at process control. [-1000 to 1000 / **0** / 1 /step] DC charge bias = Development bias x (1 + 0.001 x these vales) + SP3-241-005 to -008
002	Coefficient: M	*ENG	
003	Coefficient: C	*ENG	
004	Coefficient: Y	*ENG	
005	Offset: Bk	*ENG	These are additional values for calculating the charge bias referring to the development bias at process control. [0 to 255 / **140** / 1 V/step] DC charge bias = Development bias x (1 + 0.001 x SP3-241-001 to -004) + these values
006	Offset: M	*ENG	
007	Offset: C	*ENG	
008	Offset: Y	*ENG	

3242	[LD Power Setting]		
	Adjusts the coefficient for LD power control value at the process control.		
001	StdSpd:Coefficient: Bk	*ENG	[-1000 to 1000 / **124** / 1 /step]
002	StdSpd:Coefficient: M	*ENG	
003	StdSpd:Coefficient: C	*ENG	
004	StdSpd:Coefficient: Y	*ENG	
005	StdSpd:Offset: Bk	*ENG	[-1000 to 1000 / **26** / 1 /step]
006	StdSpd:Offset: M	*ENG	

WWW.SERVICE-MANUAL.NET

007	StdSpd:Offset: C	*ENG	
008	StdSpd:Offset: Y	*ENG	
009	MidSpd:coef:Bk	*ENG	[-1000 to 1000 / **101** / 1 /step]
010	MidSpd:coef:M	*ENG	[-1000 to 1000 / **62** / 1 /step]
011	MidSpd:coef:C	*ENG	[-1000 to 1000 / **99** / 1 /step]
012	MidSpd:coef:Y	*ENG	[-1000 to 1000 / **74** / 1 /step]
013	MidSpd:offset:Bk	*ENG	[-1000 to 1000 / **69** / 1 /step]
014	MidSpd:offset:M	*ENG	[-1000 to 1000 / **95** / 1 /step]
015	MidSpd:offset:C	*ENG	[-1000 to 1000 / **63** / 1 /step]
016	MidSpd:offset:Y	*ENG	[-1000 to 1000 / **82** / 1 /step]
017	LowSpd:Coef:Bk	*ENG	[-1000 to 1000 / **81** / 1 /step]
018	LowSpd:Coef:M	*ENG	[-1000 to 1000 / **61** / 1 /step]
019	LowSpd:Coef:C	*ENG	[-1000 to 1000 / **86** / 1 /step]
020	LowSpd:Coef:Y	*ENG	[-1000 to 1000 / **67** / 1 /step]
021	LowSpd:offset:Bk	*ENG	[-1000 to 1000 / **82** / 1 /step]
022	LowSpd:offset:M	*ENG	[-1000 to 1000 / **92** / 1 /step]
023	LowSpd:offset:C	*ENG	[-1000 to 1000 / **68** / 1 /step]
024	LowSpd:offset:Y	*ENG	[-1000 to 1000 / **87** / 1 /step]

WWW.SERVICE-MANUAL.NET

3243	[DevBias_SpdCorrectSetting]		
	Adjusts the coefficient or offset value for development bias correction for each speed.		
001	MidSpd:Coef:Bk	*ENG	[0.5 to 1.5 / **1** / 0.01 /step]
002	MidSpd:Coef:M	*ENG	
003	MidSpd:Coef:C	*ENG	
004	MidSpd:Coef:Y	*ENG	
005	MidSpd:offset:Bk	*ENG	[-128 to 127 / **0** / 1 V/step]
006	MidSpd:offset:M	*ENG	
007	MidSpd:offset:C	*ENG	
008	MidSpd:offset:Y	*ENG	
009	LowSpd:Coef:Bk	*ENG	[0.5 to 1.5 / **0.87** / 0.01 /step]
010	LowSpd:Coef:M	*ENG	[0.5 to 1.5 / **0.96** / 0.01 /step]
011	LowSpd:Coef:C	*ENG	
012	LowSpd:Coef:Y	*ENG	
013	LowSpd:offset:Bk	*ENG	[-128 to 127 / **0** / 1 V/step]
014	LowSpd:offset:M	*ENG	[-128 to 127 / **-20** / 1 V/step]
015	LowSpd:offset:C	*ENG	
016	LowSpd:offset:Y	*ENG	

WWW.SERVICE-MANUAL.NET

3251	[Coverage]		
	These (-001 to -016) are coefficients for SP3-222-009 to -012.		
001	Latest Pixel: Bk	*ENG	Displays the latest coverage for each color. [0 to 9999 / **0** / 1 cm^2/step]
002	Latest Pixel: M	*ENG	
003	Latest Pixel: C	*ENG	
004	Latest Pixel: Y	*ENG	
005-008	Displays the average coverage of each color for the Vtref correction. "Average S" is defined when the number of developed pages does not reach the number specified with SP3251-017.		
005	Average S: Bk	*ENG	[0 to 100 / **5** / 0.01 %/step]
006	Average S: M	*ENG	
007	Average S: C	*ENG	
008	Average S: Y	*ENG	
009-012	Displays the average coverage of each color for the Vtref correction. "Average M" is defined when the number of developed pages does not reach the number specified with SP3251-018.		
009	Average M: Bk	*ENG	[0 to 100 / **5** / 0.01 %/step]
010	Average M: M	*ENG	
011	Average M: C	*ENG	
012	Average M: Y	*ENG	

WWW.SERVICE-MANUAL.NET

013-016	Displays the average coverage of each color for the Vtref correction. "Average L" is defined when the number of developed pages does not reach the number specified with SP3-251-019.		
013	Average L: Bk	*ENG	[0 to 100 / **5** / 0.01 %/step]
014	Average L: M	*ENG	
015	Average L: C	*ENG	
016	Average L: Y	*ENG	
017-019	Adjusts the threshold for SP3-251-005 to -016.		
017	Total Page Setting: S	*ENG	[1 to 100 / **10** / 1 sheet/step]
018	Total Page Setting: M	*ENG	[1 to 500 / **10** / 1 sheet/step]
019	Total Page Setting: L	*ENG	[1 to 999 / **50** / 1 sheet/step]
020-023	Adjusts the threshold for SP3-251-024 to -027.		
020	Total Page Setting: S2	*ENG	[1 to 100 / **40** / 1 sheet/step]
021	Total Page Setting: M2	*ENG	[1 to 500 / **10** / 1 sheet/step]
022	Total Page Setting: L2	*ENG	[1 to 999 / **50** / 1 sheet/step]
024-027	Displays the latest coverage ratio for each color.		
024	Latest Coverage: Bk	*ENG	[0 to 100 / - / 0.01 %/step]
025	Latest Coverage: M	*ENG	
026	Latest Coverage: C	*ENG	
027	Latest Coverage: Y	*ENG	
028	Displays the threshold of whether to perform developer churning or not.		
	DevMix Threshold	*ENG	[0 to 100 / **20** / 1 %/step]

WWW.SERVICE-MANUAL.NET

3311	[ID Sensor Detection Value: Voffset]		
	Displays the ID sensor (regular) offset voltage for Vsg adjustments.		
001	Voffset reg: Bk	*ENG	[0 to 5 / **0** / 0.01 V/step]
002	Voffset reg: M	*ENG	[0 to 5.5 / **0** / 0.01 V/step]
003	Voffset reg: C	*ENG	
004	Voffset reg: Y	*ENG	
005-007	Displays the ID sensor (diffusion) offset voltage for Vsg adjustments.		
005	Voffset dif: M	*ENG	[0 to 5.5 / **0** / 0.01 V/step]
006	Voffset dif: C	*ENG	
007	Voffset dif: Y	*ENG	
008-010	Displays the ID sensor offset voltage for Vsg adjustments.		
008	Voffset TM (Front)	*ENG	[0 to 5.5 / **0** / 0.01 V/step]
009	Voffset TM (Center)	*ENG	
010	Voffset TM (Rear)	*ENG	

3321	[Vsg Adjustment: Execution]		
010	P/TM Sensor All	-	Execute the ID sensor initialization setting for all sensors

WWW.SERVICE-MANUAL.NET

3322	[Vsg Adjustment Result: Vsg]		
	Displays the result value of the Vsg adjustment for each sensor.		
001	Vsg reg: Bk	*ENG	[0 to 5.5 / **0** / 0.01 V/step]
002	Vsg reg: M	*ENG	
003	Vsg reg: C	*ENG	
004	Vsg reg: Y	*ENG	
005	Vsg dif: M	*ENG	
006	Vsg dif: C	*ENG	
007	Vsg dif: Y	*ENG	
008	Vsg TM (Front)	*ENG	
009	Vsg TM (Center)	*ENG	
010	Vsg TM (Rear)	*ENG	

3323	[Vsg Adjustment Result: Ifsg] **DFU**		
001	Ifsg: Bk	*ENG	[0 to 50 / **0** / 0.1 mA/step]
002	Ifsg: M	*ENG	
003	Ifsg: C	*ENG	
004	Ifsg: Y	*ENG	
005	Ifsg TM (Front)	*ENG	[0 to 50 / **0** / 0.1 mA/step]
006	Ifsg TM (Center)	*ENG	
007	Ifsg TM (Rear)	*ENG	

WWW.SERVICE-MANUAL.NET

3324	[Vsg Adjustment: Set] **DFU**		
003	Vofset Error Counter	*ENG	[0 to 99 / **0** / 0.1 time/step]
004	Vofset Threshold	*ENG	[0 to 5 / **1** / 0.01 V/step]
005	Vsg Upper Threshold	*ENG	[0 to 5 / **4.5** / 0.01 V/step]
006	Vsg Lower Threshold	*ENG	[0 to 5 / **3.5** / 0.01 V/step]

3325	[Vsg Adjustment Result]		
	Displays the result of the Vsg adjustment. The displayed numbers mean the result of each sensor (sensor for Front, sensor for Bk, sensor for Cyan, sensor for Center, sensor for Magenta, sensor for Yellow and sensor for Rear).		
001	Latest	*ENG	[111111 to 999999 / **999999** / 1 /step] 9: Unexpected error 3: Offset voltage error 2: Vsg adjustment value error 1: O.K
002	Result: Latest 1	*ENG	
003	Result: Latest 2	*ENG	
004	Result: Latest 3	*ENG	
005	Result: Latest 4	*ENG	
006	Result: Latest 5	*ENG	
007	Result: Latest 6	*ENG	
008	Result: Latest 7	*ENG	
009	Result: Latest 8	*ENG	
010	Result: Latest 9	*ENG	

WWW.SERVICE-MANUAL.NET

3361	[ID Sensor Sensitivity: Display] **Not Used**		
001	K2K (Latest)	*ENG	[0 to 5 / - / 0.0001 /step]
002	K5K (Latest)	*ENG	
003	K2M (Latest)	*ENG	
004	K5M (Latest)	*ENG	
005	K2C (Latest)	*ENG	
006	K5C (Latest)	*ENG	
007	K2Y (Latest)	*ENG	
008	K5Y (Latest)	*ENG	

3362	[ID Sensor Sensitivity: Setting] **DFU**		
001	K2: Upper	*ENG	[0 to 1 / **0.32** / 0.01 /step]
002	K2: Lower	*ENG	[0 to 1 / **0.22** / 0.01 /step]
003	K5: Upper	*ENG	[0 to 10 / **5** / 0.01 /step]
004	K5: Lower	*ENG	[0 to 1 / **0.5** / 0.01 /step]
005	Kn: Upper	*ENG	[0 to 1 / **0.1** / 0.01 /step]
006	Kn: Lower	*ENG	[0 to 1 / **1** / 0.01 /step]
007	K5 Edit Point	*ENG	[0 to 1 / **0.15** / 0.01 /step]
008	K5 Target Voltage	*ENG	[0 to 5 / **1.63** / 0.01 V/step]
009	K5 Approximate Method	*ENG	[0 to 1 / **1** / 1 /step] 0:Linear, 1: Curve
010	K2: Upper/Lower Limit Coefficient 1	*ENG	[0 to 1 / **0** / 0.01 /step]

WWW.SERVICE-MANUAL.NET

011	K2: Upper Limit Correction	*ENG	[–0.2 to 0.4 / **0.03** / 0.01 /step]
012	K2: Lower Limit Correction	*ENG	[–0.2 to 0.4 / **–0.03** / 0.01 /step]
013	Diffusion Correction: M	*ENG	[0.75 to 1.35 / **1** / 0.01 /step]
014	Diffusion Correction: C	*ENG	
015	Diffusion Correction: Y	*ENG	
016	K2: Check: M	*ENG	[0 to 1 / **0.25** / 0.001 /step]
017	K2: Check: C	*ENG	
018	K2: Check: Y	*ENG	

3363	[ID Pattern Timing Setting] **DFU**		
001	Scan YCMBk	*ENG	Adjusts the detection timing for the process control pattern. [-500 to 500 / **13.7** / 1 mm/step]
002	Detection Delay Time	*ENG	Adjusts the timing when the paper transfer unit is kept away from the image transfer belt. [0 to 2500 / **0** / 1 msec/step]
003	Delay Time	*ENG	Adjusts the processing timing for the process control pattern. [0 to 2500 / **880** / 1 msec/step]
004	MUSIC Delay Time	*ENG	Adjusts the processing timing for the pattern that is used for the line position adjustment. [-2500 to 2500 / **300** / 1 msec/step]

WWW.SERVICE-MANUAL.NET

3371	[M/A Calculation] **DFU**		
001	Correction Coefficient: Bk	*ENG	[0.5 to 2.0 / **1** / 0.01 /step]
002	Correction Coefficient: M	*ENG	[0.5 to 2.0 / **1** / 0.01 /step]
003	Correction Coefficient: C	*ENG	[0.5 to 2.0 / **1** / 0.01 /step]
004	Correction Coefficient: Y	*ENG	[0.5 to 2.0 / **1** / 0.01 /step]
005	Correction Coefficient: Bk	*ENG	[0.5 to 2.0 / **1** / 0.01 /step]
006	Correction Coefficient: M	*ENG	[0.5 to 2.0 / **1** / 0.01 /step]
007	Correction Coefficient: C	*ENG	[0.5 to 2.0 / **0.96** / 0.01 /step]
008	Correction Coefficient: Y	*ENG	[0.5 to 2.0 / **1.04** / 0.01 /step]

3401	[Fixed Supply Mode]		
	Adjusts the toner supply rate in the fixed toner supply mode.		
001	Fixed Rate: Bk	*ENG	[0 to 100 / **5** / 1 %/step] These SPs are used only when SP3-044 is set to "1".
002	Fixed Rate: M	*ENG	
003	Fixed Rate: C	*ENG	
004	Fixed Rate: Y	*ENG	

3411	[Toner Supply Rate: Display]		
	Displays the current toner supply rate.		
001	Latest: Bk	*ENG	[0 to 100 / **-** / 1 %/step]
002	Latest: M	*ENG	
003	Latest: C	*ENG	
004	Latest: Y	*ENG	

WWW.SERVICE-MANUAL.NET

3421	[Toner Supply Range]		
001	Upper Limit: Bk	*ENG	Adjusts the toner supply rate during printing. [0 to 100 / **100** / 1%/step]
002	Upper Limit: M	*ENG	
003	Upper Limit: C	*ENG	
004	Upper Limit: Y	*ENG	
005	Minimum Supply Time: Bk	*ENG	Adjusts the minimum toner supply time. [0 to 1000 / **0** / 1 msec/step]
006	Minimum Supply Time: M	*ENG	
007	Minimum Supply Time: C	*ENG	
008	Minimum Supply Time: Y	*ENG	

3451	[Toner Supply Carry Over: Display] **DFU**		
001	Bk	*ENG	[0 to 10000 / **0** / 1 msec/step]
002	M	*ENG	
003	C	*ENG	
004	Y	*ENG	

3452	[Toner Supply Carry Over: Setting] **DFU**		
001	Maximum: Bk	*ENG	[0 to 10000 / **1000** / 1 msec/step]
002	Maximum: M	*ENG	
003	Maximum: C	*ENG	
004	Maximum: Y	*ENG	

WWW.SERVICE-MANUAL.NET

3501	[Process Control Target M/A]		
	Adjusts the target M/A.		
001	Maximum M/A: Bk	*ENG	[0 to 1 / **0.444** / 0.001 mg/cm^2/step]
002	Maximum M/A: M	*ENG	
003	Maximum M/A: C	*ENG	
004	Maximum M/A: Y	*ENG	

3510	[Pixel Adj. Sheet Counter: Display]		
	Displays the total page counter for each adjustment mode.		
001	Potential Control: BW	*ENG	[0 to 2000 / **0** / 1 page/step]
002	Potential Control: FC	*ENG	
003	Power ON: BW	*ENG	
004	Power ON: FC	*ENG	
005	MUSIC: BW	*ENG	
006	MUSIC: FC	*ENG	
007	Vsg Adj.	*ENG	
008	Charge AC Control	*ENG	
009	MUSIC: Power ON: BW	*ENG	
010	MUSIC: Power ON: FC	*ENG	

WWW.SERVICE-MANUAL.NET

3511	[Execution Interval: Setting]		
	Adjusts the threshold for each adjustment mode.		
001	Job End: Potential Control: BW	*ENG	[0 to 2000 / **250** / 1 page/step]
002	Job End: Potential Control: FC	*ENG	[0 to 2000 / **100** / 1 page/step]
003	Interrupt: Potential Control: BW	*ENG	[0 to 2000 / **500** / 1 page/step]
004	Interrupt: Potential Control: FC	*ENG	[0 to 2000 / **200** / 1 page/step]
005	Initial: Potential Control: BW	*ENG	[0 to 2000 / **250** / 1 page/step]
006	Initial: Potential Control: FC	*ENG	[0 to 2000 / **100** / 1 page/step]
007	Vsg Adj. Counter	*ENG	[0 to 2000 / **0** / 1 page/step]
008	Charge AC Control Counter	*ENG	
019	Environmental Correction	*ENG	[0 or 1 / **1** / 1 /step] 0: Not Correct (OFF), 1: Correct (ON)
020	Gamma Correction	*ENG	[0 or 1 / **1** / 1 /step] 0: Not Correct (OFF), 1: Correct (ON)
021	Non-use Time Correction	*ENG	[0 or 1 / **1** / 1 /step] 0: Not Correct (OFF), 1: Correct (ON)
022	Correction Coefficient 1: JE: BW	*ENG	[0 to 1 / **0.2** / 0.01 page/step]
023	Correction Coefficient 2: JE: BW	*ENG	[0 to 1 / **1** / 0.01/step]
024	Correction Coefficient 1: JE: FC	*ENG	[0 to 1 / **0.5** / 0.01/step]

WWW.SERVICE-MANUAL.NET

025	Correction Coefficient 2: JE: FC	*ENG	[0 to 1 / **1** / 0.01/step]
026	Correction Coefficient 1: Interrupt: BW	*ENG	[0 to 1 / **0.1** / 0.01/step]
027	Correction Coefficient 2: Interrupt: BW	*ENG	[0 to 1 / **1** / 0.01/step]
028	Correction Coefficient 1: Interrupt: FC	*ENG	[0 to 1 / **0.25** / 0.01/step]
029	Correction Coefficient 2: Interrupt: FC	*ENG	[0 to 1 / **1** / 0.01/step]
030	Max. Number Correction Threshold	*ENG	[0 to 99 / **5** / 1/step]
031	Max. Number Correction Counter	*ENG	[0 to 255 / **0** / 1/step]

3512	[Image Quality Adj.: Interval]		
	Adjusts the timing for execution of process control and line position adjustment.		
001	During Job	*ENG	[0 to 100 / **30** / 1 page/step]
002	During Stand-by	*ENG	[0 to 100 / **10** / 1 minute/step]

3513	[PCU Motor Stop Time: Bk]		
	Displays the last time that the PCDU motors stopped. These are used for process control execution timing.		
001	Year	*ENG	[0 to 99 / **0** / 1/step]
002	Month	*ENG	[1 to 12 / **1** / 1/step]
003	Date	*ENG	[1 to 31 / **1** / 1/step]
004	Hour	*ENG	[0 to 23 / **0** / 1/step]
005	Minute	*ENG	[0 to 59 / **0** / 1/step]

WWW.SERVICE-MANUAL.NET

3514	[Environmental Display: Job End]		
	Displays the environmental conditions for the last job. These are used for process control execution timing.		
001	Temperature	*ENG	[-1280 to 1270 / **0** / 0.1°C/step]
002	Relative Humidity	*ENG	[0 to 1000 / **-** / 0.1%RH/step]
003	Absolute Humidity	*ENG	[0 to 1000 / **-** / 0.1 g/cm^3/step]

3515	[Execution Interval: Display]		
	Displays the current interval for process control execution. When the machine calculates the timing for process control, it uses a number of conditions. These are the results after considering all the conditions.		
001	Job End: Potential Control: BW	*ENG	[0 to 2000 / **500** / 1 page/step]
002	Job End: Potential Control: FC	*ENG	[0 to 2000 / **200** / 1 page/step]
003	Interrupt: Potential Control: BW	*ENG	[0 to 2000 / **500** / 1 page/step]
004	Interrupt: Potential Control: FC	*ENG	[0 to 2000 / **200** / 1 page/step]

WWW.SERVICE-MANUAL.NET

3516	[Refresh Mode] **DFU**		
	While making prints with low coverage, the developer is agitated with less toner consumption and the toner carrier attraction tends to increase. This may cause low image density or poor transfer (white dots). To prevent this, the coagulated toner or overcharged toner has to be consumed by performing the refresh mode.		
001	Dev. Motor Rotation: Display: Bk	*ENG	[0 to 1000 / **0** / 0.1 m/step]
002	Dev. Motor Rotation: Display: M	*ENG	
003	Dev. Motor Rotation: Display: C	*ENG	
004	Dev. Motor Rotation: Display: Y	*ENG	
005	Rotation Threshold	*ENG	[0 to 1000 / **1** / 1 m/step]
006	Pixel Coverage Sum: Bk	*ENG	[0 to 65535 / **0** / 1 cm^2/step]
007	Pixel Coverage Sum: M	*ENG	
008	Pixel Coverage Sum: C	*ENG	
009	Pixel Coverage Sum: Y	*ENG	
010	Required Area: Bk	*ENG	[0 to 65535 / **0** / 1 cm^2/step]
011	Required Area: M	*ENG	
012	Required Area: C	*ENG	
013	Required Area: Y	*ENG	
014	Refresh Threshold: Bk	*ENG	[0 to 255 / **34** / 1 cm^2/m/step]
015	Refresh Threshold: M	*ENG	
016	Refresh Threshold: C	*ENG	
017	Refresh Threshold: Y	*ENG	
018	Pattern Generation Number: Bk	*ENG	[0 to 255 / **0** / 1 time/step]
019	Pattern Generation Number: M	*ENG	
020	Pattern Generation Number: C	*ENG	

WWW.SERVICE-MANUAL.NET

021	Pattern Generation Number: Y	*ENG	
022	Pattern Generation Number: Upper limit	*ENG	[0 to 255 / **0** / 1 time/step]
023	Toner Consumption Pattern Area	*ENG	[10 to 2550 / **300** / 10 cm^2/step]
024	Supply Coefficient	*ENG	[0 to 2.55 / **1** / 0.01/step]
025	Job End Area Coefficient	*ENG	[0.1 to 25.5 / **1** / 0.1/step]
026	Job End Vb Coefficient	*ENG	[0 to 100 / **40** / 1%/step]
027	Job End Length	*ENG	[0 to 56 / **12** / 1mm/step]
028	Job End Supply	*ENG	[0 to 1 / **0.45** / 0.001 mg/cm^2/step]

3517	[Blade damage prevention mode]		
	Adjusts the threshold temperature for preventing the cleaning blade in the transfer belt cleaning unit from being damaged. If the temperature is above this value, toner is applied to the transfer belt at set intervals during the job to prevent the blade from flipping over.		
001	Execution Temp. Threshold	*ENG	[0 to 50/ **40** / 1°C/step]

WWW.SERVICE-MANUAL.NET

3518	[Image Quality Adj. Execution Flag] **DFU**		
001	Toner End Recovery: Bk	*ENG	[0 or 1 / **0** / 1/step] 0: OFF. 1: ON
002	Toner End Recovery: M	*ENG	
003	Toner End Recovery: C	*ENG	
004	Toner End Recovery: Y	*ENG	
005	Vsg Adj.	*ENG	[0 or 1 / **0** / 1/step] 0: OFF. 1: ON
006	Developer Mixing	*ENG	[0 or 1 / **0** / 1/step] 0: OFF. 1: ON
007	Process Control	*ENG	[0 to 2 / **0** / 1/step] 0: OFF. 1: ON (once), 2: ON (twice)
008	MUSIC	*ENG	[0 to 2 / **0** / 1/step] 0: OFF. 1: ON (once), 2: ON (twice)
009	MUSIC (Skew Correction)	*ENG	[0 or 1 / **0** / 1/step] 0: OFF. 1: ON
010	Charge AC Control	*ENG	[0 or 1 / **0** / 1/step] 0: OFF. 1: ON
011	Blade Damage Prevention	*ENG	[0 or 1 / **0** / 1/step] 0: OFF. 1: ON
012	Vsgave Outside	*ENG	[0 or 1 / **0** / 1/step] 0: OFF. 1: ON

WWW.SERVICE-MANUAL.NET

3519	[Toner End Prohibition Setting]		
	Enables or disables each adjustment at toner near end.		
001	Process Control	*ENG	[0 or 1 / **1** / 1/step] 0: Permit (adjustment is done even toner near end condition) 1: Forbid (adjustment is not done at toner near end condition)
002	MUSIC	*ENG	
003	TC Adj.	*ENG	

3520	[ITB Idling Number]		
	Specifies the number of the ITB idling rotation for each condition.		
001	Temperature: H	*ENG	[0 or 3 / **0** / 1 revolution/step]
002	Temperature: M	*ENG	
003	Temperature: L	*ENG	
004	Temperature: L: Power ON	*ENG	

3521	[Temperature Threshold]		
	Specifies the threshold temperature for each condition. These settings affect the conditions of SP3-520. t1: Threshold between L (low temp.) and M (medium temp.) t2: Threshold between M (medium temp.) and H (high temps)		
001	Threshold: t2	*ENG	[20 or 30 / **25** / 1 deg/step]
002	Threshold: t1	*ENG	[0 or 15 / **15** / 1 deg/step]

WWW.SERVICE-MANUAL.NET

3522	[Initial Process Control Setting]		
	Adjusts the threshold for the process control at power on. When the current condition has changed by more than the values of these SPs when compared with the conditions at the previous operation, the process control at power on is executed.		
002	Non-use Time Setting	*ENG	[0 to 1440 / **360** / 1 minute/step]
003	Temperature Range	*ENG	[0 to 99 / **10** / 1°C/step]
004	Relative Humidity Range	*ENG	[0 to 99 / **50** / 1 %RH/step]
005	Absolute Humidity Range	*ENG	[0 to 99 / **6** / 1 g/m^3/step]
100	[Rapi_timer]		
	Time Setting	*ENG	[0 to 255 / **30** / 1 sec/step]
	Adjusts the time-out time for the Rapi timer.		

3531	[Non-use Time Process Control Setting]		
	Adjusts the threshold for the process control at stand-by. When the current condition has changed by more than the values of these SPs when compared with the conditions at the previous operation, the process control at stand-by is executed.		
001	Non-use Time Setting	*ENG	[0 to 1440 / **360** / 1 minute/step]
002	Temperature Range	*ENG	[0 to 99 / **10** / 1°C/step]
003	Relative Humidity Range	*ENG	[0 to 99 / **50** / 1 %RH/step]
004	Absolute Humidity Range	*ENG	[0 to 99 / **6** / 1 g/m^3/step]
005	Maximum Execution Number	*ENG	Adjusts the maximum execution time for the process control at stand-by. [0 to 99 / **10** / 1 time/step]

WWW.SERVICE-MANUAL.NET

3611	[Development Gamma: Display/Set]		
001	Bk (Current)	*ENG	Displays the current development gamma for each color. [0 to 5 / - / 0.01 mg/cm^2/kV /step]
002	M (Current)	*ENG	
003	C (Current)	*ENG	
004	Y (Current)	*ENG	
005	Bk (Target Display)	*ENG	Displays the target development gamma for each color. [0 to 5 / **0.91** / 0.01 mg/cm^2/kV /step]
006	M (Target Display)	*ENG	
007	C (Target Display)	*ENG	
008	Y (Target Display)	*ENG	
009	Bk (Standard Target Set)	*ENG	Displays the standard target development gamma for each color. [0 to 5 / **0.8** / 0.01 mg/cm^2/kV /step]
010	M (Standard Target Set)	*ENG	
011	C (Standard Target Set)	*ENG	
012	Y (Standard Target Set)	*ENG	
013	Environmental Correction	*ENG	Turns on or off the environmental correction for target development gamma. [0 or 1 / **1** / -] 0: Not Correct, 1: Correct
014	K (Max Correction)	*ENG	Adjusts the maximum correction value for each color. These SPs are effective only when the setting of SP3-611-013 is set to "1". [0 to 5 / **0.15** / 0.01 mg/cm^2/kv/ step]
015	M (Max Correction)	*ENG	
016	C (Max Correction)	*ENG	
017	Y (Max Correction)	*ENG	
018	K (Max Abs Hum)	*ENG	Adjusts the maximum humidity correction value for each color. These SPs are effective only when the setting of SP3-611-013 is set to "1". [1 to 99 / **20** / 1 g/m^3/step]
019	M (Max Abs Hum)	*ENG	

WWW.SERVICE-MANUAL.NET

020	C (Max Abs Hum)	*ENG	
021	Y (Max Abs Hum)	*ENG	

3612	[Vk Display]		
	Displays Vk for each color.		
001	Bk	*ENG	[-300 to 300 / - / 1 V/step]
002	M	*ENG	
003	C	*ENG	
004	Y	*ENG	

3621	[Development DC Control: Display] Plain: High speed, Thick 1: Middle speed, Thick 2 & FINE: Low speed		
	Displays the development DC bias adjusted with the process control for each line speed and color.		
001	Plain: Bk	*ENG	[0 to 700 / **550** / 1 -V/step]
002	Plain: M	*ENG	
003	Plain: C	*ENG	
004	Plain: Y	*ENG	
005	Thick 1: Bk	*ENG	[0 to 700 / **550** / 1 -V/step]
006	Thick 1: M	*ENG	
007	Thick 1: C	*ENG	
008	Thick 1: Y	*ENG	
009	Thick 2 & FINE: Bk	*ENG	[0 to 700 / **550** / 1 -V/step]
010	Thick 2 & FINE: M	*ENG	
011	Thick 2 & FINE: C	*ENG	
012	Thick 2 & FINE: Y	*ENG	

WWW.SERVICE-MANUAL.NET

3622	[Development DC Control] **DFU**		
	Adjusts the limit of VB.		
001	VB Limit	*ENG	[0 to 500 / **50** / 1 V/step]

3631	[Charge DC Control: Display] Plain: High speed, Thick 1: Middle speed, Thick 2 & FINE: Low speed		
	Displays the charge DC voltage adjusted with the process control for each line speed and color.		
001	Plain: Bk	*ENG	[0 to 2000 / **690** / 1 -V/step]
002	Plain: M	*ENG	
003	Plain: C	*ENG	
004	Plain: Y	*ENG	
005	Thick 1 & FINE: Bk	*ENG	[0 to 2000 / **690** / 1 -V/step]
006	Thick 1 & FINE: M	*ENG	
007	Thick 1 & FINE: C	*ENG	
008	Thick 1& FINE: Y	*ENG	
009	Thick 2 & FINE: Bk	*ENG	[0 to 2000 / **690** / 1 -V/step]
010	Thick 2 & FINE: M	*ENG	
011	Thick 2 & FINE: C	*ENG	
012	Thick 2 & FINE: Y	*ENG	

WWW.SERVICE-MANUAL.NET

3641	[Charge AC Control: Display] Plain: High speed		
	Displays the charge AC voltage adjusted with the process control for each color.		
001	Plain: Bk	*ENG	[0 to 3 / **1.75** / 0.01 kV/step]
002	Plain: M	*ENG	
003	Plain: C	*ENG	
004	Plain: Y	*ENG	

3651	[LD Power Control: Display] Plain: High speed, Thick 1: Middle speed, Thick 2 & FINE: Low speed		
	Displays the LD power adjusted for each environment.		
001	Plain: Bk	*ENG	[0 to 200 / **100** / 1 %/step]
002	Plain: M	*ENG	
003	Plain: C	*ENG	
004	Plain: Y	*ENG	
005	Thick 1: Bk	*ENG	[0 to 200 / **100** / 1 %/step]
006	Thick 1: M	*ENG	
007	Thick 1: C	*ENG	
008	Thick 1: Y	*ENG	
009	Thick 2 & FINE: Bk	*ENG	[0 to 200 / **100** / 1 %/step]
010	Thick 2 & FINE: M	*ENG	
011	Thick 2 & FINE: C	*ENG	
012	Thick 2 & FINE: Y	*ENG	

WWW.SERVICE-MANUAL.NET

3710	[HST Concentration Control: Set] TD Sensor: Toner Concentration Control Setting		
	Selects the toner concentration control method by HST memory, which is in the TD sensor.		
001	Control Method: Selection	*ENG	[0 or 1 / **1** / -] 0: Not Use, 1: Use

3711	[HST Concentration Control: Bk]		
	Displays the factory settings of the black PCDU.		
001	Vcnt	*ENG	[0 to 5 / **4** / 0.1 V/step]
002	Vt	*ENG	[0 to 5 / **2.5** / 0.1 V/step]
003	Sensitivity: HL	*ENG	[1.22 to 3.77 / **2.1** / 0.01 V/step]
004	Sensitivity: HM	*ENG	[0 to 2.55 / **1.05** / 0.01 V/step]
005	Sensitivity: ML	*ENG	
006	Set Detection	*ENG	[0 to 5 / **1** / 0.1 V/step]
007	Without Developer	*ENG	[0 to 5 / **1.2** / 0.1 V/step]
008	With Developer	*ENG	[0 to 5 / **1.3** / 0.1 V/step]
009	Serial Number 1	*ENG	[0 to 255 / **-** / 1 V/step]
010	Serial Number 2	*ENG	
011	Adjustment: Vt	*ENG	[0 to 5 / **3** / 0.1 V/step]
012	Adjustment: Vtref	*ENG	[0 to 5 / **3** / 0.1 V/step]
013	Adjustment: Vtcnt	*ENG	[0 to 5 / **4** / 0.01 V/step]
014	Adjustment: Gamma	*ENG	[0 to 2.55 / **0** / 0.01 mg/cm^2/kV /step]
015	Adjustment: Vcnt Result	*ENG	[0 to 9 / **9** / 1 /step]

WWW.SERVICE-MANUAL.NET

3712	[HST Concentration Control: M]		
	Displays the factory settings of the magenta PCDU.		
001	Vcnt	*ENG	[0 to 5 / **4** / 0.1 V/step]
002	Vt	*ENG	[0 to 5 / **2.5** / 0.1 V/step]
003	Sensitivity: HL	*ENG	[1.22 to 3.77 / **2.1** / 0.01 V/step]
004	Sensitivity: HM	*ENG	[0 to 2.55 / **1.05** / 0.01 V/step]
005	Sensitivity: ML	*ENG	
006	Set Detection	*ENG	[0 to 5 / **1** / 0.1 V/step]
007	Without Developer	*ENG	[0 to 5 / **1.2** / 0.1 V/step]
008	With Developer	*ENG	[0 to 5 / **1.3** / 0.1 V/step]
009	Serial Number 1	*ENG	[0 to 255 / **-** / 1 V/step]
010	Serial Number 2	*ENG	
011	Adjustment: Vt	*ENG	[0 to 5 / **3** / 0.1 V/step]
012	Adjustment: Vtref	*ENG	[0 to 5 / **3** / 0.1 V/step]
013	Adjustment: Vtcnt	*ENG	[0 to 5 / **4** / 0.01 V/step]
014	Adjustment: Gamma	*ENG	[0 to 2.55 / **0** / 0.01 mg/cm^2/kV /step]
015	Adjustment: Vcnt Result	*ENG	[0 to 9 / **9** / 1 /step]

WWW.SERVICE-MANUAL.NET

3713	[HST Concentration Control: C]		
	Displays the factory settings of the cyan PCDU.		
001	Vcnt	*ENG	[0 to 5 / **4** / 0.1 V/step]
002	Vt	*ENG	[0 to 5 / **2.5** / 0.1 V/step]
003	Sensitivity: HL	*ENG	[1.22 to 3.77 / **2.1** / 0.01 V/step]
004	Sensitivity: HM	*ENG	[0 to 2.55 / **1.05** / 0.01 V/step]
005	Sensitivity: ML	*ENG	
006	Set Detection	*ENG	[0 to 5 / **1** / 0.1 V/step]
007	Without Developer	*ENG	[0 to 5 / **1.2** / 0.1 V/step]
008	With Developer	*ENG	[0 to 5 / **1.3** / 0.1 V/step]
009	Serial Number 1	*ENG	[0 to 255 / **-** / 1 V/step]
010	Serial Number 2	*ENG	
011	Adjustment: Vt	*ENG	[0 to 5 / **3** / 0.1 V/step]
012	Adjustment: Vtref	*ENG	[0 to 5 / **3** / 0.1 V/step]
013	Adjustment: Vtcnt	*ENG	[0 to 5 / **4** / 0.01 V/step]
014	Adjustment: Gamma	*ENG	[0 to 2.55 / **0** / 0.01 mg/cm^2/kV /step]
015	Adjustment: Vcnt Result	*ENG	[0 to 9 / **9** / 1 /step]

WWW.SERVICE-MANUAL.NET

3714	[HST Concentration Control: Y]		
	Displays the factory settings of the yellow PCDU.		
001	Vcnt	*ENG	[0 to 5 / **4** / 0.1 V/step]
002	Vt	*ENG	[0 to 5 / **2.5** / 0.1 V/step]
003	Sensitivity: HL	*ENG	[1.22 to 3.77 / **2.1** / 0.01 V/step]
004	Sensitivity: HM	*ENG	[0 to 2.55 / **1.05** / 0.01 V/step]
005	Sensitivity: ML	*ENG	
006	Set Detection	*ENG	[0 to 5 / **1** / 0.1 V/step]
007	Without Developer	*ENG	[0 to 5 / **1.2** / 0.1 V/step]
008	With Developer	*ENG	[0 to 5 / **1.3** / 0.1 V/step]
009	Serial Number 1	*ENG	[0 to 255 / **-** / 1 V/step]
010	Serial Number 2	*ENG	
011	Adjustment: Vt	*ENG	[0 to 5 / **3** / 0.1 V/step]
012	Adjustment: Vtref	*ENG	[0 to 5 / **3** / 0.1 V/step]
013	Adjustment: Vtcnt	*ENG	[0 to 5 / **4** / 0.01 V/step]
014	Adjustment: Gamma	*ENG	[0 to 2.55 / **0** / 0.01 mg/cm^2/kV /step]
015	Adjustment: Vcnt Result	*ENG	[0 to 9 / **9** / 1 /step]

3800	[Waste Toner Full Detection]		
	Displays/ adjusts the toner collection bottle detection settings. These SPs are used for NRS.		
001	Condition	*CTL	[0 to 4 / **0** / 1 /step]
002	Detection Times	*CTL	[0 to 50 / **-** / 1 /step]
003	Print Page After Near Full	*CTL	[0 to 1000 / **0** / 1 sheet/step]
004	Pixel Count After Near	*CTL	[0 to 200000 / **-** / 1 cm^2/step]

WWW.SERVICE-MANUAL.NET

	Full		
005	Pixel Count After Replacement	*CTL	Displays the pixel counter after replacement of toner collection bottle. [0 to 200000 / **-** / 1 cm^2/step]
008	Coefficient	*ENG	[0.5 to 1.5 / **1** / 0.1 /step]
011	Notice Setting	*ENG	Enables or disables the calling for @Remote. [0 or 1 / **1** / -] 0: Enable @Remote calling 1: Disable @Remote calling
	NOTE: If the toner collection bottle has been replaced before the machine detects used toner near full when this setting is set to "0", the machine cannot detect toner collection bottle near full. In that case, set SP3-902-017 to "1".		
012	Day Threshold: Toner Collection bottle:NF	*ENG	[1 to 30 / **5** / 1 day/step]
	Sets the threshold days for the near-full display. The near-full of the toner collection bottle is displayed after the toner collection full sensor has detected the actuator in the toner collection bottle.		
013	Total:Toner Collection Bottle	*ENG	Displays the total amount of the used toner. [0 to 999999999 / **1** / 1]
014	Mechanism Full Detection Date	*ENG	Displays the date of the full detection fot the toner collection bottle.

3900	[Toner Collection Bottle Full Detection]		
	Turns toner collection bottle full detection on or off.		
001	ON/OFF Setting	*ENG	[0 or 1 / **1** / -] 0: OFF, 1: ON

WWW.SERVICE-MANUAL.NET

3901	[New PCU Detection]		
	Turns new PCDU detection on or off.		
001	ON/OFF Setting	*ENG	[0 or 1 / **1** / -] 0: OFF, 1: ON

3902	[Manual New Unit Set]		
	Turns the new unit detection flag for each PM unit on or off. The use of these counters is explained in the PM section and in the relevant parts of section 3 (Replacement and Adjustment).		
001	Development Unit: Bk	*ENG	[0 or 1 / **0** / -] 0: OFF, 1: ON
002	Development Unit: Y	*ENG	
003	Development Unit: C	*ENG	
004	Development Unit: M	*ENG	
005	Developer: Bk	*ENG	[0 or 1 / **0** / -] 0: OFF, 1: ON
006	Developer: Y	*ENG	
007	Developer: C	*ENG	
008	Developer: M	*ENG	
009	PCU (Drum Unit): Bk	*ENG	[0 or 1 / **0** / -] 0: OFF, 1: ON
010	PCU (Drum Unit): Y	*ENG	
011	PCU (Drum Unit): C	*ENG	
012	PCU (Drum Unit): M	*ENG	
013	Image Transfer Unit	*ENG	[0 or 1 / **0** / -] 0: OFF, 1: ON Do not use 3902-013 if you only change the cleaning unit. 3902-015: This is for the image transfer belt cleaning unit.
014	Fusing Unit	*ENG	
015	Cleaning Unit	*ENG	
016	Paper Transfer Unit	*ENG	
017	Toner Collection Bottle	*ENG	

WWW.SERVICE-MANUAL.NET

018	Fusing Roller (Heating Roller)	*ENG	[0 or 1 / **0** / -] 0: OFF, 1: ON "Fusing Roller" is designated as "Heating Roller" in this manual.
019	Pressure Roller	*ENG	

3903	Last Print Counter		
	Displays the rotation counter of the black development unit at five minutes interval.		
001	Counter 1	*ENG	[0 to 999999999 / - / 1 mm/step]
002	Counter 2	*ENG	
003	Counter 3	*ENG	
004	Counter 4	*ENG	
005	Counter 5	*ENG	
006	Counter 6	*ENG	
007	Counter 7	*ENG	
008	Counter 8	*ENG	
009	Counter 9	*ENG	
010	Counter 10	*ENG	
011-040	Counter 11 to 40	*ENG	
101	Last Fixed Date	*ENG	Displays the time of the latest stored counter.
102	Last PM Counter Save Destination	*ENG	Displays the counter number of the latest stored counter.

WWW.SERVICE-MANUAL.NET

3.4 SYSTEM SP4-XXX

3.4.1 SP4-XXX (SCANNER)

4008	[Sub Scan Magnification Adjustment]		
	Adjusts the sub-scan magnification by changing the scanner motor speed.		
001		*ENG	[-1.0 to 1.0 / **0** / 0.1%/step] **FA**

4010	[L-Edge Regist Adjustment]		
	Adjusts the leading edge registration by changing the scanning start timing in the sub-scan direction.		
001	-	*ENG	[-2.0 to 2.0 / **0** / 0.1 mm/step] **FA**

4011	[S-to-S Regist Adjustment]		
	Adjusts the side-to-side registration by changing the scanning start timing in the main scan direction.		
001	-	*ENG	[-2.5 to 2.5 / **0** / 0.1 mm/step] **FA**

4012	[Scanner Erase Margin: Scale] Scanner: Erase Margin: Scale		
	Sets the blank margin at each side for erasing the original shadow caused by the gap between the original and the scale.		
001	Book: Leading Edge	*ENG	[0 to 3.0 / **0** / 0.1 mm/step] **FA**
002	Book: Trailing Edge		
003	Book: Left		
004	Book: Right		
005	ADF: Leading Edge	*ENG	[0 to 3.0 / **0** / 0.1 mm/step] **FA**
007	ADF: Right		

WWW.SERVICE-MANUAL.NET

008	ADF: Left		

4013	[Scanner Free Run]		
	Performs the scanner free run with the exposure lamp on or off in the following mode. Full color mode / Full Size / A3 or DLT		
001	Lamp: OFF	*ENG	[0 or 1 / **0** / -] 0: OFF, 1: ON
002	Lamp: ON		

4014	[Scan]		
	Execute the scanner free fun with each mode.		
001	HP Detection Enable	-	Scanner free run with HP sensor check.
002	HP Detection Disable	-	Scanner free run without HP sensor check.

4020	[Dust Check]		
001	Detection: ON/OFF	*ENG	Turns the ADF scan glass dust check on/ off. [0 or 1 / **0** / 1 /step] 0: OFF, 1: ON
002	Detection: Level	*ENG	Selects the detect level. [0 to 8 / **4** / 1 /step] 0: lowest detection level 8: highest detection level
003	Correction Level	*ENG	Selects the level of the sub scan line correction when using the ARDF. [0 to 4 / **0** / 1 /step] 0: Off 1: Weakest 2: Weak 3: Strong 4: Strongest

WWW.SERVICE-MANUAL.NET

011	Dust Detect:On/Off:Rear	*ENG	Turns the ADF scan glass dust check on/off for the back side. [0 or 1 / **0** / 1 /step] 0: OFF, 1: ON
012	Dust Detect:Lvl:Rear	*ENG	Selects the detect level for the rear side. [0 to 8 / **4** / 1 /step] 0: lowest detection level 8: highest detection level

4301	[APS Operation Check]		
	Displays a code that represents the original size detected by the original sensors. (See "Input Check Table" in this section.)		
001	APS Operation Check	-	-

4303	[APS Min Size (A5/HLT/16K)]		
	Specifies the result of the detection when the outputs from the original sensors are all OFF.		
001	APS Min. Size (A5/HLT/16K)	*ENG	[0 to 2 / **0** / 1 /step] 0: No Original 1: A5-Lengthwise (16K SEF if 4305 is set to 3)

4305	[8K/16K Detection]	*ENG	[0 to 3 / **0** / 1 /step] 0: Normal Detection (the machine detects A4/LT size as A4 or LT, depending on the paper size setting) 1: A4-Sideways LT-Lengthwise 2: LT-Sideways A4-Lengthwise 3: 8K 16K
001	This program enables the machine to automatically recognize the 8K/16K size.		

WWW.SERVICE-MANUAL.NET

4308	[Scan Size Detection]		
001	Detection ON/OFF	*ENG	[0 or 1 / **1** / -] 0: OFF 1: ON
	Turns on or off the CCD original size detection. This detection is used only when an original is scanned in book scanning mode.		

4309	[Scan Size Detect:Setting]		
001	Original Density Thresh	*ENG	[0 to 255 / **32** / 1 digit/step]
	Specifies the threshold between an original area and non-original area for the scan original size detection in book scanning mode.		
002	Detection Time	*ENG	[20 to 100 / **60** / 20 msec/step]
	Specifies the detection time for the scan original size detection in book scanning mode.		
003	Lamp ON:Delay Time	*ENG	[0 to 200 / **40** / 20 msec/step]
	Specifies the lamp on timing for the scan original size detection in book scanning mode.		

WWW.SERVICE-MANUAL.NET

4310	[Scan Size Detect Value]		
	Displays the detected value by CCD. Each detection point for paper size and color is displayed on the LCD.		
001	S1:R	*ENG	[0 to 255 / - / 1 digit/step]
002	S1:G	*ENG	
003	S1:B	*ENG	
004	S2:R	*ENG	
005	S2:G	*ENG	
006	S2:B	*ENG	
007	S3:R	*ENG	
008	S3:G	*ENG	
009	S3:B	*ENG	

4400	[Scanner Erase Margin]	*ENG	
	Set the Mask for Original. These SPs set the area to be masked during platen (book) mode scanning.		
001	Book: Leading Edge	[0 to 3.0 / **0** / 0.1 mm/step]	
002	Book: Trailing Edge		
003	Book: Left		
004	Book: Right		
005	ADF: Leading Edge		
007	ADF: Right		
008	ADF: Left		

WWW.SERVICE-MANUAL.NET

4417	[IPU Test Pattern]		
	Selects the IPU test pattern.		
001	Test Pattern Selection	[0 to 24 / **0** / 1/step] 0: Scanned image 1: Gradation main scan A 2: Gradation main scan B 3: Gradation main scan C 4: Gradation main scan D 5: Gradation sub scan (1) 6: Grid pattern 7: Slant grid pattern 8: Gradation RGBCMYK 9: UCR pattern 10: Color patch 16 (1) 11: Color patch 16 (2) 12: Color patch 64	13: Grid pattern CMYK 14: Color patch CMYK 15: Gray pattern (1) 16: Gray pattern (2) 17: Gray Pattern (3) 18: Shading pattern 19: Thin line pattern 20: Scanned + Grid pattern 21: Scanned + Gray scale 22: Scanned + Color patch 23: Scanned + Slant Grid C 24: Scanned + Slant Grid D

4429	[Illegal Copy Output]		
001	Copy	*ENG	[0 to 3 / **3** / 1 /step]
002	Scanner		
003	Fax Operation		

4450	[Scan Image Path Selection]	
001	Black Subtraction ON/OFF	[0 or 1 / **1** / -] 0: OFF, 1: ON
	Uses or does not use the black reduction image path.	
002	SH ON/OFF	[0 or 1 / **0** / 1 /step] 0: ON, 1: OFF
	Uses or does not use the shading image path.	

WWW.SERVICE-MANUAL.NET

4460	[Digital AE Set] **DFU**		
	Specifies the level of deleting the background in the ADS mode. You can adjust its level for each scanning method (platen, ADF).		
001	Lower Limit	*ENG	[0 to 1023 / **364** / 4 digit/step]
002	Background Level	*ENG	[512 to 1532 / **932** / 1 digit/step]

4501	[ACC Target Density]		
	Selects the ACC result.		
001	Copy: K: Text	*ENG	[0 to 10 / **5** / 1 /step] 10: Darkest density
002	Copy: C: Text	*ENG	
003	Copy: M: Text	*ENG	
004	Copy: Y: Text	*ENG	
005	Copy: K: Photo	*ENG	
006	Copy: C: Photo	*ENG	
007	Copy: M: Photo	*ENG	
008	Copy: Y: Photo	*ENG	

4505	[ACC Cor:Bright]		
	Adjusts the offset correction for light areas of the ACC pattern.		
001	Text:K	*ENG	[-128 to 127 / **0** / 1 /step]
002	Text:C	*ENG	
003	Text:M	*ENG	
004	Text:Y	*ENG	
005	Photo:K	*ENG	[-128 to 127 / **0** / 1 /step]
006	Photo:C	*ENG	

WWW.SERVICE-MANUAL.NET

007	Photo:M	*ENG	
008	Photo:Y	*ENG	

4506	[ACC Cor:Dark]		
	Adjusts the offset correction for dark areas of the ACC pattern.		
001	Text:K	*ENG	[-128 to 127 / **0** / 1 /step]
002	Text:C	*ENG	
003	Text:M	*ENG	
004	Text:Y	*ENG	
005	Photo:K	*ENG	[-128 to 127 / **0** / 1 /step]
006	Photo:C	*ENG	
007	Photo:M	*ENG	
008	Photo:Y	*ENG	

4540	[Printer Correction]		
	This SP corrects the printer coverage of 12 hues (RY, YR, YG, etc. x 4 Colors [R, G, B, Option]) for a total of 48 parameters.		
001-004	RY Phase: Option/R/G/B	*ENG	Specifies the printer vector correction value. [0 to 255 / **0** / 1 /step]
005-008	YR Phase: Option/R/G/B		
009-012	YG Phase: Option/R/G/B		
013-016	GY Phase: Option/R/G/B		
017-020	GC Phase: Option/R/G/B		
021-024	CG Phase: Option/R/G/B		
025-028	CB Phase: Option/R/G/B		
029-032	BC Phase: Option/R/G/B		
033-036	BM Phase: Option/R/G/B		

WWW.SERVICE-MANUAL.NET

037-040	MB Phase: Option/R/G/B		
041-044	MR Phase: Option/R/G/B		
045-048	RM Phase: Option/R/G/B		

4550	[Scanner Application: text/Printing]		
4551	[Scanner Application: text]		
4552	[Scanner Application: text (Drop Out Coor)]		
4553	[Scanner Application: text-Photo]		
4554	[Scanner Application: Photo]		
4565	[Scanner Application: GrayScale]		
4570	[Scanner Application: Color: Text-Photo]		
4571	[Scanner Application: Color: Glossy Photo]		
4572	[Scanner Application: AutoColor]		
-005	MTF: 0 (Off), 1-15 (Strong)	*ENG	[0 to 15 / **8** / 1 /step] 0: MTF Off
	Sets the MTF level (Modulation Transfer Function) designed to improve image contrast. Set higher for stronger effect, lower for weaker effect.		
-006	Smoothing: 0 (x1), 1-7 (Strong)	*ENG	[0 to 7 / **4** / 1 /step]
	Use to remove "jaggies" if they appear. Set higher for smoother images.		
-007	Brightness: 1–255	*ENG	[1 to 255 / **128** / 1 /step]
	Set higher for darker, set lower for lighter.		

WWW.SERVICE-MANUAL.NET

-008	Contrast: 1–255	*ENG	[1 to 255 / **128** / 1 /step]
	Set higher for more contrast, set lower for less contrast.		
-009	Independent Dot Erase (0), 1-7 (Strong)	*ENG	[0 to 7 / **0** / 1 /step]
	Sets the erasure level of Irregular Dots. Set higher for stronger effect, lower for weaker effect. 0: Not activated		

4580	[FAX Application: Text/Chart]		
4582	[FAX Application: Text/Photo]		
4583	[FAX Application: Photo]		
-005	MTF: 0 (Off), 1-15 (Strong)	*ENG	[0 to 15 / **8** / 1 /step] 0: MTF Off
	Sets the MTF level (Modulation Transfer Function) designed to improve image contrast. Set higher for stronger effect, lower for weaker effect.		
-006	Smoothing: 0 (x1), 1-7 (Strong)	*ENG	[0 to 7 / **4** / 1 /step]
	Use to remove "jaggies" if they appear. Set higher for smoother images.		
-007	Brightness: 1–255	*ENG	[1 to 255 / **128** / 1 /step]
	Set higher for darker, set lower for lighter.		
-008	Contrast: 1–255	*ENG	[1 to 255 / **128** / 1 /step]
	Set higher for more contrast, set lower for less contrast.		

WWW.SERVICE-MANUAL.NET

-009	Independent Dot Erase (0), 1-7 (Strong)	*ENG	[0 to 7 / **0** / 1 /step]
	Selects the contrast level for B/W the Text mode. Sets the erasure level of Irregular Dots. Set higher for stronger effect, lower for weaker effect. 0: Not activated		
-010	Texture Erase: 0	*ENG	[0 to 2 / **0** / 1 /step]
	Sets the erasure level of textures. Set higher for stronger effect, lower for weaker effect. This SP (suffix "-010") only exists in SP4580, 4582 and 4583. 0: Not activated		

4581	[FAX Application: Text] **DFU**		
4584	[FAX Application: Original 1] **DFU**		
4585	[FAX Application: Original 2] **DFU**		
-005	MTF: 0 (Off), 1-15 (Strong)	*ENG	[0 to 15 / **8** / 1 /step] 0: MTF Off
	Sets the MTF level (Modulation Transfer Function) designed to improve image contrast. Set higher for stronger effect, lower for weaker effect.		
-006	Smoothing: 0 (x1), 1-7 (Strong)	*ENG	[0 to 7 / **4** / 1 /step]
	Use to remove "jaggies" if they appear. Set higher for smoother images.		
-007	Brightness: 1–255	*ENG	[1 to 255 / **128** / 1 /step]
	Set higher for darker, set lower for lighter.		
-008	Contrast: 1–255	*ENG	[1 to 255 / **128** / 1 /step]
	Set higher for more contrast, set lower for less contrast.		
-009	Independent Dot Erase (0), 1-7 (Strong)	*ENG	[0 to 7 / **0** / 1 /step]
	Selects the contrast level for B/W the Text mode. Sets the erasure level of Irregular Dots. Set higher for stronger effect, lower for weaker effect.		

WWW.SERVICE-MANUAL.NET

	0: Not activated

4600	[SBU Version Display]		
001	SBU_ID	-	Displays the ID of the SBU.
002	GASBU-N_ID	-	Displays the ID of the GASBU.
003	VSP5100_ID	-	Displays t he ID of the VSP5100.

4602	[Scanner Memory Access]		
001	Scanner Memory Access	-	Enables the read and write check for the SBU registers.

4603	[AGC Execution]		
001	HP Detection Enable	-	Executes the AGC.
002	HP Detection Disable	-	**DFU**

4604	[FGATE Open/Close] **DFU**		
001	-	-	Opens or closes the FGATE signal. This SP automatically returns to the default status (close) after exiting this SP. [0 or 1 / **0** / 1/step] 0: OFF, 1: ON

4609	[Gray Balance Set: R]		
001	Book Read	-	[-512 to 511 / **-46** / 1 digit/step]
002	DF Read	-	[-512 to 511 / **-46** / 1 digit/step]

WWW.SERVICE-MANUAL.NET

4610	[Gray Balance Set: G]		
001	Book Read	-	[-512 to 511 / **-20** / 1 digit/step]
002	DF Read		

4611	[Gray Balance Set: B]		
001	Book Read	-	[-512 to 511 / **-28** / 1 digit/step]
002	DF Read		

4623	[Black Level Adj. Display] RE: Red Even signal, RO: Red Odd signal		
001	Latest: RE Color	-	Displays the black offset value for the even red signal in the CCD circuit board (color printing speed). [0 to 16383 / **0** / 1 digit/step]
002	Latest: RO Color	-	Displays the black offset value for the odd red signal in the CCD circuit board (color printing speed). [0 to 16383 / **0** / 1 digit/step]

4624	[Black Level Adj. Display] GE: Green Even signal, GO: Green Odd signal		
001	Latest: GE Color	-	Displays the black offset value for the even green signal in the CCD circuit board (color printing speed). [0 to 16383 / **0** / 1 digit/step]
002	Latest: GO Color	-	Displays the black offset value for the odd green signal in the CCD circuit board (color printing speed). [0 to 16383 / **0** / 1 digit/step]

WWW.SERVICE-MANUAL.NET

4625	[Black Level Adj. Display] BE: Blue Even signal, BO: Blue Odd signal		
001	Latest: BE Color	-	Displays the black offset value for the even blue signal in the CCD circuit board (color printing speed). [0 to 16383 / **0** / 1 digit/step]
002	Latest: BO Color	-	Displays the black offset value for the odd blue signal in the CCD circuit board (color printing speed). [0 to 16383 / **0** / 1 digit/step]

4628	[Analog Gain Adjustment]		
	Displays the analog gain value of the amplifiers on the controller for Red.		
001	Latest: R Color	-	[0 to 7 / **0** / 1 digit/step]

4629	[Analog Gain Adjustment]		
	Displays the analog gain value of the amplifiers on the controller for Green.		
001	Latest: G Color	-	[0 to 7 / **0** / 1 digit/step]

4630	[Analog Gain Adjustment]		
	Displays the analog gain value of the amplifiers on the controller for Blue.		
001	Latest: B Color	-	[0 to 7 / **0** / 1 digit/step]

4631	[Digital Gain Adjustment]		
	Displays the gain value of the amplifiers on the controller for Red.		
001	Latest: RE Color	-	[0 to 1023 / **0** / 1 digit/step]
002	Latest: RO Color	-	

WWW.SERVICE-MANUAL.NET

4632	[Digital Gain Adjustment]		
	Displays the gain value of the amplifiers on the controller for Green.		
001	Latest: GE Color	-	[0 to 1023 / **0** / 1 digit/step]
002	Latest: GO Color	-	

4633	[Digital Gain Adjustment]		
	Displays the gain value of the amplifiers on the controller for Blue.		
001	Latest: BE Color	-	[0 to 1023 / **0** / 1 digit/step]
002	Latest: BO Color	-	

4635	[SSCG Correction Set] **DFU**		
	Switches SSCG noise cancellation on/off. 0: Off, 1: On		
001	Correction ON/OFF	*ENG	[0 or 1 / **1** / -]
002	Adj ON/OFF	*ENG	[0 or 1 / **1** / -]

4636	[SSCG Correction] **DFU**	
001	Execution	Executes the SSCG correction.
002	Error Flag	[0 to 2 / **0** / 1] 0: Normal end 1: End during update 2: Do not apply correction
003	Apply 80H	Executes the 80H setting copy.
004	Apply Correction Value	Not used

WWW.SERVICE-MANUAL.NET

4637	[SSCG Correction Value] **DFU**		
001	Latest Setting:RE	-	[0 to 255 / **128** / 1 digit/step]
002	Latest Setting:RO	-	
003	Latest Setting:GE	-	
004	Latest Setting:GO	-	
005	Latest Setting:BE	-	
006	Latest Setting:BO	-	

4638	[SSCG Correction Value] **DFU**		
001	Last Setting:RE	*ENG	[0 to 255 / **128** / 1 digit/step]
002	Last Setting:RO	*ENG	
003	Last Setting:GE	*ENG	
004	Last Setting:GO	*ENG	
005	Last Setting:BE	*ENG	
006	Last Setting:BO	*ENG	

4639	[SSCG Correction Value] **DFU**		
001	Factory Setting:RE	*ENG	[0 to 255 / **128** / 1 digit/step]
002	Factory Setting:RO	*ENG	
003	Factory Setting:GE	*ENG	
004	Factory Setting:GO	*ENG	
005	Factory Setting:BE	*ENG	
006	Factory Setting:BO	*ENG	

WWW.SERVICE-MANUAL.NET

4640	[SSCG Noise Amplitude] **DFU**	
001	Before Adj: RE	[0 to 1023 / **0** / 1 digit/step]
002	Before Adj: RO	
003	Before Adj: GE	
004	Before Adj: GO	
005	Before Adj: BE	
006	Before Adj: BO	
007	After Adj: RE	[0 to 1023 / **0** / 1 digit/step]
008	After Adj: RO	
009	After Adj: GE	
010	After Adj: GO	
011	After Adj: BE	
012	After Adj: BO	

4645	[Scan Adjust Error]		
001	White level	-	[0 to 65535 / **0** / 1 digit/step]
002	Black level	-	

4647	[Read Hard Error]		
	Displays the result of the SBU connection check.		
001	Power-ON	-	[0 to 35535 / **0** / 1digit /step] 0: OK, Other: SBU connection check failure If the SBU connection check fails, SC144 occurs.

WWW.SERVICE-MANUAL.NET

4654	[Black Level Adj. Display] RE: Red Even signal, RO: Red Odd signal		
001	Last Correct Value: RE Color	*ENG	Displays the black offset value for the even red signal in the CCD circuit board (color printing speed). [0 to 16383 / **0** / 1 digit/step]
002	Last Correct Value: RO Color	*ENG	Displays the black offset value for the odd red signal in the CCD circuit board (color printing speed). [0 to 16383 / **0** / 1 digit/step]

4655	[Black Level Adj. Display] GE: Green Even signal, GO: Green Odd signal		
001	Last Correct Value: GE Color	*ENG	Displays the black offset value for the even green signal in the CCD circuit board (color printing speed). [0 to 16383 / **0** / 1 digit/step]
002	Last Correct Value: GO Color	*ENG	Displays the black offset value for the odd green signal in the CCD circuit board (color printing speed). [0 to 16383 / **0** / 1 digit/step]

WWW.SERVICE-MANUAL.NET

4656	[Black Level Adj. Display] BE: Blue Even signal, BO: Blue Odd signal		
001	Last Correct Value: BE Color	*ENG	Displays the black offset value for the even blue signal in the CCD circuit board (color printing speed). [0 to 16383 / **0** / 1 digit/step]
002	Last Correct Value: BO Color	*ENG	Displays the black offset value for the odd blue signal in the CCD circuit board (color printing speed). [0 to 16383 / **0** / 1 digit/step]

4658	[Analog Gain Adjustment]		
	Displays the previous analog gain value of the amplifiers on the controller for Red.		
001	Last Correct Value: R Color	*ENG	[0 to 7 / **0** / 1 digit/step]

4659	[Analog Gain Adjustment]		
	Displays the previous analog gain value of the amplifiers on the controller for Green.		
001	Last Correct Value: G Color	*ENG	[0 to 7 / **0** / 1 digit/step]

4660	[Analog Gain Adjustment]		
	Displays the previous analog gain value of the amplifiers on the controller for Blue.		
001	Last Correct Value: B Color	*ENG	[0 to 7 / **0** / 1 digit/step]

WWW.SERVICE-MANUAL.NET

4661	[Digital Gain Adjustment] RE: Red Even signal, RO: Red Odd signal		
001	Last Correct Value: RE Color	*ENG	[0 to 1023 / **0** / 1 digit/step]
002	Last Correct Value: RO Color	*ENG	

4662	[Digital Gain Adjustment] GE: Green Even signal, GO: Green Odd signal		
001	Last Correct Value: GE Color	*ENG	[0 to 1023 / **0** / 1 digit/step]
002	Last Correct Value: GO Color	*ENG	

4663	[Digital Gain Adjustment] BE: Blue Even signal, BO: Blue Odd signal		
001	Last Correct Value: BE Color	*ENG	[0 to 1023 / **0** / 1 digit/step]
002	Last Correct Value: BO Color	*ENG	

4673	[Black Level Adj. Display] RE: Red Even signal, RO: Red Odd signal		
001	Factory Setting: RE Color	*ENG	Displays the factory setting values of the black level adjustment for the even red signal in the CCD circuit board (color printing speed).. [0 to 16383 / **0** / 1 digit/step]
002	Factory Setting: RO Color	*ENG	Displays the factory setting values of the black level adjustment for the odd red signal in the CCD circuit board (color printing speed). [0 to 16383 / **0** / 1 digit/step]

WWW.SERVICE-MANUAL.NET

4674	[Black Level Adj. Display] GE: Green Even signal, GO: Green Odd signal		
001	Factory Setting: GE Color	*ENG	Displays the factory setting values of the black level adjustment for the even green signal in the CCD circuit board (color printing speed). [0 to 16383 / **0** / 1 digit/step]
002	Factory Setting: GO Color	*ENG	Displays the factory setting values of the black level adjustment for the odd green signal in the CCD circuit board (color printing speed). [0 to 16383 / **0** / 1 digit/step]

4675	[Black Level Adj. Display] BE: Blue Even signal, BO: Blue Odd signal		
001	Factory Setting: BE Color	*ENG	Displays the factory setting values of the black level adjustment for the even blue signal in the CCD circuit board (color printing speed). [0 to 16383 / **0** / 1 digit/step]
002	Factory Setting: BO Color	*ENG	Displays the factory setting values of the black level adjustment for the odd blue signal in the CCD circuit board (color printing speed). [0 to 16383 / **0** / 1 digit/step]

WWW.SERVICE-MANUAL.NET

4677	[Analog Gain Adjustment]		
	Displays the factory setting values of the gain adjustment for Red.		
001	Factory Setting: RE Color	*ENG	[0 to 7 / **0** / 1 digit/step]

4678	[Analog Gain Adjustment]		
	Displays the factory setting values of the gain adjustment for Green.		
001	Factory Setting: GE Color	*ENG	[0 to 7 / **0** / 1 digit/step]

4679	[Analog Gain Adjustment]		
	Displays the factory setting values of the gain adjustment for Blue.		
001	Factory Setting: BE Color	*ENG	[0 to 7 / **0** / 1 digit/step]

4680	[Digital Gain Adjustment]		
	Displays the gain value of the amplifiers on the controller for Red.		
001	Factory Setting: RE Color	*ENG	[0 to 1023 / **0** / 1 digit/step]
002	Factory Setting: RO Color	*ENG	

4681	[Digital Gain Adjustment]		
	Displays the gain value of the amplifiers on the controller for Green.		
001	Factory Setting: GE Color	*ENG	[0 to 1023 / **0** / 1 digit/step]
002	Factory Setting: GO Color	*ENG	

WWW.SERVICE-MANUAL.NET

4682	[Digital Gain Adjustment]		
	Displays the gain value of the amplifiers on the controller for Blue.		
001	Factory Setting: BE Color	*ENG	[0 to 1023 / **0** / 1 digit/step]
002	Factory Setting: BO Color	*ENG	

4688	[Scan Image Density Adjustment]		
	Adjusts the white shading parameter when scanning an image with the ARDF or 1-pass DF. Adjusts the density level if the ID of outputs made in the DF and Platen mode is different.		
001	ARDF	*ENG	[50 to 150 / **98** / 1%/ step]
002	1-pass DF	*ENG	[50 to 150 / **98** / 1%/ step]

4690	[White Level Peak Read]		
	Displays the peak level of the white level scanning.		
001	RE	-	[0 to 1023 / **0** / 1 digit/step]
002	RO	-	

4691	[White Level Peak Read]		
	Displays the peak level of the white level scanning.		
001	GE	-	[0 to 1023 / **0** / 1 digit/step]
002	GO	-	

WWW.SERVICE-MANUAL.NET

4692	[White Level Peak Read]		
	Displays the peak level of the white level scanning.		
001	BE	-	[0 to 1023 / **0** / 1 digit/step]
002	BO	-	

4693	[Black Level Peak Read]		
	Displays the peak level of the black level scanning.		
001	RE	-	[0 to 1023 / **0** / 1 digit/step]
002	RO	-	

4694	[Black Level Peak Read]		
	Displays the peak level of the black level scanning.		
001	GE	-	[0 to 1023 / **0** / 1 digit/step]
002	GO	-	

4695	[Black Level Peak Read]		
	Displays the peak level of the black level scanning.		
001	BE	-	[0 to 1023 / **0** / 1 digit/step]
002	BO	-	

4700	[CIS ID Display]		
001	-	*ENG	Reads and displays the CIS hexadecimal ID.

WWW.SERVICE-MANUAL.NET

4709	[CIS GB Chart Level: R]		
001	-	*ENG	Displays the scanned level of Red at the gray balance adjustment for the CIS. [0 to 1023 / - / 1 digit/step]

4710	[CIS GB Chart Level: G]		
001	-	*ENG	Displays the scanned level of Green at the gray balance adjustment for the CIS. [0 to 1023 / - / 1 digit/step]

4711	[CIS GB Chart Level: B]		
001	-	*ENG	Displays the scanned level of Blue at the gray balance adjustment for the CIS. [0 to 1023 / - / 1 digit/step]

4712	[CIS GB Adj Value: R]		
001	-	*ENG	Displays and stores the scanned level of Red at the gray balance adjustment for the CIS. [-512 to 512 / - / 1 /step]

4713	[CIS GB Adj Value: G]		
001	-	*ENG	Displays and stores the scanned level of Green at the gray balance adjustment for the CIS. [-512 to 512 / - / 1 /step]

WWW.SERVICE-MANUAL.NET

4714	[CIS GB Adj Value: G]		
001	-	*ENG	Displays and stores the scanned level of Blue at the gray balance adjustment for the CIS. [-512 to 512 / - / 1 /step]

4745	[CIS Image Level Error Flag] **DFU**		
001	-	*ENG	

4746	[CIS GB Adj Error Flag] **DFU**		
001	-	*ENG	

4747	[CIS GB Adj Error Flag]		
001	-	*ENG	[0 to 7 / **0** / 1 /step] 0: Opal register read error flag 1: Marble register rear error flag 2: Marble boot error flag
	Reads and displays CIS hard errors.		

4748	[CIS M-Scan White Level: Avg. R]		
001	Leading Edge	*ENG	[0 to 255 / **0** / 1 digit/step]
	Reads and displays the average main-scan white lever of Red at leading edge of an original.		
002	Trailing Edge	*ENG	[0 to 255 / **0** / 1 digit/step]
	Reads and displays the average main-scan white lever of Red at trailing edge of an original.		

WWW.SERVICE-MANUAL.NET

4749	[CIS M-Scan White Level: Avg. G]		
001	Leading Edge	*ENG	[0 to 255 / **0** / 1 digit/step]
	Reads and displays the average main-scan white lever of Green at leading edge of an original.		
002	Trailing Edge	*ENG	[0 to 255 / **0** / 1 digit/step]
	Reads and displays the average main-scan white lever of Green at trailing edge of an original.		

4750	[CIS M-Scan White Level: Avg. B]		
001	Leading Edge	*ENG	[0 to 255 / **0** / 1 digit/step]
	Reads and displays the average main-scan white lever of Blue at leading edge of an original.		
002	Trailing Edge	*ENG	[0 to 255 / **0** / 1 digit/step]
	Reads and displays the average main-scan white lever of Blue at trailing edge of an original.		

4784	[CIS White Level Peak Range: R]		
001	Min	*ENG	[0 to 255 / **0** / 1 digit/step]
	Specifies the minimum value of the white level peak range for Red.		
002	Max	*ENG	[0 to 255 / **0** / 1 digit/step]
	Specifies the maximum value of the white level peak range for Red.		

4785	[CIS White Level Peak Range: G]		
001	Min	*ENG	[0 to 255 / **0** / 1 digit/step]
	Specifies the minimum value of the white level peak range for Green.		
002	Max	*ENG	[0 to 255 / **0** / 1 digit/step]
	Specifies the maximum value of the white level peak range for Green.		

WWW.SERVICE-MANUAL.NET

4786	[CIS White Level Peak Range: B]		
001	Min	*ENG	[0 to 255 / **0** / 1 digit/step]
	Specifies the minimum value of the white level peak range for Blue.		
002	Max	*ENG	[0 to 255 / **0** / 1 digit/step]
	Specifies the maximum value of the white level peak range for Blue.		

4787	[CIS White Level Peak Data: R]		
001	Factory Setting	*ENG	[0 to 255 / **0** / 1 digit/step]
	Displays and restores the factory setting for the white level peak of Red signal.		

4788	[CIS White Level Peak Data: G]		
001	Factory Setting	*ENG	[0 to 255 / **0** / 1 digit/step]
	Displays and restores the factory setting for the white level peak of Green signal.		

4789	[CIS White Level Peak Data: B]		
001	Factory Setting	*ENG	[0 to 255 / **0** / 1 digit/step]
	Displays and restores the factory setting for the white level peak of Blue signal.		

4790	[CIS White Level Peak Data: R]		
001	-	-	[0 to 255 / **0** / 1 digit/step]
	Displays the scanned white level peak of Red signal.		

WWW.SERVICE-MANUAL.NET

4791	[CIS White Level Peak Data: G]		
001	-	-	[0 to 255 / **0** / 1 digit/step]
	Displays the scanned white level peak of Green signal.		

4792	[CIS White Level Peak Data: B]		
001	-	-	[0 to 255 / **0** / 1 digit/step]
	Displays the scanned white level peak of Blue signal.		

4793	[CIS Black Level Data: R]		
001 -024	Chip1 to Chip24	-	[0 to 255 / **-** / 1 digit/step]
	Displays the scanned black level of Red signal for each chip.		

4794	[CIS Black Level Data: G]		
001 -024	Chip1 to Chip24	-	[0 to 255 / **-** / 1 digit/step]
	Displays the scanned black level of Green signal for each chip.		

4795	[CIS Black Level Data: B]		
001 -024	Chip1 to Chip24	-	[0 to 255 / **-** / 1 digit/step]
	Displays the scanned black level of Blue signal for each chip.		

WWW.SERVICE-MANUAL.NET

4796	[Low Density Color Correction]		
001	Front Side	*ENG	[0 or 1 / **0** / -] 0: Off, 1: On
	Turns on or off the low color density correction for the front side of originals.		
002	Rear Side	*ENG	[0 or 1 / **0** / -]
	Turns on or off the low color density correction for the back side of originals.		

4797	[Digital AE: Rear Side]		
001	Low Limit Value	*ENG	[0 to 1023 / **364** / 1/step]
	Specifies the low limit of the digital AE for the rear side of originals.		
002	Background level	*ENG	[512 to 1535 / **932** / 1/step]
	Specifies the background level of the digital AE for the rear side of originals.		

4798	[CIS LED Duty]		
001	-	-	[0 to 65535 / **0** / 1/step]
	Displays the CIS LED duty.		

4799	[CIS TEST Pattern]		
001	Select Pattern	-	[0 to 4 / **0** / 1/step]
	Selects the test patter for the CIS.		
002	Output Level Setting	-	[0 to 1023 / **0** / 1 digit/step]
	Specifies the fixed output level for the CIS.		

WWW.SERVICE-MANUAL.NET

4802	[DF Shading FreeRun]		
001	Lamp OFF	-	Executes the scanner free run of shading movement with exposure lamp on or off. Press "OFF" to stop this free run. Otherwise, the free run lasts.
002	Lamp ON		

4804	[Home Position]		
001	-	-	Executes the scanner HP detection.

4806	[Carriage Save]		
001	-	-	Moves the carriage from the scanner home position. Dust may fall through the DF exposure glass. Therefore, do this SP when you transport the machine a long distance.

4807	[SBU Test Pattern Change]		
001	-	-	[0 to 250 / **0** / 1 /step] 1: Grid pattern 2: Gradation main scan 3: Gradation sub scan 4 to 250: Default (Scanning Image)

4808	[Factory Setting Input]		
002	Execution Flag	-	[0 or 1 / **0** / 1 /step]

WWW.SERVICE-MANUAL.NET

4810	[Lamp Clock Selection] **DFU**		
001	-	-	[0 or 1 / **1** / 1 /step] 0: Brand T, 1: Brand U
	Selects the scanner lamp brand.		

4902	[ACC Data Display]		
	This SP outputs the final data read at the end of ACC execution. A zero is returned if there was an error reading the data. [0 to 255 / **0** / 1 /step]		
001	R DATA1	*ENG	Photo C Patch Level 1 (8-bit)
002	G DATA1	*ENG	Photo M Patch Level 1 (8-bit)
003	B DATA1	*ENG	Photo Y Patch Level 1 (8-bit)
004	R DATA2	*ENG	Photo C Patch Level 17 (8-bit)
005	G DATA2	*ENG	Photo M Patch Level 17(8-bit)
006	B DATA2	*ENG	Photo Y Patch Level 17 (8-bit)

4905	[Select Gradation Level] **DFU**		
	Changes the parameters for error diffusion.		
001	Dither Selection	*ENG	[0 to 255 / **0** / 1 /step]

WWW.SERVICE-MANUAL.NET

4918	[Manual Gamma Adj]		
	Adjusts the offset data of the printer gamma for yellow in Photo mode. See “Printer Gamma Correction" in the Replacement and Adjustment for how to use.		
009	-	-	Enter the manual gamma adjustment screen (-001 to 008). For details, see the "Printer Gamma Correction" in the section "Replace and Adjustment".

4954	[Read/Restore Std]		
001	Read New Chart	-	Execute the scanning of the A4 chart.
002	Recall Prev Chart	-	Clear the data of the scanned A4 chart.
004	Set Std Chart	-	Overwrite the standard data.

4958	[Read/Restore Std: Rear]		
001	Read New Chart	-	Execute the scanning of the A4 chart for the back side of originals
002	Recall Prev Chart	-	Clear the data of the scanned A4 chart for the back side of originals.
004	Set Std Chart	-	Overwrite the standard data for the back side of originals.

WWW.SERVICE-MANUAL.NET

4991	[IPU Image Path Selection]		
	Selects the image path. Enter the number to be selected using the 10-key pad.		
001	RGB Frame Memory	*ENG	[0 to 11 / **2** / 1 /step]
	0: Scanner input RGB images 1: Scanner I/F RGB images 2: RGB images done by Shading correction (Shading ON, Black offset ON) 3: Shading data 4 to 11: Not used		

4993	[High Light Correction]		
001	Sensitivity Selection	*ENG	Selects the Highlight correction level. [0 to 9 / **4** / 1 /step] 0: weakest sensitivity 9: strongest sensitivity
002	Range Selection	*ENG	Selects the range level of Highlight correction. [0 to 9 / **4** / 1 /step] 0: weakest skew correction, 9: strongest skew correction

4994	[Text/Photo Detection Level Adj.]		
	Selects the definition level between Text and Photo for high compression PDF.		
001	PDF Sensitivity Level text/photo	*ENG	[0 to 2 / **1** / 1 /step] 0: Text priority 1: Normal 2: Photo priority

WWW.SERVICE-MANUAL.NET

4996	[White Paper Detect Level]		
	Selects the threshold level of the original background density. Increasing this threshold level machine easily judge that an original is white.		
001	-	*ENG	[0 to 6 / **3** / 1 /step] 0: lightest 6: Darkest

WWW.SERVICE-MANUAL.NET

3.5 SYSTEM SP5-XXX

3.5.1 SP5-XXX (MODE)

5024	[mm/inch Display Selection]		
	Display units (mm or inch) for custom paper sizes.		
001	0:mm 1:inch	*CTL	0: mm (Europe/Asia) 1: inch (USA)

5045	[Accounting Counter]		
	Selects the counting method. **NOTE:** The counting method can be changed only once, regardless of whether the counter value is negative or positive.		
001	Counter Method	*CTL	[0 or 1 / **0** / -] 0: Developments 1: Prints

5047	[Paper Display]		
	Turns on or off the printed paper display on the LCD.		
001	-	*CTL	[0 or 1 / **0** / -] 0: OFF, 1: ON

5051	[TonerRefillDetectionDisplay]		
	Enables or disables the toner refill detection display.		
5051 1	Toner Refill Detection Display	*CTL	[0 or 1 / **0** / -] Alphanumeric 0: ON 1: OFF

WWW.SERVICE-MANUAL.NET

5055	[Display IP Address]		
	Display or does not display the IP address on the LCD.		
001	-	*CTL	[0 or 1 / **1** / -] 0: OFF 1: ON

5056	[Coverage Counter Display]		
	Display or does not display the coverage counter on the LCD.		
001	-	*CTL	[0 or 1 / **0** / -] 0: Not display, 1: Display

5061	[Toner Remaining Icon Display Change]		
	Display or does not display the remaining toner display icon on the LCD.		
001	-	*CTL	[0 or 1 / **0** / -] 0: Not display, 1: Display

5062	[Parts Replacement Alert Display]		
	Display or does not display the PM part yield on the LCD.		
001	Drum Unit: Bk	*CTL	[0 or 1 / **1** / -] 0: Not display, 1: Display
002	Drum Unit: M	*CTL	
003	Drum Unit: C	*CTL	
004	Drum Unit: Y	*CTL	
005	Development Unit: Bk	*CTL	[0 or 1 / **1** / -] 0: Not display, 1: Display
006	Development Unit: M	*CTL	
007	Development Unit: C	*CTL	
008	Development Unit: Y	*CTL	
009	Developer: Bk	*CTL	[0 or 1 / **1** / -]

WWW.SERVICE-MANUAL.NET

010	Developer: M	*CTL	0: Not display, 1: Display
011	Developer: C	*CTL	
012	Developer: Y	*CTL	
013	Image Transfer Belt	*CTL	[0 or 1 / **1** / -] 0: Not display, 1: Display
014	Image Transfer Cleaning Unit	*CTL	
015	Fusing Unit	*CTL	
016	Paper Transfer Roller Unit	*CTL	
017	Waster Toner Bottle	*CTL	
018	Fusing Roller (Heating Roller)	*CTL	
019	Pressure Roller	*CTL	

5066	[Parts PM Menu Display Setting] Display or does not display the “PM parts” button on the LCD.		
001	-	*CTL	[0 or 1 / **1** / -] 0: Not display, 1: Display

5067	[Parts PM System Setting]		
	Selects the service maintenance or user maintenance for each PM parts. If the user service is selected, PM alart is displayed on the LCD.		
001	PCU (Drum Unit):Bk	*CTL	**[0: Service]** or [1: User]
002	PCU (Drum Unit):M	*CTL	
003	PCU (Drum Unit):C	*CTL	
004	PCU (Drum Unit):Y	*CTL	
005	Dev Unit:Bk	*CTL	**[0: Service]** or [1: User]
006	Dev Unit:M	*CTL	

WWW.SERVICE-MANUAL.NET

007	Dev Unit:C	*CTL	
008	Dev Unit:Y	*CTL	
009	Developer:Bk	*CTL	**[0: Service]** or [1: User]
010	Developer:M	*CTL	
011	Developer:C	*CTL	
012	Developer:Y	*CTL	
013	Image Transfer Belt	*CTL	**[0: Service]** or [1: User]
014	Image Transfer Cleaning Unit	*CTL	**[0: Service]** or [1: User]
015	Fusing Unit	*CTL	**[0: Service]** or [1: User]
016	Paper Transfer Roller Unit	*CTL	**[0: Service]** or [1: User]
017	Waster Toner Bottle	*CTL	**[0: Service]** or [1: User]
018	Fusing Roller (Heating Roller)	*CTL	**[0: Service]** or [1: User]
019	Pressure Roller	*CTL	**[0: Service]** or [1: User]

5071	[Set Bypass Paper Size]		
001	-	*CTL	[0 or 1 / 0 / -] 0: Off, 1: On
	Turn on or off the paper size confirmation pop-up on the LED. This pop-up prevents mismatching between a paper size selected by the operation panel and an actual paper size on the by-pass tray.		

WWW.SERVICE-MANUAL.NET

5104*	A3/DLT Double Count **(SSP)**
	Specifies whether the counter is doubled for A3/DLT. “Yes” counts except from the bypass tray. When “Yes” is selected, A3 and DLT paper are counted twice, that is A4 x2 and LT x2 respectively.

5113	[Optional Counter Type]		
001	Default Optional Counter Type	*CTL	This program specifies the counter type. **0**: **None**, 1: Key card (RK 3, 4) 2: Key card (down), 3: Prepaid card 4: Coin rack, 5: MF key card 8: Key counter + Vendor 9: Bar-code Printer
002	External Optional Counter Type	*CTL	This program specifies the external counter type. **0**: **None** 1: Expansion Device 1 2: Expansion Device 2 3: Expansion Device 3

5114	[Optional Counter I/F]		
001	MF Key Card Extension	*CTL	[**0: Not installed/** 1: Installed (scanning accounting)]

5118	[Disable Copying]	*CTL	[**0**: Not disabled/ 1: Disabled]
001	This program disables copying.		

WWW.SERVICE-MANUAL.NET

5120	[Mode Clear Opt. Counter Removal]	*CTL	[**0**: **Yes (removed)**/ 1: Standby (installed but not used)/ 2: No (not removed)]
001	This program updates the information on the optional counter. When you install or remove an optional counter, check the settings.		

5121	[Counter Up Timing]	*CTL	[**0: Feed**/ 1: Exit]
001	This program specifies when the counter goes up. The settings refer to “paper feed” and “paper exit” respectively.		

5126	[F Size Original Setting]	*ENG	[0 to 2 / **0** / 1 /step] 0: 8 1/2" x 13" (Foolscap) 1: 8 1/4" x 13" (Folio) 2: 8" x 13" (F)
001	Selects F size original setting.		

5127	[APS Mode]	*CTL	[**0**: Not disabled/ 1: Disabled]
001	This program disables the APS.		

5128	[Code Mode With Key/Card Option]	*CTL	-
001	**DFU**		

5131	[Paper Size Type Selection]	*ENG	[0: JP (Japan)/ 1: NA / 2: EU]
001	The program selects a paper size system from the following alternatives: the AB system (0), the LT system (1), and the AF system (2).		

WWW.SERVICE-MANUAL.NET

5148	Size Detection Off	*CTL	[**0**: OFF/ 1: ON]
	0: Detecte 1: Not Detecte		

5150	[By-Pass Length Setting]	*CTL	[**0**: OFF/ 1: ON]
001	Determines whether the transfer sheet from the by-pass tray is used or not. Normally the paper length for sub scanning paper from the by-pass tray is limited to 600 mm, but this can be extended with this SP to 1260 mm.		

5162	[App. Switch Method]	*CTL	[**0**: Soft Key Set/ 1: Hard Key Set]
001	This program specifies the switch that selects an application program.		

5167	[Fax Printing Mode at Optional]		
	Enables or disables the automatic print out without an accounting device. This SP is used when the receiving fax is accounted by an external accounting device.		
001	Fax Printing Mode at Optional Counter Off	*CTL	[0 or 1 / **0** / -] 0: Automatic printing 1: No automatic printing

5169	[CE Login]		
	If you will change the printer bit switches, you must ‘log in’ to service mode with this SP before you go into the printer SP mode.		
001	CE Login	*CTL	[0 or 1 / **0** / -] 0: Disabled 1: Enabled

WWW.SERVICE-MANUAL.NET

5181	[Size Adjust]		
	Adjusts the paper size for each tray.		
001	TRAY 1	*ENG	[0 to 3 / **0 (EU/ASIA), 1 (NA)** / 1 /step] 0: A4 LEF, 1: LT LEF, 2: B5 LEF, 3: A5 LEF
002	TRAY 2: 1	*ENG	[0 or 1 / **0 (EU/ASIA), 1 (NA)** / -] 0: A4 LEF, 1: LT LEF
003	TRAY 2: 2	*ENG	[0 or 1 / **0 (EU/ASIA), 1 (NA)** / -] 0: A3, 1: DLT
004	TRAY 2: 3	*ENG	[0 or 1 / **0 (EU/ASIA), 1 (NA)** / -] 0: B4, 1: LG
005	TRAY 2: 4	*ENG	[0 or 1 / **0 (EU/ASIA), 1 (NA)** / -] 0: B5 LEF, 1: Exe LEF
006	TRAY 3/T-LCT: 1	*ENG	[0 or 1 / **0 (EU/ASIA), 1 (NA)** / -] 0: A4 LEF, 1: LT LEF
007	TRAY 3: 2	*ENG	[0 or 1 / **0 (EU/ASIA), 1 (NA)** / -] 0: A3, 1: DLT
008	TRAY 3: 3	*ENG	[0 or 1 / **0 (EU/ASIA), 1 (NA)** / -] 0: B4, 1: LG
009	TRAY 3: 4	*ENG	[0 or 1 / **0 (EU/ASIA), 1 (NA)** / -] 0: B5 LEF, 1: Exe LEF
010	TRAY 4: 1	*ENG	[0 or 1 / **0 (EU/ASIA), 1 (NA)** / -] 0: A4 LEF, 1: LT LEF
011	TRAY 4: 2	*ENG	[0 or 1 / **0 (EU/ASIA), 1 (NA)** / -] 0: A3, 1: DLT

WWW.SERVICE-MANUAL.NET

012	TRAY 4: 3	*ENG	[0 or 1 / **0 (EU/ASIA), 1 (NA)** / -] 0: B4, 1: LG
013	TRAY 4: 4	*ENG	[0 or 1 / **0 (EU/ASIA), 1 (NA)** / -] 0: B5 LEF, 1: Exe LEF
018	LCT	*ENG	[0 to 2 / **0 (EU/ASIA), 1 (NA)** / -] 0: A4LEF, 1: LTLEF, 2: B5LEF

5186	[RK 4]		
	Enables or disables the prevention for RK4 (accounting device) disconnection. If the RK4 is disconnected for 10 seconds when this SP is set to "1 (Enable)", the machine automatically jams a sheet of paper and stops.		
001	-	*ENG	[0 or 1 / **0** / 1/step] 0: Disable 1: Enable

5188	[Copy NvVersion]		
	Displays the version number of the NVRAM on the controller board.		
001	-	-	-

5191	[Mode Set] **DFU**		
001	-	*CTL	[0 or 1 / **1** / -] 0: Off, 1: On
	Enables or disables the STR (Suspend to RAM) mode.		

WWW.SERVICE-MANUAL.NET

5193	[External Controller Info. Settings]		
001	-	-	-
	Sets the external controller type. This setting is appropriately adjusted if an external controller is installed in the machine. [0 to 10 / **0** / 1/step] 0: No external controller installed 1: EFI controller 2: Ratio controller 3: Egret controller 4 to 10: Reserved		

5195	[Limitless SW] **DFU**		
001	-	*CTL	[0 or 1 / **0** / -] 0: Productivity priority 1: Tray priority
	Selects the paper feed mode. **Productivity priority:** This changes the feeding tray as soon as the machine detects the priority tray even the paper still remains in the feeding tray. **Tray priority**: This changes the feeding tray after the paper in the tray where the machine has been feeding paper has been run out of. This SP is activated only when a customer selects the "Auto Paper Selsct".		

5196	[Copier Vendor Mode] **JPN only**		
001	90 degree rotation	*CTL	-
002	Color and Tray Selection		0

WWW.SERVICE-MANUAL.NET

5199	[Paper Exit After Staple End.]		
001	-	*CTL	[0 or 1 / **0** / -] 0: OFF, 1: ON
	Enables or disables the paper feeding out from the finisher without stapling. ▪ If this setting is "1: ON", paper is fed out without stapling at the maximum number of the finisher stapling when the machine gets a multiple printing job (over maximum number). ▪ If this setting is "0: OFF", paper is fed out with stapling at the maximum number of the finisher stapling when the machine gets a multiple printing job (over maximum number).		

5212	[Page Numbering]	*CTL	
	This program adjusts the position of the second side page numbers. A "– value" moves the page number positions to the left edge. A "+ value" moves the page number positions to the right edge.		
003	Duplex Printout Right/Left Position	[–10 to 10 / **0** / 1 mm/step]	
004	Duplex Printout High/Low Position	[–10 to 10 / **0** / 1 mm/step]	

5302	[Set Time]		
	Adjusts the RTC (real time clock) time setting for the local time zone. Examples: For Japan (+9 GMT), enter 540 (9 hours x 60 min.) DOM: +540 (Tokyo) NA: -300 (New York) EU: + 60 (Paris) CH: +480 (Peking) TW: +480 (Taipei) AS: +480 (Hong Kong)		
002	Time Difference	*CTL #	[-1440 to 1440 / **Area** / 1 min./step]

WWW.SERVICE-MANUAL.NET

5307	[Summer Time]		
001	Setting		[0 to 1 / **NA, EU, ASIA** / 1 /step] 0: Disabled 1: Enabled NA and EUR: 1, ASIA: 0
	Enables or disables the summer time mode. Note ▪ Make sure that both SP5-307-3 and -4 are correctly set. Otherwise, this SP is not activated even if this SP is set to "1".		
003	Rule Set (Start)		
	Specifies the start setting for the summer time mode. There are 8 digits in this SP. For months 1 to 9, the "0" cannot be input in the first digit, so the eight-digit setting for -2 or -3 becomes a seven-digit setting. 1st and 2nd digits: The month. [1 to 12] 3rd digit: The week of the month. [1 to 5] 4th digit: The day of the week. [0 to 6 = Sunday to Saturday] 5th and 6th digits: The hour. [00 to 23] 7th digit: The length of the advanced time. [0 to 9 / 1 hour /step] 8th digit: The length of the advanced time. [0 to 5 / 10 minutes /step] ▪ The digits are counted from the left. ▪ Make sure that SP5-307-1 is set to "1".		
	For example: 3500010 (EU default) The timer is advanced by 1 hour at am 0:00 on the 5th Sunday in March		
004	Rule Set (End)	-	-
	Specifies the end setting for the summer time mode. There are 8 digits in this SP. 1st and 2nd digits: The month. [1 to 12] 3rd digit: The week of the month. [0 to 5] 4th digit: The day of the week. [0 to 7 = Sunday to Saturday] 5th and 6th digits: The hour. [00 to 23] The 7th and 8 digits must be set to "00". ▪ The digits are counted from the left. ▪ Make sure that SP5-307-1 is set to "1".		

WWW.SERVICE-MANUAL.NET

5401	[Access Control]		
	When installing the SDK application, SAS (VAS) adjusts the following settings. **DFU**		
103	Default Document ACL	*CTL	
	Whenever a new login user is added to the address book in external certification mode (for Windows, LDAP, RDH), the default document ACL is updated according to this SP setting. [0 to 3 / **0** / 1] 0: View 1: Edit 2: Edit/Delete 3: Full control **Note:** This SP setting is ignored on a machine that is not using document server.		
104	Authentication Time	*CTL	[0 to 255 / **0** / 1 sec./step] 0: 60 seconds 1 to 250 seconds
	Specifies the timeout of the authentication.		
162	Extend Certification Detail	*CTL	Bit 0: Log-out without an IC card **0: Not allowed (default)** 1: Allowed
	Selects the log out type for the extend authentication device.		
200	SDK1 UniqueID	*CTL	"SDK" is the "Software Development Kit". This data can be converted from SAS (VAS) when installed or uninstalled. **(DFU)**
201	SDK1 Certification Method	*CTL	
210	SDK2 UniqueID	*CTL	

WWW.SERVICE-MANUAL.NET

211	SDK2 Certification Method	*CTL	
220	SDK3 UniqueID	*CTL	
221	SDK3 Certification Method	*CTL	
230	SDK certification device	*CTL	
240	Detail Option	*CTL	-
	Enalbes or disables the log out confirmation option. ▪ Bit 0: Log out confirmation option **0: Enable (default)**, 1: Disable Selects the automatic log out time. ▪ Bit 1 and 2: Automatic log out timer reduction **00: 60 seconds (default)**, 01: 10 seconds, 10: 20 seconds, 11: 30 seconds		

5404	[User Code Count Clear]		
001	UCodeCtrClr		Clears all counters for users.

5411	[LDAP Certification]		
004	Easy Certification	*CTL	Determines whether easy LDAP certification is done. [0 or 1 / **1** / -] 1: On, 0: Off
005	Password Null Not Permit	*CTL	This SP is referenced only when SP5411-4 is set to "1" (On). [0 or 1 / **0** / -] 0: Password NULL not permitted. 1: Password NULL permitted.
006	Detail Option	*CTL	Determines whether LDAP option (anonymous certification) is turned on or off. Bit0

WWW.SERVICE-MANUAL.NET

			0: OFF, 1: ON

5413	[Lockout Setting]		
001	Lockout On/Off	*CTL	Switches on/off the lock on the local address book account. [0 or 1 / **0** / -] 0: Off, 1: On
002	Lockout Threshold	*CTL	Sets a limit on the frequency of lockouts for account lockouts. [1 to 10 / **5** / 1/step]
003	Cancellation On/Off	*CTL	Determines whether the system waits the prescribed time for input of a correct user ID and password after an account lockout has occurred. [0 or 1 / **0** / -] 0: Off (no wait time, lockout not cancelled) 1: On (system waits, cancels lockout if correct user ID and password are entered.
004	Cancellation Time	*CTL	Determines the length of time that the system waits for correct input of the user ID and password after a lockout has occurred. This setting is used only if SP5413-3 is set to "1" (on). [1 to 999 / **60** / 1 min./step]

WWW.SERVICE-MANUAL.NET

5414	[Access Mitigation]		
001	Mitigation On/Off	*CTL	Switches on/off masking of continuously used IDs and passwords that are identical. [0 or 1 / **0** / -] 0: Off, 1: On
002	Mitigation Time	*CTL	Sets the length of time for excluding continuous access for identical user IDs and passwords. [0 to 60 / **15** / 1 min./step]

5415	[Password Attack]		
001	Permissible Number	*CTL	Sets the number of attempts to attack the system with random passwords to gain illegal access to the system. [0 to 100 / **30** / 1 attempt/step]
002	Detect Time	*CTL	Sets the time limit to stop a password attack once such an attack has been detected. [1 to 10 / **5** / 1 sec./step]

5416	[Access Information]		
001	Access User Max Num	*CTL	Limits the number of users used by the access exclusion and password attack detection functions. [50 to 200 / **200** / 1 users/step]
002	Access Password Max Num	*CTL	Limits the number of passwords used by the access exclusion and password attack detection functions. [50 to 200 / **200** / 1 password/step]
003	Monitor Interval	*CTL	Sets the processing time interval for referencing user ID and password information.

WWW.SERVICE-MANUAL.NET

			[1 to 10 / **3** / 1 sec./step]

5417	[Access Attack]		
001	Access Permissible Number	*CTL	Sets a limit on access attempts when an excessive number of attempts are detected for MFP features. [0 to 500 / **100** / 1/step]
002	Attack Detect Time	*CTL	Sets the length of time for monitoring the frequency of access to MFP features. [10 to 30 / **10** / 1 sec./step]
003	Productivity Fall Wait	*CTL	Sets the wait time to slow down the speed of certification when an excessive number of access attempts have been detected. [0 to 9 / **3** / 1 sec./step]
004	Attack Max Num	*CTL	Sets a limit on the number of requests received for certification in order to slow down the certification speed when an excessive number of access attempts have been detected. [50 to 200 / **200** / 1 attempt/step]

WWW.SERVICE-MANUAL.NET

5420	[User Authentication]		
	These settings should be done with the System Administrator. **Note**: These functions are enabled only after the user access feature has been enabled.		
001	Copy	*CTL	Determines whether certification is required before a user can use the copy applications. [0 to 1 / **0** /1] 0: On, 1: Off
002	Color Security Setting	*CTL	-
	Enables or disables the color copy limitation for each copy mode when the user authentication is "ON". **0: Enable (default)**, 1: Disable Bit0: B/W mode Bit1: Mono color mode Bit2: Two colors mode Bit3: Full color mode Bit4: Automatic color mode Bit5 to 7: Reserved		
011	DocumentServer	*CTL	Determines whether certification is required before a user can use the document server. [0 or 1/ **0** /1] 0: On, 1: Off
021	Fax	*CTL	Determines whether certification is required before a user can use the fax application. [0 or 1/ **0** /1] 0: On, 1: Off
031	Scanner	*CTL	Determines whether certification is required before a user can use the scan applications. [0 or 1/ **0** /1] 0: On, 1: Off

WWW.SERVICE-MANUAL.NET

041	Printer	*CTL	Determines whether certification is required before a user can use the printer applications. [0 or 1/ **0** /1] 0: On, 1: Off
051	SDK1	*CTL	[0 or 1 / **0** / 1] 0: ON. 1: OFF Determines whether certification is required before a user can use the SDK application.
061	SDK2		
071	SDK3		

5430	[Auth Dialog Message Change]		
001	Message Change On/Off	*CTL	Turns on or off the displayed message change for the authentication. [0 or 1 / **0** / -] 0: Off, 1: On
002	Message Text Download	*CTL	Executes the message download for the authentication.
003	Message Text ID	*CTL	Inputs message text for the authentication.

WWW.SERVICE-MANUAL.NET

5431	[External Auth Preset]		
010	Tag	*CTL	[0 or 1 / **1** / -] 0: Not permit, 1: Permit
	Turns on or off the tag copy permission for the external authentication.		
011	Entry	*CTL	[0 or 1 / **1** / -] 0: Not permit, 1: Permit
	Turns on or off the copy permission of the entry information for the external authentication.		
012	Group	*CTL	[0 or 1 / **1** / -] 0: Not permit, 1: Permit
	Turns on or off the copy permission of the group information for the external authentication.		
020	Mail	*CTL	[0 or 1 / **1** / -] 0: Not permit, 1: Permit
	Turns on or off the copy permission of the mail information for the external authentication.		
030	Fax	*CTL	[0 or 1 / **1** / -] 0: Not permit, 1: Permit
	Turns on or off the copy permission of the fax information for the external authentication.		
031	FaxSub	*CTL	[0 or 1 / **1** / -] 0: Not permit, 1: Permit
	Turns on or off the copy permission of the fax additional information for the external authentication.		

WWW.SERVICE-MANUAL.NET

032	Folder	*CTL	[0 or 1 / **1** / -] 0: Not permit, 1: Permit
	Turns on or off the copy permission of the folder information for the external authentication.		
033	ProtectCode	*CTL	[0 or 1 / **1** / -] 0: Not permit, 1: Permit
	Turns on or off the copy permission of the protection code information for the external authentication.		
034	SmtpAuth	*CTL	[0 or 1 / **1** / -] 0: Not permit, 1: Permit
	Turns on or off the copy permission of the SMTP information for the external authentication.		
035	LdapAuth	*CTL	[0 or 1 / **1** / -] 0: Not permit, 1: Permit
	Turns on or off the copy permission of the LDAP information for the external authentication.		
036	Smb Ftp Auth	*CTL	[0 or 1 / **1** / -] 0: Not permit, 1: Permit
	Turns on or off the copy permission of the SMB/FTP information for the external authentication.		
037	AcntAcl	*CTL	[0 or 1 / **1** / -] 0: Not permit, 1: Permit
	Turns on or off the copy permission of the account ACL information for the external authentication.		

WWW.SERVICE-MANUAL.NET

038	DocumentAcl	*CTL	[0 or 1 / **1** / -] 0: Not permit, 1: Permit
	Turns on or off the copy permission of the document ACL information for the external authentication.		
040	CertCrypt		[0 or 1 / **1** / -] 0: Not permit, 1: Permit
	Turns on or off the copy permission of the authentication information for the external authentication.		
050	UserLimitCount	*CTL	[0 or 1 / **1** / -] 0: Not permit, 1: Permit
	Turns on or off the copy permission of the maximum number information for the external authentication.		

5481	[Authentication Error Code]		
	These SP codes determine how the authentication failures are displayed.		
001	System Log Disp	*CTL	Determines whether an error code appears in the system log after a user authentication failure occurs. [0 or 1/ **0** /1] 0: Off, 1: On
002	Panel Disp	*CTL	Determines whether an error code appears on the operation panel after a user authentication failure occurs. [0 or 1/ **1** /1] 1: On, 0: Off

WWW.SERVICE-MANUAL.NET

5490	[MF KeyCard (Japan only)]		
001	Job Permit Setting	*CTL	Sets up operation of the machine with a keycard. [0 to 1 / **0** / 1] 0: Disabled. Cancels operation without a user code. 1: Enabled. Allows operation without a user code.
002	Count Mode Setting	*CTL	-

5501	[PM Alarm]	*CTL	-
001	PM Alarm Level	[0 to 9999 / **0** / 1 /step] 0: Alarm off 1 to 9999: Alarm goes off when **Value (1 to 9999) x 1000 > PM counter**	
002	Original Count Alarm	[0 or 1 / **0** / –] 0: No alarm sounds 1: Alarm sounds after the number of originals passing through the ARDF > 10,000	

5504	[Jam Alarm]	*CTL	-
001	Sets the alarm to sound for the specified jam level (document misfeeds are not included). [0 to 3 / **3** / 1 /step] 0: Zero (Off) 1: Low (2.5K jams) 2: Medium (3K jams) 3: High (6K jams)		

WWW.SERVICE-MANUAL.NET

5505	[Error Alarm]		
	Sets the error alarm level. The error alarm counter counts "1" when any SC is detected. However, the error alarm counter decreases by "1" when an SC is not detected during a set number of copied sheets (for example, default 1500 sheets). The error alarm occurs when the SC error alarm counter reaches "5".		
001	-	*CTL	[0 to 255 / **C2.5c: 50, C2d: 60** / 100 copies /step]

5507	[Supply Alarm]	*CTL	-
001	Paper Supply Alarm	**0**: Off, 1: On, **DFU**	
002	Staple Supply Alarm	0: Off, **1: On**, **Japan only**	
003	Toner Supply Alarm	0: Off, **1: On**, **DFU**	
080	Toner Call Timing	Changes the timing of the “Toner Supply Call” via the NRS, when the following conditions occur. **0: At replacement (default)** 1: At near end	
128	Interval :Others	[250 to 10000 / **1000** / 1 /step] **DFU**	
132	Interval :A3		
133	Interval :A4		
134	Interval :A5		
141	Interval :B4		
142	Interval :B5		
160	Interval :DLT		
164	Interval :LG		
166	Interval :LT		
172	Interval :HLT		

WWW.SERVICE-MANUAL.NET

5508*	[CC Call]	*CTL	-
001*	Jam Remains	0: Disable, **1**: Enable	
	Enables/disables initiating a call for an unattended paper jam.		
002*	Continuous Jams	0: Disable, **1**: Enable	
	Enables/disables initiating a call for consecutive paper jams.		
003*	Continuous Door Open	0: Disable, **1**: Enable	
	Enables/disables initiating a call when the front door remains open.		
011*	Jam Detection: Time Length	[3 to 30 / **10** / 1 minute /step]	
	Sets the time a jam must remain before it becomes an “unattended paper jam”. This setting is enabled only when SP5508-004 is set to "1".		
012*	Jam Detection: Continuous Count	[2 to 10 / **5** / 1 /step]	
	Sets the number of consecutive paper jams required to initiate a call. This setting is enabled only when SP5508-004 is set to "1".		
013*	Door Open: Time Length	[3 to 30 / **10** / 1 /step]	
	Sets the length of time the door remains open before the machine initiates a call. This setting is enabled only when SP5-508-004 is set to "1".		

WWW.SERVICE-MANUAL.NET

5515	[SC/Alarm Setting]	*CTL	-
	With NRS (New Remote Service) in use, these SP codes can be set to issue an SC call when an SC error occurs. If this SP is switched off, the SC call is not issued when an SC error occurs.		
001	SC Call		[0 or 1 / **1** / -] 0: Off 1: On
002	Service Parts Near End Call		
003	Service Parts End Call		
004	User Call		
006	Communication Test Call		[0 or 1 / **1** / -] 0: Off 1: On
007	Machine Information Notice		
008	Alarm Notice		
009	Non Genuine Tonner Alarm		
010	Supply Automatic Ordering Call		
011	Supply Management Report Call		
012	Jam/Door Open Call		

5516	[Individual PM Part Alarm Call]	*CTL	-
	With @Remote in use, these SP codes can be set to issue an PM alarm call when one of SP parts reaches its yield.		
001	Disable/Enable Setting (0: Not send, 1: Send)		[0 or 1 / **1** / -] 0: Not send, 1: Send
004	Percent yield for triggering PM alert		[1 to 255 / **75** / 1 %/step]

WWW.SERVICE-MANUAL.NET

5610	[Base Gamma Control Point: Command]		
004	Get Factory Default	-	-
	Recalls the factory settings.		
005	Set Factory Default	-	-
	Overwrites the current values onto the factory settings.		
006	Restore Original Value	-	-
	Recalls the previous settings.		

5611	[Toner Color in 2C]		
001	B-C	*ENG	[0 to 128 / **100** / 1 /step] 128: Darkest density
	Adjusts the Cyan correction value of the blue signal in two-color mode.		
002	B-M	*ENG	[0 to 128 / **100** / 1 /step] 128: Darkest density
	Adjusts the Magenta correction value of the blue signal in two-color mode.		
003	G-C	*ENG	[0 to 128 / **100** / 1 /step] 128: Darkest density
	Adjusts the Cyan correction value of the blue signal in two-color mode.		
004	G-Y	*ENG	[0 to 128 / **100** / 1 /step] 128: Darkest density
	Adjusts the Yellow correction value of the blue signal in two-color mode.		

WWW.SERVICE-MANUAL.NET

005	R-M	*ENG	[0 to 128 / **100** / 1 /step] 128: Darkest density
	Adjusts the Magenta correction value of the blue signal in two-color mode.		
006	R-Y	*ENG	[0 to 128 / **100** / 1 /step] 128: Darkest density
	Adjusts the Yellow correction value of the blue signal in two-color mode.		

5618	[Color Mode Display Selection]		
001	-	*CTL	[0 or 1 / **1** / -] 0: ACS, Colour, Black & White, Two Colour, Single colour 1: ACD, Full Colour, Black & White
	Selects the color selection display on the LCD.		

Note

- Memory Clear (SP5-801)
- The following tables list the items that are cleared. The serial number information, meter charge setting and meter charge counters (SP8-581, 582, 583, 584, and 586) are not cleared.

5731	[Counter Effect] **JPN only**		
001	Change Mk1 Cnt (Paper->Combine)	*CTL	[0 or 1 / **0** / -] 0: Disabled, 1: Enabled

WWW.SERVICE-MANUAL.NET

5801	[Memory Clear]	
001	All Clear	Resets all correction data for process control and all software counters, and returns all modes and adjustments to their default values.
002	Engine	Clears the engine settings.
003	SCS	Initializes default system settings, SCS (System Control Service) settings, operation display coordinates, and ROM update information.
004	IMH Memory Clr	Initializes the IMH settings.
005	Mcs	Initializes the Mcs settings.
006	Copier Application	Initializes all copier application settings.
007	Fax Application	Initializes the fax reset time, job login ID, all TX/RX settings, local storage file numbers, and off-hook timer.
008	Printer Application	The following service settings: ▪ Bit switches ▪ Gamma settings (User & Service) ▪ Toner Limit The following user settings: ▪ Tray Priority ▪ Menu Protect ▪ System Setting except for setting of Energy Saver ▪ I/F Setup (I/O Buffer and I/O Timeout) ▪ PCL Menu
009	Scanner Application	Initializes the scanner defaults for the scanner and all the scanner SP modes.

WWW.SERVICE-MANUAL.NET

010	Web Service	Deletes the network file application management files and thumbnails, and initializes the job login ID.
011	NCS	All setting of Network Setup (User Menu) (NCS: Network Control Service)
012	R-Fax	Initializes the job login ID, SmartDeviceMonitor for Admin, job history, and local storage file numbers.
014	Clear DCS Setting	Initializes the DCS (Delivery Control Service) settings.
015	Clear UCS Setting	Initializes the UCS (User Information Control Service) settings.
016	MIRS Setting	Initializes the MIRS (Machine Information Report Service) settings.
017	CCS	Initializes the CCS (Certification and Charge-control Service) settings.
018	SRM Memory Clr	Initializes the SRM (System Resource Manager) settings.
019	LCS	Initializes the LCS settings.
020	Web Uapli	Initializes the web user application settings.
021	ECS	Initializes the ECS settings.

WWW.SERVICE-MANUAL.NET

5802	[FreeRun]		
	Performs a free run on the copier engine. Note ▪ The machine starts free run in the same condition as the sequence of A4/LT, A3 or A4 SEF printing from the 1st or 2nd tray. Therefore, the correct paper should be loaded in the 1st tray or 2nd tray, but paper is not fed. ▪ The main switch has to be turned off and on after using the free run mode for a test.		
001	B/W A4 LEF	-	-
002	FC A4 LEF	-	
003	FC A3 LEF	-	

5803	[Input Check]	-	See p.3-422 in this section.
5804	[Output Check]	-	See p.3-422 in this section.

5805	[Anti-Condensation Heater]		
002	0:OFF / 1:ON	*ENG	-

WWW.SERVICE-MANUAL.NET

5806	[RFID CONT.READING]		
001	TIMES	-	[0 to 65535 / - / 1 /step]
	Displays the counter for the RFID communication test.		
002	NOT 0	-	[0 to 65535 / - / 1 /step]
	Displays the counter for the RFID communication failure.		
003	RET.	-	[0 to 65535 / - / 1 /step]
	Displays the counter for the RFID communication retry.		
004	EXE.ALL	-	Execute the RFID communication test for all colors.
005	EXE.K	-	Execute the RFID communication test for balck.
006	EXE.M	-	Execute the RFID communication test for magenta.
007	EXE.C	-	Execute the RFID communication test for cyan.
008	EXE.Y	-	Execute the RFID communication test for yellow.

5810	[SC Reset]		
	Resets a type A service call condition. Note ▪ Turn the main switch off and on after resetting the SC code.		
001	Fusing SC Reset	-	-

WWW.SERVICE-MANUAL.NET

5811	[MachineSerial] Machine Serial Number Display		
002	Display		Displays the machine serial number.
004	BICU	Inputs	

5812	[Service Tel. No. Setting]		
001	Service	*CTL	-
	Sets the telephone number for a service representative. This number is printed on the Counter List, which can be printed with the user's "Counter" menu. This can be up to 20 characters (both numbers and alphabetic characters can be input).		
002	Facsimile	*CTL	-
	Sets the fax or telephone number for a service representative. This number is printed on the Counter List. This can be up to 20 characters (both numbers and alphabetic characters can be input).		
003	Supply	*CTL	-
	Use this to input the telephone number of your supplier for consumables. Enter the number and press #.		
004	Operation	*CTL	-
	Use this to input the telephone number of your sales agency. Enter the number and press #.		

WWW.SERVICE-MANUAL.NET

5816	[Remote Service]	*CTL	-
001	I/F Setting		
	Selects the remote service setting. [0 to 2 / **2** / 1 /step] 0: Remote service off 1: CSS remote service on 2: NRS remote service on		
002	CE Call		
	Performs the CE Call at the start or end of the service. [0 or 1 / **0** / 1 /step] 0: Start of the service 1: End of the service **NOTE:** This SP is activated only when SP 5816-001 is set to “2”.		
003	Function Flag		
	Enables or disables the remote service function. [0 to 1 / **0** / 1 /step] 0: Disabled 1: Enabled		
007	SSL Disable		
	Controls if RCG (Remote Communication Gate) confirmation is done by SSL during an RCG send for the @Remote over a network interface. [0 or 1 / **0** / 1 /step] 0: Yes. SSL not used. 1: No. SSL used.		

WWW.SERVICE-MANUAL.NET

008	RCG Connect Timeout	
	Sets the length of time (seconds) for the time-out when the RCG (Remote Communication Gate) connects during a call via the @Remote network. [1 to 90 / **30** / 1 second /step]	
009	RCG Write Timeout	
	Sets the length of time (seconds) for the time-out when sent data is written to the RCG during a call over the @Remote network. [1 to 100 / **60** / 1 second /step]	
010	RCG Read Timeout	
	Sets the length of time (seconds) for the timeout when sent data is written from the RCG during a call over the @Remote network. [1 to 100 / **60** / 1 second /step]	
011	Port 80 Enable	-
	Controls if permission is given to get access to the SOAP method over Port 80 on the @Remote network. [0 or 1 / **0** / –] 0: No. Access denied 1: Yes. Access granted.	
013	RFU Timing	
	Selects the timing for the remote firmware updating. [0 or 1 / **1** / –] 0: Any status of a target machine 1: Sleep or panel off mode only	

WWW.SERVICE-MANUAL.NET

021	RCG – C Registed	
	This SP displays the RCG-N installation end flag. 0: Installation not completed 1: Installation completed	
023	Connect Type (N/M)	
	This SP displays and selects the RCG-N connection method. [0 or 1 / **0** / 1 /step 0: Internet connection 1: Dial-up connection	
061	Cert. Expire Timing **DFU**	Proximity of the expiration of the certification.
062	Use Proxy	This SP setting determines if the proxy server is used when the machine communicates with the service center.
063	Proxy Host	
	This SP sets the address of the proxy server used for communication between the RCG device and the gateway. Use this SP to set up or display the customer proxy server address. The address is necessary to set up the embedded RCG-N. Note ▪ The address display is limited to 128 characters. Characters beyond the 128 character are ignored. ▪ This address is customer information and is not printed in the SMC report.	

WWW.SERVICE-MANUAL.NET

064	Proxy PortNumber
	This SP sets the port number of the proxy server used for communication between the embedded RCG-N and the gateway. This setting is necessary to set up the embedded RCG-N. Note ▪ This port number is customer information and is not printed in the SMC report.
065	Proxy User Name
	This SP sets the HTTP proxy certification user name. Note ▪ The length of the name is limited to 31 characters. Any character beyond the 31st character is ignored. ▪ This name is customer information and is not printed in the SMC report.
066	Proxy Password
	This SP sets the HTTP proxy certification password. Note ▪ The length of the password is limited to 31 characters. Any character beyond the 31st character is ignored. ▪ This name is customer information and is not printed in the SMC report.

WWW.SERVICE-MANUAL.NET

067	CERT:Up State	
	Displays the status of the certification update.	
	0	The certification used by RCG-N is set correctly.
	1	The certification request (setAuthKey) for update has been received from the GW URL and certification is presently being updated.
	2	The certification update is completed and the GW URL is being notified of the successful update.
	3	The certification update failed, and the GW URL is being notified of the failed update.
	4	The period of the certification has expired and new request for an update is being sent to the GW URL.
	11	A rescue update for certification has been issued and a rescue certification setting is in progress for the rescue GW connection.
	12	The rescue certification setting is completed and the GW URL is being notified of the certification update request.
	13	The notification of the request for certification update has completed successfully, and the system is waiting for the certification update request from the rescue GW URL.
	14	The notification of the certification request has been received from the rescue GW controller, and the certification is being stored.
	15	The certification has been stored, and the GW URL is being notified of the successful completion of this event.
	16	The storing of the certification has failed, and the GW URL is being notified of the failure of this event.

WWW.SERVICE-MANUAL.NET

	17	The certification update request has been received from the GW URL, the GW URL was notified of the results of the update after it was completed, but an certification error has been received, and the rescue certification is being recorded.
	18	The rescue certification of No. 17 has been recorded, and the GW URL is being notified of the failure of the certification update.
068	CERT:Error	
	Displays a number code that describes the reason for the request for update of the certification.	
	0	Normal. There is no request for certification update in progress.
	1	Request for certification update in progress. The current certification has expired.
	2	An SSL error notification has been issued. Issued after the certification has expired.
	3	Notification of shift from a common authentication to an individual certification.
	4	Notification of a common certification without ID2.
	5	Notification that no certification was issued.
	6	Notification that GW URL does not exist.
069	CERT:Up ID	The ID of the request for certification.
083	FirmUp Status	Displays the status of the firmware update.

WWW.SERVICE-MANUAL.NET

085	Firm Up User Check	This SP setting determines if the operator can confirm the previous version of the firmware before the firmware update execution. If the option to confirm the previous version is selected, a notification is sent to the system manager and the firmware update is done with the firmware files from the URL.
086	Firmware Size	Allows the service technician to confirm the size of the firmware data files during the firmware update execution.
087	CERT: Macro Version	Displays the macro version of the @Remote certification.
088	CERT: PAC Version	Displays the PAC version of the @Remote certification.
089	CERT: ID2 Code	Displays ID2 for the @Remote certification. Spaces are displayed as underscores (_). Asteriskes (****) indicate that no @Remote certification exists.
090	CERT: Subject	Displays the common name of the @Remote certification subject. CN = the following 17 bytes. Spaces are displayed as underscores (_). Asterisks (****) indicate that no DESS exists.
091	CERT: Serial Number	Displays serial number for the NRS certification. Asterisks (****) indicate that no DESS exists.
092	CERT: Issuer	Displays the common name of the issuer of the @Remote certification. CN = the following 30 bytes. Asteriskes (****)indicate that no DESS exists.
093	CERT: Valid Start	Displays the start time of the period for which the current @Remote certification is enabled.

WWW.SERVICE-MANUAL.NET

094	CERT: Valid End	Displays the end time of the period for which the current @Remote certification is enabled.
150	Selection Country	
	Select the country where embedded RCG-M is installed in the machine. After selecting the country, you must also set the following SP codes for embedded RCG-M: ▪ SP5816-153 ▪ SP5816-154 ▪ SP5816-161 0: Japan, 1: USA, 2: Canada, 3: UK, 4: Germany, 5: France, 6: Italy, 7: Netherlands, 8: Belgium, 9: Luxembourg, 10: Spain	
151	Line Type AutomaticJudgment	
	Press [Execute]. Setting this SP classifies the telephone line where embedded RCG-M is connected as either dial-up (pulse dial) or push (DTMF tone) type, so embedded RCG-M can automatically distinguish the number that connects to the outside line. ▪ The current progress, success, or failure of this execution can be displayed with SP5816-152. ▪ If the execution succeeded, SP5816-153 will display the result for confirmation and SP5816-154 will display the telephone number for the connection to the outside line.	

WWW.SERVICE-MANUAL.NET

152	Line Type Judgment Result
	Displays a number to show the result of the execution of SP5816 151. Here is a list of what the numbers mean. 0: Success 1: In progress (no result yet). Please wait. 2: Line abnormal 3: Cannot detect dial tone automatically 4: Line is disconnected 5: Insufficient electrical power supply 6: Line classification not supported 7: Error because fax transmission in progress – ioctl() occurred. 8: Other error occurred 9: Line classification still in progress. Please wait.
153	Selection Dial/Push
	This SP displays the classification (tone or pulse) of the telephone line to the access point for embedded RCG-M. The number displayed (0 or 1) is the result of the execution of SP5816-151. However, this setting can also be changed manually. [0 or 1 / **0** / 1 /step] 0: Tone Dialing Phone 1: Pulse Dialing Phone Inside Japan "2" may also be displayed: 0: Tone Dialing Phone 1: Pulse Dialing Phone 10PPS 2: Pulse Dialing Phone 20PPS

WWW.SERVICE-MANUAL.NET

154	Outside LineOutgoing Number
	The SP sets the number that switches to PSTN for the outside connection for embedded RCG-M in a system that employs a PBX (internal line). ▪ If the execution of SP5816-151 has succeeded and embedded RCG-M has connected to the **external** line, this SP display is completely blank. ▪ If embedded RCG-M has connected to an **internal** line, then the number of the connection to the external line is displayed. ▪ If embedded RCG-M has connected to an external line, a comma is displayed with the number. The comma is inserted for a 2 sec. pause. ▪ The number setting for the external line can be entered manually (including commas).
156	Dial Up User Name
	Use this SP to set a user name for access to remote dial up. Follow these rules when setting a user name: ▪ Name length: Up to 32 characters ▪ Spaces and # allowed but the entire entry must be enclosed by double quotation marks ('').
157	Dial Up Password
	Use this SP to set a password for access to remote dial up. Follow these rules when setting a user name: ▪ Name length: Up to 32 characters ▪ Spaces and # allowed but the entire entry must be enclosed by double quotation marks ('').
161	Local Phone Number
	Use this SP to set the telephone number of the line where embedded RCG-M is connected. This number is transmitted to and used by the Call Center to return calls. Limit: 24 numbers (numbers only)

WWW.SERVICE-MANUAL.NET

162	Connection Timing Adjustment: Incoming
	When the Call Center calls out to an embedded RCG-M modem, it sends a repeating ID tone (*#1#). This SP sets the time the line remains open to send these ID tones after the number of the embedded RCG-M modem is dialed up and connected. [0 to 24 / **1** / 1 /step] The actual amount of time is this setting x 2 sec. For example, if you set "2" the line will remain open for 4 sec.
163	Access Point
	This is the number of the dial-up access point for RCG-M. If no setting is done for this SP code, then a preset value (determined by the country selected) is used. Default: 0 Allowed: Up to 16 alphanumeric characters
164	Line Connecting
	This SP sets the connection conditions for the customer. This setting dedicates the line to RCG-M only, or sets the line for sharing between RCG-M and a fax unit. [0 to 1 / **0** / 1 /step] 0: Sharing Fax 1: No Sharing Fax Note ▪ If this setting is changed, the copier must be cycled off and on. ▪ SP5816 187 determines whether the off-hook button can be used to interrupt a RCG-M transmission in progress to open the line for fax transaction.

WWW.SERVICE-MANUAL.NET

173	Modem Serial Number	This SP displays the serial number registered for the RCG-M.	
174	Retransmission Limit		
	Normally, it is best to allow unlimited time for certification and ID2 update requests, and for the notification that the certification has been completed. However, RCG-M generates charges based on transmission time for the customer, so a limit is placed upon the time allowed for these transactions. If these transactions cannot be completed within the allowed time, do this SP to cancel the time restriction.		
187	FAX TX Priority	-	
	This SP determines whether pushing the off-hook button will interrupt a RCG-M transmission in progress to open the line for fax transaction. This SP can be used only if SP5816 164 is set to "0". [0 or 1/ **0** / -] 0: Disable, 1: Enable		
200	Manual Polling	-	Executes the manual polling.
201	Regist: Status		
	Displays a number that indicates the status of the @Remote service device. 0: Neither the registered device by the external nor embedded RCG device is set. 1: The embedded RCG device is being set. Only Box registration is completed. In this status, this unit cannot answer a polling request from the external RCG. 2. The embedded RCG device is set. In this status, the external RCG unit cannot answer a polling request. 3. The registered device by the external RCG is being set. In this status the embedded RCG device cannot be set. 4 The registered module by the external RCG has not started.		

WWW.SERVICE-MANUAL.NET

202	Letter Number	Allows entry of the number of the request needed for the RCG-N device.
203	Confirm Execute	Executes the inquiry request to the @Remote GW URL.
204	Confirm Result	
	Displays a number that indicates the result of the inquiry executed with SP5816 203. 0: Succeeded 1: Inquiry number error 2: Registration in progress 3: Proxy error (proxy enabled) 4: Proxy error (proxy disabled) 5: Proxy error (Illegal user name or password) 6: Communication error 7: Certification update error 8: Other error 9: Inquiry executing	
205	Confirm Place	
	Displays the result of the notification sent to the device from the GW URL in answer to the inquiry request. Displayed only when the result is registered at the GW URL.	
206	Register Execute	Executes "Embedded RCG Registration".

WWW.SERVICE-MANUAL.NET

207	Register Result		
	Displays a number that indicates the registration result. 0: Succeeded 2: Registration in progress 3: Proxy error (proxy enabled) 4: Proxy error (proxy disabled) 5: Proxy error (Illegal user name or password) 6: Communication error 7: Certification update error 8: Other error 9: Registration executing		
208	Error Code		
	Displays a number that describes the error code that was issued when either SP5816-204 or SP5816-207 was executed.		
	Cause	**Code**	**Meaning**
	Illegal Modem Parameter	-11001	Chat parameter error
		-11002	Chat execution error
		-11003	Unexpected error
	Operation Error, Incorrect Setting	-12002	Inquiry, registration attempted without acquiring device status.
		-12003	Attempted registration without execution of an inquiry and no previous registration.
		-12004	Attempted setting with illegal entries for certification and ID2.
		-12005	@Remote communication is prohibited. The device has an Embedded RC gate-related problem.

WWW.SERVICE-MANUAL.NET

	Operation Error, Incorrect Setting	-12006	A confirmation request was made after the confirmation had been already completed.
		-12007	The request number used at registration was different from the one used at confirmation.
		-12008	Update certification failed because mainframe was in use.
		-12009	ID2 mismatch between an individual certification and NVRAM
		-12010	Certification area is not initialized.
	Error Caused by Response from GW URL	-2385	Attempted dial up overseas without the correct international prefix for the telephone number.
		-2387	Not supported at the Service Center
		-2389	Database out of service
		-2390	Program out of service
		-2391	Two registrations for same device
		-2392	Parameter error
		-2393	Basil not managed
		-2394	Device not managed
		-2395	Box ID for Basil is illegal
		-2396	Device ID for Basil is illegal
		-2397	Incorrect ID2 format
		-2398	Incorrect request number format

WWW.SERVICE-MANUAL.NET

209	Instal Clear	Releases the machine from its embedded RCG setup.
250	CommLog Print	Prints the communication log.

5821	[Remote Service Address]		
002	RCG IP Address	*CTL	Sets the IP address of the RCG (Remote Communication Gate) destination for call processing at the remote service center.

5824	[NV-RAM Data Upload]		
	Uploads the UP and SP mode data (except for counters and the serial number) from the NVRAM to an SD card. For details, see the "NVRAM Data Upload/Download" in this section.		
001	NV-RAM Data Upload	#	-

5825	[NV-RAM Data Download]		
	Downloads the UP and SP mode data from an SD card to the NVRAM. For details, see the "NVRAM Data Upload/Download" in this section.		
001	NV-RAM Download	#	-

WWW.SERVICE-MANUAL.NET

5828	[Network Setting]	*CTL	-
050	1284 Compatibility (Centro)	Enables or disables 1284 Compatibility. [0 or 1 / **1** / 1 / step] 0: Disabled, 1: Enabled	
052	ECP (Centro)	Enables or disables ECP Compatibility. [0 or 1 / **1** / 1 / step] 0: Disabled, 1: Enabled Note ▪ This SP is activated only when SP5-828-50 is set to "1".	
065	Job Spooling	Enables/disables Job Spooling. [0 or 1 / **0** / 1 / step] 0: Disabled, 1: Enabled	
066	Job Spooling Clear: Start Time	Treatment of the job when a spooled job exists at power on. 0: ON (Data is cleared) **1**: OFF (Automatically printed)	
069	Job Spooling (Protocol)	Validates or invalidates the job spooling function for each protocol. **0**: Validates 1: Invalidates bit0: LPR bit1: FTP bit2: IPP bit3: SMB bit4: BMLinkS bit5: DIPRINT bit6: sftp bit7: (Reserved)	

WWW.SERVICE-MANUAL.NET

090	TELNET (0: OFF 1: ON)	Enables or disables the Telnet protocol. [0 or 1 / **1** / –] 0: Disable, 1: Enable
091	Web (0: OFF 1: ON)	Enables or disables the Web operation. [0 or 1 / **1** / –] 0: Disable, 1: Enable
145	Active IPv6 Link Local Address	This is the IPv6 local address link referenced on the Ethernet or wireless LAN (802.11b) in the format: "Link Local Address" + "Prefix Length" The IPv6 address consists of a total 128 bits configured in 8 blocks of 16 bits each.
147	Active IPv6 Stateless Address 1	These SPs are the IPv6 status addresses (1 to 5) referenced on the Ethernet or wireless LAN (802.11b) in the format: "Status Address" + "Prefix Length" The IPv6 address consists of a total 128 bits configured in 8 blocks of 16 bits each.
149	Active IPv6 Stateless Address 2	
151	Active IPv6 Stateless Address 3	
153	Active IPv6 Stateless Address 4	
155	Active IPv6 Stateless Address 5	
156	IPv6 Manual Address	This SP is the IPv6 manually set address referenced on the Ethernet or wireless LAN (802.11b) in the format: "Manual Set Address" + "Prefix Length" The IPv6 address consists of a total 128 bits configured in 8 blocks of 16 bits each.

WWW.SERVICE-MANUAL.NET

158	IPv6 Gateway Address	This SP is the IPv6 gateway address referenced on the Ethernet or wireless LAN (802.11b). The IPv6 address consists of a total 128 bits configured in 8 blocks of 16 bits each.
161	IPv6 Stateless Auto Setting	Enables or disables the automatic setting for IPv6 stateless. [0 or 1 / **1** / 1 /step] 0: Disable, 1: Enable
236	Web Item visible	Displays or does not display the Web system items. [0 x 0000 to 0 x ffff / **0 x ffff**] 0: Not displayed, 1: Displayed bit0: Net RICOH bit1: Consumable Supplier bit2-15: Reserved (all)
237	Web shopping link visible	Displays or does not display the link to Net RICOH on the top page and link page of the web system. [0 to 1 / **1** / 1] 0: Not display, 1:Display
238	Web supplies Link visible	Displays or does not display the link to Consumable Supplier on the top page and link page of the web system. [0 to 1 / **1** / 1] 0: Not display, 1:Display
239	Web Link1 Name	This SP confirms or changes the URL1 name on the link page of the web system. The maximum characters for the URL name are 31 characters.
240	Web Link1 URL	This SP confirms or changes the link to URL1 on the link page of the web system. The maximum characters for the URL are 127 characters.

WWW.SERVICE-MANUAL.NET

241	Web Link1 visible	Displays or does not display the link to URL1 on the top page of the web system. [0 to 1 / **1** / 1] 0: Not display, 1:Display
242	Web Link2 Name	Same as "-239"
243	Web Link2 URL	Same as "-240"
244	Web Link2 visible	Same as "-241"

5832	[HDD] HDD Initialization	*CTL	**-**
001	HDD Formatting (ALL)	Initializes the hard disk. Use this SP mode only if there is a hard disk error.	
002	HDD Formatting (IMH)		
003	HDD Formatting (Thumbnail)		
004	HDD Formatting (Job Log)		
005	HDD Formatting (Printer Fonts)		
006	HDD Formatting (User Info)		
007	Mail RX Data		
008	Mail TX Data		
009	HDD Formatting (Data for a Design)		
010	HDD Formatting (Log)		
011	HDD Formatting (Ridoc I/F)		

WWW.SERVICE-MANUAL.NET

5836	[Capture Settings]	*CTL	-
001	Capture Function (0:Off 1:On)		**0**: Disable, 1: Enable
	With this function disabled, the settings related to the capture feature cannot be initialized, displayed, or selected.		
002	Panel Setting		**0**: Displayed, 1: Not displayed
	Displays or does not display the capture function buttons.		
	5836-71 to 5836-78, Copier and Printer Document Reduction The following 6 SP modes set the default reduction for stored documents sent to the document management server via the MLB. Enabled only when optional MLB (Media Link Board) is installed.		
071	Reduction for Copy Color		0: 1to-1, 1: 1/2, **2: 1/3**, 3: 1/4
072	Reduction for Copy B&W Text		**0: 1to-1**, 1: 1/2, 2: 1/3, 3: 1/4, 6: 2/3
073	Reduction for Copy B&W Other		**0: 1to-1**, 1: 1/2, 2: 1/3, 3: 1/4, 6: 2/3
074	Reduction for Printer Color		0: 1to-1, 1: 1/2, **2: 1/3**, 3: 1/4
075	Reduction for Printer B&W		**0: 1to-1**, 1: 1/2, 2: 1/3, 3: 1/4, 6: 2/3
076	Reduction for Printer B&W HQ		**0: 1to-1**, 1: 1/2, 2: 1/3, 3: 1/4
077	Reduction for Printer Color 1200		1: 1/2, 3: 1/4, **4: 1/6**, 5: 1/8 (2: skipped) , 6: 2/3
078	Reduction for Printer B&W 1200		**1: 1/2**, 3: 1/4, 4: 1/6, 5: 1/8 (2: skipped) , 6: 2/3
	5836-81 to 5836-86, Stored document format The following 6 SP modes set Sets the default format for stored documents sent to the document management server via the MLB. Enabled only when optional MLB (Media Link Board) is installed.		

WWW.SERVICE-MANUAL.NET

081	Format for Copy Color	**0: JFIF/JPEG**, 1: TIFF/MMR, 2: TIFF/MH, 3: TIFF/MR Note ▪ This SP is not used in this model.
082	Format for Copy B&W Text	0: JFIF/JPEG, **1: TIFF/MMR**, 2: TIFF/MH, 3: TIFF/MR
083	Format Copy B&W Other	0: JFIF/JPEG, **1: TIFF/MMR**, 2: TIFF/MH, 3: TIFF/MR
084	Format for Printer Color	**0: JFIF/JPEG**, 1: TIFF/MMR, 2: TIFF/MH, 3: TIFF/MR Note ▪ This SP is not used in this model.
085	Format for Printer B&W	0: JFIF/JPEG, **1: TIFF/MMR**, 2: TIFF/MH, 3: TIFF/MR
086	Format for Printer B&W HQ	0: JFIF/JPEG, 1: TIFF/MMR, **2: TIFF/MH**, 3: TIFF/MR
091	Default for JPEG	[5 to 95 / **50** / 1 /step]
	Sets the JPEG format default for documents sent to the document management server via the MLB with JPEG selected as the format. Enabled only when optional MLB (Media Link Board) is installed.	
101	Primary srv IP address	Sets the IP address for the primary capture server. This is basically adjusted by the remote system.
102	Primary srv scheme	This is basically adjusted by the remote system.
103	Primary srv port number	This is basically adjusted by the remote system.

WWW.SERVICE-MANUAL.NET

104	Primary srv URL path	This is basically adjusted by the remote system.
111	Secondary srv IP address	Sets the IP address for the secondary capture server. This is basically adjusted by the remote system.
112	Secondary srv scheme	This is basically adjusted by the remote system.
113	Secondary srv port number	This is basically adjusted by the remote system.
114	Secondary srv URL path	This is basically adjusted by the remote system.
120	Default Reso Rate Switch	This is basically adjusted by the remote system.
121	Reso: Copy (Color)	[0 to 3 / **2** / 1/step]
	Selects the resolution for color copy mode. This is basically adjusted by the remote system. 0: 600dpi/ 1: 300dpi/ 2: 150dpi/ 3: 75dpi	
122	Reso: Copy (Mono)	[0 to 5 / **3** / 1/step]
	Selects the resolution for BW copy mode. This is basically adjusted by the remote system. 0: 600dpi/ 1: 400dpi/ 2: 300dpi/ 3: 200dpi/ 4: 150dpi/ 5: 100dpi	
123	Reso: Print (Color)	This is basically adjusted by the remote system. [0 to 3 / **2** / 1/step]
	Selects the resolution for color print mode. This is basically adjusted by the remote system. 0: 600dpi/ 1: 300dpi/ 2: 150dpi/ 3: 75dpi	

WWW.SERVICE-MANUAL.NET

124	Reso: Print (Mono)	This is basically adjusted by the remote system. [0 to 5 / **3** / 1/step]
	Selects the resolution for BW print mode. This is basically adjusted by the remote system. 0: 600dpi/ 1: 400dpi/ 2: 300dpi/ 3: 200dpi/ 4: 150dpi/ 5: 100dpi	
125	Reso: Fax (Color)	This is basically adjusted by the remote system. [0 to 6 / **4** / 1/step]
	Selects the resolution for color fax mode. This is basically adjusted by the remote system. 0: 600dpi/ 1: 400dpi/ 2: 300dpi/ 3: 200dpi/ 4: 150dpi/ 5: 100dpi/ 6: 75dpi	
126	Reso: Fax (Mono)	This is basically adjusted by the remote system. [0 to 6 / **3** / 1/step]
	Selects the resolution for BW fax mode. This is basically adjusted by the remote system. 0: 600dpi/ 1: 400dpi/ 2: 300dpi/ 3: 200dpi/ 4: 150dpi/ 5: 100dpi/ 6: 75dpi	
127	Reso: Scan (Color)	This is basically adjusted by the remote system. [0 to 6 / **4** / 1/step]
	Selects the resolution for color scanning mode. This is basically adjusted by the remote system. 0: 600dpi/ 1: 400dpi/ 2: 300dpi/ 3: 200dpi/ 4: 150dpi/ 5: 100dpi/ 6: 75dpi	
128	Reso: Scan (Mono)	This is basically adjusted by the remote system. [0 to 6 / **3** / 1/step]
	Selects the resolution for BW scanning mode. This is basically adjusted by the remote system. 0: 600dpi/ 1: 400dpi/ 2: 300dpi/ 3: 200dpi/ 4: 150dpi/ 5: 100dpi/ 6: 75dpi	

WWW.SERVICE-MANUAL.NET

141	All Addr Info Switch	[0 or 1 / **1** / -] 0: Off, 1: On
	Turns on or off the all address information transmission for the captured resources.	
142	Stand-by Doc Max Number	[10 to 10000 / **2000** / 1/step]
	Selects the maximum number of captured documents to be transmitted to the document server.	

5840	[IEEE 802.11]		
006	Channel Max	*CTL	[1 to 11 or 13 / **11 or 13** / 1 /step] Europe/Asia: 1 to 13 NA/ Asia: 1 to 11
	Sets the maximum number of channels available for data transmission via the wireless LAN. The number of channels available varies according to location. The default settings are set for the maximum end of the range for each area. Adjust the upper 4 bits to set the maximum number of channels. **DFU** Note ▪ Do not change the setting.		
007	Channel Min	*CTL	[1 to 11 or 13 / **1** / 1 /step] Europe: 1 to 13 NA/ Asia: 1 to 11
	Sets the minimum number of channels available for data transmission via the wireless LAN. The number of channels available varies according to location. The default settings are set for the minimum end of the range for each area. Adjust the lower 4 bits to set the minimum number of channels. **DFU** Note ▪ Do not change the setting.		
008	Transmission Speed	*CTL	0 x 00 to 0 x FF / **0 x FF to Auto** / -] **0 x FF to Auto** [Default] 0 x 11 - 55M Fix 0 x 10 - 48M Fix

WWW.SERVICE-MANUAL.NET

			0 x 0F - 36M Fix 0 x 0E - 18M Fix 0 x 0D - 12M Fix 0 x 0B - 9M Fix 0 x 0A - 6M Fix 0 x 07 - 11M Fix 0 x 05 - 5.5M Fix 0 x 08 - 1M Fix 0 x 13 - 0 x FE (reserved) 0 x 12 - 72M (reserved) 0 x 09 - 22M (reserved)
011	WEP key Select	*CTL	Selects the WEP key. [00 to 11 / **00** / 1 binary] 00: Key #1 01: Key #2 (Reserved) 10: Key #3 (Reserved) 11: Key #4 (Reserved)
042	Fragment Thresh	*CTL	Adjusts the fragment threshold for the IEEE802.11 card. [256 to 2346 / **2346** / 1] This SP is displayed only when the IEEE802.11 card is installed.
043	11g CTS to Self	*CTL	Determines whether the CTS self function is turned on or off. [0 to 1 / **1** / 1] 0: Off, 1: On This SP is displayed only when the IEEE802.11 card is installed.
044	11g Slot Time	*CTL	Selects the slot time for IEEE802.11. [0 to 1 / **0** / 1] 0: 20 μm, 1: 9 μm
045	WPA Debug Lvl	*CTL	Selects the debug level for WPA authentication application. [1 to 3 / **3** / 1] 1: Info, 2: warning, 3: error This SP is displayed only when the IEEE802.11 card is installed.

WWW.SERVICE-MANUAL.NET

5841	[Supply Name Setting]		
001	Toner Name Setting: Black	*CTL	Specifies supply names. These appear on the screen when the user presses the Inquiry button in the user tools screen.
002	Toner Name Setting: Cyan		
003	Toner Name Setting: Yellow		
004	Toner Name Setting: Magenta		
007	OrgStamp		
011	Staple Std1		
012	Staple Std2		
013	Staple Std3		
014	Staple Std4		
021	Staple Bind 1		
022	Staple Blind2		
023	Staple Blind 3		

5842	[GWWS Analysis] **DFU**		
001	Setting 1	*CTL	Default: **00000000** – do not change Netfiles: Jobs to be printed from the document server using a PC and the DeskTopBinder software
002	Setting 2	*CTL	Adjusts the debug program modesetting. Bit7: 5682 mmseg-log setting 0: Date/Hour/Minute/Second 1: Minute/Second/Msec. 0 to 6: Not used

WWW.SERVICE-MANUAL.NET

5844	[USB]		
001	Transfer Rate	*CTL	0x01: Full speed **0x04: Auto Change**
	Adjusts the USB transfer rate.		
002	Vendor ID	*CTL	Displays the vendor ID. **DFU**
003	Product ID	*CTL	Displays the product ID. **DFU**
004	Device Release Number	*CTL	Displays the development release version number. **DFU**
005	Fixed USB Port	*CTL	0: OFF, 1: Level1, 2: Level2
006	PnP Model Name	*CTL	Inputs the model name.
007	PnP Serial Number	*CTL	Inputs the serial number.
100	Notify Unsupport	*CTL	[0 or 1 / **1** / -] 0: Disable, 1: Enable
	Enables or disables the unsupported USB display.		

WWW.SERVICE-MANUAL.NET

5845	[Delivery Server Setting]	*CTL	-
	Provides items for delivery server settings.		
001	FTP Port No.	[0 to 65535 / **3670** / 1 /step]	
	Sets the FTP port number used when image files to the Scan Router Server.		
002	IP Address (Primary)	Range: **000.000.000.000** to 255.255.255.255	
	Use this SP to set the Scan Router Server address. The IP address under the transfer tab can be referenced by the initial system setting.		
006	Delivery Error Display Time	[0 to 999 / **300** / 1 second /step]	
	Use this setting to determine the length of time the prompt message is displayed when a test error occurs during document transfer with the NetFile application and an external device.		
008	IP Address (Secondary)	Range: **000.000.000.000** to 255.255.255.255	
	Specifies the IP address assigned to the computer designated to function as the secondary delivery server of Scan Router. This SP allows only the setting of the IP address without reference to the DNS setting.		
009	Delivery Server Model	[0 to 4/ **0** / 1 /step]	
	Allows changing the model of the delivery server registered by the I/O device. 0: Unknown 1: SG1 Provided 2: SG1 Package 3: SG2 Provided 4: SG2 Package		

WWW.SERVICE-MANUAL.NET

010	Delivery Svr. Capability	[0 to 255 / **0** / 1 /step]
	Changes the capability of the registered that the I/O device registered.	
	Bit7 = 1 Comment information exits	
	Bit6 = 1 Direct specification of mail address possible	
	Bit5 = 1 Mail RX confirmation setting possible	
	Bit4 = 1 Address book automatic update function exists	
	Bit3 = 1 Fax RX delivery function exists	
	Bit2 = 1 Sender password function exists	
	Bit1 = 1 Function to link MK-1 user and Sender exists	
	Bit0 = 1 Sender specification required (if set to 1, Bit6 is set to “0”)	
011	Delivery Svr Capability (Ext)	[0 to 255 / **0** / 1 /step]
	Changes the capability of the registered that the I/O device registered.	
	Bit7 = 1 Address book usage limitation (Limitation for each authorized user) Bit6 = 1 RDH authorization link Bit5 to 0: Not used	
013	Server Scheme (Primary) **DFU**	
	This is used for the scan router program.	
014	Server Port Number (Primary) **DFU**	
	This is used for the scan router program.	

WWW.SERVICE-MANUAL.NET

015	Server URL Path (Primary) **DFU**
	This is used for the scan router program.
016	Server Scheme (Secondary) **DFU**
	This is used for the scan router program.
017	Server Port Number (Secondary) **DFU**
	This is used for the scan router program.
018	Server URL Path (Secondary) **DFU**
	This is used for the scan router program.
022	Rapid Sending Control
	Enables or disables the prevention function for the continuous data sending error. [0 to 1 / **0** / -] 0: Disable, 1: Enable

5846	[UCS Settings]	*CTL	-
001	Machine ID (For Delivery Server)		Displays ID
	Displays the unique device ID in use by the delivery server directory. The value is only displayed and cannot be changed. This ID is created from the NIC MAC or IEEE 1394 EUI. The ID is displayed as either 6-byle or 8-byte binary.		
002	Machine ID Clear (For Delivery Server)		Clears ID
	Clears the unique ID of the device used as the name in the file transfer directory. Execute this SP if the connection of the device to the delivery server is unstable. After clearing the ID, the ID will be established again automatically by cycling the machine off and on.		
003	Maximum Entries	[2000 to 20000/ **2000** /1 /step]	
	Changes the maximum number of entries that UCS can handle. If a value smaller than the present value is set, the UCS managed data is		

WWW.SERVICE-MANUAL.NET

	cleared, and the data (excluding user code information) is displayed.	
006	Delivery Server Retry Timer	[0 to 255 / **0** / 1 /step]
	Sets the interval for retry attempts when the delivery server fails to acquire the delivery server address book.	
007	Delivery Server Retry Times	[0 to 255 / **0** / 1 /step]
	Sets the number of retry attempts when the delivery server fails to acquire the delivery server address book.	
008	Delivery Server Maximum Entries	[2000 to 50000 / **2000** / 1/step]
	Sets the maximum number account entries of the delivery server user information managed by UCS.	
010	LDAP Search Timeout	[1 to 255 / **60** / 1 /step]
	Sets the length of the timeout for the search of the LDAP server.	
020	WSD Maximum Entries	[5 to 250 / **250** / 1 /step]
	Sets the maximum entries for the address book of the WSD (WS-scanner).	
021	Folder Auth Change 0: Login User, 1: Destination	
022	Initial Value of Upper Limit Count 500	
040	Addr Book Migration (USB => HDD)	
	Not used in this machine.	

WWW.SERVICE-MANUAL.NET

041	Fill Addr Acl Info.	
	This SP must be executed immediately after installation of an HDD unit in a basic machine that previously had no HDD. The first time the machine is powered on with the new HDD installed, the system automatically takes the address book from the NVRAM and writes it onto the new HDD. However, the new address book on the HDD can be accessed only by the system administrator at this stage. Executing this SP by the service technician immediately after power on grants full address book access to all users. Procedure 1. Turn the machine off. 2. Install the new HDD. 3. Turn the machine on. 4. The address book and its initial data are created on the HDD automatically. 5. However, at this point the address book can be accessed by only the system administrator or key operator. 6. Enter the SP mode and do SP5846-041. After this SP executes successfully, any user can access the address book.	
043	Addr Book Media	Displays the slot number where an address book data is in. [0 to 30 / - /1] 0: Unconfirmed 1: SD Slot 1 2: SD Slot 2 4: USB Flash ROM 20: HDD 30: Nothing
047	Initialize Local Addr Book	Clears the local address book information, including the user code.
048	Initialize Delivery Addr Book	Clears the distribution address book information, except the user code.
049	Initialize LDAP Addr Book	Clears the LDAP address book information, except the user code.
050	Initialize All Addr Book	Clears all directory information managed by UCS, including all user codes.

WWW.SERVICE-MANUAL.NET

051	Backup All Addr Book	Uploads all directory information to the SD card.
052	Restore All Addr Book	Downloads all directory information from the SD card.
053	Clear Backup Info	Deletes the address book data from the SD card in the service slot. Deletes only the files that were uploaded from this machine. This feature does not work if the card is write-protected. Note ▪ After you do this SP, go out of the SP mode, and then turn the power off. ▪ Do not remove the SD card until the Power LED stops flashing.
060	Search option	
	This SP uses bit switches to set up the fuzzy search options for the UCS local address book. Bit: Meaning 0: Checks both upper/lower case characters 1: Japan Only 2: Japan Only 3: Japan Only 4 to 7: Not Used	
062	Complexity option 1	
	Use this SP to set the conditions for password entry to access the local address book. Specifically, this SP limits the password entry to **upper case** and sets the length of the password. [0 to 32 / **0** / 1 /step] Note ▪ This SP does not normally require adjustment. ▪ This SP is enabled only after the system administrator has set up a group password policy to control access to the address book.	
063	Complexity Option 2 **DFU**	

WWW.SERVICE-MANUAL.NET

064	Complexity Option 3 **DFU**	
065	Complexity Option 4 **DFU**	
091	FTP Auth Port Setting	Specifies the FTP port for getting a distribution server address book that is used in the identification mode. [0 to 65535 / **3671** / 1 /step]
094	Encryption Stat	Shows the status of the encryption function for the address book data.

5847	[Rep Resolution Reduction]	*CTL	-
	SP5847-1 through SP5847-8 changes the default settings of image data transferred externally by the Net File page reference function. [0 to 5 / **2** / 1 /step] SP5847-21 sets the default for JPEG image quality of image files handled by NetFile. “Net files” are jobs to be printed from the document server using a PC and the DeskTopBinder software.		
001	Rate for Copy Color		0: 1x 1: 1/2x **2: 1/3x** 3: 1/4x 4: 1/6x 5: 1/8x
002	Rate for Copy B&W Text		
003	Rate for Copy B&W Other		
004	Rate for Printer Color		
005	Rate for Printer B&W		
006	Rate for Printer Color 1200dpi		0: 1x 1: 1/2x 2: 1/3x 3: 1/4x **4: 1/6x** 5: 1/8x

WWW.SERVICE-MANUAL.NET

007	Rate for Printer B&W 1200dpi	0: 1x **1: 1/2x** 2: 1/3x 3: 1/4x 4: 1/6x 5: 1/8x
021	Network Quality Default for JPEG	
	Sets the default value for the quality of JPEG images sent as NetFile pages. This function is available only with the MLB (Media Link Board) option installed. [5 to 95 / **50** / 1 /step]	

5848	[Web Service]	*CTL	-
	5848 2 sets the 4-bit switch assignment for the access control setting. Setting of 0001 has no effect on access and delivery from Scan Router. 5848 100 sets the maximum size allowed for downloaded images. The default is equal to 1 gigabyte.		
002	Access Ctrl: Repository (only Lower 4 bits)	0000: No access control 0001: Denies access to DeskTop Binder. **0010**: No writing control	
003	Access Control: Doc. Svr. Print (Lower 4 bits)	Switches access control on and off. **0000**: No access control 0001: Denies access to DeskTop Binder.	
004	Access Control: User Directory (Lower 4 bits)		
007	Access Ctrl: Comm. Log Fax (Lower 4 bits)		
009	Access Ctrl: Job Ctrl (Lower 4 bits)		

WWW.SERVICE-MANUAL.NET

011	Access Ctrl: Device management	
021	Access Ctrl: Delivery (Lower 4 bits)	
022	Access Ctrl: uAdministration (Lower 4bits)	
99	Repository: Download Image Setting	**DFU**
100	Repository: Download Image Max. Size	Specifies the max size of the image data that the machine can download. [1 to 1024 / **1024** / 1 MB /step]
210	Setting: LogType: Job1	NIA
211	Setting: LogType: Job2	
212	Setting: LogType: Access	
213	Setting: Primary Srv	
214	Setting: Secondary Srv	
215	Setting: Start Time	
216	Setting: Interval Time	
217	Setting: Timing	

WWW.SERVICE-MANUAL.NET

5849	[Installation Date]	*CTL	-
5849 1	Display	The “Counter Clear Day” has been changed to “Installation Date” or “Inst. Date”.	
5849 2	Switch to Print	Determines whether the installation date is printed on the printout for the total counter. [0 or 1 / **1** / -] 0: OFF (No Print) 1: ON (Print)	
003	Total Counter	-	

5850	[Address Book Function]	*CTL	-
003	Replacement of Circuit Classification **Japan Only**		
	The machine is sold ready to use with a G3 line. This SP allows you to switch all at once to convert to G4 after you add a G4 line. Conversely, if for some reason the G4 line becomes unusable, you can easily switch back to G3.		

5851	[Bluetooth]
	Sets the operation mode for the Bluetooth Unit. Press either key. **[0:Public]** [1: Private]

5853	[Stamp Data Download]
	Use this SP to download the fixed stamp data stored in the firmware of the ROM and copy it to the HDD. This SP can be executed as many times as required. This SP must be executed after replacing or formatting the hard disks. Note ▪ This SP can be executed only with the hard disks installed.

WWW.SERVICE-MANUAL.NET

5856	[Remote ROM Update]		
	Allows the technician to upgrade the firmware using a local port (IEEE1284) when updating the remote ROM.		
002	Local Port	*CTL	[0 to 1 / **0** / 1/step] 0: Disable 1: Enable

5857	[Save Debug Log]	*CTL	-
001	On/Off (1:ON 0:OFF)	**0**: OFF, 1: ON	
	Switches the debug log feature on and off. The debug log cannot be captured until this feature is switched on.		
002	Target (2: HDD 3: SD)	**2**: HDD, 3: SD Card	
	Selects the storage device to save debug logs information when the conditions set with SP5-858 are satisfied. [2 to 3 / **2** / 1 /step]		
005	Save to HDD		
	Saves the debug log of the input SC number in memory to the HDD. A unique file name is generated to avoid overwriting existing file names on the SD Card. Up to 4MB can be copied to an SD Card. 4 MB segments can be copied one by one to each SD Card.		
006	Save to SD Card		
	Saves the debug log of the input SC number in memory to the SD card.		
009	Copy HDD to SD Card (Latest 4 MB)		
010	Copy HDD to SD Card (Latest 4 MB Any Key)		
011	Erase HDD Debug Data		
012	Erase SD Card Debug Data		

WWW.SERVICE-MANUAL.NET

013	Free Space on SD Card
014	Copy SD to SD (Latest 4 MB)
015	Copy SD to SD (Latest 4 MB Any Key)
016	Make HDD Debug
017	Make SD Debug

5858	[Debug Save When]	*CTL	-
	These SPs select the content of the debugging information to be saved to the destination selected by SP5857-002. SP5858-3 stores one SC specified by number. Refer to Section 4 for a list of SC error codes.		
001	Engine SC Error (0: OFF, 1: ON)	Turns on/off the debug save for SC codes generated by copier engine errors. [0 or 1 / **0** / 1/ step]	
002	Controller SC Error (0: OFF, 1: ON)	Turns on/off the debug save for SC codes generated by GW controller errors. [0 or 1 / **0** / 1/ step]	
003	Any SC Error	[0 to 65535 / **0** / 1 /step]	
004	Jam (0: OFF, 1: ON)	Turns on/off the debug save for jam errors.	

5859	[Debug Save Key No.]	*CTL	**-**
001	Key 1	These SPs allow you to set up to 10 keys for log files for functions that use common memory on the controller board. [–9999999 to 9999999 / **0** / –]	
002	Key 2		
003	Key 3		
004	Key 4		

WWW.SERVICE-MANUAL.NET

005	Key 5	
006	Key 6	
007	Key 7	
008	Key 8	
009	Key 9	
010	Key 10	

5860	[SMTP/POP3/IMAP4]	*CTL	**-**
020	Partial Mail Receive Timeout		[1 to 168 / **72** / 1 hour/step]
	Sets the amount of time to wait before saving a mail that breaks up during reception. The received mail is discarded if the remaining portion of the mail is not received during this prescribed time.		
021	MDN Response RFC2298 Compliance		[0 to 1 / **1** / –]
	Determines whether RFC2298 compliance is switched on for MDN reply mail. 0: No **1**: Yes		
022	SMTP Auth. From Field Replacement		[0 to 1 / **0** / –]
	Determines whether the FROM item of the mail header is switched to the validated account after the SMTP server is validated. **0**: No. “From” item not switched. 1: Yes. “From item switched.		

WWW.SERVICE-MANUAL.NET

025	SMTP Auth. Direct Setting		[0 or 1 / **0** / –]
	Selects the authentication method for SMPT. **Bit switch:** ▪ Bit 0: LOGIN ▪ Bit 1: PLAIN ▪ Bit 2: CRAM MD5 ▪ Bit 3: DIGEST MD5 ▪ Bit 4 to 7: Not used Note ▪ This SP is activated only when SMTP authorization is enabled by UP mode.		
026	S/MIME: MIME Header Setting	-	Selects the MIME header type of an E-mail sent by S/MIME. [0 to 2 / **0** / 1] 0: Microsoft Outlook Express standard 1: Internet Draft standard 2: RFC standard

5866	[E-mail Report] **Not Used**		
001	Report Validity	*CTL	Enables or disables the e-mail alert. [0 or 1 / **0** / –] 0: Enable, 1: Disable
005	Add Date Field	*CTL	Adds or does not add the date field to the header of the alert mail. [0 or 1 / **0** / –] 0: Not added, 1: Added

WWW.SERVICE-MANUAL.NET

5870	[Common Key Info Writing]		
001	Writing	*CTL	Writes to flash ROM the common proof for validating the device for @Remote specifications.
003	Initialize	*CTL	Initializes the data area of the common proof for validating.

5873	[SD Card Appli Move]	
001	Move Exec	This SP copies the application programs from the original SD card in SD card slot 2 to an SD card in SD card slot 1.
002	Undo Exec	This SP copies back the application programs from an SD card in SD Card Slot 2 to the original SD card in SD card slot 1. Use this menu when you have mistakenly copied some programs by using "Move Exec" (SP5873-1).

5875	[SC Auto Reboot]		
001	Reboot Setting	*CTL	Enables or disables the automatic reboot function when an SC error occurs. [0 or 1/ **0** / –] 0: The machine reboots automatically when the machine issues an SC error and logs the SC error code. If the same SC occurs again, the machine does not reboot. 1: The machine does not reboot when an SC error occurs. The reboot is not executed for Type A or C SC codes.
002	Reboot Type	*CTL	Selects the reboot method for SC. [0 or 1 / **0** / -] 0: Manual reboot, 1: Automatic reboot

WWW.SERVICE-MANUAL.NET

5878	[Option Setup]		
001	Data Overwrite Security	-	Enables the Data Overwrite Security unit. Press "EXECUTE" on the operation panel. Then turn the machine off and on.
002	HDD Encryption	-	Installs the HDD Encryption unit.

5881	[Fixed Phrase Block Erasing]		
001	-	-	Deletes the fixed phrase.

5883	[Line Speed Selection]		
	Selects the line speed for middle thick paper.		
001	Middle Thick	*ENG	[0 or 1 / **1** / 1 /step] 0: MID CARD: Half Speed (115 mm/sec) 1: MID CARD: Normal Speed (C2c: 154, C2d: 205 mm/sec)

5885	[Set WIM Function] Web Image Monitor Settings		
	Close or disclose the functions of web image monitor.		
020	Document Server ACC Ctrl	*CTL	0: OFF, 1: ON Bit Meaning 0: Forbid all document server access (1) 1: Forbid user mode access (1) 2: Forbid print function (1) 3: Forbid fax TX (1) 4: Forbid scan sending (1) 5: Forbid downloading (1) 6: Forbid delete (1) 7: Reserved

WWW.SERVICE-MANUAL.NET

050	Document Server List Def. Lines	*CTL	Selects the display type for the document box list. [0 to 2 / **0** / 1] 0: Thumbnail, 1: Icon, 2: Details
051	DocSvr Trans	*CTL	Sets the number of documents to be displayed in the document box list. [5 to 20 / **10** / 1]
100	Signature Setting	*CTL	Selects whether the signature is added to the scanned documents with the WIM when they are transmitted by an e-mail. [0 to 2 / **0** / 1/step] 0: Setting for each e-mail 1: Signature for all 2: No signature
101	Encryption Setting	*CTL	Determines whether the scanned documents with the WIM are encrypted when they are transmitted by an e-mail. [0 to 1 / **0** / 1] 0: Not encrypted, 1:Encryption
200	Memory Leak Detect Stting	*CTL	Not Used
201	DocSrv Session Time Out Setting	*CTL	Not Used

WWW.SERVICE-MANUAL.NET

5887	[SD Get Counter]		
	This SP determines whether the ROM can be updated.		
001	-	*CTL	This SP sends a text file to an SD card inserted in SD card Slot 2 (lower slot). The operation stores. The file is stored in a folder created in the root directory of the SD card called SD_COUNTER. The file is saved as a text file (*.txt) prefixed with the number of the machine. 1. Insert the SD card in SD card Slot 2 (lower slot). 2. Select SP5887 then touch [EXECUTE]. Touch [Execute] in the message when you are prompted.

5888	[Personal Information Protect]		
001	-	*CTL	Selects the protection level for logs. [0 to 1 / **0** / 1} 0: No authentication, No protection for logs 1: No authentication, Protected logs (only an administrator can see the logs)

WWW.SERVICE-MANUAL.NET

5893	[SDK Application Counter]	*CTL	-
	Displays the counter name of each SDK application.		
001	SDK-1		
002	SDK-2		
003	SDK-3		
004	SDK-4		
005	SDK-5		
006	SDK-6		

5894	[Test Name1]		
	-		
001	Test Name1_1	*ENG	[0 to 2 / **0** / 1/step]

5895	[Application Invalidation]		
	Enables or disables the printer or scanner application. These SPs are used only when an external controller is installed in the machine.		
001	Printer	*CTL	[0 or 1 / **0** / -] 0: Enable 1: Disable
002	Scanner	*CTL	

5907	[Plug & Play Maker/Model Name]
	Selects the brand name and the production name for Windows Plug & Play. This information is stored in the NVRAM. If the NVRAM is defective, these names should be registered again. After selecting, press the "Original Type" key and "#" key at the same time. When the setting is completed, the beeper sounds five times.

WWW.SERVICE-MANUAL.NET

5913	[Switchover Permission Time]		
002	Print Application Timer	*CTL	[3 to 30 / **3** / 1 second /step]
	Sets the amount of time to elapse while the machine is in standby mode (and the operation panel keys have not been used) before another application can gain control of the display.		

5967	[Copy Server Set Function]	*CTL	**0**: ON, 1: OFF
	Enables and disables the document server. This is a security measure that prevents image data from being left in the temporary area of the HDD. After changing this setting, you must switch the main switch off and on to enable the new setting.		

5974	[Cherry Server]		
	Specifies which version of ScanRouter, “Lite” or “Full”, is installed.		
001	Cherry Server	*CTL	[0 or 1 / **0** / –] 0: Lite, 1: Full

5985	[Device Setting]	
	The NIC and USB support features are built into the GW controller. Use this SP to enable and disable these features. In order to use the NIC and USB functions built into the controller board, these SP codes must be set to "1".	
001	On Board NIC	[0 to 2 / **0** / 1 /step] 0: Disable, 1: Enable, 2: Function limitation When the "Function limitation" is set, "On board NIC" is limited only for the NRS or LDAP/NT authentication. Note ▪ Other network applications than NRS or LDAP/NT authentication are not available when this SP is set to "2". Even though you can change the initial settings of those network applications, the settings do not work.

WWW.SERVICE-MANUAL.NET

002	On Board USB	[0 or 1 / **0** / 1/step] 0: Disable, 1: Enable

5987	[Mech. Counter]	
001	0: OFF / 1: ON	This SP detects that a mechanical counter device is removed. If it is detected, SC610 occurs.

5990	[SP print mode]		
	Prints out the SMC sheets.		
001	All (Data List)	-	-
002	SP (Mode Data List)	-	
003	User Program	-	
004	Logging Data	-	
005	Diagnostic Report	-	
006	Non-Default	-	
007	NIB Summary	-	
008	Capture Log	-	
021	Copier User Program	-	
022	Scanner SP	-	
023	Scanner User Program	-	
024	SDK/J Summary	-	-
025	SDK/J Application Info	-	

WWW.SERVICE-MANUAL.NET

5998	[Fusing Cont mode] Fusing Control Mode		
	Turns the silent fusing warm-up mode on or off.		
001	fast/silent	*ENG	[0 or 1 / **1** / -] 0: Silent (less noise) 1: Fast (less time)
	Turns on or off the fusing unit preceding mode. The machine turns on the fusing unit first by default after power-on or recovery from the energy save mode. If a customer does not want the fusing unit to rotate before sending a job to the machine, change this setting to "0". In this case, the first print time or recovery time may be little bit longer than before.		

WWW.SERVICE-MANUAL.NET

3.6 SYSTEM SP6-XXX

3.6.1 SP6-XXX (PERIPHERALS)

6006	[ADF Adjustment]		
001-003	Adjusts the side-to-side and leading registration of originals with the ARDF.		
001	Side-to-Side Registration: Front	*ENG	[-3.0 to 3.0 / **0** / 0.1 mm/step]
002	Side-to-Side Registration: Rear		
003	Leading Edge Registration	*ENG	[-5.0 to 5.0 / **0** / 0.1 mm/step]
005-006	Adjusts the amount of paper buckle to correct original skew for the front and rear sides.		
005	Buckle: Duplex Front	*ENG	[-3.0 to 3.0 / **0** / 0.1 mm/step]
006	Buckle: Duplex Rear		[-2.5 to 2.5 / **0** / 0.1 mm/step]
007	Rear Edge Erase	*ENG	[-10 to 10 / **0** / 0.1 mm/step]
	Adjusts the erase margin at the original trailing edge.		
010-015	SPs from -010 to -015 are only used for the models with the single pass DF.		
010	L-Edge Regist (1-Pass): Front	*ENG	[-5.0 to 5.0 / **0** / 0.1 mm/step]
	Adjusts the leading registration of the original front side with the single pass DF.		
011	L-Edge Regist (1-Pass): Rear	*ENG	[-5.0 to 5.0 / **0** / 0.1 mm/step]
	Adjusts the leading registration of the original rear side with the single pass DF.		
012	1st Buckle (1-Pass)	*ENG	[-3.0 to 3.0 / **0** / 0.1 mm/step]
	Adjusts the amount of paper buckle to correct original skew for the front side.		
013	2nd Buckle (1-Pass)	*ENG	[-2.0 to 3.0 / **0** / 0.1 mm/step]

WWW.SERVICE-MANUAL.NET

	Adjusts the amount of paper buckle to correct original skew for the rear side.		
014	T-Edge Erase (1-Pass): Front	*ENG	[-5.0 to 5.0 / **-1** / 0.1 mm/step]
	Adjusts the erase margin of the front side at the original trailing edge.		
015	T-Edge Erase (1-Pass): Rear	*ENG	[-5.0 to 5.0 / **-1** / 0.1 mm/step]
	Adjusts the erase margin of the rear side at the original trailing edge.		

6007	[ADF INPUT Check]
	Displays the signals received from the sensors and switches of the ARDF. Only Bit 0 is used for ADF input check (☛ p.3-422 "Input and Output Check" in this section).

6008	[ADF OUTPUT Check]
	Activates the electrical components for functional check. It is not possible to activate more than one component at the same time (☛p.3-422 "Input and Output Check" in this section).

6009	[ADF Free Run]		
	Performs a DF free run in simplex, duplex mode or stamp mode.		
001	Free Run Simplex Motion	-	-
002	Free Run Duplex Motion	-	
003	Free Run Stamp Motion	-	

6010	[Stamp Position Adj.] Fax Stamp Position Adjustment		
	Adjusts the horizontal position of the stamp on the scanned originals.		
6010 1	Stamp Position Adj.	*ENG	[-5.0 to 5.0 / **0** / 1 mm/step]

WWW.SERVICE-MANUAL.NET

6011	1-Pass ADF INPUT Check		
	Open SP mode SP6011. Select the SP number that corresponds to the component you wish to check. (Refer to the table below.) Press On then press Off to test the selected item. You cannot exit and close this display until you click Off to switch off the output check currently executing.		
	Description	Reading	
0		1	
001	Original Length 1 (B5 Sensor)	No paper	Paper detected
002	Original Length 2 (A4 Sensor)	No paper	Paper detected
003	Original Length 3 (LG Sensor)	No paper	Paper detected
004	Original Width 1	No paper	Paper detected
005	Original Width 2	No paper	Paper detected
006	Original Width 3	No paper	Paper detected
007	Original Width 4	No paper	Paper detected
008	Original Width 5	No paper	Paper detected
009	Original Detection	No paper	Paper detected
010	Separation Sensor	No paper	Paper detected
011	Skew Correction Sensor	No paper	Paper detected
012	Scan Entrance Sensor	No paper	Paper detected
013	Registration Sensor	No paper	Paper detected
014	Exit Sensor	No paper	Paper detected
015	Feed Cover Sensor	Open	Close

WWW.SERVICE-MANUAL.NET

016	Lift Up Sensor	Open	Close
018	Pick-up Roller HP Sensor	Not HP	HP
021	Bottom Plate HP Sensor	Not HP	HP
022	Bottom Plate Position Sensor	Not Correct Position	Correct Position

6012	1-Pass ADF OUTPUT Check
	Turns on the ADF electrical components individually for testing. Open SP mode SP6012. Select the SP number that corresponds to the component you wish to check. Press [On] then press [Off]to test the selected item. You cannot exit and close this display until you click Off to switch off the output check currently executing.
001	Pick-Up Motor Forward
003	Feed Motor Forward
004	Feed Motor Reverse
005	Relay Motor Forward
009	Exit Motor Forward
010	Bottom Plate Motor For/Rev
011	Stamp
012	Fan Motor Forward

WWW.SERVICE-MANUAL.NET

6016	[Original Size Detection Priority] Original Size Detection Priority			
	Specifies the original size for a size detected by the original sensor, since original sensors cannot recognize all sizes.			
001	Original Size Detection Priority	*ENG	[0 or 1 / **0** / -] 0: Setting 1, 1: Setting 2	
		NA	Setting 1	Setting 2
			DLT SEF	Folio SEF 11" x 15"
			LG SEF	Foolscap SEF
			LT SEF	US EXE 8" x 10"
			LT LEF	US EXE LEF
		EU/ ASIA	DLT SEF	8K 267 x 390 mm
			LT SEF	16K 195 x 267 mm
			LT LEF	16K 267 x 195 mm

6017	[DF Magnification Adj.] DF Magnification Adjustment		
	Adjusts the magnification in the sub-scan direction for the ARDF.		
001	DF Magnification Adj.	*CTL	[-5.0 to 5.0 / **0** / 0.1 %/step]

6020	[Skew Correction Moving Setting]		
	Turns the original skew correction in the ARDF for all original sizes on or off.		
001	-	*ENG	[0 or 1 / **0** / -] 0: Off (only for small original sizes) 1: On (for all original sizes)

WWW.SERVICE-MANUAL.NET

6128	[Punch Position: Sub Scan]		
	Adjusts the punching position in the sub scan direction.		
001	1.Domestic 2Hole (Europe 2Hole)	*ENG	[-7.5 to 7.5 / **0** / 0.5 mm/step]
002	2.North America 3Hole	*ENG	
003	3.Europe 4Hole	*ENG	
004	4.North Europe 4Hole	*ENG	
005	5.North Europe 2Hole	*ENG	

6129	[Punch Position: Main Scan]		
	Adjusts the punching position in the main scan direction.		
001	1.Domestic 2Hole (Europe 2Hole)	*ENG	[-2.0 to 2.0 / **0** / 0.4 mm/step]
002	2.North America 3Hole	*ENG	
003	3.Europe 4Hole	*ENG	
004	4.North Europe 4Hole	*ENG	
005	5.North Europe 2Hole	*ENG	

WWW.SERVICE-MANUAL.NET

6130	[Skew Correction: Buckle Adj.]		
	Adjusts the paper buckle for each paper size.		
001	A3T	*ENG	[-5.0 to 5.0 / **0** / 0.25 mm/step]
002	B4T	*ENG	
003	A4T	*ENG	
004	A4Y	*ENG	
005	B5T	*ENG	
006	B5Y	*ENG	
007	DLT-T	*ENG	
008	LG-T	*ENG	
009	LT-T	*ENG	
010	LT-Y	*ENG	
011	12" x 18"	*ENG	
012	Other	*ENG	

6131	[Skew Correction Control]		
	Selects the skew correction control for each paper size. These are only activated for B804/B805.		
001	A3T	*ENG	[0 or 1 / **1** / 1/step] 0: No (No skew correction) 1: Roller Stop Skew Correction
002	B4T	*ENG	
003	A4T	*ENG	
004	A4Y	*ENG	
005	B5T	*ENG	
006	B5Y	*ENG	
007	DLT-T	*ENG	

WWW.SERVICE-MANUAL.NET

008	LG-T	*ENG	
009	LT-T	*ENG	
010	LT-Y	*ENG	
011	12" x 18"	*ENG	
012	Other	*ENG	

6132	[Jogger Fence Fine Adj]		
	This SP adjusts the distance between the jogger fences and the sides of the stack on the finisher stapling tray in the (Booklet) Finisher B804/B805. The adjustment is done perpendicular to the direction of paper feed.		
001	A3T	*ENG	[-1.5 to 1.5 / **0** / 0.5 mm/step] + Value: Increases distance between jogger fences and the sides of the stack. - Value: Decreases the distance between the jogger fences and the sides of the stack.
002	B4T	*ENG	
003	A4T	*ENG	
004	A4Y	*ENG	
005	B5T	*ENG	
006	B5Y	*ENG	
007	DLT-T	*ENG	
008	LG-T	*ENG	
009	LT-T	*ENG	
010	LT-Y	*ENG	
011	12" x 18"	*ENG	
012	Other	*ENG	

WWW.SERVICE-MANUAL.NET

6133	[Staple Position Adjustment]		
	Adjusts the staple position for each finisher (B408/B804/B805). + Value: Moves the staple position to the rear side. - Value: Moves the staple position to the front side.		
001	Finisher (B408/B804/B805)	*ENG	[-3.5 to 3.5 / **0** / 1/step]

6134	[Saddle Stitch Position Adjustment]	
	Use this SP to adjust the stapling position of the booklet stapler when paper is stapled and folded in the Booklet Finisher B804.	
001	A3T	[-3.0 to 3.0 / **0** / 0.2 mm/step] + Value: Shifts staple position toward the crease. - Value: Shifts staple position away from the crease. 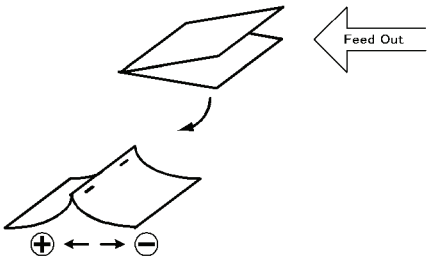
002	B4T	
003	A4T	
004	B5T	
005	DLT-T	
006	LG-T	
007	LT-T	
008	12" x 18"	
009	Other	

6135	[Folder Position Adj.]	
	This SP corrects the folding position when paper is stapled and folded in the Booklet Finisher B804.	
001	A3T	[-3.0 to 3.0 / 0 / 0.2 mm/step] + Value: Shifts staple position toward the crease. - Value: Shifts staple position away from the crease.
002	B4T	
003	A4T	
004	B5T	

WWW.SERVICE-MANUAL.NET

005	DLT-T	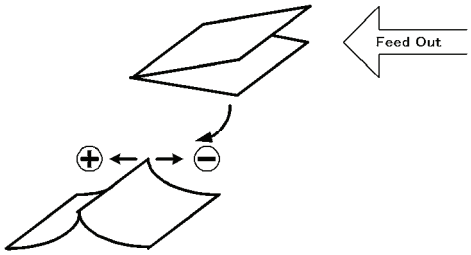
006	LG-T	
007	LT-T	
008	12" x 18"	
009	Other	

6136	[Folding Number]	
	Sets the number of times that folding is done in the Booklet Finisher B804.	
001	-	[2 to 30 / **2** / 1 time/step]

6137	[Fin. Free Run] Not used	
	These SPs are used only for B793 finisher.	
001	Free Run 1	Free run for paper edge stapling.
002	Free Run 2	Free run for booklet stapling.
003	Free Run 3	Shipping free run. Simulates standby conditions during shipping.
004	Free Run 4	**DFU**

6138	[FIN (TIG) INPUT Check] Finisher (B793) Input Check
	Not Used in this machine

6139	[FIN (KIN) INPUT Check] Finisher (B408) Input Check
	Displays the signals received from sensors and switches of the booklet finisher. (☛p.3-422 "Input and Output Check" in this section)

6140	[FIN (EUP) INPUT Check] Finisher (B804/B805) Input Check
	Displays the signals received from sensors and switches of the (booklet)

WWW.SERVICE-MANUAL.NET

	finisher. (☛p.3-422 "Input and Output Check" in this section)

6141	[FIN (ELB) INPUT Check] Finisher (D372) Input Check
	Not Used in this machine

6143	[FIN (TIG) OUPUT Check] Finisher (B793) Output Check
	Not Used in this machine

6144	[FIN (KIN) OUPUT Check] Finisher (B408) Output Check
	Displays the signals received from sensors and switches of the booklet finisher. (☛p.3-422 "Input and Output Check" in this section)

6145	[FIN (EUP) OUPUT Check] Finisher (B804/B805) Output Check
	Displays the signals received from sensors and switches of the (booklet) finisher. (☛p.3-422 "Input and Output Check" in this section)

6146	[FIN (ELB) OUTPUT Check] Finisher (D372) Output Check
	Not Used in this machine

6149	[Max. Pre-Stack Sheet]	*ENG	Number of Pre-Stack Sheets
	This SP sets the number of sheets sent to the pre-stack tray. **Note**: You may need to adjust this setting or switch it off when feeding thick or slick paper.		
001	-	[0 to 3 / **3** / 1 sheet/step]	

6150	[INPUT Check]
	Displays the signals received from sensors and switches of the bridge unit (D386) / side tray (D542) (☛p.3-422 "Input and Output Check" in this section).

WWW.SERVICE-MANUAL.NET

6151	[OUTPUT Check]
	Displays the signals received from sensors and switches of the brisge unit (D386) / side tray (D542) (☛p.3-422 "Input and Output Check" in this section).

6152	[INPUT Check]
	Displays the signals received from sensors and switches of the shift tray (D388) (☛p.3-422 "Input and Output Check" in this section).

6153	[OUTPUT Check]
	Displays the signals received from sensors and switches of the shift tray (D388) (☛p.3-422 "Input and Output Check" in this section).

6154	[INPUT Check]
	Displays the signals received from sensors and switches of the 1 bin tray (D536) (☛p.3-422 "Input and Output Check" in this section).

6155	[OUTPUT Check]
	Displays the signals received from sensors and switches of the 1 bin tray (D536) (☛p.3-422 "Input and Output Check" in this section)
001	1 bin: Junction Solenoid

6157	[OUTPUT Check]
	Not Used in this machine

6160	[INPUT Check]
	Displays the signals received from sensors and switches of the two-tray paper feed unit (D537), LCT 2000 (D538) and LCT 1200 (D539) (☛p.3-422 "Input and Output Check" in this section)

WWW.SERVICE-MANUAL.NET

6161	[OUTPUT Check]
	Displays the signals received from sensors and switches of the two-tray paper feed unit (D537), LCT 2000 (D538) and LCT 1200 (D539) (☛ p.3-422 "Input and Output Check"in this section)

6801	[1-pass Stamp Unit]
	Not used in this model

6830	[Extra Staples]
	Not used in this model

6900	[ADF Bottom Plate Setting]		
	This SP setting determines whether the bottom plate lift motor of the of the ADF switches on:		
001	A3T	*ENG	[0 or 1 / **0** / -] 0: Bottom plate lifts immediately after originals are set (Default) 1: Bottom plate does not lift until [Start] key is pushed.

WWW.SERVICE-MANUAL.NET

3.7 SYSTEM SP7-XXX

3.7.1 SP7-XXX (DATA LOG)

7401	[Total SC Counter]		
	Displays the number of SC codes detected.		
001	SC Counter	*CTL	[0 to 9999 / **0** / 1/step]

7403	[SC History]		
	Logs the SC codes detected. The 10 most recently detected SC Codes are not displayed on the screen, but can be seen on the SMC (logging) outputs.		
001	Latest	*CTL	-
002	Latest 1		
003	Latest 2		
004	Latest 3		
005	Latest 4		
006	Latest 5		
007	Latest 6		
008	Latest 7		
009	Latest 8		
010	Latest 9		

WWW.SERVICE-MANUAL.NET

7404	[SC991 History]		
	Logs the SC991 detected. The 10 most recently detected SC991 are not displayed on the screen, but can be seen on the SMC (logging) outputs.		
001	Latest	*CTL	-
002	Latest 1		
003	Latest 2		
004	Latest 3		
005	Latest 4		
006	Latest 5		
007	Latest 6		
008	Latest 7		
009	Latest 8		
010	Latest 9		

7502	[Total Paper Jam Counter]		
	Displays the total number of jams detected.		
001	Total Jam	* CTL	[0 to 9999 / **0** / 1 sheet/step]

7503	[Total Original Jam Counter]		
	Displays the total number of original jams.		
001	Original Jam counter	*CTL	[0 to 9999 / **0** / 1 original/step]

WWW.SERVICE-MANUAL.NET

7504	[Paper Jam Location] ON: On check, OFF: Off Check		
	Displays the number of jams according to the location where jams were detected. **NOTE:** The LCT is counted as the 3rd feed station.		
001	At Power On	*CTL	For details, (☛ "Jam Detection" in the "Main Chapters: Jam Detection" section.)
003	Tray 1: ON	*CTL	
004	Tray 2: ON	*CTL	
005	Tray 3: ON	*CTL	
006	Tray 4: ON	*CTL	
007	LCT : ON	*CTL	
008	Bypass: ON	*CTL	
009	Duplex: ON	*CTL	
011	Vertical Transport 1: ON	*CTL	
012	Vertical Transport 2: ON	*CTL	
013	Bank: Transport Sn1	*CTL	For details, (☛ "Jam Detection" in the "Main Chapters: Jam Detection" section.)
014	Bank: Transport Sn2	*CTL	
017	Registration: ON	*CTL	
018	Fusing Entrance: ON	*CTL	
019	Fusing Exit: ON	*CTL	
020	Paper Exit: ON	*CTL	
021	Bridge Exit: ON	*CTL	
022	Bridge Transport: ON	*CTL	
024	Junction Gate Sensor : On	*CTL	
025	Duplex Exit: ON	*CTL	For details, (☛ "Jam Detection" in

WWW.SERVICE-MANUAL.NET

026	Duplex Entrance: ON (Out)	*CTL	the "Main Chapters: Jam Detection" section.)
027	Duplex Entrance: ON (Out)	*CTL	
051	Vertical Transport 1: Off	*CTL	
052	Vertical Transport 2: Off	*CTL	
053	Bank Transport 1: Off	*CTL	
054	Bank Transport 2: Off	*CTL	
057	Registration Sensor: Off	*CTL	
058	LCT Feed Sensor : Off	*CTL	
060	Paper Exit Off	*CTL	
061	Bridge Exit: Off	*CTL	
062	Bridge Transport: Off	*CTL	
064	Junction Gate Sensor : Off	*CTL	For details, (☛ "Jam Detection" in the "Main Chapters: Jam Detection" section.)
065	Duplex Exit: Off	*CTL	
066	Duplex Entrance: Off (In)	*CTL	
067	Duplex entrance : Off (Out)	*CTL	
100	Finisher Entrance: KIN	*CTL	
101	Finisher Shift Tray Exit: KIN	*CTL	
102	Finisher Staple: KIN	*CTL	
103	Finisher Exit: KIN	*CTL	
105	Finisher Tray Lift Motor: KIN	*CTL	
106	Finisher Jogger Motor: KIN	*CTL	
107	Finisher Shift Motor: KIN	*CTL	

WWW.SERVICE-MANUAL.NET

108	Finisher Staple Motor: KIN	*CTL	
109	Finisher Exit Motor: KIN	*CTL	For details, (☛ "Jam Detection" in the "Main Chapters: Jam Detection" section.)
191	Finisher Entrance: EUP	*CTL	
192	Finisher Proof Exit: EUP	*CTL	
193	Finisher Shift Tray Exit: EUP	*CTL	
194	Finisher Stapler Exit: EUP	*CTL	
195	Finisher Exit: EUP	*CTL	
198	Finisher Folder: EUP	*CTL	
199	Finisher Tray Motor: EUP	*CTL	
200	Finisher Jogger Motor: EUP	*CTL	For details, (☛ "Jam Detection" in the "Main Chapters: Jam Detection" section.)
201	Finisher Shift Motor: EUP	*CTL	
202	Finisher Staple Moving Motor: EUP	*CTL	
203	Finisher Staple Motor: EUP	*CTL	
204	Finisher Folder Motor: EUP	*CTL	
206	Finisher Punch Motor: EUP	*CTL	
230	Fin Exit	*CTL	
231	Insufficient Data	*CTL	

WWW.SERVICE-MANUAL.NET

7505	[Original Jam Detection]		
	Displays the total number of original jams by location.		
001	At Power On	*CTL	-
003	Separation Sensor: On	*CTL	
004	Skew Correction Sensor: On	*CTL	
005	Scanning Entrance Sn: On	*CTL	
006	Registration Sensor: On	*CTL	
007	Original Exit Sensor: On	*CTL	
008	Reverse Sensor: On	*CTL	
013	Separation Sensor: On	*CTL	For the single pass DF model only
014	Skew Correction Sensor: On	*CTL	
015	Scanning Entrance Sn: On	*CTL	
016	Registration Sensor: On	*CTL	
017	Original Exit Sensor: On	*CTL	
053	Separation Sensor: Off	*CTL	
054	Skew Correction Sn: Off	*CTL	
055	Scanning Entrance Sn: Off	*CTL	
056	Registration Sensor: Off	*CTL	
057	Original Exit Sensor: Off	*CTL	
058	Reverse Sensor: Off	*CTL	
063	Separation Sensor: Off	*CTL	For the single pass DF model only

WWW.SERVICE-MANUAL.NET

064	Skew Correction Sn: Off	*CTL	
065	Scanning Entrance Sn: Off	*CTL	
066	Registration Sensor: Off	*CTL	
067	Original Exit Sensor: Off	*CTL	

7506	[Jam Count by Paper Size]		
	Displays the number of jams according to the paper size.		
005	A4 LEF	*CTL	[0 to 9999 / **0** / 1 sheet/step]
006	A5 LEF		
014	B5 LEF		
038	LT LEF		
044	HLT LEF		
132	A3 SEF		
133	A4 SEF		
134	A5 SEF		
141	B4 SEF		
142	B5 SEF		
160	DLT SEF		
164	LG SEF		
166	LT SEF		
172	HLT SEF		
255	Others		

WWW.SERVICE-MANUAL.NET

7507	[Plotter Jam History]		
	Displays the 10 most recently detected paper jams.		
001	Latest	*CTL	-
002	Latest 1		
003	Latest 2		
004	Latest 3		
005	Latest 4		
006	Latest 5		
007	Latest 6		
008	Latest 7		
009	Latest 8		
010	Latest 9		

7508	[Original Jam History]		
	Displays the 10 most recently detected original jams.		
001	Latest	*CTL	-
002	Latest-1		
003	Latest-2		
004	Latest-3		
005	Latest-4		
006	Latest-5		
007	Latest-6		
008	Latest-7		
009	Latest-8		
010	Latest-9		

WWW.SERVICE-MANUAL.NET

7624	Part Replacement Operation ON/OFF	
	Selects the PM maintenance for each part.	
001	Drum Unit: Bk	[0 or 1 / **1** -] 0: No (Not PM maintenance) 1: Yes (PM maintenance)
002	Drum Unit: M	
003	Drum Unit: C	
004	Drum Unit: Y	
005	Development Unit: Bk	
006	Development Unit: M	
007	Development Unit: C	
008	Development Unit: Y	
009	Developer: Bk	
010	Developer: M	
011	Developer: C	
012	Developer: Y	
013	Image Transfer Belt	[0 or 1 / **1** -] 0: Not PM maintenance 1: PM maintenance
014	Image Transfer Cleaning Unit	
015	Fusing Unit	
016	Paper Transfer Roller Unit	
017	Waste Toner Bottle	
018	Fusing Roller	
019	Pressure Roller	

WWW.SERVICE-MANUAL.NET

7801	[ROM No/ Firmware Version]		
255	Engine	*CTL	Displays all versions and ROM numbers in the machine.

7803	[PM Counter Display] (Page, Unit, [Color])		
	Displays the number of sheets printed for each current maintenance unit. PM counters click up based on the number of A4 (LT) LEF size sheets printed. Therefore, the A3 (DLT) Double Count is activated. The Double Count cannot be deactivated. When a unit is replaced, the machine automatically detects that the new unit is installed. Then, the current PM counter value is automatically moved to the PM Counter - Previous (SP7-906-1 to 10) and is reset to “0”. The total number of sheets printed with the last unit replaced can be checked with SP7-906-1 to 10. NOTE: The LCT is counted as the 3rd feed station.		
001	Paper	*CTL	[0 to 9999999 / - / 1 sheet/ step]
002	Page: PCU: Bk	*ENG	[0 to 9999999 / - / 1 sheet/ step]
003	Page: PCU: M	*ENG	
004	Page: PCU: C	*ENG	
005	Page: PCU: Y	*ENG	
006	Page: Development Unit: Bk	*ENG	
007	Page: Development Unit: M	*ENG	
008	Page: Development Unit: C	*ENG	
009	Page: Development Unit: Y	*ENG	
010	Page: Developer: Bk	*ENG	

WWW.SERVICE-MANUAL.NET

011	Page: Developer: M	*ENG	
012	Page: Developer: C	*ENG	
013	Page: Developer: Y	*ENG	
014	Page: Image Transfer	*ENG	[0 to 9999999 / - / 1 sheet/ step]
015	Page: Cleaning Unit	*ENG	
016	Page: Fusing Unit	*ENG	
017	Page: Paper Transfer Unit	*ENG	
018	Page: Toner Collection Bottle	*ENG	
019	Page: Fusing Roller	*ENG	
020	Page: Pressure Roller	*ENG	
	Displays the number of revolutions of motors or clutches for each current maintenance unit. [0 to 9999999 / **0** / 1 revolution/step] When a unit is replaced, the machine automatically detects that the new unit is installed. Then, the current PM counter value is automatically moved to the PM Counter - Previous (SP7-906-11 to 20) and is reset to “0”. The total number of revolutions made with the last unit replaced can be checked with SP7-906-11 to 20.		
031	Rotation: PCU: Bk	*ENG	[0 to 999999999 / - / 1 mm/step]
032	Rotation: PCU: M		
033	Rotation: PCU: C		
034	Rotation: PCU: Y		
035	Rotation: Development Unit: Bk		
036	Rotation: Development Unit: M		

WWW.SERVICE-MANUAL.NET

037	Rotation: Development Unit: C		
038	Rotation: Development Unit: Y		
039	Rotation: Developer Bk		
040	Rotation: Developer M		
041	Rotation: Developer C		
042	Rotation: Developer Y		
043	Rotation: Image Transfer	*ENG	[0 to 999999999 / - / 1 mm/step]
044	Rotation: Cleaning Unit		
045	Rotation: Fusing Unit		
046	Rotation: Paper Transfer Unit		
047	Measurement: Toner Collection bottle	*ENG	[0 to 999999999 / - / 1 mg/step]
048	Rotation: Fusing Roller	*ENG	[0 to 999999999 / - / 1 mm/step]
049	Rotation: Pressure Roller		
	Displays the value given by the following formula: (Current revolution ÷ Target revolution) × 100. This shows how much of the unit's expected lifetime has been used up. The Rotation% counter is based on rotations, not prints. If the number of rotations reaches the limit, the machine enters the end condition for that unit. If the print count lifetime is reached first, the machine also enters the end condition, even though the R% counter is still less than 100%.		
061	Rotation (%): PCU: Bk	*ENG	[0 to 255 / - / 1 %/step]
062	Rotation (%): PCU: M		
063	Rotation (%): PCU: C		

WWW.SERVICE-MANUAL.NET

064	Rotation (%): PCU: Y		
065	Rotation (%): Development Unit: Bk		
066	Rotation (%): Development Unit: M		
067	Rotation (%): Development Unit: C		
068	Rotation (%): Development Unit: Y		
069	Rotation (%): Developer Bk		
070	Rotation (%): Developer M		
071	Rotation (%): Developer C		
072	Rotation (%): Developer Y		
073	Rotation (%): Image Transfer Belt	*ENG	[0 to 255 / - / 1 %/step]
074	Rotation (%): Cleaning Unit		
075	Rotation (%): Fusing Unit		
076	Rotation (%): Paper Transfer Unit		
077	Measurement (%): Toner Collection bottle		
078	Rotation (%): Fusing Roller		
079	Rotation (%): Pressure Roller		
	Displays the value given by the following formula: (Current printouts ÷ Target printouts) × 100. This shows how much of the unit's expected lifetime has been used up. The Page% counter is based on printouts, not revolutions. If the number of printouts reaches the limit, the machine enters the end condition for that unit. If the revolution count lifetime is reached first, the machine also enters the end condition, even though the Page% counter is still less than 100%.		

WWW.SERVICE-MANUAL.NET

091	Page (%): PCU Bk (Drum Unit)	*ENG	[0 to 255 / - / 1 %/step]
092	Page (%): PCU M (Drum Unit)		
093	Page (%): PCU C (Drum Unit)		
094	Page (%): PCU Y (Drum Unit)		
095	Page (%): Development Unit: Bk		
096	Page (%): Development Unit: M		
097	Page (%): Development Unit: C		
098	Page (%): Development Unit: Y		
099	Page (%): Developer: Bk	*ENG	[0 to 255 / - / 1 %/step]
100	Page (%): Developer: M		
101	Page (%): Developer: C		
102	Page (%): Developer: Y		
103	Page (%): Image Transfer		
104	Page (%): Cleaning Unit		
105	Page (%): Fusing Unit		
106	Page (%): Paper Transfer Unit		
107	Page (%): Fusing Roller		
108	Page (%): Pressure Roller		

7804	[PM Counter Reset] PM Counter Clear (Unit, [Color])		
	Clears the PM counter. Press the Enter key after the machine asks “Execute?”, which will store the PM counter value in SP7-906 (PM Counter - Previous) and reset the value of the current PM counter (SP7-803) to “0”.		
002	PCU (Drum Unit): Bk	-	-

WWW.SERVICE-MANUAL.NET

003	PCU (Drum Unit): M		
004	PCU (Drum Unit): C		
005	PCU (Drum Unit): Y		
006	PCU (Drum Unit): All		
007	Development Unit: Bk		
008	Development Unit: M		
009	Development Unit: C		
010	Development Unit: Y		
011	Development Unit: All		
012	Developer: Bk		
013	Developer: M		
014	Developer: C		
015	Developer: Y		
016	Developer: All		
017	Image Transfer Belt		
018	Cleaning Unit	-	-
019	Fusing Unit		
020	Paper Transfer Unit		
021	Toner Collection Bottle		
022	Fusing Roller		
023	Pressure Roller		
100	All		

WWW.SERVICE-MANUAL.NET

7807	[SC/Jam Counter Reset]		
	Clears the counters related to SC codes and paper jams.		
001	SC/Jam Clear	-	-

7826	[MF Error Counter] **Japan Only**
001	Error Total
002	Error Staple

7827	[MF Error Counter Clear] **Japan Only**

7832	[Self-Diagnose Result Display]		
	Displays the result of the diagnostics.		
001	Diag. Result	*CTL	-

7835	[ACC Counter]		
001	Copy ACC	*CTL	Displays the ACC exectuion times for each mode.
002	Printer ACC	*CTL	

7836	Total Memory Size
	Displays the memory capacity of the controller system.

WWW.SERVICE-MANUAL.NET

7852	[DF Glass Dust Check]		
	Counts the number of occurrences (0 to 65,535) when dust was detected on the scanning glass of the ADF or resets the dust detection counter. Counting is done only if SP4-020-1 (ADF Scan Glass Dust Check) is switched on.		
001	Dust Detection Counter	*CTL	[0 to 9999 / - / 1 /step]
002	Dust Detection Clear Counter	*CTL	[0 to 9999 / - / 1 /step]
003	Dust Detection Counter: Back	*CTL	[0 to 9999 / - / 1 /step]

7853	[Replacement Counter]		
	Displays the PM parts replacement number.		
001	PCU: Bk	*CTL	[0 to 255 / - / 1 /step]
002	PCU: M	*CTL	
003	PCU: C	*CTL	
004	PCU: Y	*CTL	
005	Development Unit: Bk	*CTL	
006	Development Unit: M	*CTL	
007	Development Unit: C	*CTL	
008	Development Unit: Y	*CTL	
009	Developer: Bk	*CTL	
010	Developer: M	*CTL	
011	Developer: C	*CTL	
012	Developer: Y	*CTL	
013	Image Transfer	*CTL	[0 to 255 / - / 1 /step]
014	Cleaning Unit	*CTL	
015	Fusing Unit	*CTL	

WWW.SERVICE-MANUAL.NET

016	Paper Transfer Unit	*CTL	
017	Toner Collection Bottle	*CTL	
018	Fusing Roller	*CTL	
019	Pressure Roller	*CTL	

7855	[Coverage Range] Sets the color coverage threshold. Coverage rate = Coverage per page / A4 full coverage (dots) x 100 There are three coverage counters: Color 1, Color 2, and Color 3 ▪ [A] 5% (default) is adjustable with SP7855-001. ▪ [B] 20% (default) is adjustable with SP7855-002. Note ▪ The setting value [B] must be set larger than [A]. The total numbers of printouts (BW printing plus color printing) for each coverage range are displayed with the following SPs. ▪ Color1 counter: SP8601-021 ▪ Color2 counter: SP8601-022 ▪ Color3 counter: SP8601-023		
001	Coverage Range 1	*CTL	[1 to 200 / **5** /1]
002	Coverage Range 2	*CTL	[1 to 200 / **20** /1]

7901	[Assert Info] **DFU** Records the location where a problem is detected in the program. The data stored in this SP is used for problem analysis.		
001	File Name	*CTL	-
002	Number of Lines		
003	Location		

WWW.SERVICE-MANUAL.NET

7906	[Prev. Unit PM Counter]		
	(Page or Rotations, Unit, [Color]), Dev.: Development Unit		
	Displays the number of sheets printed with the previous maintenance units.		
001	Paper	*CTL	[0 to 9999999 / - / 1 sheet/ step]
002	Page: PCU: Bk	*ENG	[0 to 9999999 / - / 1 sheet/ step]
003	Page: PCU: M	*ENG	
004	Page: PCU: C	*ENG	
005	Page: PCU: Y	*ENG	
006	Page: Development Unit: Bk	*ENG	
007	Page: Development Unit: M	*ENG	
008	Page: Development Unit: C	*ENG	
009	Page: Development Unit: Y	*ENG	
010	Page: Developer: Bk	*ENG	
011	Page: Developer: M	*ENG	
012	Page: Developer: C	*ENG	
013	Page: Developer: Y	*ENG	
014	Page: Image Transfer	*ENG	[0 to 9999999 / - / 1 sheet/ step]
015	Page: Cleaning Unit	*ENG	
016	Page: Fusing Unit	*ENG	
017	Page: Paper Transfer Unit	*ENG	
018	Page: Toner Collection Bottle	*ENG	
019	Page: Fusing Roller	*ENG	
020	Page: Pressure Roller	*ENG	
	Displays the number of revolutions for motors or clutches in the previous maintenance units.		

WWW.SERVICE-MANUAL.NET

031	Rotation: PCU: Bk	*ENG	[0 to 999999999 / - / 1 mm/step]
032	Rotation: PCU: M		
033	Rotation: PCU: C		
034	Rotation: PCU: Y		
035	Rotation: Development Unit: Bk		
036	Rotation: Development Unit: M		
037	Rotation: Development Unit: C		
038	Rotation: Development Unit: Y		
039	Rotation: Developer Bk		
040	Rotation: Developer M		
041	Rotation: Developer C		
042	Rotation: Developer Y		
043	Rotation: Image Transfer	*ENG	[0 to 999999999 / - / 1 mm/step]
044	Rotation: Cleaning Unit		
045	Rotation: Fusing Unit		
046	Rotation: Paper Transfer Unit		
047	Measurement: Toner Collection bottle	*ENG	[0 to 999999999 / - / 1 mg/step]
048	Rotation: Fusing Roller	*ENG	[0 to 999999999 / - / 1 mm/step]
049	Rotation: Pressure Roller		
	Displays the number of sheets printed with the previous maintenance unit or toner cartridge.		
061	Rotation (%): PCU: Bk	*ENG	[0 to 255 / - / 1 %/step]
062	Rotation (%): PCU: M		
063	Rotation (%): PCU: C		
064	Rotation (%): PCU: Y		

WWW.SERVICE-MANUAL.NET

065	Rotation (%): Development Unit: Bk		
066	Rotation (%): Development Unit: M		
067	Rotation (%): Development Unit: C		
068	Rotation (%): Development Unit: Y		
069	Rotation (%): Developer Bk		
070	Rotation (%): Developer M		
071	Rotation (%): Developer C		
072	Rotation (%): Developer Y		
073	Rotation (%): Image Transfer Belt	*ENG	[0 to 255 / - / 1 %/step]
074	Rotation (%): Cleaning Unit		
075	Rotation (%): Fusing Unit		
076	Rotation (%): Paper Transfer Unit		
077	Measurement (%): Toner Collection bottle		
078	Rotation (%): Fusing Roller		
079	Rotation (%): Pressure Roller		
	Displays the value given by the following formula: (Current count ÷ Yield count) x 100, where “Current count” is the current values in the counter for the part, and “Yield count” is the recommended yield.		
091	Page (%): PCU Bk (Drum Unit)	*ENG	[0 to 255 / - / 1 %/step]
092	Page (%): PCU M (Drum Unit)		
093	Page (%): PCU C (Drum Unit)		
094	Page (%): PCU Y (Drum Unit)		
095	Page (%): Development Unit: Bk		
096	Page (%): Development Unit: M		
097	Page (%): Development Unit: C		

WWW.SERVICE-MANUAL.NET

098	Page (%): Development Unit: Y		
099	Page (%): Developer: Bk	*ENG	[0 to 255 / - / 1 %/step]
100	Page (%): Developer: M		
101	Page (%): Developer: C		
102	Page (%): Developer: Y		
103	Page (%): Image Transfer		
104	Page (%): Cleaning Unit		
105	Page (%): Fusing Unit		
106	Page (%): Paper Transfer Unit		
107	Page (%): Fusing Roller		
108	Page (%): Pressure Roller		

7931	[Toner Bottle Bk]		
	Displays the toner bottle information for Bk.		
001	Machine Serial ID	*ENG	
002	Cartridge Ver	*ENG	
003	Brand ID	*ENG	
004	Area ID	*ENG	
005	Product ID	*ENG	
006	Color ID	*ENG	
007	Maintenance ID	*ENG	
008	New Product Information	*ENG	
009	Recycle Counter	*ENG	
010	Date	*ENG	
011	Serial No.	*ENG	

WWW.SERVICE-MANUAL.NET

012	Toner Remaining	*ENG	
013	EDP Code	*ENG	
014	End History	*ENG	
015	Refill Information	*ENG	
016	Attachment: Total Counter	*ENG	
017	Attachment: Color Counter	*ENG	
018	End: Total Counter	*ENG	
019	End: Color Counter	*ENG	
020	Attachment Date	*ENG	
021	End Date	*ENG	

7932	[Toner Bottle M]		
	Displays the toner bottle information for M.		
001	Machine Serial ID	*ENG	
002	Cartridge Ver	*ENG	
003	Brand ID	*ENG	
004	Area ID	*ENG	
005	Product ID	*ENG	
006	Color ID	*ENG	
007	Maintenance ID	*ENG	
008	New Product Information	*ENG	
009	Recycle Counter	*ENG	
010	Date	*ENG	
011	Serial No.	*ENG	
012	Toner Remaining	*ENG	

WWW.SERVICE-MANUAL.NET

013	EDP Code	*ENG	
014	End History	*ENG	
015	Refill Information	*ENG	
016	Attachment: Total Counter	*ENG	
017	Attachment: Color Counter	*ENG	
018	End: Total Counter	*ENG	
019	End: Color Counter	*ENG	
020	Attachment Date	*ENG	
021	End Date	*ENG	

7933	[Toner Bottle C]		
	Displays the toner bottle information for C.		
001	Machine Serial ID	*ENG	
002	Cartridge Ver	*ENG	
003	Brand ID	*ENG	
004	Area ID	*ENG	
005	Product ID	*ENG	
006	Color ID	*ENG	
007	Maintenance ID	*ENG	
008	New Product Information	*ENG	
009	Recycle Counter	*ENG	
010	Date	*ENG	
011	Serial No.	*ENG	
012	Toner Remaining	*ENG	
013	EDP Code	*ENG	

WWW.SERVICE-MANUAL.NET

014	End History	*ENG	
015	Refill Information	*ENG	
016	Attachment: Total Counter	*ENG	
017	Attachment: Color Counter	*ENG	
018	End: Total Counter	*ENG	
019	End: Color Counter	*ENG	
020	Attachment Date	*ENG	
021	End Date	*ENG	

7934	[Toner Bottle Y]		
	Displays the toner bottle information for Y.		
001	Machine Serial ID	*ENG	
002	Cartridge Ver	*ENG	
003	Brand ID	*ENG	
004	Area ID	*ENG	
005	Product ID	*ENG	
006	Color ID	*ENG	
007	Maintenance ID	*ENG	
008	New Product Information	*ENG	
009	Recycle Counter	*ENG	
010	Date	*ENG	
011	Serial No.	*ENG	
012	Toner Remaining	*ENG	
013	EDP Code	*ENG	
014	End History	*ENG	

WWW.SERVICE-MANUAL.NET

015	Refill Information	*ENG	
016	Attachment: Total Counter	*ENG	
017	Attachment: Color Counter	*ENG	
018	End: Total Counter	*ENG	
019	End: Color Counter	*ENG	
020	Attachment Date	*ENG	
021	End Date	*ENG	

7935	[Toner Bottle Log 1/2/3/4/5: Bk]		
001	Serial No.	*ENG	Displays the toner bottle information log 1 for Bk.
002	Attachment Date		
003	Attachment: Total Counter		
004	Refill Information		
011	Serial No.	*ENG	Displays the toner bottle information log 2 for Bk.
012	Attachment Date		
013	Attachment: Total Counter		
014	Refill Information		
021	Serial No.	*ENG	Displays the toner bottle information log 3 for Bk.
022	Attachment Date		
023	Attachment: Total Counter		
024	Refill Information		
031	Serial No.	*ENG	Displays the toner bottle information log 4 for Bk.
032	Attachment Date		
033	Attachment: Total Counter		
034	Refill Information		

WWW.SERVICE-MANUAL.NET

041	Serial No.	*ENG	Displays the toner bottle information log 5 for Bk.
042	Attachment Date		
043	Attachment: Total Counter		
044	Refill Information		

7936	[Toner Bottle Log 1/2/3/4/5: M]		
001	Serial No.	*ENG	Displays the toner bottle information log 1 for M.
002	Attachment Date		
003	Attachment: Total Counter		
004	Refill Information		
011	Serial No.	*ENG	Displays the toner bottle information log 2 for M.
012	Attachment Date		
013	Attachment: Total Counter		
014	Refill Information		
021	Serial No.	*ENG	Displays the toner bottle information log 3 for M.
022	Attachment Date		
023	Attachment: Total Counter		
024	Refill Information		
031	Serial No.	*ENG	Displays the toner bottle information log 4 for M.
032	Attachment Date		
033	Attachment: Total Counter		
034	Refill Information		
041	Serial No.	*ENG	Displays the toner bottle information log 5 for M.
042	Attachment Date		
043	Attachment: Total Counter		

WWW.SERVICE-MANUAL.NET

044	Refill Information		

7937	[Toner Bottle Log 1/2/3/4/5: C]		
001	Serial No.	*ENG	Displays the toner bottle information log 1 for C.
002	Attachment Date		
003	Attachment: Total Counter		
004	Refill Information		
011	Serial No.	*ENG	Displays the toner bottle information log 2 for C.
012	Attachment Date		
013	Attachment: Total Counter		
014	Refill Information		
021	Serial No.	*ENG	Displays the toner bottle information log 3 for C.
022	Attachment Date		
023	Attachment: Total Counter		
024	Refill Information		
031	Serial No.	*ENG	Displays the toner bottle information log 4 for C.
032	Attachment Date		
033	Attachment: Total Counter		
034	Refill Information		
041	Serial No.	*ENG	Displays the toner bottle information log 5 for C.
042	Attachment Date		
043	Attachment: Total Counter		
044	Refill Information		

WWW.SERVICE-MANUAL.NET

7938	[Toner Bottle Log 1/2/3/4/5: Y]		
001	Serial No.	*ENG	Displays the toner bottle information log 1 for Y.
002	Attachment Date		
003	Attachment: Total Counter		
004	Refill Information		
011	Serial No.	*ENG	Displays the toner bottle information log 2 for Y.
012	Attachment Date		
013	Attachment: Total Counter		
014	Refill Information		
021	Serial No.	*ENG	Displays the toner bottle information log 3 for Y.
022	Attachment Date		
023	Attachment: Total Counter		
024	Refill Information		
031	Serial No.	*ENG	Displays the toner bottle information log 4 for Y.
032	Attachment Date		
033	Attachment: Total Counter		
034	Refill Information		
041	Serial No.	*ENG	Displays the toner bottle information log 5 for Y.
042	Attachment Date		
043	Attachment: Total Counter		
044	Refill Information		

WWW.SERVICE-MANUAL.NET

7950	[Unit Replacement Date]		
001	Image Transfer Belt	*ENG	Displays the replacement date of each PM unit.
002	Cleaning Unit		
003	Paper Transfer Unit		
004	Fusing Unit		
005	Toner Collection Bottle		
006	PCDU:Bk (Drum Unit)	*ENG	Displays the replacement date of each PM unit.
007	PCDU:M (Drum Unit)		
008	PCDU:C (Drum Unit)		
009	PCDU:Y (Drum Unit)		
010	Fusing Roller		
011	Pressure Roller		

7951	[Remaining Day Counter]		
	Displays the remaining unit life of each PM unit.		
001	Page: PCU (Drum): Bk	-	[0 to 255 / **255** / 1 day/step]
002	Page: PCU (Drum): M	-	
003	Page: PCU (Drum): C	-	
004	Page: PCU (Drum): Y	-	
005	Page: Development Unit: Bk	-	
006	Page: Development Unit: M	-	
007	Page: Development Unit: C	-	
008	Page: Development Unit: Y	-	
009	Page: Developer: Bk	-	
010	Page: Developer: M	-	

WWW.SERVICE-MANUAL.NET

011	Page: Developer: C	-	
012	Page: Developer: Y	-	
013	Page: Image Transfer	-	[0 to 255 / **255** / 1 day/step]
014	Page: Cleaning Unit		
015	Page: Fusing Unit		
016	Page: Paper Transfer Unit		
017	Page: Fusing Roller		
018	Page: Pressure Roller		
031	Rotation: PCU (Drum): Bk	-	[0 to 255 / **255** / 1 day/step]
032	Rotation: PCU (Drum): M		
033	Rotation: PCU (Drum): C		
034	Rotation: PCU (Drum): Y		
035	Rotation: Development Unit: Bk		
036	Rotation: Development Unit: M		
037	Rotation: Development Unit: C		
038	Rotation: Development Unit: Y		
039	Rotation: Developer: Bk		
040	Rotation: Developer: M		
041	Rotation: Developer: C		
042	Rotation: Developer: Y		

WWW.SERVICE-MANUAL.NET

043	Rotation: Image Transfer	-	[0 to 255 / **255** / 1 day/step]
044	Rotation: Cleaning Unit		
045	Rotation: Fusing Unit		
046	Rotation: Paper Transfer Unit		
047	Measurement: Toner Collection bottle		
048	Page: Fusing Roller		
049	Page: Pressure Roller		

7952	[PM Yield Setting]		
	Adjusts the unit yield of each PM unit.		
001	Rotation: Image Transfer Belt	*CTL	[0 to 999999999 / **305787000** / 1 mm/step]
002	Rotation: Cleaning Unit	*CTL	[0 to 999999999 / **101929000** / 1 mm/step]
003	Rotation: Fusing Unit	*CTL	[0 to 999999999 / **C2.5c: 161979000, C2.5d: 185631000** / 1 mm/step]
004	Rotation: Paper Transfer Unit	*CTL	[0 to 999999999 / **152894000** / 1 mm/step]
011	Page: Image Transfer Belt	*CTL	[0 to 999999 / **600000** / 1 sheet/step]
012	Page: Cleaning Unit	*CTL	[0 to 999999 / **200000** / 1 sheet/step]
013	Page: Fusing Unit	*CTL	[0 to 999999 / **300000** / 1 sheet/step]
014	Page: Paper Transfer Unit	*CTL	[0 to 999999 / **300000** / 1 sheet/step]
021	Day Threshold: PCU (Drum): Bk	-	Adjusts the threshold day for the near end fro each PM unit. [1 to 30 / **15** / 1 day/step] These threshold days are used for @Remote alarms.
022	Day Threshold: PCU (Drum): M		
023	Day Threshold: PCU		

WWW.SERVICE-MANUAL.NET

	(Drum): C		
024	Day Threshold: PCU (Drum): Y		
025	Day Threshold: Development Unit: Bk		
026	Day Threshold: Development Unit: M		
027	Day Threshold: Development Unit: C		
028	Day Threshold: Development Unit: Y		
029	Day Threshold: Developer: Bk	-	Adjusts the threshold day for the near end fro each PM unit. [1 to 30 / **15** / 1 day/step] These threshold days are used for @Remote alarms.
030	Day Threshold: Developer: M		
031	Day Threshold: Developer: C		
032	Day Threshold: Developer: Y		
033	Day Threshold: Image Transfer Belt		
034	Day Threshold: Cleaning Unit		
035	Day Threshold: Fusing Unit		
036	Day Threshold: PTR Unit		
037	Day Threshold: Toner Collection Bottle		

WWW.SERVICE-MANUAL.NET

038	Rotation: PCU (Drum Unit): Bk	-	[0 to 999999999 / **0** / 1 mm/step]
039	Rotation: PCU (Drum Unit): M		
040	Rotation: PCU (Drum Unit): C		
041	Rotation: PCU (Drum Unit): Y		
042	Rotation: Development Unit: Bk	-	[0 to 999999999 / **0** / 1 mm/step]
043	Rotation: Development Unit: M		
044	Rotation: Development Unit: C		
045	Rotation: Development Unit: Y		
046	Rotation: Developer: Bk	-	[0 to 999999999 / **0** / 1 mm/step]
047	Rotation: Developer: M		
048	Rotation: Developer: C		
049	Rotation: Developer: Y		
050	Page: PCU (Drum Unit): Bk	-	[0 to 999999 / **0** / 1 sheet/step]
051	Page: PCU (Drum Unit): M		
052	Page: PCU (Drum Unit): C		
053	Page: PCU (Drum Unit): Y		
054	Page: Development Unit: Bk	-	[0 to 999999 / **0** / 1 sheet/step]
055	Page: Development Unit:		

WWW.SERVICE-MANUAL.NET

	M		
056	Page: Development Unit: C		
057	Page: Development Unit: Y		
058	Page: Developer: Bk	-	[0 to 999999 / **0** / 1 sheet/step]
059	Page: Developer: M		
060	Page: Developer: C		
061	Page: Developer: Y		

7953	[Operation Env. Log: PCU: Bk]		
	Displays the PCDU rotation distance in each specified operation environment. T: Temperature (°C), H: Relative Humidity (%)		
001	T<=0	*CTL	[0 to 99999999 / - / 1 mm/step]
002	0<T<=5:0<=H<30	*CTL	
003	0<T<=5: 30<=H<70	*CTL	
004	0<T<=5: 70<=H<=100	*CTL	
005	5<T<15: 0<=H<30	*CTL	
006	5<T<15: 30<=H<55	*CTL	
007	5<T<15: 55<=H<80	*CTL	
008	5<T<15: 80<=H<=100	*CTL	
009	15<=T<25: 0<=H<30	*CTL	
010	15<=T<25: 30<=H<55	*CTL	
011	15<=T<25: 55<=H<80	*CTL	
012	15<=T<25: 80<=H<=100	*CTL	
013	25<=T<30: 0<=H<30	*CTL	

WWW.SERVICE-MANUAL.NET

014	25<=T<30: 55<=H<55	*CTL	
015	25<=T<30: 55<=H<80	*CTL	
016	25<=T<30: 80<=H<=100	*CTL	
017	30<=T: 0<=H<30	*CTL	
018	30<=T: 30<=H<55	*CTL	
019	30<=T: 55<=H<80	*CTL	
020	30<=T: 80<=H<=100	*CTL	

7954	[Operation Env. Log Clear]		
	Clears the operation environment log.		
001		-	

7955	[Fusing: Stop]		
001	Near End: Page	-	[0 to 999999 / **318000** / 1 sheet/step]
	Specifies the threshold sheets of the fusing unit near end alarm.		
002	End: Page	-	[0 to 999999 / **330000** / 1 sheet/step]
	Specifies the threshold sheets of the fusing stop function.		
003	Near End: Rotation	-	[0 to 999999999 / **190577000** / 1000 mm /step]
	Specifies the threshold rotation distance of the fusing unit near end alarm.		
004	End: Rotation	-	[0 to 999999999 / **197769000** / 1000 mm /step]
	Specifies the threshold rotation distance of the fusing stop function.		

WWW.SERVICE-MANUAL.NET

3.8 SYSTEM SP8-XXX

3.8.1 SP8-XXX: DATA LOG2

Many of these counters are provided for features that are currently not available, such as sending color faxes, and so on. However, here are some Group 8 codes that when used in combination with others, can provide useful information.

SP Numbers	What They Do
SP8211 to SP8216	The number of pages scanned to the document server.
SP8401 to SP8406	The number of pages printed from the document server
SP8691 to SP8696	The number of pages sent from the document server

Specifically, the following questions can be answered:

- How is the document server actually being used?
- What application is using the document server most frequently?
- What data in the document server is being reused?

Most of the SPs in this group are prefixed with a letter that indicates the mode of operation (the mode of operation is referred to as an “application”). Before reading the Group 8 Service Table, make sure that you understand what these prefixes mean.

Prefixes	What it means	
T:	Total: (Grand Total).	Grand total of the items counted for all applications (C, F, P, etc.).
C:	Copy application.	Totals (pages, jobs, etc.) executed for each application when the job was not stored on the document server.
F:	Fax application.	
P:	Print application.	
S:	Scan application.	
L:	Local storage (document server)	Totals (jobs, pages, etc.) for the document server. The L: counters work differently case by case. Sometimes, they count jobs/pages stored on the document server; this can be in document server

WWW.SERVICE-MANUAL.NET

		mode (from the document server window), or from another mode, such as from a printer driver or by pressing the Store File button in the Copy mode window. Sometimes, they include occasions when the user uses a file that is already on the document server. Each counter will be discussed case by case.
O:	Other applications (external network applications, for example)	Refers to network applications such as Web Image Monitor. Utilities developed with the SDK (Software Development Kit) will also be counted with this group in the future.

The Group 8 SP codes are limited to 17 characters, forced by the necessity of displaying them on the small LCDs of printers and faxes that also use these SPs. Read over the list of abbreviations below and refer to it again if you see the name of an SP that you do not understand.

Key for Abbreviations

Abbreviation	What it means
/	“By”, e.g. “T:Jobs/Apl” = Total Jobs “by” Application
>	More (2> “2 or more”, 4> “4 or more”
AddBook	Address Book
Apl	Application
B/W	Black & White
Bk	Black
C	Cyan
ColCr	Color Create
ColMode	Color Mode
Comb	Combine
Comp	Compression

WWW.SERVICE-MANUAL.NET

Abbreviation	What it means
Deliv	Delivery
DesApl	Designated Application. The application (Copy, Fax, Scan, Print) used to store the job on the document server, for example.
Dev Counter	Development Count, no. of pages developed.
Dup, Duplex	Duplex, printing on both sides
Emul	Emulation
FC	Full Color
FIN	Post-print processing, i.e. finishing (punching, stapling, etc.)
Full Bleed	No Margins
GenCopy	Generation Copy Mode
GPC	Get Print Counter. For jobs 10 pages or less, this counter does not count up. For jobs larger than 10 pages, this counter counts up by the number that is in excess of 10 (e.g., for an 11-page job, the counter counts up 11-10 =1)
IFax	Internet Fax
ImgEdt	Image Edit performed on the original with the copier GUI, e.g. border removal, adding stamps, page numbers, etc.
K	Black (YMCK)
LS	Local Storage. Refers to the document server.
LSize	Large (paper) Size
Mag	Magnification
MC	One color (monochrome)
NRS	New Remote Service, which allows a service center to monitor machines remotely. “NRS” is used overseas, “CSS” is used in Japan.
Org	Original for scanning

WWW.SERVICE-MANUAL.NET

Abbreviation	What it means
OrgJam	Original Jam
Palm 2	Print Job Manager/Desk Top Editor: A pair of utilities that allows print jobs to be distributed evenly among the printers on the network, and allows files to moved around, combined, and converted to different formats.
PC	Personal Computer
PGS	Pages. A page is the total scanned surface of the original. Duplex pages count as two pages, and A3 simplex count as two pages if the A3/DLT counter SP is switched ON.
PJob	Print Jobs
Ppr	Paper
PrtJam	Printer (plotter) Jam
PrtPGS	Print Pages
R	Red (Toner Remaining). Applies to the wide format model A2 only. This machine is under development and currently not available.
Rez	Resolution
SC	Service Code (Error SC code displayed)
Scn	Scan
Sim, Simplex	Simplex, printing on 1 side.
S-to-Email	Scan-to-E-mail
SMC	SMC report printed with SP5990. All of the Group 8 counters are recorded in the SMC report.
Svr	Server
TonEnd	Toner End
TonSave	Toner Save
TXJob	Send, Transmission

WWW.SERVICE-MANUAL.NET

Abbreviation	What it means
YMC	Yellow, Magenta, Cyan
YMCK	Yellow, Magenta, Cyan, Black

Note

- All of the Group 8 SPs are reset with SP5 801 1 Memory All Clear.

8 001	T:Total Jobs	*CTL	These SPs count the number of times each application is used to do a job. [0 to 9999999/ **0** / 1] **Note**: The L: counter is the total number of times the other applications are used to send a job to the document server, plus the number of times a file already on the document server is used.
8 002	C:Total Jobs	*CTL	
8 003	F:Total Jobs	*CTL	
8 004	P:Total Jobs	*CTL	
8 005	S:Total Jobs	*CTL	
8 006	L:Total Jobs	*CTL	

- These SPs reveal the number of times an application is used, not the number of pages processed.
- When an application is opened for image input or output, this counts as one job.
- Interrupted jobs (paper jams, etc.) are counted, even though they do not finish.
- Only jobs executed by the customer are counted. Jobs executed by the customer engineer using the SP modes are not counted.
- When using secure printing (when a password is required to start the print job), the job is counted at the time when either “Delete Data” or “Specify Output” is specified.
- A job is counted as a fax job when the job is stored for sending.
- When a fax is received to fax memory, the F: counter increments but the L: counter does not (the document server is not used).
- A fax broadcast counts as one job for the F: counter (the fax destinations in the broadcast are not counted separately).
- A fax broadcast is counted only after all the faxes have been sent to their destinations. If one transmission generates an error, then the broadcast will not be counted until the transmission has been completed.
- A printed fax report counts as one job for the F: counter.
- The F: counter does not distinguish between fax sending or receiving.
- When a copy job on the document server is printed, SP8022 also increments, and when

WWW.SERVICE-MANUAL.NET

a print job stored on the document server is printed, SP8024 also increments.

- When an original is both copied and stored on the document server, the C: and L: counters both increment.
- When a print job is stored on the document server, only the L: counter increments.
- When the user presses the Document Server button to store the job on the document server, only the L: counter increments.
- When the user enters document server mode and prints data stored on the document server, only the L: counter increments.
- When an image received from Palm 2 is received and stored, the L: counter increments.
- When the customer prints a report (user code list, for example), the O: counter increments. However, for fax reports and reports executed from the fax application, the F: counter increments.

8 011	T:Jobs/LS	*CTL	These SPs count the number of jobs stored to the document server by each application, to reveal how local storage is being used for input. [0 to 9999999/ **0** / 1] The L: counter counts the number of jobs stored from within the document server mode screen at the operation panel.
8 012	C:Jobs/LS	*CTL	
8 013	F:Jobs/LS	*CTL	
8 014	P:Jobs/LS	*CTL	
8 015	S:Jobs/LS	*CTL	
8 016	L:Jobs/LS	*CTL	
8 017	O:Jobs/LS	*CTL	

- When a scan job is sent to the document server, the S: counter increments. When you enter document server mode and then scan an original, the L: counter increments.
- When a print job is sent to the document server, the P: counter increments.
- When a network application sends data to the document server, the O: counter increments.
- When an image from Palm 2 is stored on the document server, the O: counter increments.
- When a fax is sent to the document server, the F: counter increments.

WWW.SERVICE-MANUAL.NET

8 021	T:Pjob/LS	*CTL	These SPs reveal how files printed from the document server were stored on the document server originally. [0 to 9999999/ **0** / 1] The L: counter counts the number of jobs stored from within the document server mode screen at the operation panel.
8 022	C:Pjob/LS	*CTL	
8 023	F:Pjob/LS	*CTL	
8 024	P:Pjob/LS	*CTL	
8 025	S:Pjob/LS	*CTL	
8 026	L:Pjob/LS	*CTL	
8 027	O:Pjob/LS	*CTL	

- When a copy job stored on the document server is printed with another application, the C: counter increments.
- When an application like DeskTopBinder merges a copy job that was stored on the document server with a print job that was stored on the document server, the C: and P: counters both increment.
- When a job already on the document server is printed with another application, the L: counter increments.
- When a scanner job stored on the document server is printed with another application, the S: counter increments. If the original was scanned from within document server mode, then the L: counter increments.
- When images stored on the document server by a network application (including Palm 2), are printed with another application, the O: counter increments.
- When a copy job stored on the document server is printed with a network application (Web Image Monitor, for example), the C: counter increments.
- When a fax on the document server is printed, the F: counter increments.

WWW.SERVICE-MANUAL.NET

8 031	T:Pjob/DesApl	*CTL	These SPs reveal what applications were used to output documents from the document server. [0 to 9999999/ **0** / 1] The L: counter counts the number of jobs printed from within the document server mode screen at the operation panel.
8 032	C:Pjob/DesApl	*CTL	
8 033	F:Pjob/DesApl	*CTL	
8 034	P:Pjob/DesApl	*CTL	
8 035	S:Pjob/DesApl	*CTL	
8 036	L:Pjob/DesApl	*CTL	
8 037	O:Pjob/DesApl	*CTL	

- When documents already stored on the document server are printed, the count for the application that started the print job is incremented.
- When the print job is started from a network application (Desk Top Binder, Web Image Monitor, etc.) the L: counter increments.

8 041	T:TX Jobs/LS	*CTL	These SPs count the applications that stored files on the document server that were later accessed for transmission over the telephone line or over a network (attached to an e-mail, or as a fax image by I-Fax). [0 to 9999999/ **0** / 1] **Note**: Jobs merged for sending are counted separately. The L: counter counts the number of jobs scanned from within the document server mode screen at the operation panel.
8 042	C:TX Jobs/LS	*CTL	
8 043	F:TX Jobs/LS	*CTL	
8 044	P:TX Jobs/LS	*CTL	
8 045	S:TX Jobs/LS	*CTL	
8 046	L:TX Jobs/LS	*CTL	
8 047	O:TX Jobs/LS	*CTL	

- When a stored copy job is sent from the document server, the C: counter increments.
- When images stored on the document server by a network application or Palm2 are sent as an e-mail, the O: counter increments.

WWW.SERVICE-MANUAL.NET

8 051	T:TX Jobs/DesApl	*CTL	These SPs count the applications used to send files from the document server over the telephone line or over a network (attached to an e-mail, or as a fax image by I-Fax). Jobs merged for sending are counted separately. [0 to 9999999/ **0** / 1] The L: counter counts the number of jobs sent from within the document server mode screen at the operation panel.
8 052	C:TX Jobs/DesApl	*CTL	
8 053	F:TX Jobs/DesApl	*CTL	
8 054	P:TX Jobs/DesApl	*CTL	
8 055	S:TX Jobs/DesApl	*CTL	
8 056	L:TX Jobs/DesApl	*CTL	
8 057	O:TX Jobs/DesApl	*CTL	

- If the send is started from Desk Top Binder or Web Image Monitor, for example, then the O: counter increments.

WWW.SERVICE-MANUAL.NET

8 061	T:FIN Jobs	*CTL	[0 to 9999999/ **0** / 1]
	These SPs total the finishing methods. The finishing method is specified by the application.		
8 062	C:FIN Jobs	*CTL	[0 to 9999999/ **0** / 1]
	These SPs total finishing methods for copy jobs only. The finishing method is specified by the application.		
8 063	F:FIN Jobs	*CTL	[0 to 9999999/ **0** / 1]
	These SPs total finishing methods for fax jobs only. The finishing method is specified by the application. **Note**: Finishing features for fax jobs are not available at this time.		
8 064	P:FIN Jobs	*CTL	[0 to 9999999/ **0** / 1]
	These SPs total finishing methods for print jobs only. The finishing method is specified by the application.		
8 065	S:FIN Jobs	*CTL	[0 to 9999999/ **0** / 1]
	These SPs total finishing methods for scan jobs only. The finishing method is specified by the application. **Note**: Finishing features for scan jobs are not available at this time.		
8 066	L:FIN Jobs	*CTL	[0 to 9999999/ **0** / 1]
	These SPs total finishing methods for jobs output from within the document server mode screen at the operation panel. The finishing method is specified from the print window within document server mode.		
8 067	O:FIN Jobs	*CTL	[0 to 9999999/ **0** / 1]
	These SPs total finishing methods for jobs executed by an external application, over the network. The finishing method is specified by the application.		
8 06x 1	Sort	Number of jobs started in Sort mode. When a stored copy job is set for Sort and then stored on the document server, the L: counter increments. (See SP8 066 1)	
8 06x 2	Stack	Number of jobs started out of Sort mode.	

WWW.SERVICE-MANUAL.NET

8 06x 3	Staple	Number of jobs started in Staple mode.
8 06x 4	Booklet	Number of jobs started in Booklet mode. If the machine is in staple mode, the Staple counter also increments.
8 06x 5	Z-Fold	Number of jobs started In any mode other than the Booklet mode and set for folding (Z-fold).
8 06x 6	Punch	Number of jobs started in Punch mode. When Punch is set for a print job, the P: counter increments. (See SP8 064 6.)
8 06x 7	Other	Reserved. Not used.
8 06x 8	Inside-Fold	Number of jobs started In any mode other than the Booklet mode and set for folding (Inside-fold).
8 06x 9	Three-IN-Fold	Number of jobs started In any mode other than the Booklet mode and set for folding (Inside-IN-fold).
8 06x 10	Three-OUT-Fold	Number of jobs started In any mode other than the Booklet mode and set for folding (Inside-OUT-fold).

WWW.SERVICE-MANUAL.NET

8 071	T:Jobs/PGS	*CTL	[0 to 9999999/ **0** / 1]
	These SPs count the number of jobs broken down by the number of pages in the job, regardless of which application was used.		
8 072	C:Jobs/PGS	*CTL	[0 to 9999999/ **0** / 1]
	These SPs count and calculate the number of copy jobs by size based on the number of pages in the job.		
8 073	F:Jobs/PGS	*CTL	[0 to 9999999/ **0** / 1]
	These SPs count and calculate the number of fax jobs by size based on the number of pages in the job.		
8 074	P:Jobs/PGS	*CTL	[0 to 9999999/ **0** / 1]
	These SPs count and calculate the number of print jobs by size based on the number of pages in the job.		
8 075	S:Jobs/PGS		[0 to 9999999/ **0** / 1]
	These SPs count and calculate the number of scan jobs by size based on the number of pages in the job.		
8 076	L:Jobs/PGS	*CTL	[0 to 9999999/ **0** / 1]
	These SPs count and calculate the number of jobs printed from within the document server mode window at the operation panel, by the number of pages in the job.		
8 077	O:Jobs/PGS	*CTL	[0 to 9999999/ **0** / 1]
	These SPs count and calculate the number of “Other” application jobs (Web Image Monitor, Palm 2, etc.) by size based on the number of pages in the job.		
8 07x 1	1 Page	8 07x 8	21 to 50 Pages
8 07x 2	2 Pages	8 07x 9	51 to 100 Pages
8 07x 3	3 Pages	8 07x 10	101 to 300 Pages
8 07x 4	4 Pages	8 07x 11	301 to 500 Pages

WWW.SERVICE-MANUAL.NET

8 07x 5	5 Pages	8 07x 12	501 to 700 Pages
8 07x 6	6 to 10 Pages	8 07x 13	701 to 1000 Pages
8 07x 7	11 to 20 Pages	8 07x 14	1001 to Pages

- For example: When a copy job stored on the document server is printed in document server mode, the appropriate L: counter (SP8076 0xx) increments.
- Printing a fax report counts as a job and increments the F: counter (SP 8073).
- Interrupted jobs (paper jam, etc.) are counted, even though they do not finish.
- If a job is paused and re-started, it counts as one job.
- If the finisher runs out of staples during a print and staple job, then the job is counted at the time the error occurs.
- For copy jobs (SP 8072) and scan jobs (SP 8075), the total is calculated by multiplying the number of sets of copies by the number of pages scanned. (One duplex page counts as 2.)
- The first test print and subsequent test prints to adjust settings are added to the number of pages of the copy job (SP 8072).
- When printing the first page of a job from within the document server screen, the page is counted.

WWW.SERVICE-MANUAL.NET

8 111	T:FAX TX Jobs	*CTL	[0 to 9999999/ **0** / 1]
	These SPs count the total number of jobs (color or black-and-white) sent by fax, either directly or using a file stored on the document server, on a telephone line. **Note**: Color fax sending is not available at this time.		
8 113	F: FAX TX Jobs	*CTL	[0 to 9999999/ **0** / 1]
	These SPs count the total number of jobs (color or black-and-white) sent by fax directly on a telephone line. **Note**: Color fax sending is not available at this time.		
8 11x 1	B/W		
8 11x 2	Color		

- These counters count jobs, not pages.
- This SP counts fax jobs sent over a telephone line with a fax application, including documents stored on the document server.
- If the mode is changed during the job, the job will count with the mode set when the job started.
- If the same document is faxed to both a public fax line and an I-Fax at a destination where both are available, then this counter increments, and the I-Fax counter (8 12x) also increments.
- The fax job is counted when the job is scanned for sending, not when the job is sent.

WWW.SERVICE-MANUAL.NET

8 121	T:IFAX TX Jobs	*CTL	[0 to 9999999/ **0** / 1]
	These SPs count the total number of jobs (color or black-and-white) sent, either directly or using a file stored on the document server, as fax images using I-Fax. **Note**: Color fax sending is not available at this time.		
8 123	F: IFAX TX Jobs	*CTL	[0 to 9999999/ **0** / 1]
	These SPs count the number of jobs (color or black-and-white) sent (not stored on the document server), as fax images using I-Fax. **Note**: Color fax sending is not available at this time.		
8 12x 1	B/W		
8 12x 2	Color		

- These counters count jobs, not pages.
- The counters for color are provided for future use; the color fax feature is not available at this time.
- The fax job is counted when the job is scanned for sending, not when the job is sent.

WWW.SERVICE-MANUAL.NET

8 131	T:S-to-Email Jobs	*CTL	[0 to 9999999/ **0** / 1]
	These SPs count the total number of jobs (color or black-and-white) scanned and attached to an e-mail, regardless of whether the document server was used or not.		
8 135	S: S-to-Email Jobs	*CTL	[0 to 9999999/ **0** / 1]
	These SPs count the number of jobs (color or black-and-white) scanned and attached to e-mail, without storing the original on the document server.		
8 13x 1	B/W		
8 13x 2	Color		
8 13x 3	ACS		

- These counters count jobs, not pages.
- If the job is stored on the document server, after the job is stored it is determined to be color or black-and-white then counted.
- If the job is cancelled during scanning, or if the job is cancelled while the document is waiting to be sent, the job is not counted.
- If the job is cancelled during sending, it may or may not be counted, depending on what stage of the process had been reached when the job was cancelled.
- If several jobs are combined for sending to the Scan Router, Scan-to-Email, or Scan-to-PC, or if one job is sent to more than one destination. each send is counted separately. For example, if the same document is sent by Scan-to-Email as well as Scan-to-PC, then it is counted twice (once for Scan-to-Email and once for Scan-to-PC).

WWW.SERVICE-MANUAL.NET

8 141	T:Deliv Jobs/Svr	*CTL	[0 to 9999999/ **0** / 1]
	These SPs count the total number of jobs (color or black-and-white) scanned and sent to a Scan Router server.		
8 145	S: Deliv Jobs/Svr	*CTL	[0 to 9999999/ **0** / 1]
	These SPs count the number of jobs (color or black-and-white) scanned in scanner mode and sent to a Scan Router server.		
8 14x 1	B/W		
8 14x 2	Color		
8 14x 3	ACS		

- These counters count jobs, not pages.
- The jobs are counted even though the arrival and reception of the jobs at the Scan Router server cannot be confirmed.
- If even one color image is mixed with black-and-white images, then the job is counted as a “Color” job.
- If the job is cancelled during scanning, or if the job is cancelled while the document is waiting to be delivered, the job is not counted.
- If the job is cancelled during sending, it may or may not be counted, depending on what stage of the process had been reached when the job was cancelled.
- Even if several files are combined for sending, the transmission counts as one job.

WWW.SERVICE-MANUAL.NET

8 151	T:Deliv Jobs/PC	*CTL	[0 to 9999999/ **0** / 1]
	These SPs count the total number of jobs (color or black-and-white) scanned and sent to a folder on a PC (Scan-to-PC). **Note**: At the present time, 8 151 and 8 155 perform identical counts.		
8 155	S:Deliv Jobs/PC	*CTL	[0 to 9999999/ **0** / 1]
	These SPs count the total number of jobs (color or black-and-white) scanned and sent with Scan-to-PC.		
8 15x 1	B/W		
8 15x 2	Color		
8 15x 3	ACS		

- These counters count jobs, not pages.
- If the job is cancelled during scanning, it is not counted.
- If the job is cancelled while it is waiting to be sent, the job is not counted.
- If the job is cancelled during sending, it may or may not be counted, depending on what stage of the process had been reached when the job was cancelled.
- Even if several files are combined for sending, the transmission counts as one job.

8 161	T:PCFAX TX Jobs	*CTL	These SPs count the number of PC Fax transmission jobs. A job is counted from when it is registered for sending, not when it is sent. [0 to 9999999/ **0** / 1] **Note**: At the present time, these counters perform identical counts.
8 163	F:PCFAX TX Jobs	*CTL	

- This counts fax jobs started from a PC using a PC fax application, and sending the data out to the destination from the PC through the copier.

WWW.SERVICE-MANUAL.NET

8 171	T:Deliv Jobs/WSD	*CTL	These SPs count the pages scanned by WS. [0 to 9999999/ **0** / 1]
8 175	S:Deliv Jobs/WSD	*CTL	
-001	B/W		
-002	Color		
-003	ACS		

8 181	T:Scan to Media Jobs	*CTL	These SPs count the scanned pages in a media by the scanner application. [0 to 9999999/ **0** / 1]
8 185	S:Scan to Media Jobs	*CTL	
-001	B/W		
-002	Color		
-003	ACS		

8 191	T:Total Scan PGS	*CTL	These SPs count the pages scanned by each application that uses the scanner to scan images. [0 to 9999999/ **0** / 1]
8 192	C:Total Scan PGS	*CTL	
8 193	F:Total Scan PGS	*CTL	
8 195	S:Total Scan PGS	*CTL	
8 196	L:Total Scan PGS	*CTL	

- SP 8 191 to 8 196 count the number of scanned sides of pages, not the number of physical pages.
- These counters do not count reading user stamp data, or reading color charts to adjust color.
- Previews done with a scanner driver are not counted.
- A count is done only after all images of a job have been scanned.
- Scans made in SP mode are not counted.

Examples

- If 3 B5 pages and 1 A3 page are scanned with the scanner application but not stored, the

WWW.SERVICE-MANUAL.NET

S: count is 4.

- If both sides of 3 A4 sheets are copied and stored to the document server using the Store File button in the Copy mode window, the C: count is 6 and the L: count is 6.
- If both sides of 3 A4 sheets are copied but not stored, the C: count is 6.
- If you enter document server mode then scan 6 pages, the L: count is 6.

8 201	T:LSize Scan PGS	*CTL	[0 to 9999999/ **0** / 1]
	These SPs count the total number of large pages input with the scanner for scan and copy jobs. Large size paper (A3/DLT) scanned for fax transmission are not counted. **Note**: These counters are displayed in the SMC Report, and in the User Tools display.		
8 203	F: LSize Scan PGS	*CTL	[0 to 9999999/ **0** / 1]
	These SPs count the total number of large pages input with the scanner for fax transmission. **Note**: These counters are displayed in the SMC Report, and in the User Tools display.		
8 205	S:LSize Scan PGS	*CTL	[0 to 9999999/ **0** / 1]
	These SPs count the total number of large pages input with the scanner for scan jobs only. Large size paper (A3/DLT) scanned for fax transmission are not counted. **Note**: These counters are displayed in the SMC Report, and in the User Tools display.		

WWW.SERVICE-MANUAL.NET

8 211	T:Scan PGS/LS	*CTL	These SPs count the number of pages scanned into the document server . [0 to 9999999/ **0** / 1] The L: counter counts the number of pages stored from within the document server mode screen at the operation panel, and with the Store File button from within the Copy mode screen
8 212	C:Scan PGS/LS	*CTL	
8 213	F:Scan PGS/LS	*CTL	
8 215	S:Scan PGS/LS	*CTL	
8 216	L:Scan PGS/LS	*CTL	

- Reading user stamp data is not counted.
- If a job is cancelled, the pages output as far as the cancellation are counted.
- If the scanner application scans and stores 3 B5 sheets and 1 A4 sheet, the S: count is 4.
- If pages are copied but not stored on the document server, these counters do not change.
- If both sides of 3 A4 sheets are copied and stored to the document server, the C: count is 6 and the L: count is 6.
- If you enter document server mode then scan 6 pages, the L: count is 6.

WWW.SERVICE-MANUAL.NET

8 221	ADF Org Feeds	*CTL	[0 to 9999999/ **0** / 1]
	These SPs count the number of pages fed through the ADF for front and back side scanning.		
8 221 1	Front	Number of front sides fed for scanning: With an ADF that can scan both sides simultaneously, the Front side count is the same as the number of pages fed for either simplex or duplex scanning. With an ADF that cannot scan both sides simultaneously, the Front side count is the same as the number of pages fed for duplex front side scanning. (The front side is determined by which side the user loads face up.)	
8 221 2	Back	Number of rear sides fed for scanning: With an ADF that can scan both sides simultaneously, the Back count is the same as the number of pages fed for duplex scanning. With an ADF that cannot scan both sides simultaneously, the Back count is the same as the number of pages fed for duplex rear-side scanning.	

- When 1 sheet is fed for duplex scanning the Front count is 1 and the Back count is 1.
- If a jam occurs during the job, recovery processing is not counted to avoid double counting. Also, the pages are not counted if the jam occurs before the first sheet is output.

WWW.SERVICE-MANUAL.NET

8 231	Scan PGS/Mode	*CTL	[0 to 9999999/ **0** / 1]
	These SPs count the number of pages scanned by each ADF mode to determine the work load on the ADF.		
8 231 1	Large Volume	Selectable. Large copy jobs that cannot be loaded in the ADF at one time.	
8 231 2	SADF	Selectable. Feeding pages one by one through the ADF.	
8 231 3	Mixed Size	Selectable. Select “Mixed Sizes” on the operation panel.	
8 231 4	Custom Size	Selectable. Originals of non-standard size.	
8 231 5	Platen	Book mode. Raising the ADF and placing the original directly on the platen.	
8 231 6	Mixed 1side/ 2side	Simplex and Duplex mode.	

- If the scan mode is changed during the job, for example, if the user switches from ADF to Platen mode, the count is done for the last selected mode.
- The user cannot select mixed sizes or non-standard sizes with the fax application so if the original’s page sizes are mixed or non-standard, these are not counted.
- If the user selects “Mixed Sizes” for copying in the platen mode, the Mixed Size count is enabled.
- In the SADF mode if the user copies 1 page in platen mode and then copies 2 pages with SADF, the Platen count is 1 and the SADF count is 3.

WWW.SERVICE-MANUAL.NET

8 241	T:Scan PGS/Org	*CTL	[0 to 9999999/ **0** / 1]
	These SPs count the total number of scanned pages by original type for all jobs, regardless of which application was used.		
8 242	C:Scan PGS/Org	*CTL	[0 to 9999999/ **0** / 1]
	These SPs count the number of pages scanned by original type for Copy jobs.		
8 243	F:Scan PGS/Org	*CTL	[0 to 9999999/ **0** / 1]
	These SPs count the number of pages scanned by original type for Fax jobs.		
8 245	S:Scan PGS/Org	*CTL	[0 to 9999999/ **0** / 1]
	These SPs count the number of pages scanned by original type for Scan jobs.		
8 246	L:Scan PGS/Org	*CTL	[0 to 9999999/ **0** / 1]
	These SPs count the number of pages scanned and stored from within the document server mode screen at the operation panel, and with the Store File button from within the Copy mode screen		

	8 241	**8 242**	**8 243**	**8 245**	**8 246**
8 24x 1: Text	Yes	Yes	Yes	Yes	Yes
8 24x 2: Text/Photo	Yes	Yes	Yes	Yes	Yes
8 24x 3: Photo	Yes	Yes	Yes	Yes	Yes
8 24x 4: GenCopy, Pale	Yes	Yes	No	Yes	Yes
8 24x 5: Map	Yes	Yes	No	Yes	Yes
8 24x 6: Normal/Detail	Yes	No	Yes	No	No
8 24x 7: Fine/Super Fine	Yes	No	Yes	No	No
8 24x 8: Binary	Yes	No	No	Yes	No
8 24x 9: Grayscale	Yes	No	No	Yes	No

WWW.SERVICE-MANUAL.NET

8 24x 10: Color	Yes	No	No	Yes	No
8 24x 11: Other	Yes	Yes	Yes	Yes	Yes

- If the scan mode is changed during the job, for example, if the user switches from ADF to Platen mode, the count is done for the last selected mode.

8 251	T:Scan PGS/ImgEdt	*CTL	These SPs show how many times Image Edit features have been selected at the operation panel for each application. Some examples of these editing features are: ▪ Erase> Border ▪ Erase> Center ▪ Image Repeat ▪ Centering ▪ Positive/Negative [0 to 9999999/ **0** / 1] Note: The count totals the number of times the edit features have been used. A detailed breakdown of exactly which features have been used is not given.
8 252	C:Scan PGS/ImgEdt	*CTL	
8 255	S : Scan PGS/ImgEdr	*CTL	
8 256	L:Scan PGS/ImgEdt	*CTL	
8 257	O:Scan PGS/ImgEdt	*CTL	

The L: counter counts the number of pages stored from within the document server mode screen at the operation panel, and with the Store File button from within the Copy mode screen.

WWW.SERVICE-MANUAL.NET

8 261	T:Scan PGS/ColCr	*CTL	-
8 262	C:Scan PGS/ ColCr	*CTL	-
8 265	S:Scn PGS/Color	*CTL	-
8 266	L:Scn PGS/ColCr	*CTL	-
8 26x 1	Color Conversion	These SPs show how many times color creation features have been selected at the operation panel.	
8 26x 2	Color Erase		
8 26x 3	Background		
8 26x 4	Other		

8 281	T:Scan PGS/TWAIN	*CTL	These SPs count the number of pages scanned using a TWAIN driver. These counters reveal how the TWAIN driver is used for delivery functions. [0 to 9999999/ **0** / 1] **Note**: At the present time, these counters perform identical counts.
8 285	S:Scan PGS/TWAIN	*CTL	

8 291	T:Scan PGS/Stamp	*CTL	These SPs count the number of pages stamped with the stamp in the ADF unit. [0 to 9999999/ **0** / 1] The L: counter counts the number of pages stored from within the document server mode screen at the operation panel, and with the Store File button from within the Copy mode screen
8 293	F:Scan PGS/Stamp	*CTL	
8 295	S:Scan PGS/Stamp	*CTL	

8 301	T:Scan PGS/Size	*CTL	[0 to 9999999/ **0** / 1]
	These SPs count by size the total number of pages scanned by all applications. Use these totals to compare original page size (scanning) and output (printing) page size [SP 8-441].		

WWW.SERVICE-MANUAL.NET

8 302	C:Scan PGS/Size	*CTL	[0 to 9999999/ **0** / 1]
	These SPs count by size the total number of pages scanned by the Copy application. Use these totals to compare original page size (scanning) and output (printing) page size [SP 8-442].		
8 303	F:Scan PGS/Size	*CTL	[0 to 9999999/ **0** / 1]
	These SPs count by size the total number of pages scanned by the Fax application. Use these totals to compare original page size (scanning) and output page size [SP 8-443].		
8 305	S:Scan PGS/Size	*CTL	[0 to 9999999/ **0** / 1]
	These SPs count by size the total number of pages scanned by the Scan application. Use these totals to compare original page size (scanning) and output page size [SP 8-445].		
8 306	L:Scan PGS/Size	*CTL	[0 to 9999999/ **0** / 1]
	These SPs count by size the total number of pages scanned and stored from within the document server mode screen at the operation panel, and with the Store File button from within the Copy mode screen. Use these totals to compare original page size (scanning) and output page size [SP 8-446].		
8 30x 1	A3	-	
8 30x 2	A4		
8 30x 3	A5		
8 30x 4	B4		
8 30x 5	B5		
8 30x 6	DLT		
8 30x 7	LG		
8 30x 8	LT		
8 30x 9	HLT		
8 30x 10	Full Bleed		

WWW.SERVICE-MANUAL.NET

8 30x 254	Other (Standard)	
8 30x 255	Other (Custom)	

8 311	T:Scan PGS/Rez	*CTL	[0 to 9999999/ **0** / 1]
	These SPs count by resolution setting the total number of pages scanned by applications that can specify resolution settings.		
8 315	S: Scan PGS/Rez	*CTL	[0 to 9999999/ **0** / 1]
	These SPs count by resolution setting the total number of pages scanned by applications that can specify resolution settings. **Note**: At the present time, SP8-311 and SP8-315 perform identical counts.		
8 31x 1	1200dpi <		
8 31x 2	600dpi to 1199dpi		
8 31x 3	400dpi to 599dpi		
8 31x 4	200dpi to 399dpi		
8 31x 5	< 199dpi		

- Copy resolution settings are fixed so they are not counted.
- The Fax application does not allow finely-adjusted resolution settings so no count is done for the Fax application.

WWW.SERVICE-MANUAL.NET

8 381	T:Total PrtPGS	*CTL	These SPs count the number of pages printed by the customer. The counter for the application used for storing the pages increments. [0 to 9999999/ **0** / 1] The L: counter counts the number of pages stored from within the document server mode screen at the operation panel. Pages stored with the Store File button from within the Copy mode screen go to the C: counter.
8 382	C:Total PrtPGS	*CTL	
8 383	F:Total PrtPGS	*CTL	
8 384	P:Total PrtPGS	*CTL	
8 385	S:Total PrtPGS	*CTL	
8 386	L:Total PrtPGS	*CTL	
8 387	O:Total PrtPGS	*CTL	

- When the A3/DLT double count function is switched on with SP5104, 1 A3/DLT page is counted as 2.
- When several documents are merged for a print job, the number of pages stored are counted for the application that stored them.
- These counters are used primarily to calculate charges on use of the machine, so the following pages are not counted as printed pages:
  - Blank pages in a duplex printing job.
  - Blank pages inserted as document covers, chapter title sheets, and slip sheets.
  - Reports printed to confirm counts.
  - All reports done in the service mode (service summaries, engine maintenance reports, etc.)
  - Test prints for machine image adjustment.
  - Error notification reports.
  - Partially printed pages as the result of a copier jam.

WWW.SERVICE-MANUAL.NET

8 391	LSize PrtPGS	*CTL	[0 to 9999999/ **0** / 1]
	These SPs count pages printed on paper sizes A3/DLT and larger. **Note**: In addition to being displayed in the SMC Report, these counters are also displayed in the User Tools display on the copy machine.		

8 401	T:PrtPGS/LS	*CTL	These SPs count the number of pages printed from the document server. The counter for the application used to print the pages is incremented. The L: counter counts the number of jobs stored from within the document server mode screen at the operation panel. [0 to 9999999/ **0** / 1]
8 402	C:PrtPGS/LS	*CTL	
8 403	F:PrtPGS/LS	*CTL	
8 404	P:PrtPGS/LS	*CTL	
8 405	S:PrtPGS/LS	*CTL	
8 406	L:PrtPGS/LS	*CTL	

- Print jobs done with Web Image Monitor and Desk Top Binder are added to the L: count.
- Fax jobs done with Web Image Monitor and Desk Top Binder are added to the F: count.

8 411	Prints/Duplex	*CTL	This SP counts the amount of paper (front/back counted as 1 page) used for duplex printing. Last pages printed only on one side are not counted. [0 to 9999999/ **0** / 1]

8 421	T:PrtPGS/Dup Comb	*CTL	[0 to 9999999/ **0** / 1]
	These SPs count by binding and combine, and n-Up settings the number of pages processed for printing. This is the total for all applications.		
8 422	C:PrtPGS/Dup Comb	*CTL	[0 to 9999999/ **0** / 1]
	These SPs count by binding and combine, and n-Up settings the number of pages processed for printing by the copier application.		

WWW.SERVICE-MANUAL.NET

8 423	F:PrtPGS/Dup Comb		*CTL	[0 to 9999999/ **0** / 1]
	These SPs count by binding and combine, and n-Up settings the number of pages processed for printing by the fax application.			
8 424	P:PrtPGS/Dup Comb		*CTL	[0 to 9999999/ **0** / 1]
	These SPs count by binding and combine, and n-Up settings the number of pages processed for printing by the printer application.			
8 425	S:PrtPGS/Dup Comb		*CTL	[0 to 9999999/ **0** / 1]
	These SPs count by binding and combine, and n-Up settings the number of pages processed for printing by the scanner application.			
8 426	L:PrtPGS/Dup Comb		*CTL	[0 to 9999999/ **0** / 1]
	These SPs count by binding and combine, and n-Up settings the number of pages processed for printing from within the document server mode window at the operation panel.			
8 427	O:PrtPGS/Dup Comb		*CTL	[0 to 9999999/ **0** / 1]
	These SPs count by binding and combine, and n-Up settings the number of pages processed for printing by Other applications			
8 42x 1	Simplex> Duplex			
8 42x 2	Duplex> Duplex			
8 42x 3	Book> Duplex			
8 42x 4	Simplex Combine			
8 42x 5	Duplex Combine			
8 42x 6	2>	2 pages on 1 side (2-Up)		
8 42x 7	4>	4 pages on 1 side (4-Up)		
8 42x 8	6>	6 pages on 1 side (6-Up)		
8 42x 9	8>	8 pages on 1 side (8-Up)		
8 42x 10	9>	9 pages on 1 side (9-Up)		

WWW.SERVICE-MANUAL.NET

8 42x 11	16>	16 pages on 1 side (16-Up)		
8 42x 12	Booklet			
8 42x 13	Magazine			

- These counts (SP8 421 to SP8 427) are especially useful for customers who need to improve their compliance with ISO standards for the reduction of paper consumption.
- Pages that are only partially printed with the n-Up functions are counted as 1 page.
- Here is a summary of how the counters work for Booklet and Magazine modes:

Booklet			**Magazine**	
Original Pages	**Count**		**Original Pages**	**Count**
1	1		1	1
2	2		2	2
3	2		3	2
4	2		4	2
5	3		5	4
6	4		6	4
7	4		7	4
8	4		8	4

8 431	T:PrtPGS/ImgEdt	*CTL	[0 to 9999999/ **0** / 1]
	These SPs count the total number of pages output with the three features below, regardless of which application was used.		
8 432	C:PrtPGS/ImgEdt	*CTL	[0 to 9999999/ **0** / 1]
	These SPs count the total number of pages output with the three features below with the copy application.		
8 434	P:PrtPGS/ImgEdt	*CTL	[0 to 9999999/ **0** / 1]
	These SPs count the total number of pages output with the three features		

WWW.SERVICE-MANUAL.NET

	below with the print application.		
8 436	L:PrtPGS/ImgEdt	*CTL	[0 to 9999999/ **0** / 1]
	These SPs count the total number of pages output from within the document server mode window at the operation panel with the three features below.		
8 437	O:PrtPGS/ImgEdt	*CTL	[0 to 9999999/ **0** / 1]
	These SPs count the total number of pages output with the three features below with Other applications.		
8 43x 1	Cover/Slip Sheet	Total number of covers or slip sheets inserted. The count for a cover printed on both sides counts 2.	
8 43x 2	Series/Book	The number of pages printed in series (one side) or printed as a book with booklet right/left pagination.	
8 43x 3	User Stamp	The number of pages printed where stamps were applied, including page numbering and date stamping.	

8 441	T:PrtPGS/Ppr Size	*CTL	[0 to 9999999/ **0** / 1]
	These SPs count by print paper size the number of pages printed by all applications.		
8 442	C:PrtPGS/Ppr Size	*CTL	[0 to 9999999/ **0** / 1]
	These SPs count by print paper size the number of pages printed by the copy application.		
8 443	F:PrtPGS/Ppr Size	*CTL	[0 to 9999999/ **0** / 1]
	These SPs count by print paper size the number of pages printed by the fax application.		

WWW.SERVICE-MANUAL.NET

8 444	P:PrtPGS/Ppr Size	*CTL	[0 to 9999999/ **0** / 1]
	These SPs count by print paper size the number of pages printed by the printer application.		
8 445	S:PrtPGS/Ppr Size	*CTL	[0 to 9999999/ **0** / 1]
	These SPs count by print paper size the number of pages printed by the scanner application.		
8 446	L:PrtPGS/Ppr Size	*CTL	[0 to 9999999/ **0** / 1]
	These SPs count by print paper size the number of pages printed from within the document server mode window at the operation panel.		
8 447	O:PrtPGS/Ppr Size	*CTL	[0 to 9999999/ **0** / 1]
	These SPs count by print paper size the number of pages printed by Other applications.		
8 44x 1	A3		
8 44x 2	A4		
8 44x 3	A5		
8 44x 4	B4		
8 44x 5	B5		
8 44x 6	DLT		
8 44x 7	LG		
8 44x 8	LT		
8 44x 9	HLT		
8 44x 10	Full Bleed		
8 44x 254	Other (Standard)		
8 44x 255	Other (Custom)		

- These counters do not distinguish between LEF and SEF.

WWW.SERVICE-MANUAL.NET

8 451	PrtPGS/Ppr Tray	*CTL	[0 to 9999999/ **0** / 1]
	These SPs count the number of sheets fed from each paper feed station.		
8 451 1	Bypass Tray	Bypass Tray	
8 451 2	Tray 1	Copier	
8 451 3	Tray 2	Copier	
8 451 4	Tray 3	Paper Tray Unit (Option)	
8 451 5	Tray 4	Paper Tray Unit (Option)	
8 451 6	Tray 5	LCT (Option)	
8 451 7	Tray 6	Currently not used.	
8 451 8	Tray 7	Currently not used.	
8 451 9	Tray 8	Currently not used.	
8 451 10	Tray 9	Currently not used.	

8 461	T:PrtPGS/Ppr Type	*CTL	[0 to 9999999/ **0** / 1]
	These SPs count by paper type the number pages printed by all applications. ▪ These counters are not the same as the PM counter. The PM counter is based on feed timing to accurately measure the service life of the feed rollers. However, these counts are based on output timing. ▪ Blank sheets (covers, chapter covers, slip sheets) are also counted. ▪ During duplex printing, pages printed on both sides count as 1, and a page printed on one side counts as 1.		
8 462	C:PrtPGS/Ppr Type	*CTL	[0 to 9999999/ **0** / 1]
	These SPs count by paper type the number pages printed by the copy application.		
8 463	F:PrtPGS/Ppr Type	*CTL	[0 to 9999999/ **0** / 1]
	These SPs count by paper type the number pages printed by the fax application.		

WWW.SERVICE-MANUAL.NET

8 464	P:PrtPGS/Ppr Type	*CTL	[0 to 9999999/ **0** / 1]
	These SPs count by paper type the number pages printed by the printer application.		
8 466	L:PrtPGS/Ppr Type	*CTL	[0 to 9999999/ **0** / 1]
	These SPs count by paper type the number pages printed from within the document server mode window at the operation panel.		
8 46x 1	Normal		
8 46x 2	Recycled		
8 46x 3	Special		
8 46x 4	Thick		
8 46x 5	Normal (Back)		
8 46x 6	Thick (Back)		
8 46x 7	OHP		
8 46x 8	Other		

8 471	PrtPGS/Mag	*CTL	[0 to 9999999/ **0** / 1]
	These SPs count by magnification rate the number of pages printed.		
8 471 1	< 49%		
8 471 2	50% to 99%		
8 471 3	100%		
8 471 4	101% to 200%		
8 471 5	201% <		

- Counts are done for magnification adjusted for pages, not only on the operation panel but performed remotely with an external network application capable of performing magnification adjustment as well.
- Magnification adjustments done with printer drivers with PC applications such as Excel are also counted.

WWW.SERVICE-MANUAL.NET

- Magnification adjustments done for adjustments after they have been stored on the document server are not counted.
- Magnification adjustments performed automatically during Auto Reduce/Enlarge copying are counted.
- The magnification rates of blank cover sheets, slip sheets, etc. are automatically assigned a rate of 100%.

8 481	T:PrtPGS/TonSave	*CTL	
8 484	P:PrtPGS/TonSave	*CTL	
	These SPs count the number of pages printed with the Toner Save feature switched on. **Note**: These SPs return the same results as this SP is limited to the Print application. [0 to 9999999/ **0** / 1]		

8 491	T:PrtPGS/Col Mode	*CTL	These SPs count the number of pages printed in the Color Mode by each application.
8 492	C:PrtPGS/Col Mode	*CTL	
8 493	F:PrtPGS/Col Mode	*CTL	
8 496	L:PrtPGS/Col Mode	*CTL	
8 497	O:PrtPGS/Col Mode	*CTL	
8 49x 1	B/W		
8 49x 2	Single Color		
8 49x 3	Two Color		
8 49x 4	Full Color		

WWW.SERVICE-MANUAL.NET

8 501	T:PrtPGS/Col Mode	*CTL	These SPs count the number of pages printed in the Color Mode by the print application.
8 504	P:PrtPGS/Col Mode	*CTL	
8 507	O:PrtPGS/Col Mode	*CTL	
8 50x 1	B/W		
8 50x 2	Mono Color		
8 50x 3	Full Color		
8 50x 4	Single Color		
8 50x 5	Two Color		

8 511	T:PrtPGS/Emul		*CTL	[0 to 9999999/ **0** / 1]
	These SPs count by printer emulation mode the total number of pages printed.			
8 514	P:PrtPGS/Emul		*CTL	[0 to 9999999/ **0** / 1]
	These SPs count by printer emulation mode the total number of pages printed.			
8 514 1	RPCS			
8 514 2	RPDL			
8 514 3	PS3			
8 514 4	R98			
8 514 5	R16			
8 514 6	GL/GL2			
8 514 7	R55			
8 514 8	RTIFF			

WWW.SERVICE-MANUAL.NET

8 514 9	PDF			
8 514 10	PCL5e/5c			
8 514 11	PCL XL			
8 514 12	IPDL-C			
8 514 13	BM-Links	Japan Only		
8 514 14	Other			
8 514 15	IPDS			

- SP8 511 and SP8 514 return the same results as they are both limited to the Print application.
- Print jobs output to the document server are not counted.

8 521	T:PrtPGS/FIN	*CTL	[0 to 9999999 / **0** / 1]
	These SPs count by finishing mode the total number of pages printed by all applications.		
8 522	C:PrtPGS/FIN	*CTL	[0 to 9999999 / **0** / 1]
	These SPs count by finishing mode the total number of pages printed by the Copy application.		
8 523	F:PrtPGS/FIN	*CTL	[0 to 9999999 / **0** / 1]
	These SPs count by finishing mode the total number of pages printed by the Fax application. **NOTE**: Print finishing options for received faxes are currently not available.		
8 524	P:PrtPGS/FIN	*CTL	[0 to 9999999 / **0** / 1]
	These SPs count by finishing mode the total number of pages printed by the Print application.		
8 525	S:PrtPGS/FIN	*CTL	[0 to 9999999 / **0** / 1]
	These SPs count by finishing mode the total number of pages printed by the Scanner application.		

WWW.SERVICE-MANUAL.NET

8 526	L:PrtPGS/FIN	*CTL	[0 to 9999999 / **0** / 1]
	These SPs count by finishing mode the total number of pages printed from within the document server mode window at the operation panel.		
8 52x 1	Sort		
8 52x 2	Stack		
8 52x 3	Staple		
8 52x 4	Booklet		
8 52x 5	Z-Fold		
8 52x 6	Punch		
8 52x 7	Other		
8 52x 8	Inside-Fold		
8 52x 9	Three-IN-Fold		
8 52x 10	Three-OUT-Fold		
8 52x 11	Four-Fold		
8 52x 12	KANNON-Fold		
8 52x 13	Perfect-Bind		
8 52x 14	Ring-Bind		

Note

- If stapling is selected for finishing and the stack is too large for stapling, the unstapled pages are still counted.
- The counts for staple finishing are based on output to the staple tray, so jam recoveries are counted.

WWW.SERVICE-MANUAL.NET

8 531	Staples	*CTL	This SP counts the amount of staples used by the machine. [0 to 9999999 / **0** / 1]

8 581	T:Counter	*CTL	[0 to 9999999 / **0** / 1]
	These SPs count the total output broken down by color output, regardless of the application used. In addition to being displayed in the SMC Report, these counters are also displayed in the User Tools display on the copy machine.		
8 581 1	Total		
8 581 2	Total: Full Color		
8 581 3	B&W/Single Color		
8 581 4	Development: CMY		
8 581 5	Development: K		
8 581 6	Copy: Color		
8 581 7	Copy: B/W		
8 581 8	Print: Color		
8 581 9	Print: B/W		
8 581 10	Total: Color		
8 581 11	Total: B/W		
8 581 12	Full Color: A3		
8 581 13	Full Color: B4 JIS or Smaller		
8 581 14	Full Color Print		
8 581 15	Mono Color Print		

WWW.SERVICE-MANUAL.NET

8 581 16	Full Color GPC
8 581 17	Twin Colour Mode Print
8 581 18	Full Colour Print (Twin)
8 581 19	Mono Colour Print (Twin)
8 581 20	Full Colour Total (CV)
8 581 21	Mono Colour Total (CV)
8 581 22	Full Colour Print (CV)

8 582	C:Counter	*CTL	[0 to 9999999/ **0** / 1]
	These SPs count the total output of the copy application broken down by color output.		
8 582 1	B/W		
8 582 2	Single Color		
8 582 3	Two Color		
8 582 4	Full Color		

8 583	F:Counter	*CTL	[0 to 9999999/ **0** / 1]
	These SPs count the total output of the fax application broken down by color output.		
8 583 1	B/W		
8 583 2	Single Color		

WWW.SERVICE-MANUAL.NET

8 584	P:Counter	*CTL	[0 to 9999999/ **0** / 1]
	These SPs count the total output of the print application broken down by color output.		
8 584 1	B/W		
8 584 2	Mono Color		
8 584 3	Full Color		
8 584 4	Single Color		
8 584 5	Two Color		

8 586	L:Counter	*CTL	[0 to 9999999/ **0** / 1]
	These SPs count the total output of the local storage broken down by color output.		
8 582 1	B/W		
8 582 2	Single Color		
8 582 3	Two Color		
8 582 4	Full Color		

8 591	O:Counter	*CTL	[0 to 9999999/ **0** / 1]
	These SPs count the totals for A3/DLT paper use, number of duplex pages printed, and the number of staples used. These totals are for Other (O:) applications only.		
8 591 1	A3/DLT	-	
8 591 2	Duplex		

WWW.SERVICE-MANUAL.NET

8 601	Coverage Counter	*CTL	[0 to 9999999/ **0** / 1]
	These SPs count the total coverage for each color and the total printout pages for each printing mode.		
8 601 1	B/W	-	
8 601 2	Color		
8 601 11	B/W Printing Pages		
8 601 12	Color Printing Pages		
8 601 21	Coverage Counter 1		
8 601 22	Coverage Counter 2		
8 601 23	Coverage Counter 3		

8 617	SDK Apli Counter	*CTL	[0 to 9999999/ **0** / 1]
	These SPs count the total printout pages for each SDK applicaion.		
8 617 1	SDK-1	-	
8 617 2	SDK-2		
8 617 3	SDK-3		
8 617 4	SDK-4		
8 617 5	SDK-5		
8 617 6	SDK-6		

WWW.SERVICE-MANUAL.NET

8 631	T:FAX TX PGS	*CTL	[0 to 9999999/ **0** / 1]
	These SPs count by color mode the number of pages sent by fax to a telephone number.		
8 633	F:FAX TX PGS	*CTL	[0 to 9999999/ **0** / 1]
	These SPs count by color mode the number of pages sent by fax to a telephone number.		
8 63x 1	B/W		
8 63x 2	Color		

- If a document has color and black-and-white pages mixed, the pages are counted separately as B/W or Color.
- At the present time, this feature is provided for the Fax application only so SP8631 and SP8633 are the same.
- The counts include error pages.
- If a document is sent to more than one destination with a Group transmission, the count is done for each destination.
- Polling transmissions are counted but polling RX are not.
- Relay, memory, and confidential mailbox transmissions and are counted for each destination.

WWW.SERVICE-MANUAL.NET

8 641	T:IFAX TX PGS	*CTL	[0 to 9999999/ **0** / 1]
	These SPs count by color mode the number of pages sent by fax to as fax images using I-Fax.		
8 643	F:IFAX TX PGS	*CTL	[0 to 9999999/ **0** / 1]
	These SPs count by color mode the number of pages sent by Fax as fax images using I-Fax.		
8 64x 1	B/W		
8 64x 2	Color		

- If a document has color and black-and-white pages mixed, the pages are counted separately as B/W or Color.
- At the present time, this feature is provided for the Fax application only so SP8641 and SP8643 are the same.
- The counts include error pages.
- If a document is sent to more than one destination with a Group transmission, the count is done for each destination.
- Polling transmissions are counted but polling RX are not.
- Relay, memory, and confidential mailbox transmissions and are counted for each destination.

WWW.SERVICE-MANUAL.NET

8 651	T:S-to-Email PGS	*CTL	[0 to 9999999/ **0** / 1]
	These SPs count by color mode the total number of pages attached to an e-mail for both the Scan and document server applications.		
8 655	S:S-to-Email PGS	*CTL	[0 to 9999999/ **0** / 1]
	These SPs count by color mode the total number of pages attached to an e-mail for the Scan application only.		
8 65x 1	B/W		
8 65x 2	Color		

Note

- The count for B/W and Color pages is done after the document is stored on the HDD. If the job is cancelled before it is stored, the pages are not counted.
- If Scan-to-Email is used to send a 10-page document to 5 addresses, the count is 10 (the pages are sent to the same SMTP server together).
- If Scan-to-PC is used to send a 10-page document to 5 folders, the count is 50 (the document is sent to each destination of the SMB/FTP server).
- Due to restrictions on some devices, if Scan-to-Email is used to send a 10-page document to a large number of destinations, the count may be divided and counted separately. For example, if a 10-page document is sent to 200 addresses, the count is 10 for the first 100 destinations and the count is also 10 for the second 100 destinations, for a total of 20.).

WWW.SERVICE-MANUAL.NET

8 661	T:Deliv PGS/Svr	*CTL	[0 to 9999999/ **0** / 1]
	These SPs count by color mode the total number of pages sent to a Scan Router server by both Scan and LS applications.		
8 665	S:Deliv PGS/Svr	*CTL	[0 to 9999999/ **0** / 1]
	These SPs count by color mode the total number of pages sent to a Scan Router server by the Scan application.		
8 66x 1	B/W		
8 66x 2	Color		

Note

- The B/W and Color counts are done after the document is stored on the HDD of the Scan Router server.
- If the job is canceled before storage on the Scan Router server finishes, the counts are not done.
- The count is executed even if regardless of confirmation of the arrival at the Scan Router server.

8 671	T:Deliv PGS/PC	*CTL	[0 to 9999999/ **0** / 1]
	These SPs count by color mode the total number of pages sent to a folder on a PC (Scan-to-PC) with the Scan and LS applications.		
8 675	S: Deliv PGS/PC	*CTL	[0 to 9999999/ **0** / 1]
	These SPs count by color mode the total number of pages sent with Scan-to-PC with the Scan application.		
8 67x 1	B/W		
8 67x 2	Color		

WWW.SERVICE-MANUAL.NET

8 681	T:PCFAX TXPGS	*CTL	These SPs count the number of pages sent by PC Fax. These SPs are provided for the Fax application only, so the counts for SP8 681 and SP8 683 are the same. [0 to 9999999/ **0** / 1]
8 683	F:PCFAX TXPGS	*CTL	

- This counts pages sent from a PC using a PC fax application, from the PC through the copier to the destination.
- When sending the same message to more than one place using broadcasting, the pages are only counted once. (For example, a 10-page fax is sent to location A and location B. The counter goes up by 10, not 20.)

8 691	T:TX PGS/LS	*CTL	These SPs count the number of pages sent from the document server. The counter for the application that was used to store the pages is incremented. [0 to 9999999/ **0** / 1] The L: counter counts the number of pages stored from within the document server mode screen at the operation panel. Pages stored with the Store File button from within the Copy mode screen go to the C: counter.
8 692	C:TX PGS/LS	*CTL	
8 693	F:TX PGS/LS	*CTL	
8 694	P:TX PGS/LS	*CTL	
8 695	S:TX PGS/LS	*CTL	
8 696	L:TX PGS/LS	*CTL	

Note

- Print jobs done with Web Image Monitor and Desk Top Binder are added to the count.
- If several documents are merged for sending, the number of pages stored are counted for the application that stored them.
- When several documents are sent by a Fax broadcast, the F: count is done for the number of pages sent to each destination.

WWW.SERVICE-MANUAL.NET

8 701	TX PGS/Port	*CTL	[0 to 9999999/ **0** / 1]
	These SPs count the number of pages sent by the physical port used to send them. For example, if a 3-page original is sent to 4 destinations via ISDN G4, the count for ISDN (G3, G4) is 12.		
8 701 1	PSTN-1		
8 701 2	PSTN-2		
8 701 3	PSTN-3		
8 701 4	ISDN (G3,G4)		
8 701 5	Network		

8 711	T:Scan PGS/Comp	*CTL	[0 to 9999999/ **0** / 1]
8 715	S:Scan PGS/Comp	*CTL	[0 to 9999999/ **0** / 1]
	These SPs count the number of pages sent by each compression mode.		
8 715 1	JPEG/JPEG2000		
8 715 2	TIFF(Multi/Single)		
8 715 3	PDF		
8 715 4	Other		
8 715 5	PDF/Comp		

8 721	T:Deliv PGS/WSD	*CTL	[0 to 9999999/ **0** / 1]
8 725	S: Dvliv PGS/WSD	*CTL	
	These SPs count the number of pages scanned by each scanner mode.		
x 1	B/W	-	
x 2	Color	-	

WWW.SERVICE-MANUAL.NET

8 731	T:Scan PGS/Media	*CTL	[0 to 9999999/ **0** / 1]
8 735	S:Scan PGS/Media	*CTL	
	These SPs count the number of pages scanned and saved in a meia by each scanner mode.		
x 1	B/W	-	
x 2	Color	-	

8 741	RX PGS/Port	*CTL	[0 to 9999999/ **0** / 1]
	These SPs count the number of pages received by the physical port used to receive them.		
8 741 1	PSTN-1	-	
8 741 2	PSTN-2	-	
8 741 3	PSTN-3	-	
8 741 4	ISDN (G3,G4)	-	
8 741 5	Network	-	

8 771	Dev Counter	*CTL	[0 to 9999999/ **0** / 1]
	These SPs count the frequency of use (number of rotations of the development rollers) for black and other color toners.		
8 771 1	Total		
8 771 2	K		
8 771 3	Y		
8 771 4	M		
8 771 5	C		

WWW.SERVICE-MANUAL.NET

8 781	Toner_Bottle_Info.	*ENG	[0 to 9999999/ **0** / 1]
	These SPs display the number of already replaced toner bottles. **NOTE:** Currently, the data in SP7-833-011 through 014 and the data in SP8-781-001 through 004 are the same.		
8 781 1	Toner: BK	The number of black-toner bottles	
8 781 2	Toner: Y	The number of yellow-toner bottles	
8 781 3	Toner: M	The number of magenta-toner bottles	
8 781 4	Toner: C	The number of cyan-toner bottles	

8 791	LS Memory Remain	*CTL	This SP displays the percent of space available on the document server for storing documents. [0 to 100 / **0** / 1]

8 801	Toner Remain	*CTL	[0 to 100/ **0** / 1]
	These SPs display the percent of toner remaining for each color. This SP allows the user to check the toner supply at any time. **Note:** This precise method of measuring remaining toner supply (1% steps) is better than other machines in the market that can only measure in increments of 10 (10% steps).		
8 801 1	K		
8 801 2	Y		
8 801 3	M		
8 801 4	C		

WWW.SERVICE-MANUAL.NET

8 851	CVr Cnt: 0-10%	*ENG	[0 to 9999999/ **0** / 1]
	These SPs display the number of scanned sheets on which the coverage of each color is from 0% to 10%.		
8 851 11	0 to 2%: BK	8 851 31	5 to 7%: BK
8 851 12	0 to 2%: Y	8 851 32	5 to 7%: Y
8 851 13	0 to 2%: M	8 851 33	5 to 7%: M
8 851 14	0 to 2%: C	8 851 34	5 to 7%: C
8 851 21	3 to 4%: BK	8 851 41	8 to 10%: BK
8 851 22	3 to 4%: Y	8 851 42	8 to 10%: Y
8 851 23	3 to 4%: M	8 851 43	8 to 10%: M
8 851 24	3 to 4%: C	8 851 44	8 to 10%: C

8 861	CVr Cnt: 11-20%	*ENG	[0 to 9999999/ **0** / 1]
	These SPs display the number of scanned sheets on which the coverage of each color is from 11% to 20%.		
8 861 1	BK		
8 861 2	Y		
8 861 3	M		
8 861 4	C		

WWW.SERVICE-MANUAL.NET

8 871	CVr Cnt: 21-30%	*ENG	[0 to 9999999/ **0** / 1]
	These SPs display the number of scanned sheets on which the coverage of each color is from 21% to 30%.		
8 871 1	BK		
8 871 2	Y		
8 871 3	M		
8 871 4	C		

8 881	CVr Cnt: 31%-	*ENG	[0 to 9999999/ **0** / 1]
	These SPs display the number of scanned sheets on which the coverage of each color is 31% or higher.		
8 881 1	BK		
8 881 2	Y		
8 881 3	M		
8 881 4	C		

8 891	Page/Toner Bottle	*ENG	[0 to 9999999/ **0** / 1]
	These SPs display the amount of the remaining current toner for each color.		
8 891 1	BK		
8 891 2	Y		
8 891 3	M		
8 891 4	C		

WWW.SERVICE-MANUAL.NET

8 901	Page/Toner_prev1	*ENG	[0 to 9999999/ **0** / 1]
	These SPs display the amount of the remaining previous toner for each color.		
8 901 1	BK		
8 901 2	Y		
8 901 3	M		
8 901 4	C		

8 911	Page/Toner_prev2	*ENG	[0 to 9999999/ **0** / 1]
	These SPs display the amount of the remaining 2nd previous toner for each color.		
8 911 1	BK		
8 911 2	Y		
8 911 3	M		
8 911 4	C		

WWW.SERVICE-MANUAL.NET

8 921	Cvr Cnt/Total	*CTL	[0 to 9999999/ **0** / 1]
	Displays the total coverage and total printout number for each color.		
8 921 1	Coverage (%) Bk		
8 921 2	Coverage (%) Y		
8 921 3	Coverage (%) M		
8 921 4	Coverage (%) C		
8 921 11	Coverage /P: Bk		
8 921 12	Coverage /P: Y		
8 921 13	Coverage /P: M		
8 921 14	Coverage /P: C		

8 941	Machine Status	*CTL	[0 to 9999999/ **0** / 1]
	These SPs count the amount of time the machine spends in each operation mode. These SPs are useful for customers who need to investigate machine operation for improvement in their compliance with ISO Standards.		
8 941 1	Operation Time	Engine operation time. Does not include time while controller is saving data to HDD (while engine is not operating).	
8 941 2	Standby Time	Engine not operating. Includes time while controller saves data to HDD. Does not include time spent in Energy Save, Low Power, or Off modes.	
8 941 3	Energy Save Time	Includes time while the machine is performing background printing.	

WWW.SERVICE-MANUAL.NET

8 941 4	Low Power Time	Includes time in Energy Save mode with Engine on. Includes time while machine is performing background printing.
8 941 5	Off Mode Time	Includes time while machine is performing background printing. Does not include time machine remains powered off with the power switches.
8 941 6	SC	Total time when SC errors have been staying.
8 941 7	PrtJam	Total time when paper jams have been staying during printing.
8 941 8	OrgJam	Total time when original jams have been staying during scanning.
8 941 9	Supply PM Unit End	Total time when toner end has been staying

8 951	AddBook Register	*CTL		
	These SPs count the number of events when the machine manages data registration.			
8 951 1	User Code/User ID	User code registrations.	[0 to 9999999/ **0** / 1]	
8 951 2	Mail Address	Mail address registrations.		
8 951 3	Fax Destination	Fax destination registrations.		
8 951 4	Group	Group destination registrations.		
8 951 5	Transfer Request	Fax relay destination registrations for relay TX.		
8 951 6	F-Code	F-Code box registrations.		

WWW.SERVICE-MANUAL.NET

8 951 7	Copy Program	Copy application registrations with the Program (job settings) feature.	[0 to 255 / **0** / 255]
8 951 8	Fax Program	Fax application registrations with the Program (job settings) feature.	
8 951 9	Printer Program	Printer application registrations with the Program (job settings) feature.	
8 951 10	Scanner Program	Scanner application registrations with the Program (job settings) feature.	

8 999	Admin. Counter List	*CTL	[0 to 9999999/ **0** / 1]
	Displays the total coverage and total printout number for each color.		
8 999 1	Total		
8 999 2	Copy: Full Color		
8 999 3	Copy: BW		
8 999 4	Copy: Single Color		
8 999 5	Copy: Two Color		
8 999 6	Printer Full Color		
8 999 7	Printer BW		
8 999 8	Printer Single Color		
8 999 9	Printer Two Color		
8 999 10	Fax Print: BW		

WWW.SERVICE-MANUAL.NET

8 999 12	A3/DLT	
8 999 13	Duplex	
8 999 14	Coverage: Color (%)	
8 999 15	Coverage: BW (%)	
8 999 16	Coverage: Color Print Page (%)	
8 999 17	Coverage: BW Print Page (%)	
8 999 101	Transmission Total: Color	
8 999 102	Transmission Total: BW	
8 999 103	FAX Transmission	
8 999 104	Scanner Transmission: Color	
8 999 105	Scanner Transmission: BW	

WWW.SERVICE-MANUAL.NET

3.9 INPUT AND OUTPUT CHECK

3.9.1 INPUT CHECK TABLE

When entering the Input Check mode, 8 digits display the result for a section. Each digit corresponds to a different device as shown in the table.

Bit No.	**7**	**6**	**5**	**4**	**3**	**2**	**1**	**0**
Result	0 or 1	0 or 1	0 or 1	0 or 1	0 or 1	0 or 1	0 or 1	0 or 1

Copier

5803	**Description**	**Reading**	
		0	**1**
5803 1	2nd Tray Size Detection	See table 2 following this table.	
5803 2	1st Tray Set Detection	Set	Not set
5803 3	1st Tray Paper Height Sensor1	See table 1 following this table.	
5803 4	1st Tray Paper Height Sensor2	See table 1 following this table.	
5803 5	2nd Tray Paper Height Sensor1	See table 1 following this table.	
5803 6	2nd Tray Paper Height Sensor2	See table 1 following this table.	
5803 7	1st Tray Paper End Detection	No paper	Paper remaining
5803 8	2nd Tray Paper End Detection	No paper	Paper remaining
5803 9	1st Tray Upper Limit Sensor	Not upper limit	Upper limit
5803 10	2nd Tray Upper Limit Sensor	Not upper limit	Upper limit
5803 11	Bypass Paper Width Detection	See table 3 following this table.	
5803 12	Bypass Paper End Detection	No paper	Paper remaining
5803 13	Bypass Paper Length Detection	See table 3 following this table.	

WWW.SERVICE-MANUAL.NET

5803 14	1st Paper Feed Sensor	Paper detected	Paper not detected
5803 15	2nd Paper Feed Sensor	Paper detected	Paper not detected
5803 16	Exit Sensor	Paper detected	Paper not detected
5803 17	Tray Full Exit Sensor	Paper not full	Paper full
5803 18	Fusing Exit Sensor	Paper not detected	Paper detected
5803 19	Fusing Entrance Sensor	Paper detected	Paper not detected
5803 20	1st Feed Sensor	Paper detected	Paper not detected
5803 21	2nd Feed Sensor	Paper detected	Paper not detected
5803 22	Duplex Exit Sensor	Paper detected	Paper not detected
5803 23	Registration Sensor	Paper detected	Paper not detected
5803 24	Duplex Entrance Sensor	Paper detected	Paper not detected
5803 25	Junction Sensor	Paper detected	Paper not detected
5803 26	2nd Tray Set Detection	Set	Not set
5803 30	Toner End Sensor: Bk	Toner end	Toner remaining
5803 31	Toner End Sensor: M	Toner end	Toner remaining

WWW.SERVICE-MANUAL.NET

5803 32	Toner End Sensor: C	Toner end	Toner remaining
5803 33	Toner End Sensor: Y	Toner end	Toner remaining
5803 34	Drum Phase Sensor: Bk	Actuator not detected	Actuator detected
5803 35	Drum Phase Sensor: M	Actuator not detected	Actuator detected
5803 36	Drum Phase Sensor: C	Actuator not detected	Actuator detected
5803 37	Drum Phase Sensor: Y	Actuator not detected	Actuator detected
5803 38	Interlock Release Detection 1	Front door open	Front door closed
5803 39	Interlock Release Detection 2	Front door open	Front door closed
5803 40	Right Door	Closed	Open
5803 41	Duplex Cover	Closed	Open
5803 42	Toner Collection Bottle Set	Set	Not set
5803 43	Toner Collection Full Sensor	Not full	Full
5803 46	ITB New Unit Detection	Not new	New
5803 49	Duplex Fan: Lock	Normal	Lock
5803 50	Airflow Fan: Front: Lock	Normal	Lock
5803 51	Airflow Fan: Rear: Lock	Normal	Lock
5803 52	Fusing Exit Fan: Lock	Normal	Lock
5803 53	2nd Duct Fan: Lock	Normal	Lock

WWW.SERVICE-MANUAL.NET

5803 54	3rd Duct Fan: Lock	Normal	Lock
5803 55	Paper Exit Fan:Lock	Normal	Lock
5803 56	Fusing Coil Fan: Lock	Normal	Lock
5803 57	IH Power Supply Cooling Fan: Lock	Normal	Lock
5803 58	Airflow Fan: Middle 1: Lock	Normal	Lock
5803 59	Airflow Fan: Middle 2: Lock	Normal	Lock
5803 60	ITB Contact Motor Position	Not contact	Contact
5803 61	Paper Transfer Contact Motor Position	Not contact	Contact
5803 62	Toner Relay Motor: Lock	Normal	Lock
5803 63	ITB Drive Motor: Lock	Normal	Lock
5803 64	K Drum/Development Drive Motor: Lock	Normal	Lock
5803 65	M Drum/Development Drive Motor: Lock	Normal	Lock
5803 66	C Drum/Development Drive Motor: Lock	Normal	Lock
5803 67	Y Drum/Development Drive Motor: Lock	Normal	Lock
5803 68	Fusing Exit Motor:Lock	Normal	Lock
5803 80	HVPS:TTS:SC Detection	SC detected	No SC
5803 81	HVPS:CB:SC Detection	SC detected	No SC
5803 82	HVPS:D:SC Detection	SC detected	No SC

WWW.SERVICE-MANUAL.NET

5803 83	Fusing Destination Detection: DOM (Dom)	Set	Not set
5803 84	Fusing Destination Detection: NA	Set	Not set
5803 87	Fusing New Unit Detection	New	Not new
5803 90	Zero-cross Signal	-	-
5803 91	Fusing Rotation Sensor	Actuator not detected	Actuator detected
5803 92	Fusing Pressure Release Sensor	Not contact	Contact
5803 94	GAVD Open/Close Detection	Closed (LD5V ON)	Open (LD5V OFF)
5803 100	Keycard: Set	Set	Not set
5803 101	Mechanical Counter: Set	Set	Not set
5803 102	Mechanical Counter FC: Set	Set	Not set
5803 103	Key Counter: Set	Set	Not set
5803 110	IOB Version	-	-
5803 200	Scanner HP Sensor	Not HP	HP
5803 201	Platen Cover Sensor	Open	Closed

WWW.SERVICE-MANUAL.NET

Table 1: Paper Height Sensor

0: Deactivated, 1: Activated (actuator inside sensor)

Remaining paper	Paper height sensor 1	Paper height sensor 2
Full	0	0
Nearly full	1	0
Near end	1	1
Almost empty	0	1

WWW.SERVICE-MANUAL.NET

Table 2: Paper Size Switch (Tray 2)

Switch 1 is used for tray set detection.

0: Pushed, 1: Not pushed

Models		Switch Location		
North America	**Europe/Asia**	**4 (bit0)**	**3 (bit1)**	**2 (bit2)**
11" x 17" SEF*1 (A3 SEF)	A3 SEF*1 (11" x 17" SEF)	0	0	1
8.5" x 14" SEF*2 (B4 SEF)	B4 SEF*2 (8.5" x 14" SEF)	0	0	0
A4 SEF	A4 SEF	1	1	0
8.5" x 11" SEF	8.5" x 11" SEF	1	1	1
B5 SEF	B5 SEF	0	1	1
11" x 81/2" LEF*3 (A4 LEF)	A4 LEF*3 (11" x 81/2" LEF)	1	0	0
10.5" x 7.25" LEF*4 (B5 LEF)	B5 LEF*4 (10.5" x 7.25" LEF)	0	1	0
A5 LEF	A5 LEF	1	0	1

*1: The machine detects either 11" x 17" SEF or A3 SEF, depending on the setting of SP 5-181-003.

*2: The machine detects either 8.5" x 14" SEF or B4 SEF, depending on the setting of SP 5-181-004.

*3: The machine detects either 11" x 81/2" LEF or A4 LEF, depending on the setting of SP 5-181-002.

*4: The machine detects either B5 LEF or 10.5" x 7.25" LEF, depending on the setting of SP 5-181-005.

WWW.SERVICE-MANUAL.NET

Table 3: Paper Size (By-pass Table)

0: ON, 1: OFF

By-pass Paper Size Sensor				Length Sensor	NA	EU/ASIA
bit3	Bit2	Bit1	Bit0			
1	1	1	1	1	HLT SEF	A6 SEF
0	1	1	1	1	HLT SEF	A6 SEF
0	0	1	1	1	HLT SEF	A5 SEF
1	0	1	1	1	HLT SEF	A5 SEF
1	0	0	1	0	LT/LG SEF*1	A4 SEF
1	0	0	1	1	LT/LG SEF*1	A5 LEF
1	1	0	1	0	LT/LG SEF*1	A4 SEF
1	1	0	1	1	LT/LG SEF*1	A5 LEF
1	1	0	0	0	DLT SEF	A3 SEF
1	1	0	0	1	LT LEF	A4 LEF
1	1	1	0	0	DLT SEF	A3 SEF
1	1	1	0	1	LT LEF	A4 LEF

*1: The paper size (LT or LG) can be selected with SP1-007-001.

WWW.SERVICE-MANUAL.NET

ADF (D540)

6007	Description	Reading	
		0	1
6007 1	Original Length 1 (B5 Detection Sensor)	Paper not detected	Paper detected
6007 2	Original Length 2 (A4 Detection Sensor)	Paper not detected	Paper detected
6007 3	Original Length 3 (LG Detection Sensor)	Paper not detected	Paper detected
6007 4	Original Width 1	Paper not detected	Paper detected
6007 5	Original Width 2	Paper not detected	Paper detected
6007 6	Original Width 3	Paper not detected	Paper detected
6007 7	Original Width 4	Paper not detected	Paper detected
6007 8	Original Width 5	Paper not detected	Paper detected
6007 9	Original Detection	Paper not detected	Paper detected
6007 10	Separation Sensor	Paper not detected	Paper detected
6007 11	Skew Correction	Paper not detected	Paper detected
6007 12	Scan Entrance Secsor	Paper not detected	Paper detected
6007 13	Registration Sensor	Paper not	Paper detected

WWW.SERVICE-MANUAL.NET

		detected	
6007 14	Exit Sensor	Paper not detected	Paper detected
6007 15	Feed Cover Sensor	ADF cover close	ADF cover open
6007 16	Lift Up Sensor	ADF cover close	ADF cover open
6007 17	Inverter Sensor	Paper not detected	Paper detected
6007 18	Pick-Up Roller HP Sensor	Not HP	HP
6007 19	Original Set HP Sensor	Original not detected	Original detected
6007 23	Rear Edge Detection (Not used)	-	-

WWW.SERVICE-MANUAL.NET

2000/3000-Sheet (Booklet) Finisher (B804, B805)

6140	Bit	Description	Reading	
			0	1
6140 1	Entrance Sensor		Paper not detected	Paper detected
6140 2	Proof Exit Sensor		Paper not detected	Paper detected
6140 3	Proof Full Detection Sensor		Not Full	Full
6140 4	Trailing Edge Detection: Shift		Paper not detected*1	Paper detected*1
6140 5	Staple Exit Sensor		Paper not detected	Paper detected
6140 6	Shift HP Sensor		Not HP	HP
6140 7	Shift Exit Sensor		Paper not detected	Paper detected
6140 8	Exit Guide Plate HP Sensor		Not HP	HP
6140 9	Paper Detection Sensor: Staple		Paper not detected	Paper detected
6140 10	Paper Detection Sensor: Shift		Paper not detected	Paper detected
6140 11	Paper Full Sensor: 2000-Sheet		Not Full	Full
6140 12	Oscillating Back Roller HP Sensor		Not HP	HP
6140 13	Jogger HP Sensor		Not HP	HP
6140 14	Exit Junction Gate HP Sensor		HP	Not HP
6140 15	Staple Tray Paper Sensor		Paper not detected	Paper detected
6140 16	Staple Moving HP Sensor		Not HP	HP

WWW.SERVICE-MANUAL.NET

6140 17	Skew HP Sensor	Not HP	HP
6140 18	Limit SW	Not Limit	Limit
6140 19	DOOR SW	Closed	Open
6140 20	Stapler 1 Rotation	Not HP	HP
6140 21	Staple Detection	Staple not detected	Staple detected
6140 22	Staple Leading Edge Detection	Staple not detected	Staple detected
6140 23	Punch Moving HP Sensor	Not HP	HP
6140 24	Punch Registration HP Sensor	Not HP	HP
6140 25	Punch Registratioin Detection Sensor	Paper not detected	Paper detected
6140 26	Punch Chad Full Sensor	Not Full	Full
6140 27	Punch HP	Not HP	HP
6140 28	Punch Selection DIPSW 1	See *[1]	
6140 29	Punch Selection DIPSW 2	See *[1]	
6140 30	Stack Junction Gate Open/Closed HP Sensor	Not HP	HP
6140 31	Leading Edge Detection Sensor	Paper not detected	Paper detected
6140 32	Drive Roller HP Sensor	Not HP	HP
6140 33	Arrival Sensor	Paper not detected	Paper detected
6140 34	Rear Edge Fence HP Sensor	Not HP	HP
6140 35	Folder Cam HP Sensor	Not HP	HP
6140 36	Folder Plate HP Sensor	Not HP	HP
6140 37	Folder Pass Sensor	Paper not	Paper detected

WWW.SERVICE-MANUAL.NET

		detected	
6140 38	Saddle Full Sensor: Front	Paper not detected*2	Paper detected*2
6140 39	Saddle Full Sensor: Rear	Paper not detected*2	Paper detected*2
6140 40	Saddle Stitch Stapler 1 Rotation: Front	Not HP	HP
6140 41	Saddle Stitch Detection: Front	Staple not detected	Staple detected
6140 42	Saddle Stitch Leading Edge Detection: Front	Staple not detected	Staple detected
6140 43	Saddle Stitch Stapler 1 Rotation: Rear	Not HP	HP
6140 44	Saddle Stitch Detection: Rear	Staple not detected	Staple detected
6140 45	Saddle Stitch Leading Edge Detection: Rear	Staple not detected	Staple detected
6140 46	Full Sensor: 3000-Sheet	Not Full	Full

*1: Combination of DIP SW 1 and SW 2

DIP SW 1	DIP SW 2	Punch Type
0	0	Japan
1	0	Europe
0	1	North America
1	1	North Europe

*2: Please refer to "Lower Tray (B804 Only)" in the Service Manual for the "2000/3000 (Booklet) Finisher".

WWW.SERVICE-MANUAL.NET

1000-Sheet Finisher (B408)

6139	Description	Reading	
		0	1
6139 1	Entrance Sensor	Paper detected	Paper not detected
6139 2	Shift Exit Sensor (Lower Tray Exit Sensor)	Paper not detected	Paper detected
6139 3	Staple Entrance Sensor (Stapler Tray Entrance Sensor)	Paper detected	Paper not detected
6139 4	Staple Moving HP Sensor (Stapler HP Sensor)	Not home position	Home position
6139 5	Jogger HP Sensor (Jogger Fence HP Sensor)	Not home position	Home position
6139 6	Stack Feed-out Belt HP Sensor	Home position	Not home position
6139 7	Staple Tray Paper Sensor	Paper not detected	Paper detected
6139 8	Staple Rotation Sensor (Staple Rotation HP Sensor)	Not home position	Home position
6139 9	Staple Sensor	Staple detected	Staple not detected
6139 10	Staple READY Detection	Staple detected	Staple not detected
6139 11	Exit Guide Plate HP (Exit Guide Plate HP Sensor)	Not home position	Home position
6139 12	Shift HP Sensor	Not home position	Home position
6139 13	Paper Sensor (Stack Height Sensor)	Output tray not detected	Output tray detected
6139 14	Tray Lower Sensor (Lower Tray Lower Limit Sensor)	Lower limit	Not lower limit
6139 15	Proof Full Sensor (Paper Limit Sensor)	Not full	Full

WWW.SERVICE-MANUAL.NET

Bridge Unit (D386)/ Side Tray (D542)

6150	Description	Reading	
		0	1
6150 1	Bridge/Left: Exit Sensor	Paper detected	Paper not detected
6150 2	Bridge/Left: Feed Sensor	Paper detected	Paper not detected
6150 3	Bridge/Left: Shift Set Detection	Set	Not set
6150 4	Bridge/Left: Exit Cover Detection	Closed	Open
6150 5	Bridge/Left: Feed Cover Detection	Closed	Open
6150 6	Left/Left Exit Sensor	Paper detected	Paper not detected

Internal Shift Tray (D388)

6152	Description	Reading	
		0	1
6152 2	Shift: Position Sensor	Tray position: Front	Tray position: Rear

WWW.SERVICE-MANUAL.NET

1 Bin Tray (D536)

6154	Description	Reading	
		0	1
6154 1	1 bin: Set Detection	Set	Not set
6154 2	1 bin: Paper Sensor	Paper detected	Paper not detected

Two-Tray PFU (D537)/ LCIT 2000 (D538)/ LCIT 1200 (D539)

6160	Description	Reading	
		0	1
6160 1	Bank: Tray3: Feed Sensor	Paper not detected	Paper detected
6160 2	Bank: Tray4: Feed Sensor	Paper not detected	Paper detected
6160 3	Bank: Tray5: Feed Sensor	Paper not detected	Paper detected
6160 4	Bank: Tray3: Relay Sensor	Paper not detected	Paper detected
6160 5	Bank: Tray4: Relay Sensor	Paper not detected	Paper detected
6160 6	Bank: Tray5: Relay Sensor	Paper not detected	Paper detected
6160 7	Bank: Feed Cover Detection	Closed	Open
6160 11	Bank: Palau: Paper Supply Switch	Closed	Open
6160 12	Bank: Palau: Slide Switch	Closed	Open

WWW.SERVICE-MANUAL.NET

3.9.2 OUTPUT CHECK TABLE

Copier

5804	Display	Description
5804 3	Drum/Dev Motor: K: HighSpeed	Drum/Development Drive Motor-K: HighSpeed
5804 4	Drum/Dev Motor: K: MiddleSpeed	Drum/Development Drive Motor-K: Middle Speed
5804 5	Drum/Dev Motor: K: LowSpeed	Drum/Development Drive Motor-M: Low Speed
5804 10	Drum/Dev Motor: M: HighSpeed	Drum/Development Drive Motor- C: HighSpeed
5804 11	Drum/Dev Motor: M: MiddleSpeed	Drum/Development Drive Motor-Y: Middle Speed
5804 12	Drum/Dev Motor: M: LowSpeed	Drum/Development Drive Motor-Y: Low Speed
5804 17	Drum/Dev Motor: C: HighSpeed	Drum/Development Drive Motor- C: HighSpeed
5804 18	Drum/Dev Motor: C: MiddleSpeed	Drum/Development Drive Motor-Y: Middle Speed
5804 19	Drum/Dev Motor: C: LowSpeed	Drum/Development Drive Motor-Y: Low Speed
5804 24	Drum/Dev Motor: Y: HighSpeed	Drum/Development Drive Motor- C: HighSpeed
5804 25	Drum/Dev Motor: Y: MiddleSpeed	Drum/Development Drive Motor-Y: Middle Speed

WWW.SERVICE-MANUAL.NET

5804 26	Drum/Dev Motor: Y: LowSpeed	Drum/Development Drive Motor-Y: Low Speed
5804 31	Fusing Exit Motor: HighSpeed	Fusing/Paper Exit Motor: HighSpeed
5804 32	Fusing Exit Motor: MiddleSpeed	Fusing/Paper Exit Motor: Middle Speed
5804 33	Fusing Exit Motor: LowSpeed	Fusing/Paper Exit Motor: Low Speed
5804 35	Fusing Exit Motor: LLowSpeed	Fusing/Paper Exit Motor: LLowSpeed
5804 37	Toner Relay Motor	Toner Transport Motor
5804 40	Image Transfer Motor: HighSpeed	ITB Drive Motor: HighSpeed
5804 41	Image Transfer Motor: MiddleSpeed	ITB Drive Motor: Middle Speed
5804 42	Image Transfer Motor: LowSpeed	ITB Drive Motor: Low Speed
5804 50	Feed Motor: HighSpeed	Paper Feed Motor: High Speed
5804 51	Feed Motor: IncreaseSpeed	Paper Feed Motor: Increase Speed
5804 52	Feed Motor: MiddleSpeed	Paper Feed Motor: Middle Speed
5804 53	Feed Motor: MiddleIncreaseSpeed	Paper Feed Motor: Middle Increase Speed
5804 54	Feed Motor: LowSpeed	Paper Feed Motor: Low Speed
5804 55	Feed Motor: LowInceraseSpeed	Paper Feed Motor: Low Incerase Speed
5804 60	Regist Motor: HighSpeed	Registration Motor: High Speed
5804 61	Regist Motor: MiddleSpeed	Registration Motor: Middle Speed
5804 62	Regist Motor: LowSpeed	Registration Motor: Low Speed
5804 67	Duplex Feed M:CW:HighSpeed	Duplex/By-pass Motor: CW: High Speed

WWW.SERVICE-MANUAL.NET

5804 68	Duplex Feed M:CW:MiddleSpeed	Duplex/By-pass Motor: CW: Middle Speed
5804 69	Duplex Feed Motor: CW: LowSpeed	Duplex/By-pass Motor: CW: Low Speed
5804 74	Duplex Feed M:CCW:HighSpeed	Duplex/By-pass Motor: CCW: High Speed
5804 75	Duplex Feed M:CCW:MiddleSpeed	Duplex/By-pass Motor: CCW: Middle Speed
5804 76	Duplex Feed Motor: CCW: LowSpeed	Duplex/By-pass Motor: CCW: Low Speed
5804 81	Duplex Reverse M:CW:HighSpeed	Duplex Inverter Motor: CW: High Speed
5804 82	Duplex Reverse M:CW:MiddleSpeed	Duplex Inverter Motor: CW: Middle Speed
5804 83	Duplex Reverse Motor: CW: LowSpeed	Duplex Inverter Motor: CW: Low Speed
5804 88	Duplex Reverse M:CCW:HighSpeed	Duplex Inverter Motor: CCW: High Speed
5804 89	Duplex Reverse M:CCW:MiddleSpeed	Duplex Inverter Motor: CCW: Middle Speed
5804 90	Duplex Reverse Motor: CCW: LowSpeed	Duplex Inverter Motor: CCW: Low Speed
5804 95	ITB Contact Motor	Image Transfer Belt Contact Motor
5804 96	Paper Transfer Contact Motor	Paper Transfer Contact Motor
5804 97	1st Tray Lift Motor: Up	Tray Lift Motor 1: Lift Up
5804 98	1st Tray Lift Motor: Down	Tray Lift Motor 1: Lift Down

WWW.SERVICE-MANUAL.NET

5804 99	2nd Tray Lift Motor: Up	Tray Lift Motor 2: Lift Up
5804 100	2nd Tray Lift Motor: Down	Tray Lift Motor 2: Lift Down
5804 102	Fusing Pressue Release Motor	Pressure Roller Contact Motor
5804 104	Polygon Moter: LL	Polygon Motor: LL
5804 105	Polygon Moter: L	Polygon Motor: L
5804 107	Polygon Moter: HH	Polygon Motor: HH
5804 110	Air Flow Fan: Front	Ventilation Fan – Front
5804 111	Air Flow Fan:Rear	Ventilation Fan – Rear
5804 112	Fusing Fan:H	Fusing Fan: High Speed
5804 113	Fusing Fan:L	Fusing Fan: Low Speed
5804 114	PSU Cooling Fan	PSU Fan 1: High Speed
5804 115	2nd Duct Fan: H	Duct Fan 2: High Speed
5804 117	3rd Duct Fan: H	Duct Fan 3: High Speed
5804 119	Paper Exit Fan:H	Paper Exit Fan: High Speed
5804 121	Fusing Coil Fan	IH Coil Fan
5804 122	IH Power Supply Cooling Fan	IH Inverter Fan
5804 126	Development Clutch: Bk	Development Clutch-K
5804 127	Development Clutch: M	Development Clutch-M
5804 128	Development Clutch: C	Development Clutch-C
5804 129	Development Clutch: Y	Development Clutch-Y
5804 130	Toner Bottle Clutch: Bk	Toner Bottle Clutch-K
5804 131	Toner Bottle Clutch: M	Toner Bottle Clutch-M

WWW.SERVICE-MANUAL.NET

5804 132	Toner Bottle Clutch: C	Toner Bottle Clutch-C
5804 133	Toner Bottle Clutch:Y	Toner Bottle Clutch-Y
5804 134	Toner Supply Pump: Bk	Toner Supply Clutch: Bk
5804 135	Toner Supply Pump: M	Toner Supply Clutch: M
5804 136	Toner Supply Pump: C	Toner Supply Clutch: C
5804 137	Toner Supply Pump: Y	Toner Supply Clutch: Y
5804 138	1st Paper Feed Clutch	Paper Feed Clutch 1
5804 139	2nd Paper Feed Clutch	Paper Feed Clutch 2
5804 140	Bypass Feed Clutch	By-pass Feed Clutch
5804 141	Bypass Pickup Solenoid	Bypass Pickup Solenoid
5804 143	TD Sensor Shutter Solenoid	ID Sensor Shutter Solenoid
5804 144	Exit Junction Solenoid	Junction Gate 1 Solenoid
5804 145	1st Feed Pickup Solenoid	1st Pickup Solenoid
5804 146	2nd Feed Pickup Solenoid	2nd Pickup Solenoid
5804 150	Duplex Fan: HighSpeed	
5804 151	Duplex Fan: LowSpeed	
5804 152	Air Flow Fan: Middle 1	
5804 153	Reserve Fan1: LowSpeed	
5804 154	Air Flow Fan: Middle 2	
5804 155	Reserve Fan2: LowSpeed	

WWW.SERVICE-MANUAL.NET

5804 161	PCL: Bk	
5804 162	PCL: M	
5804 163	PCL: C	
5804 164	PCL: Y	
5804 166	HST Sensor:Bk	TD Sensor:Bk
5804 167	HST Sensor: M	TD Sensor: M
5804 168	HST Sensor: C	TD Sensor: C
5804 169	HST Sensor: Y	TD Sensor: Y
5804 170	Toner End Sensor: Bk	Toner End Sensor: Bk
5804 171	Toner End Sensor: M	Toner End Sensor: M
5804 172	Toner End Sensor: C	Toner End Sensor: C
5804 173	Toner End Sensor: Y	Toner End Sensor: Y
5804 174	TM Sensor: Front	ID Sensor: Front
5804 175	TM Sensor: Center	ID Sensor: Center
5804 176	TM Sensor: Rear	ID Sensor: Rear
5804 177	TM Sensor: M	ID Sensor: M
5804 178	TM Sensor: C	ID Sensor: C
5804 179	TM Sensor: Y	ID Sensor: Y
5804 181	PP:Charge AC:Y:HighSpeed	-
5804 182	PP:Charge AC:Y:MiddleSpeed	-
5804 183	PP:Charge AC:Y:LowSpeed	-

WWW.SERVICE-MANUAL.NET

5804 186	PP:Development:K	-
5804 187	PP:Development:M	-
5804 188	PP:Development:C	-
5804 189	PP:Development:Y	-
5804 190	PP:Separation	-
5804 192	RFID ON/OFF: K	-
5804 193	RFID ON/OFF: Y	-
5804 194	RFID ON/OFF: C	-
5804 195	RFID ON/OFF: M	-
5804 196	RFID COM ON:K	-
5804 197	RFID COM ON: Y	-
5804 198	RFID COM ON: C	-
5804 199	RFID COM ON: M	-
5804 202	Scanner Lamp	-
5804 216	LD1: K	-
5804 217	LD2: K	-
5804 218	LD1: Ma	-
5804 219	LD2: Ma	-
5804 220	LD1: Cy	-
5804 221	LD2: Cy	-
5804 222	LD1: Ye	-
5804 223	LD2: Ye	-
5804 224	PP:ITB:K	PP: Image Transfer Roller: K
5804 225	PP:ITB:M	PP: Image Transfer Roller: M

WWW.SERVICE-MANUAL.NET

5804 226	PP:ITB:C	PP: Image Transfer Roller: C
5804 227	PP:ITB:Y	PP: Image Transfer Roller: Y
5804 228	PP:PTR:+	PP: Paper Transfer Roller:+
5804 229	PP:PTR:-	PP: Paper Transfer Roller:-
5804 231	PP: ChargeDC: K	-
5804 232	PP: ChargeDC: M	-
5804 233	PP: ChargeDC: C	-
5804 234	PP: ChargeDC: Y	-
5804 237	PP:Charge AC:K:HighSpeed	-
5804 238	PP:Charge AC:K:MiddleSpeed	-
5804 239	HVPS: ChargeAC: K: LowSpeed	-
5804 244	PP:Charge AC:M:HighSpeed	-
5804 245	PP:Charge AC:M:MiddleSpeed	-
5804 246	HVPS: ChargeAC: M: LowSpeed	-
5804 251	PP:Charge AC:C:HighSpeed	-
5804 252	PP:Charge AC:C:MiddleSpeed	-
5804 253	HVPS: ChargeAC: C: LowSpeed	-

WWW.SERVICE-MANUAL.NET

ARDF (D540)

6008	Display	Description
6008 1	Pick-Up Motor Forward	
6008 2	Pick-Up Motor Reverse	
6008 3	Feed Motor Forward	Feed Motor-Forward rotation
6008 4	Feed Motor Reverse	Feed Motor-Reverse rotation
6008 5	Relay Motor Forward	Transport Motor- Forward rotation
6008 6	Relay Motor Reverse	
6008 7	Inverter Motor Forward	Transport Motor- Forward rotation
6008 8	Inverter Motor Reverse	-
6008 11	Inverter Solenoid	-
6008 12	Stamp	Stamp Solenoid
6008 13	Fan Motor	-
6008 14	Feed Clutch	-
6008 15	Feed Solenoid	-

WWW.SERVICE-MANUAL.NET

1000-Sheet Finisher (B408)

6144	Display	Description
6144 1	Relay Up Motor	Upper Transport Motor
6144 2	Relay Down Motor	Lower Transport Motor
6144 3	Exit Motor	-
6144 4	Proof Junction Gate SOL	Tray Junction Gate Solenoid
6144 5	Tray Up Motor	Lower Tray Lift Motor
6144 6	Jogger Motor	Jogger Fence Motor
6144 7	Staple Moving Motor	Stapler Motor
6144 8	Staple Motor	Stapler Hammer
6144 9	Staple Junction Gate SOL	Stapler Junction Gate Solenoid
6144 10	Positioning Roller Solenoid	Positioning Roller Solenoid
6144 11	Stack Feed-out Motor	-
6144 12	Shift Motor	-
6144 13	Exit Guide Plate Motor	-

WWW.SERVICE-MANUAL.NET

2000/3000-Sheet (Booklet) Finisher (B804/B805)

6145	Display	Description
6145 1	Entrance Motor	Finisher Entrance Motor
6145 2	Upper Feed Motor	Upper Transport Motor
6145 3	Lower Feed Motor	Lower Transport Motor
6145 4	Exit Motor	Upper/Proof Tray Exit Motor
6145 5	Knock Roller Motor	Clamp Roller Retraction Motor
6145 6	Shift Motor	Shift Roller Motor
6145 7	Exit Guide Plate Open/Close Motor	Exit Guide Plate Motor
6145 8	Tray Lift Motor	Upper Tray Lift Motor
6145 9	Oscillating Back Roller Motor	Stacking Sponge Roller Motor
6145 10	Jogger Motor	Jogger Fence Motor
6145 11	Stack Feed-out Motor	Feed Out Belt Motor
6145 12	Staple Moving Motor	Corner Stapler Movement Motor
6145 13	Staple Skew Motor	Corner Stapler Rotation Motor
6145 14	Staple Motor	Corner Stapler EH530
6145 15	Upper Junction Gate Solenoid	Proof Junction Gate Solenoid
6145 16	Lower Junction Gate Solenoid	Stapling Tray Junction Gate Solenoid
6145 17	Knock Solenoid	Stapling Edge Pressure Plate Solenoid
6145 18	Trailing Edge Hold Solenoid	Positioning Roller Solenoid
6145 19	Saddle Stitch Hold Solonoid	Booklet Pressure Roller Solenoid
6145 20	Stack Junction Gate Open/Close Motor	Stack Junction Gate Motor
6145 21	Trailing Edge Fence Moving	Fold Unit Bottom Fence Lift Motor

WWW.SERVICE-MANUAL.NET

	Motor	
6145 22	Saddle Stitch Staple Motor: Front	Booklet Stapler EH185R: Front
6145 23	Saddle Stitch Staple Motor: Rear	Booklet Stapler EH185R: Rear
6145 24	Folder Plate Motor	Fold Plate Motor
6145 25	Folder Roller Motor	Fold Roller Motor
6145 26	Drive Roller Oscillating Motor	Positioning Roller Motor
6145 27	Punch Motor	Punch Drive Motor
6145 28	Punch Moving Motor	Punch Movement Motor
6145 29	Punch Registration Detection Motor	Paper Position Sensor Slide Motor

Bridge Unit (D386)/ Side Tray (D542)

6151	Display	Description
6151 1	Bridge/Left: Feed Motor: Current Selection	Bridge: Feed Motor: Current switching signal
6151 2	Bridge/Left: Feed Motor:Reset	Bridge: Feed Motor:Reset
6151 3	Bridge/Left: Feed Motor:Enable	Bridge: Feed Motor:Enable
6151 6	Bridge/Left: Feed Motor: High Speed	Bridge: Feed Motor: High Speed
6151 7	Bridge/Left: Feed Motor: Middle Speed	Bridge: Feed Motor: Middle Speed
6151 8	Bridge/Left: Feed Motor: Low Speed	Bridge: Feed Motor: Low Speed
6151 11	Bridge/Left: Junction Solenoid	Bridge: Junction Solenoid

WWW.SERVICE-MANUAL.NET

Shift Tray (D388)

6153	Display	Description
6153 1	Shift Tray: Motor	-

1 Bin Tray (D536)

6155	Display	Description
6155 1	1 bin: Junction Solenoid	-

Two-Tray PFU (D537)/ LCIT 2000 (D538)/ LCIT 1200 (D539)

6161	Display	Description
6161 5	Bank1: Feed Motor: HighSpeed	Feed Motor:High Speed (D537/D538/D387)
6161 6	Bank1: Feed Motor: IncreaseSpeed	Feed Motor: Increase Speed (D537/D538/D387)
6161 7	Bank1: Feed Motor: MiddleSpeed	Feed Motor: Middle Speed (D537/D538/D387)
6161 8	Bank1: Feed Motor: MiddleIncreaseSpeed	Feed Motor: Middle Increase Speed (D537/D538/D387)
6161 9	Bank1: Feed Motor: LowSpeed	Feed Motor: Low Speed (D537/D538/D387)
6161 10	Bank1: Feed Motor: LowIncreaseSpeed	Feed Motor:Low Increase Speed (D537/D538/D387)
6161 15	Bank2: Feed Motor:HighSpeed	Feed Motor:High Speed (D539)

WWW.SERVICE-MANUAL.NET

6161 16	Bank2: Feed Motor: IncreaseSpeed	Feed Motor: Increase Speed
6161 17	Bank2: Feed Motor: MiddleSpeed	Feed Motor: Middle Speed
6161 18	Bank2: Feed Motor: MiddleIncreaseSpeed	Feed Motor: Middle Increase Speed
6161 19	Bank2: Feed Motor: LowSpeed	Feed Motor: Low Speed
6161 20	Bank2: Feed Motor: LowIncreaseSpeed	Feed Motor: Low Increase Speed (D539)
6161 30	Bank:Tray3: PU Solenoid	Pick-up Solenoid (D537/D538)
6161 31	Bank:Tray4: PU Solenoid	Pick-up Solenoid (D537/D539)
6161 32	Bank:Tray5: PU Solenoid	Pick-up Solenoid (D539)
6161 35	Bank:Tray3: Feed Clutch	Pick-up Solenoid (D537/D538)
6161 36	Bank:Tray4: Feed Clutch	Pick-up Solenoid (D537/D539)
6161 37	Bank:Tray5: Feed Clutch	Pick-up Solenoid (D539)

WWW.SERVICE-MANUAL.NET

3.10 PRINTER SERVICE MODE

3.10.1 SP1-XXX (SERVICE MODE)

1001	Bit Switch			
001	Bit Switch 1		0	1
	bit 0	DFU	-	-
	bit 1	DFU	-	-
	bit 2	DFU	-	-
	bit 3	**No I/O Timeout**	0: Disable	1: Enable
		Enable: The MFP I/O Timeout setting will have no effect. I/O Timeouts will never occur.		
	bit 4	**SD Card Save Mode**	0: Disable	1: Enable
		Enable: Print jobs will be saved to an SD Card in the GW SD slot (☛"Card Save Function" in "System Maintenance" chapter of the Field Service Manual).		
	bit 5	DFU	-	-
	bit 6	DFU	-	-
	bit 7	**[RPCS,PCL]: Printable area frame border**	0: Disable	1: Enable
		Enable: The machine prints all RPCS and PCL jobs with a border on the edges of the printable area.		

WWW.SERVICE-MANUAL.NET

1001	Bit Switch			
002	Bit Switch 2		0	1
	bit 0	DFU	-	-
	bit 1	DFU	-	-
	bit 2	**Applying a collation Type**	Shift Collate	Normal Collate
		A collation type (shift or normal) will be applied to all jobs that do not already have a 'Collate Type' configured. Note ▪ If #5-0 is enabled, this Bit Switch has no effect.		
	bit 3	**[PCL5e/c,PS]: PDL Auto Switching**	0: Enable	1: Disable
		Disable: The MFPs ability to change the PDL processor mid-job. Some host systems submit jobs that contain both PS and PCL5e/c. If Auto PDL switching is disabled, these jobs will not be printed properly.		
	bit 4	DFU	-	-
	bit 5	DFU	-	-
	bit 6	DFU	-	-
	bit 7	DFU	-	-

WWW.SERVICE-MANUAL.NET

1001	Bit Switch			
003	Bit Switch 3		0	1
	bit 0	DFU	-	-
	bit 1	DFU	-	-
	bit 2	**[PCL5e/c]: Legacy HP compatibility**	0: Disable	1: Enable
		Enable: Uses the same left margin as older HP models such as HP4000/HP8000. In other words, the left margin defined in the job (usually "<ESC>*r0A") will be changed to "<ESC>*r1A"		
	bit 3	DFU	-	-
	bit 4	DFU	-	-
	bit 5	DFU	-	-
	bit 6	DFU	-	-
	bit 7	DFU	-	-

1001	**Bit Switch**			
004	Bit Switch 4 **DFU**		0	1
	bit 0	DFU	-	-
bit 1	DFU	-	-	
bit 2	DFU	-	-	
bit 3	**IPDS print-side reversal**	0: Disable	1: Enable	
		If enabled, the simplex pages of IPDS jobs will be printed on the front side because of printing on the back side of the page. This might reduce printing speed.		
bit 4	DFU	-	-	

WWW.SERVICE-MANUAL.NET

bit 5	DFU	-	-	
bit 6	DFU	-	-	
bit 7	DFU	-	-	

1001	Bit Switch			
005	Bit Switch 5		0	1
	bit 0	**Show "Collate Type", "Staple Type" and "Punch Type" buttons on the operation panel.**	Disable	Enable
		If enabled, users will be able to configure a Collate Type, Staple Type, and Punch Type from the operation panel. The available types will depend on the device and configured options. After enabling the function, the settings will appear under: "User Tools > Printer Features > System"		
	bit 1	**Multiple copies if a paper size or type mismatch occurs**	0: Disable (Single copy)	1: Enable (Multiple copy)
		If a paper size or type mismatch occurs during the printing of multiple copies, only a single copy is output by default. Using this BitSw, the device can be configured to print all copies even if a paper mismatch occurs.		
	bit 2	DFU	-	-
	bit 3	**[PS] PS Criteria**	Pattern3	Pattern1
		Change the number of PS criterion used by the PS interpreter to determine whether a job is PS data or not. Pattern3: includes most PS commands. Pattern1: A small number of PS tags and headers		
	bit 4	**Increase max number of the stored jobs to 1000 jobs.**	Disable (100)	Enable (1000)
		Enable: Changes the maximum number of jobs that can be stored on the HDD via Job Type settings to 1000. The default is 100.		

WWW.SERVICE-MANUAL.NET

	bit 5	**Face-up output**	Disable	Enable
		Enable: All print jobs will be output face-up in the destination tray.		
	bit 6	**Method for determining the image rotation for the edge to bind on.**	0: Disable	1: Enable
		If enabled, the image rotation will be performed as they were in the specifications of older models for the binding of pages of mixed orientation jobs. The old models are below: - PCL: Pre-04A models - PS/PDF/RPCS:Pre-05S models		
	bit 7	Letterhead mode printing	0: Disable	1: Enable (Duplex)

1001	Bit Switch		
006	Bit Switch 6 **DFU**	-	-

1001	Bit Switch			
007	Bit Switch 7		0	1
	bit 0	**Print path**	0: Disable	1: Enable
		If enabled, simplex pages (in mixed simplex/duplex PS/PCL5 jobs only) and the last page of an odd paged duplex job (PS, PCL5, PCL6), are always routed through the duplex unit. Not having to switch paper paths increases the print speed slightly.		
	bit 1 to 7	DFU	-	-

WWW.SERVICE-MANUAL.NET

1001	Bit Switch			
008	Bit Switch 8		0	1
	bit 0	DFU	-	-
	bit 1	DFU	-	-
	bit 2	DFU	-	-
	bit 3	**[PCL,PS]: Allow BW jobs to print without requiring User Code**	Disable	Enable
		Enable: BW jobs submitted without a user code will be printed even if usercode authentication is enabled. Note ▪ Color jobs will not be printed without a valid user code.		
	bit 4	DFU	-	-
	bit 5	DFU	-	-
	bit 6	DFU	-	-
	bit 7	DFU	-	-

WWW.SERVICE-MANUAL.NET

1001	Bit Switch			
009	Bit Switch 9		0	1
	bit 0	**PDL Auto Detection timeout of jobs submitted via USB or Parallel Port (IEEE 1284).**	"Disabled (Immediately)"	"Enabled (10 seconds)"
		To be used if PDL auto-detection fails. A failure of PDL autodetection doesn't necessarily mean that the job can't be printed. This bit switch tells the device whether to time-out immediately (default) upon failure or to wait 10 seconds.		
	bit 1	DFU	-	-
	bit 2	**Job Cancel**	Disabled (Not cancelled)	Enabled (Cancelled)
		If this bit switch, all jobs will be cancelled after a jam occurs. Note: If this bitsw is enabled, printing under the following conditions might result in problems: - Job submission via USB or Parallel Port - Spool printing (WIM >Configuration > Device Settings > System)		
	bit 3	**PCL/PS bypass tray paper rotation (SEF/LEF)**	0: Disable	1: Enable
		This bitsw causes the device to revert to the behavior of previous generations. It only takes effect if "Bypass Tray Setting Priority" = "Driver/Command". Previous spec (bitsw=1): If a standard sized paper mismatch occurred in the bypass tray, the MFP always prompted for SEF paper. If this bitsw=0 (default) then in the event of a standard sized paper mismatch, the MFP will always prompt for paper of the rotation (SEF/LEF) determined by the MFP bypass tray paper setting or by the bypass tray sensor.		

WWW.SERVICE-MANUAL.NET

⇒	Bit 4	Timing of the PJL Status ReadBack (JOB END) when printing multiple collated copies.	Disabled	Enabled
		This bitsw determines the timing of the PJL USTATUS JOB END sent when multiple collated copies are being printed. 0 (default): JOB END is sent by the device to the client after the first copy has completed printing. This causes the page counter to be incremented after the first copy and then again at the end of the job. 1: JOB END is sent by the device to the client after the last copy has finished printing. This causes the page counter to be incremented at the end of each job.		
⇒	Bit 5 to 7	DFU		

1003	[Clear Setting]
1003 1	Initialize Printer System
	Initializes settings in the "System" menu of the user mode.
1003 3	Delete Program

1004	[Print Summary]		
1004 1	Print Summary		
	Prints the service summary sheet (a summary of all the controller settings).		
1005	[Display Version]		
1005 1	Disp. Version		
	Displays the version of the controller firmware.		
1006	[Sample/Locked Print]	*CTL	**0**: Linked, 1: On
1006 1	Enables and disables the document server. When you select "0," the document server is enabled or disabled in accordance with Copy Service Mode SP5-967. When you select "1," the document server is enabled regardless of Copy Service Mode SP5-967.		

WWW.SERVICE-MANUAL.NET

1101	[Data Recall]		
	Recalls a set of gamma settings. This can be either a) the factory setting, b) the previous setting, or c) the current setting.		
1101 1	Factory	*CTL	
1101 2	Previous		
1101 3	Current		
1101 4	ACC		

1102	[Resolution Setting]
	Selects the printing mode (resolution) for the printer gamma adjustment.
1102 1	**2400x600 Photo**, 1800x600 Photo, 600 x 600 Photo, 2400x600 Text, 1800x600, Text, 600x600 Text

1103	[Test Page]
	Prints the test page to check the color balance before and after the gamma adjustment.
1103 1	Color Gray Scale
1103 2	Color Pattern

1104	[Gamma Adjustment]		
	Adjusts the printer gamma for the mode selected in the "Mode Selection" menu.		
1104 1	Black: Highlight	*CTL	[0 to 30 / **15** / 1/step]
1104 2	Black: Shadow		
1104 3	Black: Middle		
1104 4	Black: IDmax		
1104 21	Cyan: Highlight	*CTL	[0 to 30 / **15** / 1/step]

WWW.SERVICE-MANUAL.NET

1104 22	Cyan: Shadow		
1104 23	Cyan: Middle		
1104 24	Cyan: IDmax		
1104 41	Magenta: Highlight	*CTL	[0 to 30 / **15** / 1/step]
1104 42	Magenta: Shadow		
1104 43	Magenta: Middle		
1104 44	Magenta: IDmax		
1104 61	Yellow: Highlight	*CTL	[0 to 30 / **15** / 1/step]
1104 62	Yellow: Shadow		
1104 63	Yellow: Middle		
1104 64	Yellow: IDmax		

1105	[Save Tone Control Value]		
	Stores the print gamma adjusted with the "Gamma Adj." menu item as the current setting. Before the machine stores the new "current setting", it moves the data currently stored as the "current setting" to the "previous setting" memory storage location.		
1105 1	Save Tone Control Value		

1106	[Toner Limit]		
	Adjusts the maximum toner amount for image development.		
1106 1	Toner Limit Value	*CTL	[100 to 400 / **260** / 1 %/step]

WWW.SERVICE-MANUAL.NET

3.11 SCANNER SP MODE

3.11.1 SP1-XXX (SYSTEM AND OTHERS)

1004	**[Compression Type]**		
	Selects the compression type for binary picture processing.		
1004 1	Compression Type	*CTL	[1 to 3 / **1** / 1/step] 1: MH, 2: MR, 3: MMR

1005	**[Erase margin]**		
	Creates an erase margin for all edges of the scanned image. If the machine has scanned the edge of the original, create a margin. This SP is activated only when the machine uses TWAIN scanning.		
1005 1	Range from 0 to 5 mm	*CTL	[0 to 5 / **0** / 1 mm/step]

1009	**[Remote scan disable]**	*CTL	[0 or 1 / **0** / -] 0: enable, 1: disable
1009 1	Enable or disable remote scan.		

1010	**[Non Display Clear Light PDF]**	*CTL	[0 or 1 / **0** / -] 0: Display, 1: No display
1010 1	Enable or disable remote scan.		

WWW.SERVICE-MANUAL.NET

3.11.2 SP2-XXX (SCANNING-IMAGE QUALITY)

2021	**[Compression Level (Gray-scale)]**		
	Selects the compression ratio for grayscale processing mode (JPEG) for the three settings that can be selected at the operation panel.		
2021 1	Level 3 (Middle Image Quality)	*CTL	[5 to 95 / **40** / 1 /step]
2021 2	Level 2 (High Image Quality)		[5 to 95 / **50** / 1 /step]
2021 3	Level 4 (Low Image Quality)		[5 to 95 / **30** / 1 /step]
2021 4	Level 1 (Highest Image Quality)		[5 to 95 / **60** / 1 /step]
2021 5	Level 5 (Lowest Image Quality)		[5 to 95 / **20** / 1 /step]

2024	**[Compression ratio of ClearLight PDF]**		
	Selects the compression ratio for clearlight PDF for the two settings that can be selected at the operation panel.		
2024 1	Compression Ratio (Normal image)	*CTL	[5 to 95 / **25** / 1 /step]
2024 2	Compression Ratio (High comp image)		[5 to 95 / **20** / 1 /step]

WWW.SERVICE-MANUAL.NET

3.12 TEST PATTERN PRINTING

Printing Test pattern: SP2-109

Some of these test patterns are used for copy image adjustments but most are used primarily for design testing.

Note

- Do not operate the machine until the test pattern is printed out completely. Otherwise, an SC occurs.

1. Enter the SP mode and select **SP2-109-003**.
2. Enter the number for the test pattern that you want to print and press [#].
3. When you want to select the single color of Magenta, Yellow or Cyan for printing a test pattern, select the color with SP2-109-005 (2: Magenta, 3: Yellow, 4: Cyan).
4. When you want to change the density of printing a test pattern, select the density with SP2-109-006 to -009 for each color.

   Note

   - If you select "0" with SP2-109-006 to -009, the color to be adjusted to "0" does not come up on a test pattern.
5. When you are prompted to confirm your selection, touch "Yes" to select the test pattern for printing.
6. Touch "Copy Window" to open the copy window, then select the settings for the test print (paper size etc.).

   Note

   - If you want to use black and white printing, touch "Black & White" on the LCD. If you want to use color printing, touch "Full Colour" on the LCD.
7. Press the "Start" key to start the test print.
8. After checking the test pattern, touch "SP Mode" on the LCD to return to the SP mode display.
9. Reset all settings to the default values.
10. Touch "Exit" twice to exit SP mode.

WWW.SERVICE-MANUAL.NET

No.	Pattern	No.	Pattern
0	None	11	Independent Pattern (1-dot)
1	Vertial Line (1dot)	12	Independent Pattern (2-dot)
2	Vertial Line (2dot)	13	Independent Pattern (4-dot)
3	Horizontal Line (1dot)	14	Triming Area
4	Horizontal Line (2dot)	16	Tooth Check (Horizontal)
5	Grid Vertical Line	17	Band (Horizontal)
6	Grid Horizontal Line	18	Band (Vertical)
7	Grid Pattern Small	19	Checker Flag Pattern
8	Grid Pattern Large	20	Grayscale (Vertical Margin)
9	Argyle Pattern Small	21	Grayscale (Horizontal Margin)
10	Argyle Pattern Large	23	Full Dot Pattern

WWW.SERVICE-MANUAL.NET

WWW.SERVICE-MANUAL.NET

1000-SHEET FINISHER
B408

1000 SHEET FINISHER SR790 REVISION HISTORY		
Page	**Date**	**Added/Updated/New**
		None

WWW.SERVICE-MANUAL.NET

1000-SHEET FINISHER B408

TABLE OF CONTENTS

1. REPLACEMENT AND ADJUSTMENT 1
1.1 MAIN PCB 1
1.2 STAPLER UNIT 2
1.3 MOTORS 3
1.3.1 SHIFT MOTOR 3
1.3.2 STAPLER MOTOR 3
1.3.3 UPPER TRANSPORT MOTOR AND EXIT MOTOR 4
1.3.4 LOWER TRANSPORT MOTOR 4
1.4 MOTORS AND SENSORS 5
1.4.1 PREPARATION 5
1.4.2 STACK HEIGHT SENSOR 6
1.4.3 STAPLER TRAY PAPER SENSOR 6
1.4.4 LOWER TRAY LIFT MOTOR 7
1.4.5 STACK FEED-OUT MOTOR 7

2. TROUBLESHOOTING 8
2.1 JAM DETECTION 8

3. SERVICE TABLES 9
3.1 DIP SWITCH SETTINGS 9

4. DETAILED DESCRIPTIONS 10
4.1 GENERAL LAYOUT 10
4.2 ELECTRICAL COMPONENT LAYOUT 11
4.3 ELECTRICAL COMPONENT DESCRIPTION 13
4.4 DRIVE LAYOUT 15
4.5 JUNCTION GATES 16
Upper Tray Mode 16
Sort/Stack Mode 16
Staple Mode 16
4.6 UPPER TRAY 17
4.7 LOWER TRAY UP/DOWN MECHANISMS 18
4.8 PAPER SHIFT MECHANISM 19
4.9 JOGGER UNIT PAPER POSITIONING MECHANISM 20
4.10 EXIT GUIDE PLATE 21
4.11 STAPLER MECHANISM 22
4.12 STAPLER UNIT MOVEMENT MECHANISM 23
4.13 PAPER FEED-OUT MECHANISM 24

WWW.SERVICE-MANUAL.NET

WWW.SERVICE-MANUAL.NET

1. REPLACEMENT AND ADJUSTMENT

⚠CAUTION

Turn off the main power switch and unplug the machine before beginning any of the procedures in this section.

NOTE: This manual uses the following symbols.
☛ : See or Refer to : Screws : Connector : Clip ring
: E-ring

1.1 MAIN PCB

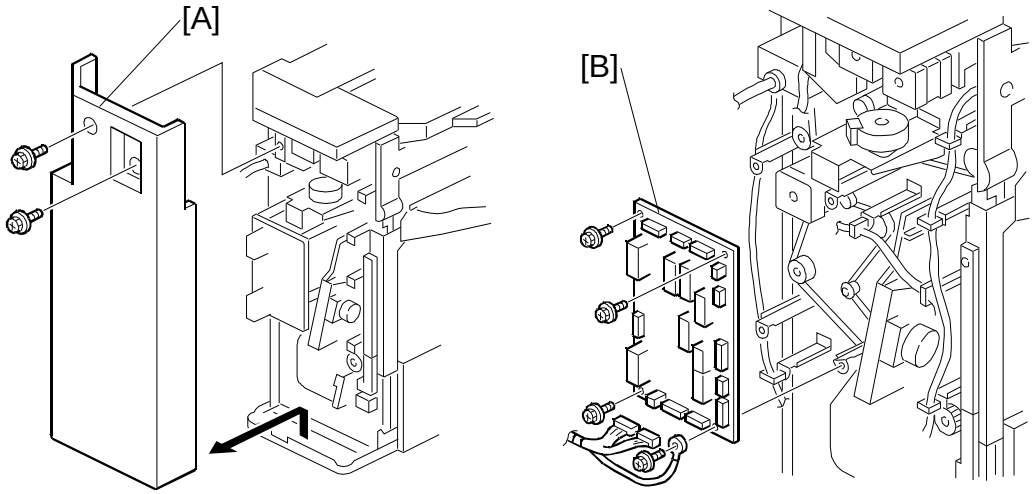

1. Rear cover [A] (x 2)
2. Main PCB [B] (x 4, All)

WWW.SERVICE-MANUAL.NET

1.2 STAPLER UNIT

1. Side cover [A] (☞ x 2)
2. Open exit guide plate [B]
3. Upper side cover [C] (☞ x 2)

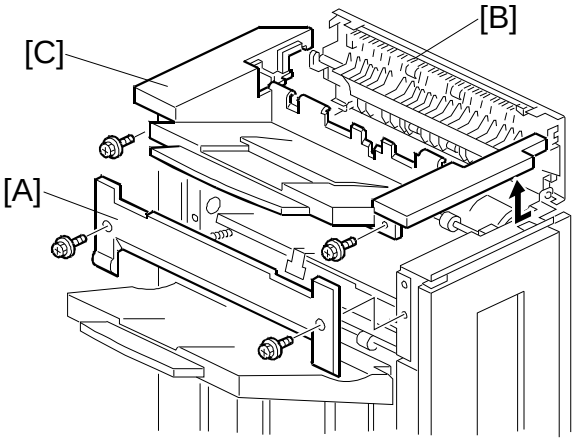

4. Front cover support plate [D] (☞ x 1)
5. Front cover [E]
6. Front inner cover [F] (☞ x 2)

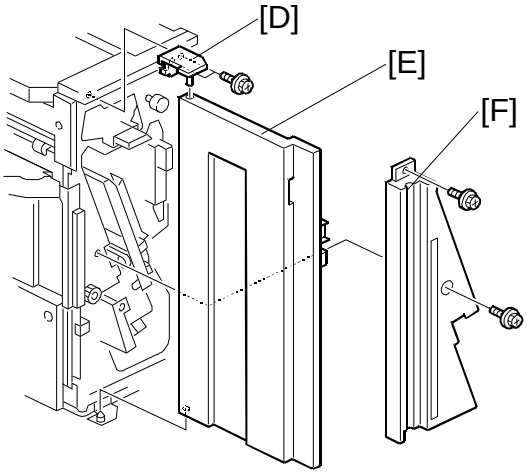

7. Harness [G]
8. Unhook the spring [H]
9. Turn the stapler unit [I] and take it out.
10. Bracket [J] (☞ x 2)

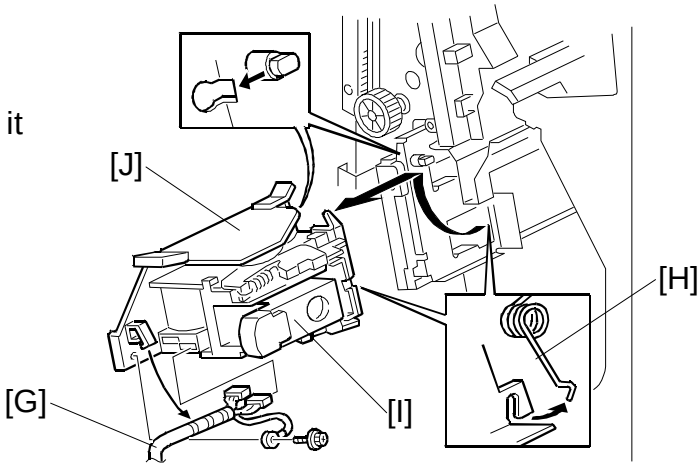

WWW.SERVICE-MANUAL.NET

1.3 MOTORS

1.3.1 SHIFT MOTOR

1. Rear cover (☛1.1)
2. Shift motor [A] (🔩 x 2, 🔌 x 1)

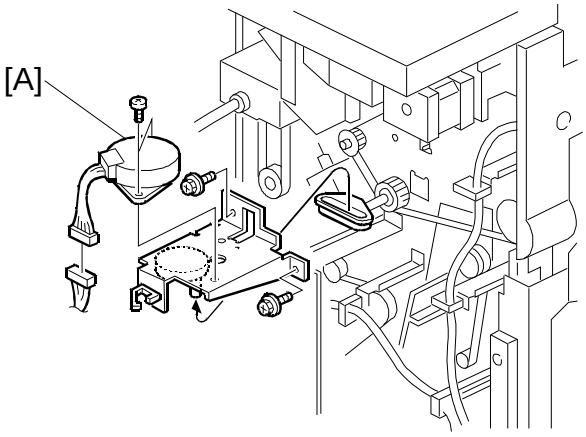

1.3.2 STAPLER MOTOR

1. Rear cover (☛1.1)
2. Stapler motor [A] (🔩 x 2, 🔌 x 1)

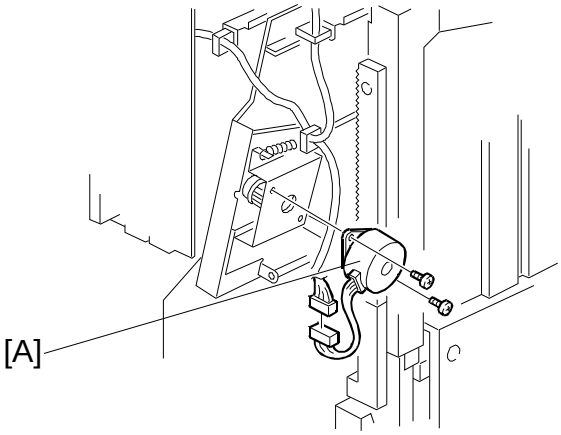

WWW.SERVICE-MANUAL.NET

1.3.3 UPPER TRANSPORT MOTOR AND EXIT MOTOR

1. Rear cover (☛1.1)
2. Motor assembly [A] (🔩 x 4, 🔌 x 2)
3. Upper transport motor [B] (🔩 x 4)
4. Exit motor [C] (🔩 x 4)

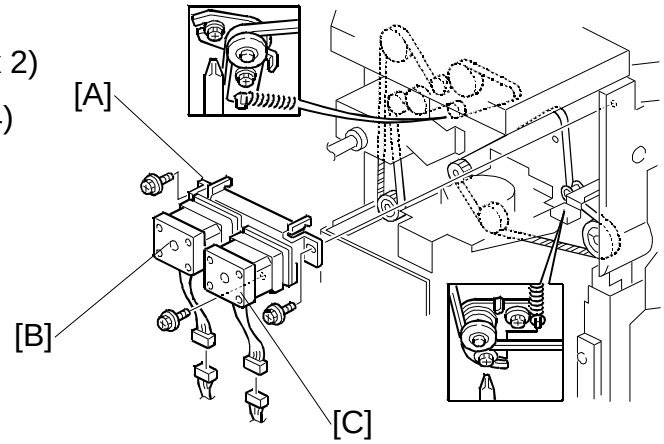

1.3.4 LOWER TRANSPORT MOTOR

1. Main PCB (☛1.1)
2. Lower transport motor [A] (🔩 x 2, 🔌 x 1)

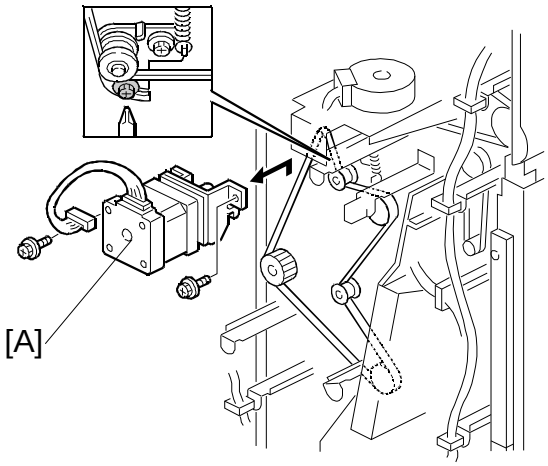

WWW.SERVICE-MANUAL.NET

1.4 MOTORS AND SENSORS

1.4.1 PREPARATION

1. Front cover and inner cover (☛1.2)
2. Upper side cover [A] (🖉 x 2)
3. Upper tray [B] (🖉 x 1)

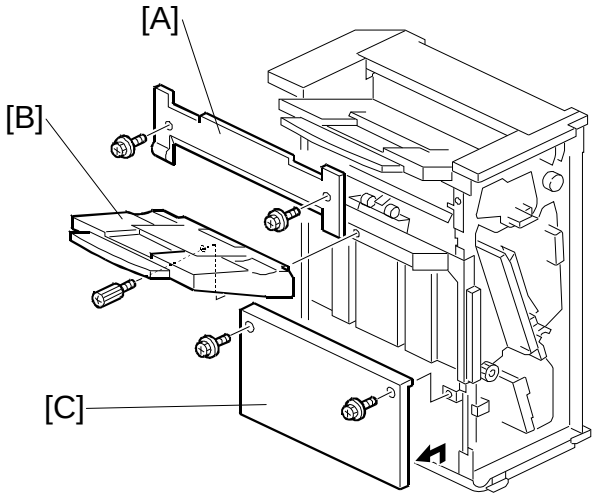

4. Lower side cover [C] (🖉 x 2)
5. Loosen the 2 screws [D].
6. Lower the lower tray guide plate [E].

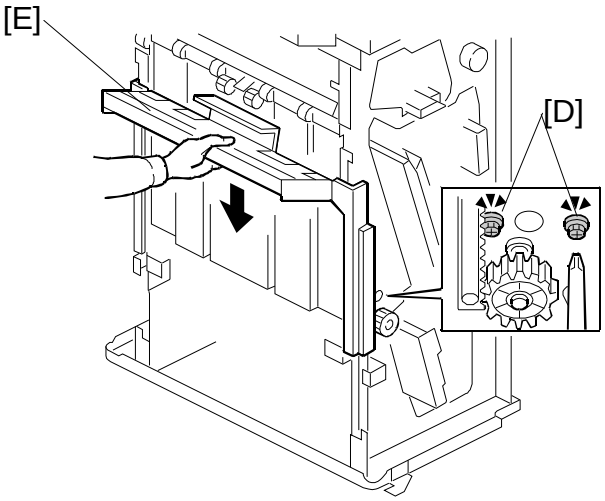

7. Guide plate [F] (🖉 x 4)

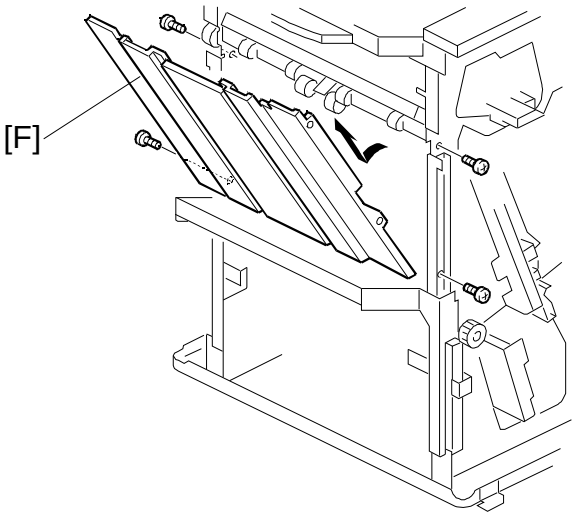

WWW.SERVICE-MANUAL.NET

1.4.2 STACK HEIGHT SENSOR

1. Stack height sensor assembly [A] (x 1)
2. Stack height sensor [B] (x 1)

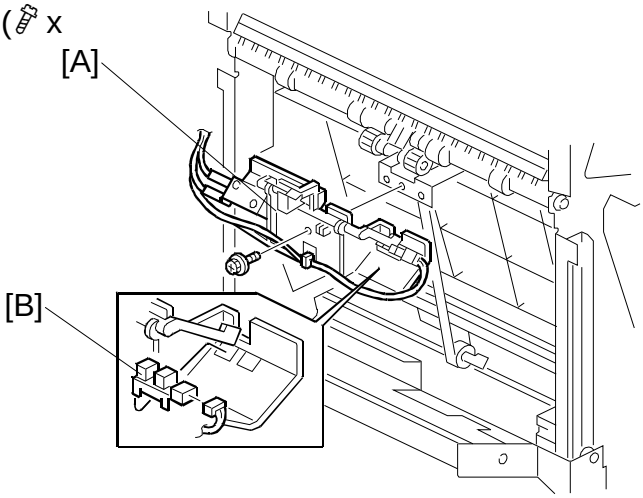

1.4.3 STAPLER TRAY PAPER SENSOR

1. Stapler tray paper sensor [A] (x 1)

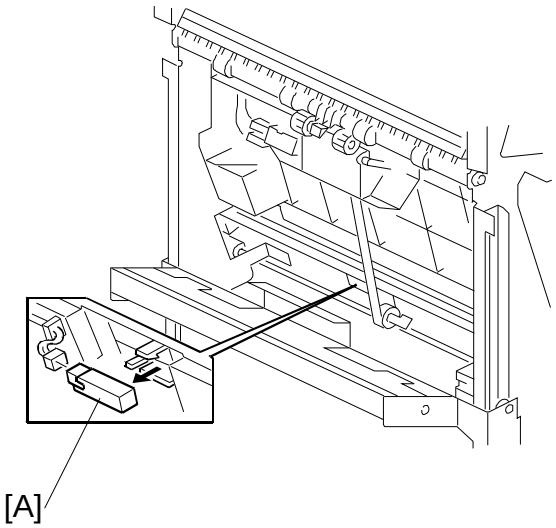

WWW.SERVICE-MANUAL.NET

1.4.4 LOWER TRAY LIFT MOTOR

1. Lower tray lift motor [A] (☞ x 2, ☞ x 1)

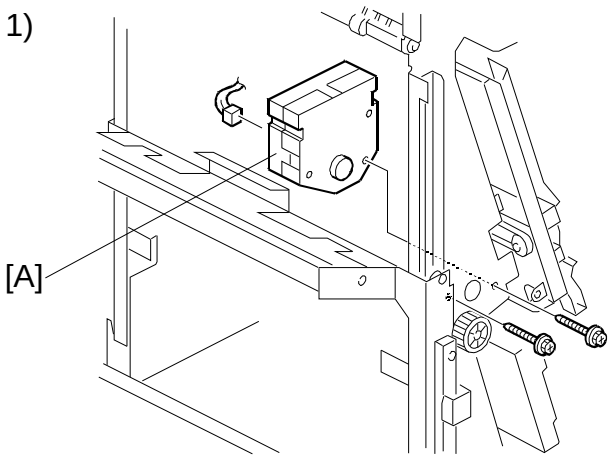

1.4.5 STACK FEED-OUT MOTOR

1. Stack feed-out motor [A] (☞ x 2, ☞ x 1)

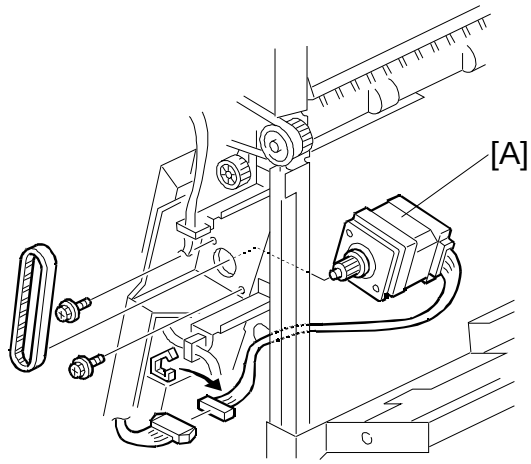

WWW.SERVICE-MANUAL.NET

2. TROUBLESHOOTING

2.1 JAM DETECTION

Mode		Jam	Content
Shift	Staple		
✔	✔	Entrance sensor: On check	The entrance sensor does not turn on within the normal time after the main machine exit sensor turns on
✔	✔	Entrance sensor: Off check	The entrance sensor does not turn off within the normal time after it turns on.
✔		Lower tray exit sensor: On check	The lower tray exit sensor does not turn on within the normal time after the entrance sensor turns off.
✔		Tray exit sensor: Off check	The tray exit sensor does not turn off within the normal time after it turns on.
	✔	Stapler tray entrance sensor: On check	The stapler tray entrance sensor does not switch on within the normal time after the entrance sensor switched on.
	✔	Stapler tray entrance sensor: Off check	The staple tray entrance sensor does not turn off within the normal time after it turns on.
	✔	Lower tray exit sensor: On check	The lower exit sensor does not turn on after the feed-out pawl feeds out the outputs.
	✔	Lower tray exit sensor: Off check	The lower exit sensor turns on when the feed-out pawl returns to its home position after feeding out the outputs.

WWW.SERVICE-MANUAL.NET

3. SERVICE TABLES

3.1 DIP SWITCH SETTINGS

The DIP switches should not be set to any combination other than those listed in the table below.

SW100		Description
1	2	
0	0	Normal operation mode (Default)
1	0	Packing mode.

- Before packing the machine, do the following: Set switch 1 to 1 then back to zero. The lower tray moves to the lowest position. Then turn off the main switch.
- After unpacking the machine, do the following: After turning the main switch back on, the lower tray returns to home position automatically.

WWW.SERVICE-MANUAL.NET

4. DETAILED DESCRIPTIONS

4.1 GENERAL LAYOUT

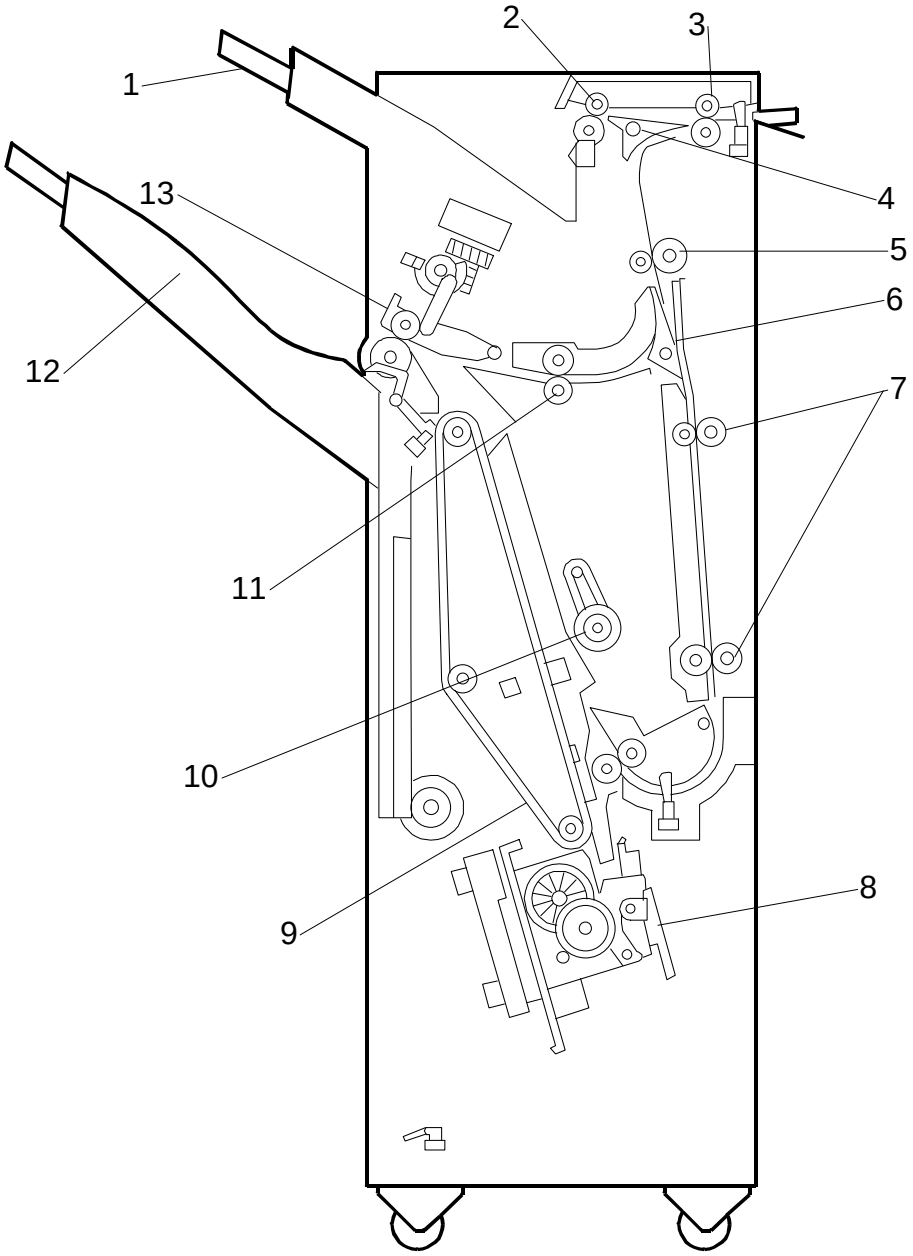

1. Upper Tray
2. Upper Tray Exit Roller
3. Entrance Roller
4. Tray Junction Gate
5. Upper Transport Roller
6. Stapler Junction Gate
7. Lower Transport Rollers
8. Stapler
9. Stack Feed-out Belt
10. Positioning Roller
11. Shift Roller
12. Lower Tray
13. Lower Tray Exit Roller

WWW.SERVICE-MANUAL.NET

4.2 ELECTRICAL COMPONENT LAYOUT

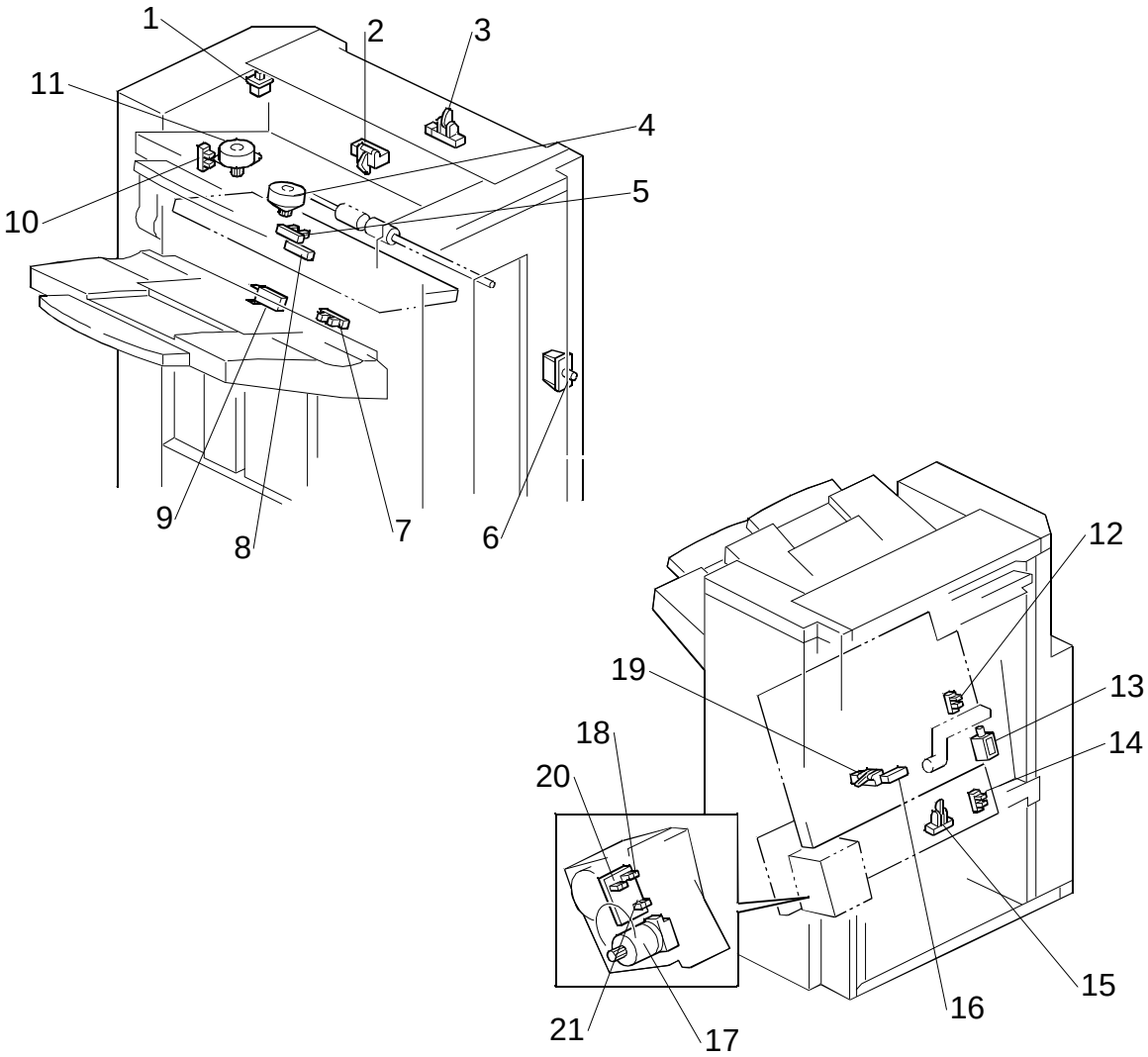

1. Upper Cover Switch
2. Paper Limit Sensor
3. Entrance Sensor
4. Exit Guide Plate Motor
5. Exit Guide Plate HP Sensor
6. Front Door Safety Switch
7. Stack Height Sensor
8. Lower Tray Exit Sensor
9. Lower Tray Upper Limit Switch
10. Shift HP Sensor
11. Shift Motor
12. Jogger Fence HP Sensor
13. Positioning Roller Solenoid
14. Stapler HP Sensor
15. Stapler Tray Entrance Sensor
16. Stapler Tray Paper Sensor
17. Stapler Hammer Motor
18. Staple Sheet Sensor
19. Stack Feed-out Belt HP Sensor
20. Stapler Rotation HP Sensor
21. Staple Sensor

WWW.SERVICE-MANUAL.NET

ELECTRICAL COMPONENT LAYOUT

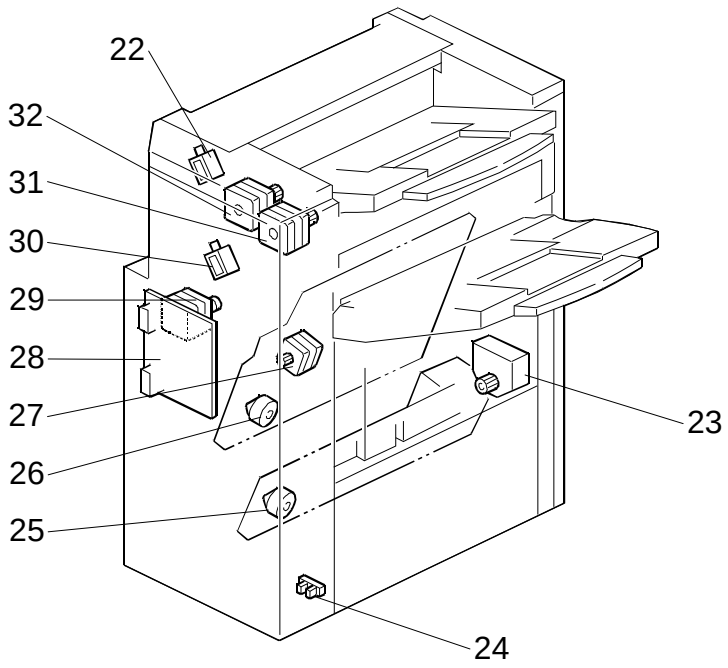

22. Tray Junction Gate Solenoid
23. Lower Tray Lift Motor
24. Lower Tray Lower Limit Sensor
25. Stapler Motor
26. Jogger Fence Motor
27. Stack Feed-out Motor
28. Main Board
29. Lower Transport Motor
30. Stapler Junction Gate Solenoid
31. Exit Motor
32. Upper Transport Motor

WWW.SERVICE-MANUAL.NET

4.3 ELECTRICAL COMPONENT DESCRIPTION

Symbol	Name	Function	Index No.
Motors			
M1	Upper Transport	Drives the entrance roller and upper transport rollers.	32
M2	Lower Transport	Drives the lower transport rollers and the positioning roller.	29
M3	Jogger Fence	Drives the jogger fences.	26
M4	Staple Hammer	Drives the staple hammer.	17
M5	Stack Feed-out	Drives the stack feed-out belt.	27
M6	Exit Guide Plate	Opens and closes the exit guide plate.	4
M7	Exit	Drives the exit roller.	31
M8	Lower Tray Lift	Moves the lower tray up or down.	23
M9	Shift	Moves the shift roller from side to side.	11
M10	Stapler	Moves the stapler unit from side to side.	25
Sensors			
S1	Entrance	Detects copy paper entering the finisher and checks for misfeeds.	3
S2	Paper Limit	Detects when the paper stack height in the upper tray is at its limit.	2
S3	Jogger Fence HP	Detects when the jogger fence is at home position.	12
S4	Shift HP	Detects when the shift roller is at home position.	10
S5	Stack Feed-out Belt HP	Detects when the stack feed-out belt is at home position.	19
S6	Stapler HP	Detects when the stapler is at home position.	14
S7	Exit Guide Plate HP	Detects when the exit guide plate is at home position.	5
S8	Stapler Tray Entrance	Detects copy paper entering the stapler tray and checks for misfeeds.	15
S9	Lower Tray Exit	Checks for misfeeds.	8
S10	Stack Height	Detects the top of the copy paper stack.	7
S11	Lower Tray Lower Limit	Detects when the lower tray is at its lower limit position.	24
S12	Stapler Tray Paper	Detects when there is copy paper in the stapler tray.	16
S13	Staple Sheet	Detects the leading edge of the staple sheet.	18
S14	Stapler Rotation HP	Detects when the staple hammer is at home position.	20
S15	Staple	Detects whether there are staples in the staple cartridge.	21
Solenoids			
SOL1	Tray Junction Gate	Drives the tray junction gate.	22
SOL2	Stapler Junction Gate	Drives the stapler junction gate.	30

WWW.SERVICE-MANUAL.NET

ELECTRICAL COMPONENT DESCRIPTION

Symbol	Name	Function	Index No.
SOL3	Positioning Roller	Moves the positioning roller.	13
Switches			
SW1	Lower Tray Upper Limit	Detects when the lower tray is at its upper limit position.	9
SW2	Front Door Safety	Cuts the dc power when the front door is opened.	6
SW3	Upper Cover	Cuts the dc power when the upper cover is opened.	1
PCBs			
PCB1	Main	Controls the finisher and communicates with the copier/printer.	28

WWW.SERVICE-MANUAL.NET

4.4 DRIVE LAYOUT

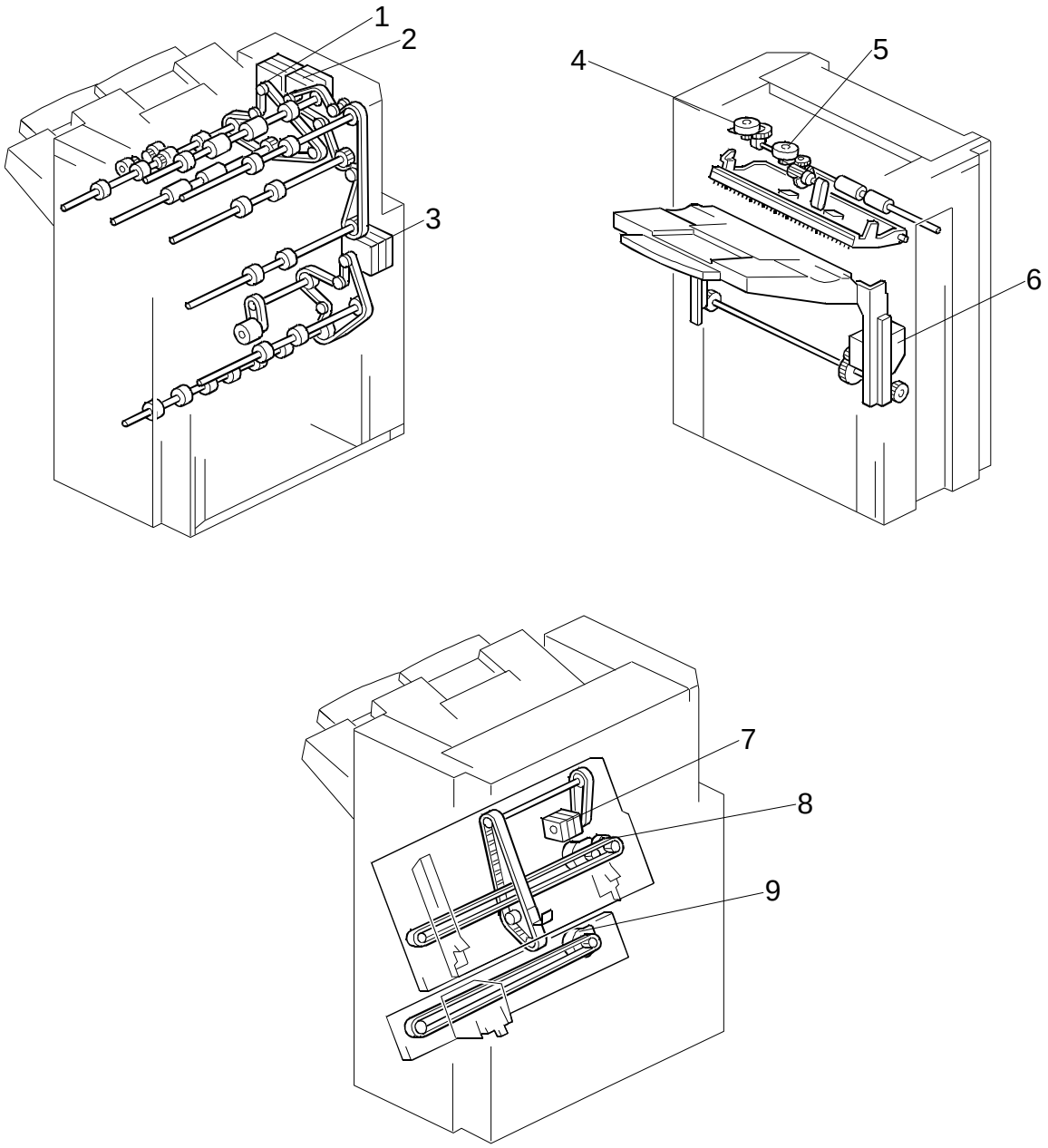

1. Exit Motor
2. Upper Transport Motor
3. Lower Transport Motor
4. Shift Motor
5. Exit Guide Plate Motor
6. Lower Tray Lift Motor
7. Stack Feed-out Motor
8. Jogger Motor
9. Stapler Motor

WWW.SERVICE-MANUAL.NET

4.5 JUNCTION GATES

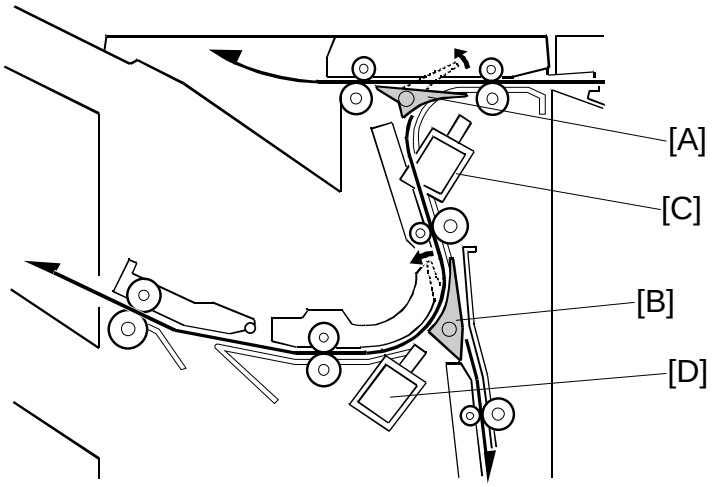

Depending on the finishing mode, the copies are directed up, straight through, or down by the combination of the tray junction gate [A] and stapler junction gate [B]. These gates are controlled by the tray junction gate solenoid [C] and stapler junction gate solenoid [D].

Upper Tray Mode

The tray junction gate solenoid remains off. The copies go up to the upper tray.

Sort/Stack Mode

The tray junction gate solenoid turns on and the stapler junction gate solenoid remains off. The copies are sent to the lower tray directly.

Staple Mode

The tray junction gate solenoid and the stapler junction gate solenoid both turn on.

The copies go down to the jogger unit.

WWW.SERVICE-MANUAL.NET

4.6 UPPER TRAY

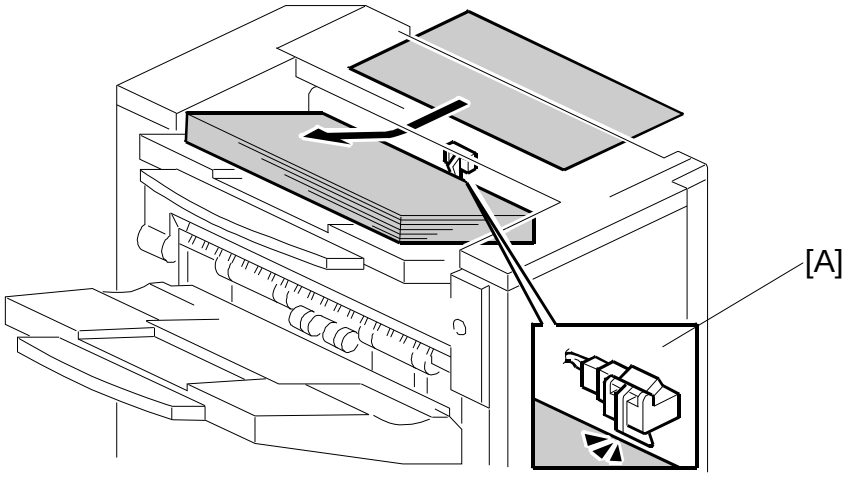

When the paper limit sensor [A] switches on during feed-out for each of three consecutive sheets of paper, paper overflow is detected.

WWW.SERVICE-MANUAL.NET

4.7 LOWER TRAY UP/DOWN MECHANISMS

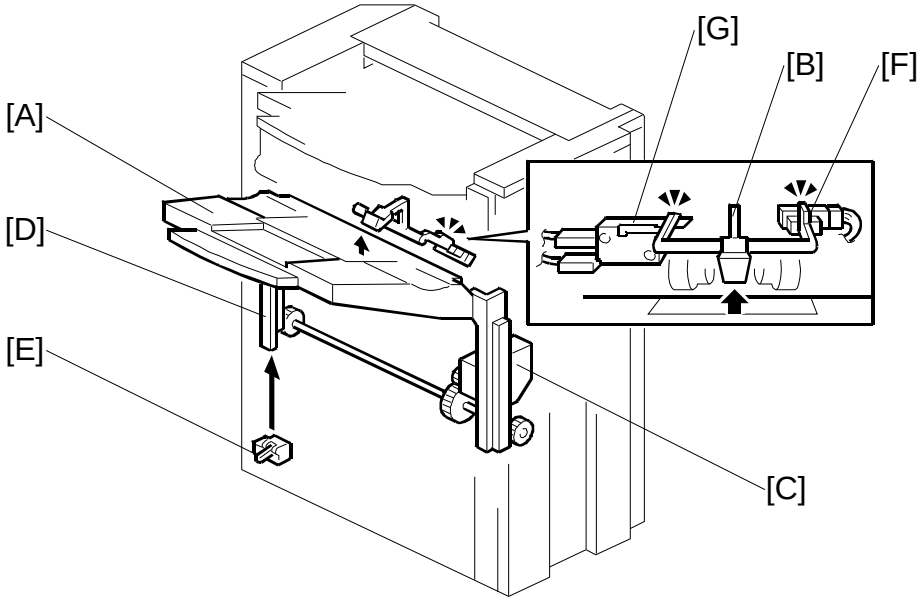

The vertical position of the lower tray [A] depends on the height of the copied paper stack on the lower tray. The stack height sensor feeler [B] contacts the top of the stack, and the lower tray lift motor [C] controls the tray height.

When the lower tray reaches its lowest possible position, the actuator [D] turns on the lower tray lower limit sensor [E], and copying stops.

Tray Up

When the copy paper on the tray is removed, the stack height sensor [F] turns off and the tray lifts up. Then, the tray stops when the sensor turns on again (the tray pushes up the feeler).
If the stack height sensor fails, the lower tray upper limit switch [G] detects the tray and stops the motor. This is a safety measure against stack height sensor failure.

Sort/Stack Mode (Tray Down)

Every five sheets of paper, the tray goes down until the sensor turns off again. Then, it goes up until the sensor is on again.

Staple Mode (Tray Down)

After a stapled copy is fed out, the tray goes up for 220 ms and stops for 300 ms. Then, it goes down for 1 second, waits for 500 ms, then goes up until the sensor turns on.

WWW.SERVICE-MANUAL.NET

4.8 PAPER SHIFT MECHANISM

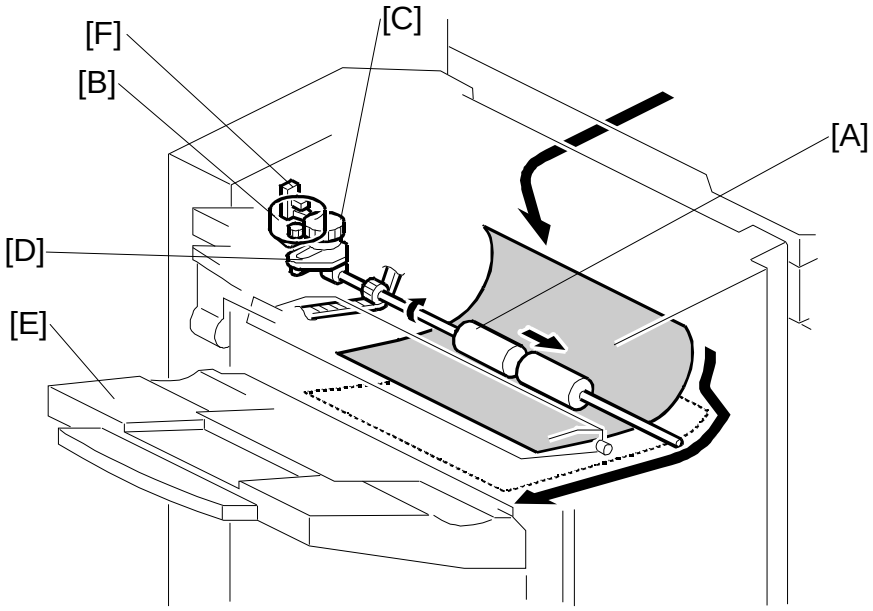

In the sort/stack mode, the shift roller [A] moves from side to side to separate the sets of copies.

The horizontal position of the shift roller is controlled by the shift motor [B] and the shift gear disk [C]. After the trailing edge of the copy passes the upper transport roller, the shift motor turns on, driving the shift gear disk and the link [D].

After the paper is delivered to the lower tray [E], the shift roller moves to its home position, which is detected by the shift HP sensor [F]. Then, when the trailing edge of the next copy passes the upper transport roller, the shift roller shifts again. This operation is done every sheet.

When the trailing edge of each page in the next set of copies passes the upper transport roller, the shift roller shifts in the opposite direction.

WWW.SERVICE-MANUAL.NET

4.9 JOGGER UNIT PAPER POSITIONING MECHANISM

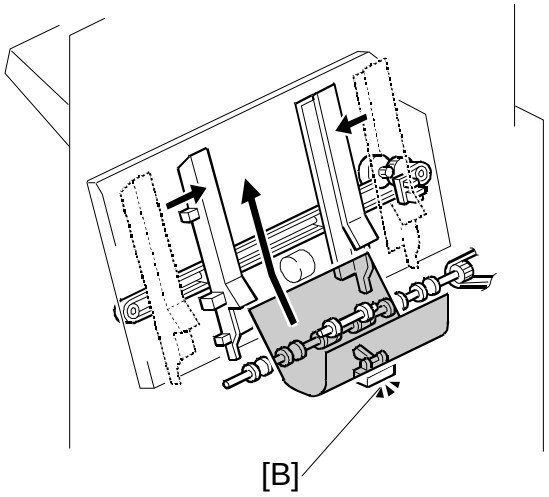

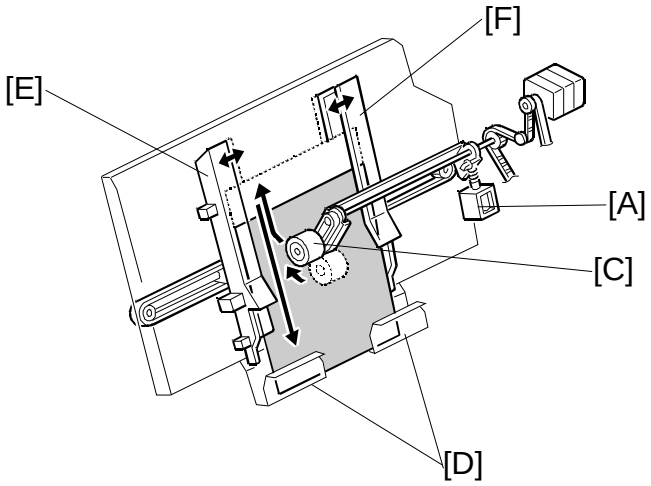

In staple mode, each sheet of copy paper is vertically and horizontally aligned when it arrives in the jogger unit.

For the vertical paper alignment, the positioning roller solenoid [A] turns on shortly after the stapler tray entrance sensor [B] turns off, and the positioning roller [C] pushes the copy against the bottom of the stack stopper [D].

For the horizontal paper alignment, the jogger front fence [E] and the rear fence [F] move to the waiting position, which is 18 mm away from the side of the paper. When aligning the paper vertically, the jogger fence moves in 14 mm from the waiting position. After the vertical position has been aligned, the jogger fence pushes the paper 4 mm against the rear fence to align the paper horizontally. Then the jogger fence moves back to the previous position.

WWW.SERVICE-MANUAL.NET

4.10 EXIT GUIDE PLATE

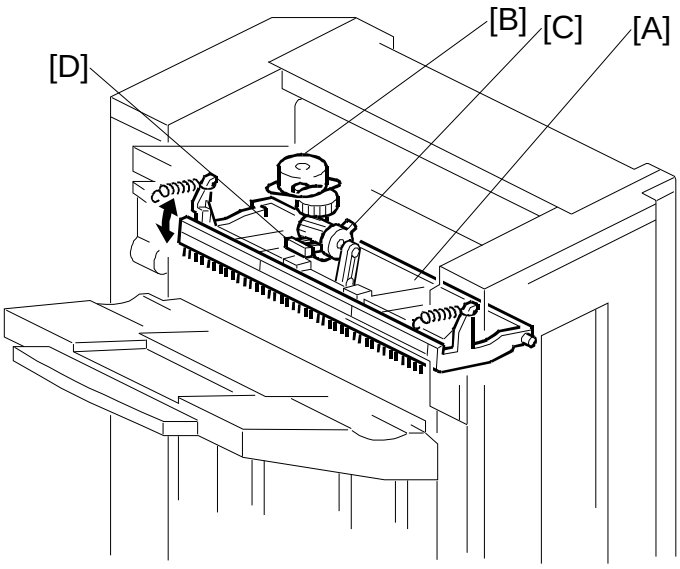

When stacking a large size of paper (such as A3, DLT) in the jogger unit, the leading edge of the paper reaches the exit rollers. To prevent the paper from running into the exit rollers and not being aligned correctly, the exit guide plate [A] is moved up to make a gap between the exit rollers. This operation is done for all paper sizes, but is only needed for the larger sizes.

The exit guide plate motor [B] and exit roller release cam [C] control the exit guide plate movement. When the exit guide plate motor starts, the cam turns and the exit guide plate moves up. When stapling is finished, the exit guide plate motor turns on again to close the exit guide plate. When the exit guide plate HP sensor [D] turns on, the motor stops.

WWW.SERVICE-MANUAL.NET

4.11 STAPLER MECHANISM

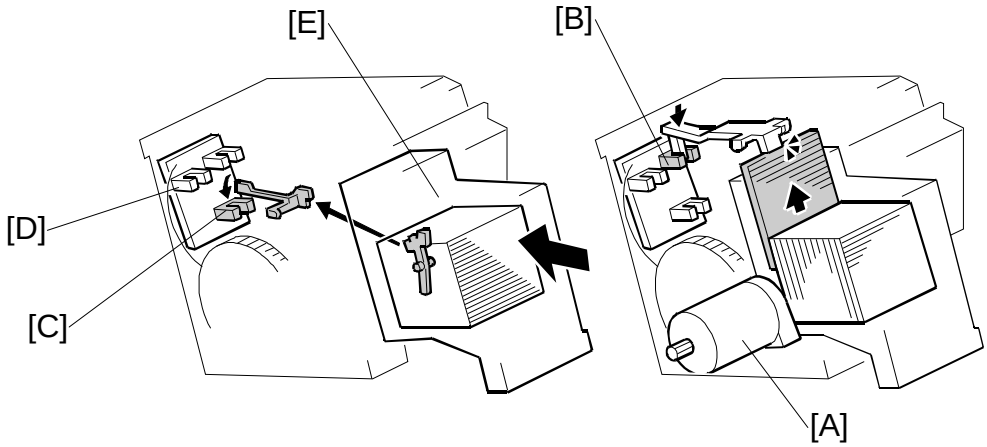

The staple hammer motor [A] drives the staple hammer.

The staple sheet sensor [B] detects the leading edge of the staple sheet at the stapling position to prevent the hammer from operating if there are no staples at the stapling position.

If there is no staple cartridge in the stapler unit or no staples in the staple cartridge, staple end is indicated on the operation panel. The stapler sensor [C] detects this.

The stapler rotation HP sensor [D] checks whether the staple hammer mechanism returns to home position after each stack has been stapled.

When excessive load is applied to the staple hammer motor, the copier detects a staple jam. When a staple jam has occurred, the jammed staple is inside the staple cartridge [E]. Therefore, the jammed staple can be removed easily after pulling out the staple cartridge.

WWW.SERVICE-MANUAL.NET

4.12 STAPLER UNIT MOVEMENT MECHANISM

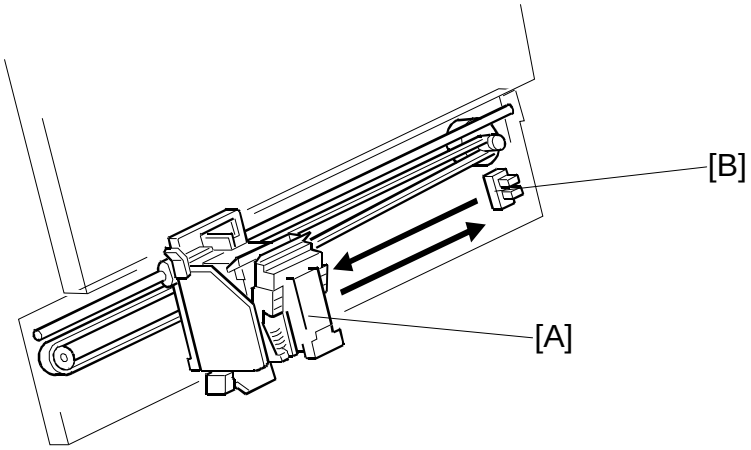

The stapler motor moves the stapler [A] from side to side. After the start key is pressed, the stapler moves from its home position to the stapling position.

If two-staple-position mode is selected, the stapler moves to the front stapling position first, then moves to the rear stapling position. However, for the next copy set, it staples in the reverse order (at the rear side first, then at the front side).

After the job is completed, the stapler moves back to its home position. The stapler HP sensor [B] detects this.

WWW.SERVICE-MANUAL.NET

4.13 PAPER FEED-OUT MECHANISM

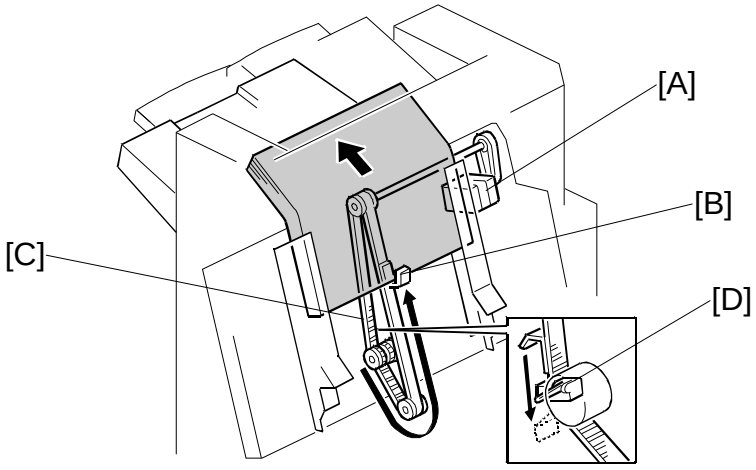

After the copies have been stapled, the stack feed-out motor [A] starts. The pawl [B] on the stack feed-out belt [C] transports the set of stapled copies up and feeds it to the shift roller. The shift roller takes over stack feed-out after the leading edge reaches this roller.

Just before the stapled stack passes through the lower tray exit sensor, the stack-feed-out motor turns off until the shift rollers have completely fed the stack out to the lower tray. Then, the stack-feed-out motor turns on again until the pawl [B] actuates the stack feed-out belt home position sensor [D].

WWW.SERVICE-MANUAL.NET

WWW.SERVICE-MANUAL.NET

BOOKLET FINISHER & FINISHER SR3020/SR3030/SR4010/SR4020 B804/B805/D373/D374

D373/D374 SADDLE STITCH FINISHER SR4010/4020 REVISION HISTORY		
Page	**Date**	**Added/Updated/New**
		None

WWW.SERVICE-MANUAL.NET

WWW.SERVICE-MANUAL.NET

BOOKLET FINISHER & FINISHER SR3020/SR3030/SR4010/SR4020

TABLE OF CONTENTS

1. REPLACEMENT AND ADJUSTMENT 1

1.1 COVERS 1

1.1.1 EXTERIOR COVERS 1

1.1.2 UPPER TRAY, END FENCE 2

1.2 MAIN UNIT 3

1.2.1 UPPER TRAY LIMIT SENSOR, LIMIT SWITCH 3

1.2.2 POSITIONING ROLLER 4

1.2.3 PROOF TRAY EXIT SENSOR 4

1.2.4 UPPER TRAY HEIGHT SENSORS 1, 2 5

1.2.5 EXIT GUIDE PLATE, UPPER TRAY EXIT SENSOR 5

1.2.6 PROOF TRAY FULL SENSOR 6

1.2.7 FINISHER ENTRANCE SENSOR 7

1.2.8 PRE-STACK TRAY EXIT SENSOR 7

1.3 STAPLER UNIT 8

1.3.1 CORNER STAPLER 8

1.3.2 POSITIONING ROLLER 9

1.4 FOLD UNIT 10

1.4.1 FOLD UNIT 10

1.4.2 FOLD UNIT ENTRANCE SENSOR 12

1.4.3 FOLD UNIT EXIT SENSOR 12

1.4.4 STACK PRESENT SENSOR 13

1.4.5 FOLDING HORIZONTAL SKEW ADJUSTMENT (FOR B804 ONLY) 14

1.4.6 FOLD VERTICAL SKEW ADJUSTMENT (FOR B804 ONLY) 17

1.5 BOOKLET STAPLER UNIT 19

1.5.1 BOOKLET STAPLER 19

1.5.2 BOOKLET STAPLER MOTOR 19

2. DETAILED SECTION DESCRIPTIONS 22

2.1 COMPONENT LAYOUT 22

WWW.SERVICE-MANUAL.NET

2.1.1 GENERAL LAYOUT 22
2.1.2 ELECTRICAL COMPONENTS 24
2.1.3 SUMMARY OF ELECTRICAL COMPONENTS 28
2.1.4 DRIVE LAYOUT 38
2.2 JUNCTION GATES 40
2.2.1 PROOF MODE 40
2.2.2 SHIFT MODE 40
2.2.3 STAPLE MODE 41
2.3 PRE-STACKING 42
2.4 TRAY MOVEMENT MECHANISM 44
2.4.1 UPPER TRAY 44
2.4.2 LOWER TRAY (B804 ONLY) 46
2.5 CORNER STAPLING 49
2.5.1 STACKING AND JOGGING 49
2.5.2 STAPLER MOVEMENT 50
2.5.3 CORNER STAPLING 52
2.6 BOOKLET STAPLING (B804 ONLY) 53
2.6.1 BOOKLET PRESSURE MECHANISM 53
2.6.2 BOOKLET STAPLING AND FOLDING 54
2.6.3 BOOKLET STAPLING AND FOLDING MECHANISMS 60
2.7 UPPER TRAY OUTPUT 63
2.7.1 FEED OUT 63
2.7.2 FEED OUT STACKING 64
2.8 PUNCH UNIT B702 (FOR B804/B805) 65
2.8.1 OVERVIEW OF OPERATION 65
2.8.2 PUNCH MECHANISMS 67
2.8.3 PUNCH HOPPER MECHANISM 70
2.9 FINISHER JAM DETECTION 72

WWW.SERVICE-MANUAL.NET

Read This First

Safety and Symbols

Replacement Procedure Safety

⚠CAUTION

- Turn off the main power switch and unplug the machine before beginning any of the replacement procedures in this manual.

Symbols Used in this Manual

This manual uses the following symbols.

☛: See or Refer to

: Screws

: Connector

: Clip ring

: E-ring

WWW.SERVICE-MANUAL.NET

WWW.SERVICE-MANUAL.NET

1. REPLACEMENT AND ADJUSTMENT

1.1 COVERS

1.1.1 EXTERIOR COVERS

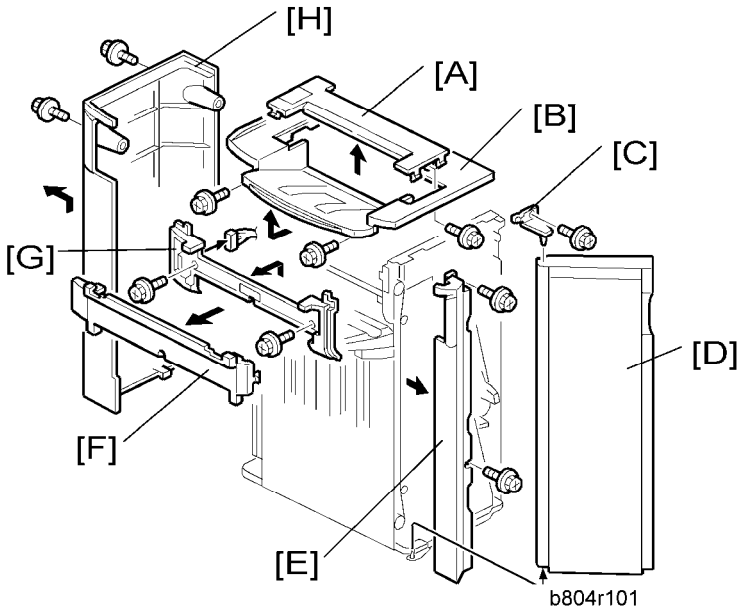

1. Open the front door [D].
2. Small upper cover [A] (☞ x1)
3. Upper cover [B] (☞ x2)
4. Front door bracket [C] (☞ x1)
5. Front door [D]
6. Front left side cover [E] (☞ x2)
7. Cover [F]
8. Paper exit cover [G] (☞ x2)
9. Rear cover [H] (☞ x2)

WWW.SERVICE-MANUAL.NET

1.1.2 UPPER TRAY, END FENCE

1. Remove the rear cover. (* "Exterior Covers")

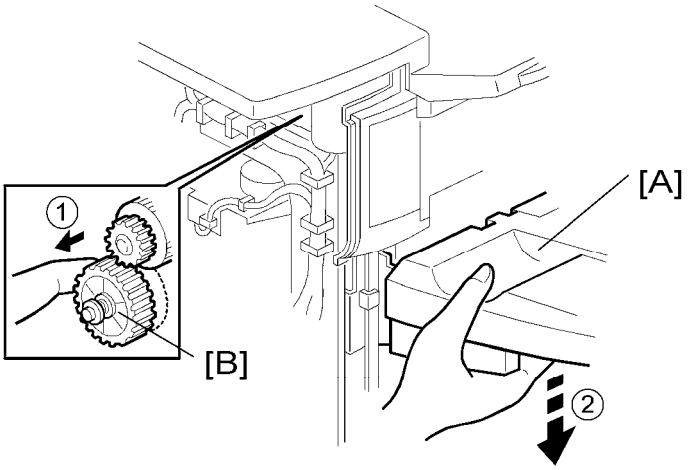

b804r114

1. Support the tray [A] with your right hand.
2. Pull gear [B] toward you ① to release.
3. Slowly lower the tray ② until it stops.

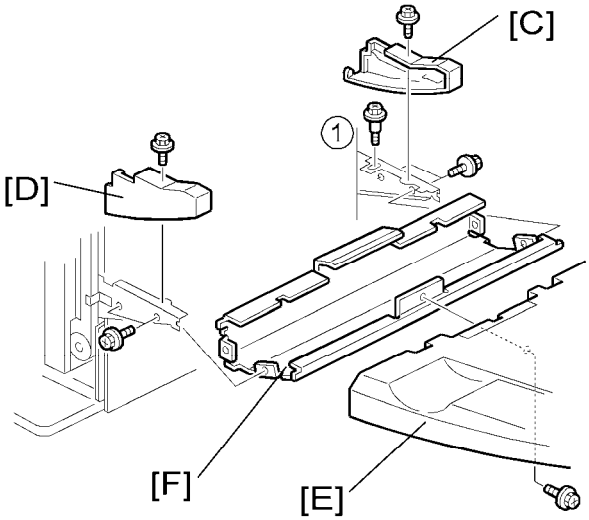

b804r115

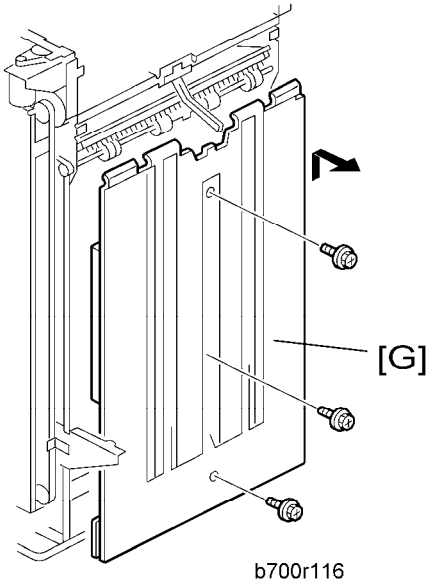

b700r116

4. Front side cover [C] (🔩 x1)
5. Rear side cover [D] (🔩 x1)
6. Upper tray [E] (🔩 x1)
7. Tray bracket [F] (🔩 x4, 🔩 x1 shoulder screw ①)
8. End Fence [G](🔩 x3)

WWW.SERVICE-MANUAL.NET

1.2 MAIN UNIT

1.2.1 UPPER TRAY LIMIT SENSOR, LIMIT SWITCH

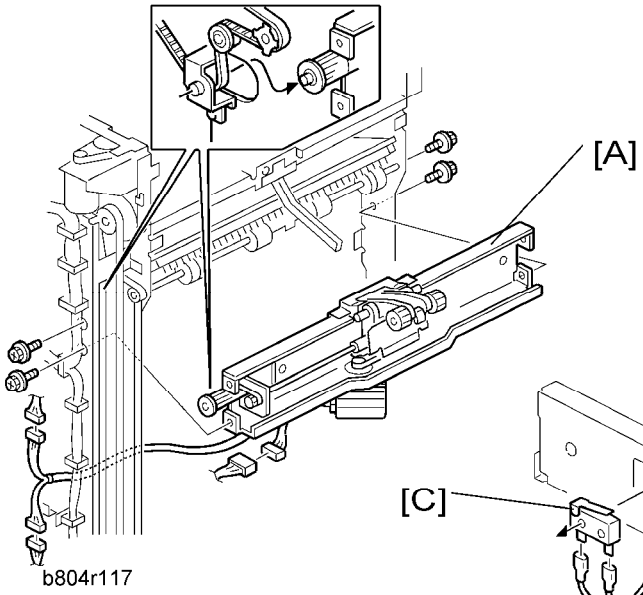

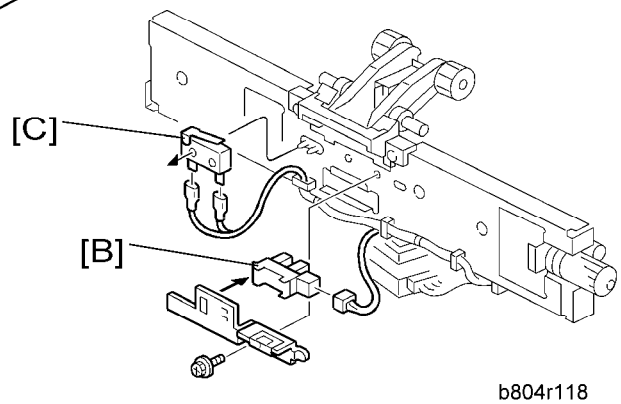

1. Front door, front left side cover, rear cover, upper cover (☛ "Exterior Cover")
2. End fence (☛1.1.2 "Upper Tray, End Fence")
3. Upper tray exit mechanism [A] (☞ x4, ☞ x3)
4. Upper tray limit sensor [B] (☞ x1, ☞ x1)
5. Upper tray limit switch [C] (☞ x2)

WWW.SERVICE-MANUAL.NET

1.2.2 POSITIONING ROLLER

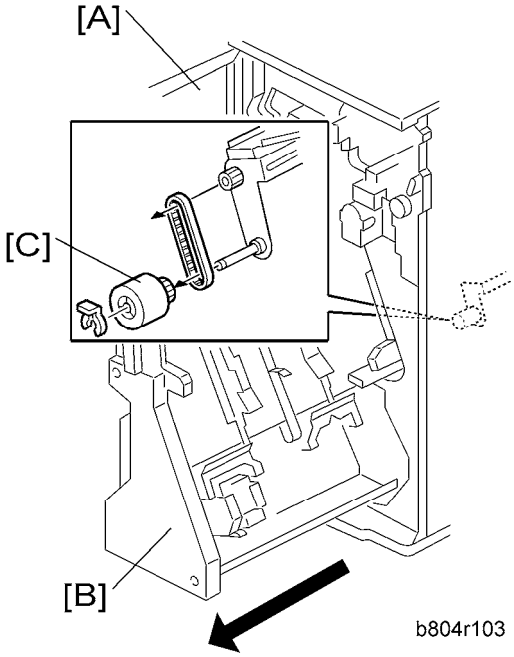

1. Open the front door [A].
2. Pull out the stapling unit [B].
3. Positioning roller [C] (x1, timing belt x1)

1.2.3 PROOF TRAY EXIT SENSOR

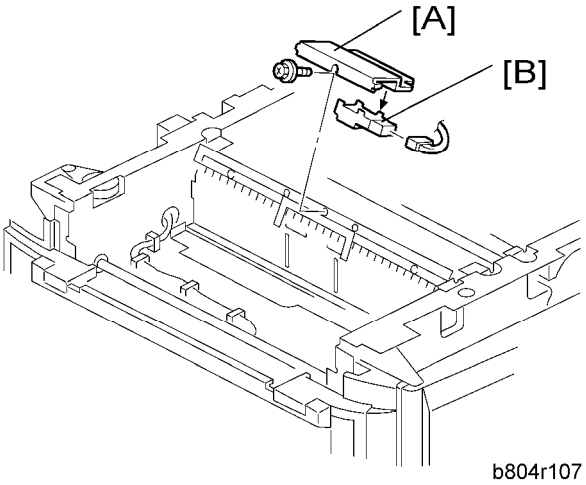

1. Small upper cover (1.1.1 "Exterior Cover")
2. Proof tray exit sensor bracket [A] (x1)

WWW.SERVICE-MANUAL.NET

Main Unit

3. Proof tray exit sensor [B] (☞ x1)

1.2.4 UPPER TRAY HEIGHT SENSORS 1, 2

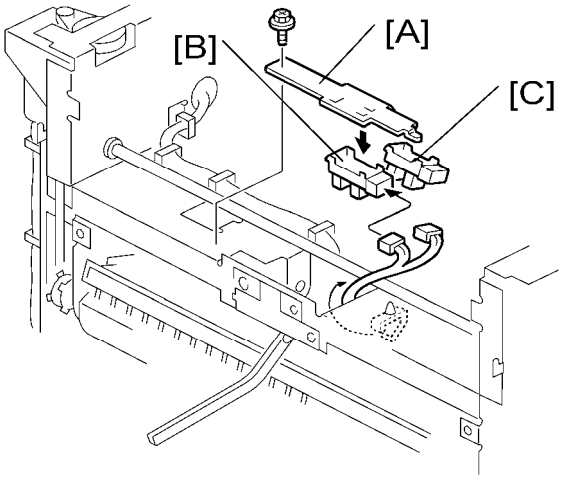

b804r108

1. Small upper cover, upper cover (☛1.1.1 "Exterior Cover")
2. Upper tray paper height sensor bracket [A] (✐ x1)
3. Upper tray paper height sensor [B] – staple mode (S08) (☞ x1)
4. Upper tray paper height sensor [C] – non-staple mode (S09) (☞ x1)

1.2.5 EXIT GUIDE PLATE, UPPER TRAY EXIT SENSOR

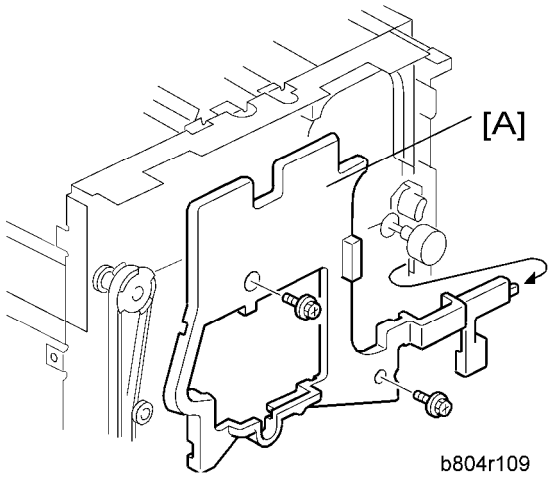

b804r109

1. Rear cover, Upper covers, Front door, Cover, Paper exit cover (☛1.1.1 "Exterior Cover")
2. Inner cover [A] (✐ x2)

WWW.SERVICE-MANUAL.NET

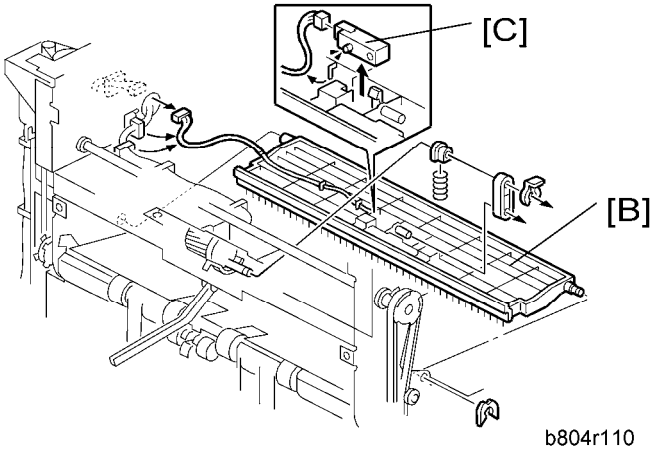

3. Exit guide plate [B] (x1, Link and spring, x1, x1)
4. Upper tray exit sensor [C] (S6) (x1)

1.2.6 PROOF TRAY FULL SENSOR

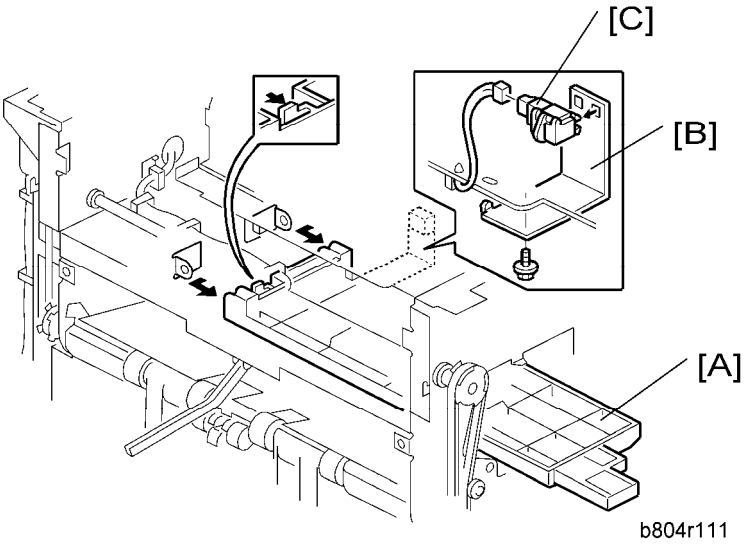

1. Exit guide plate. (1.2.5 "Exit Guide Plate, Upper Tray Exit Sensor")
2. Guide plate [A] (hook x 2)
3. Sensor bracket [B] (x1)
4. Proof tray full sensor [C] (S11) (x1)

WWW.SERVICE-MANUAL.NET

1.2.7 FINISHER ENTRANCE SENSOR

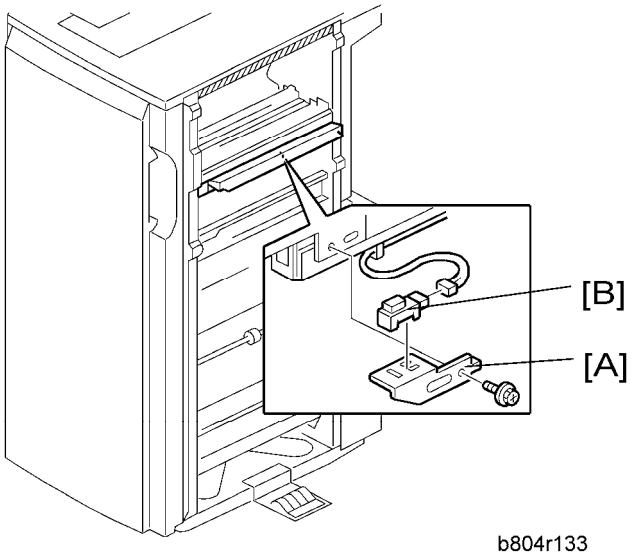

1. Disconnect the finisher if it is connected to the copier.
2. Sensor bracket [A] (🔩 x1)
3. Finisher entrance sensor [B] (S1) (🔌 x1)

1.2.8 PRE-STACK TRAY EXIT SENSOR

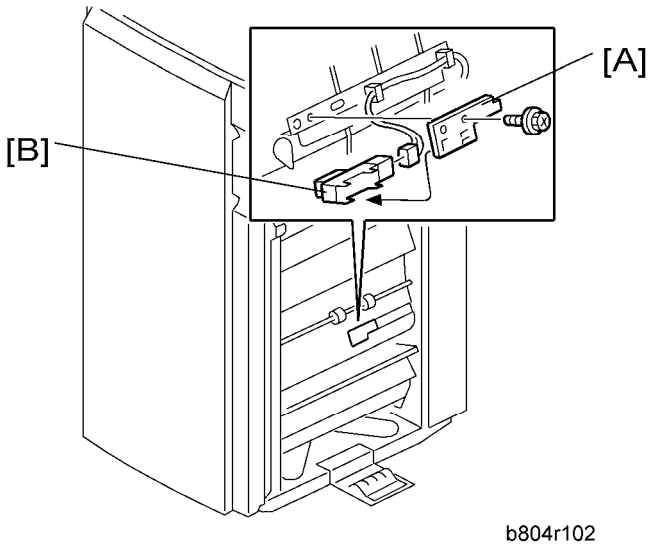

1. Disconnect the finisher if it is connected to the copier.
2. Sensor bracket [A]
3. Pre-stack tray exit sensor [B] (S2)

WWW.SERVICE-MANUAL.NET

1.3 STAPLER UNIT

1.3.1 CORNER STAPLER

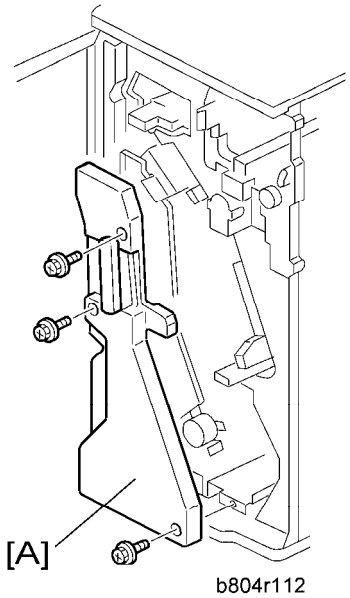

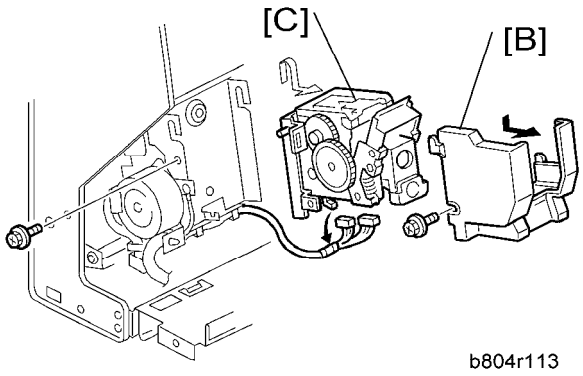

1. Open the front door.
2. Pull out the stapler unit.
3. Inner cover [A] (🔩 x3)
4. Stapler unit holder [B] (🔩 x1)
5. Corner stapler [C] (M20) (🔩 x1)

WWW.SERVICE-MANUAL.NET

1.3.2 POSITIONING ROLLER

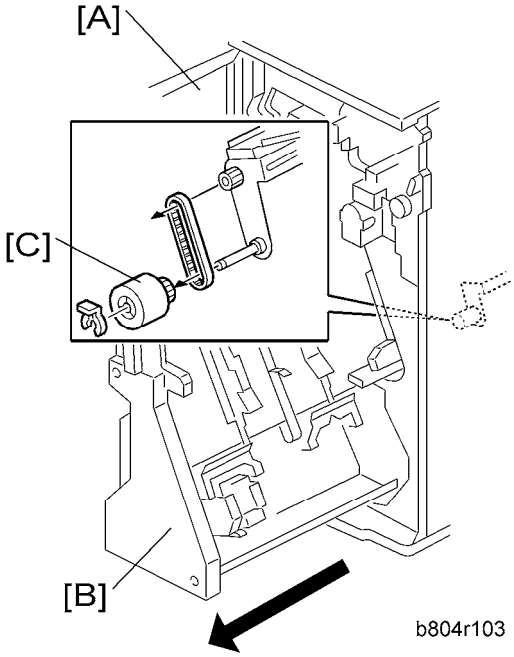

1. Open the front door [A].
2. Pull out the stapling unit [B].
3. Positioning roller [C] (x1, timing belt x1)

WWW.SERVICE-MANUAL.NET

1.4 FOLD UNIT

1.4.1 FOLD UNIT

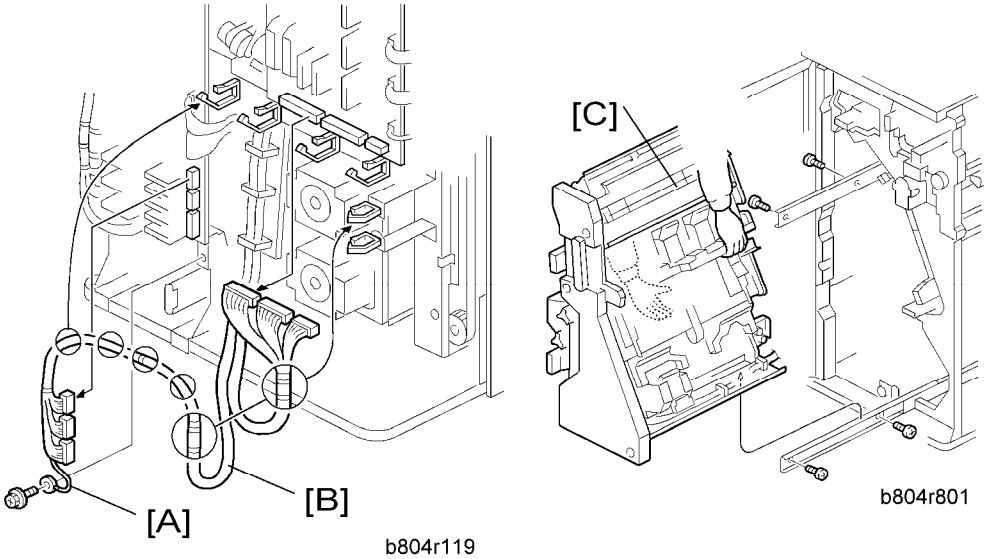

1. Remove the back cover (☛1.1.1 "Exterior Covers").
2. Open the front door.

⚠CAUTION

- The stapler unit is heavy.

3. Ground cable [A] (🔩 x1)
4. Harness [B] (🔌 x6, 🔌 x6)
5. Stapler unit [C] (🔩 x4)

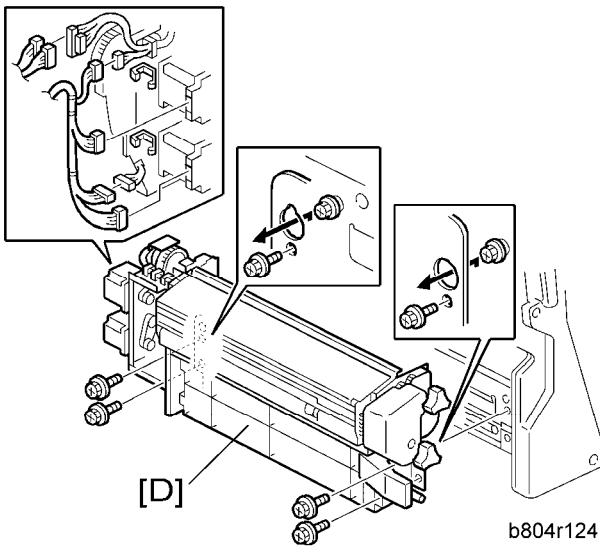

WWW.SERVICE-MANUAL.NET

Fold Unit

Important

- Support the fold unit with your hand to prevent it from falling.

CAUTION

- The fold unit is heavy.

6. Folding unit [D] (x4, x2, x6)

If you have replaced the folding unit:

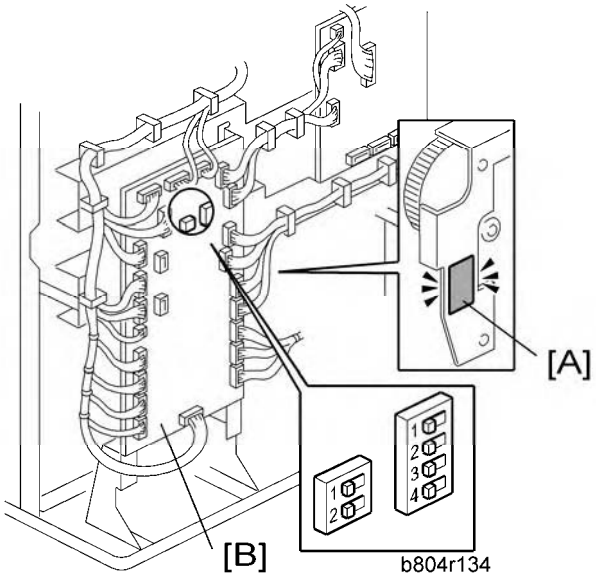

1. Read the DIP SW settings on the decal [A] attached to the back of the new folding unit.
2. Check the DIP SW settings on the main board [B] of the finisher.
3. If these settings are different, change these settings to match the settings printed on the decal attached to the folding unit.

Note

- Set DIP switches 1 to 4 (the switch set on the right). Do not touch the other DIP switches.

WWW.SERVICE-MANUAL.NET

1.4.2 FOLD UNIT ENTRANCE SENSOR

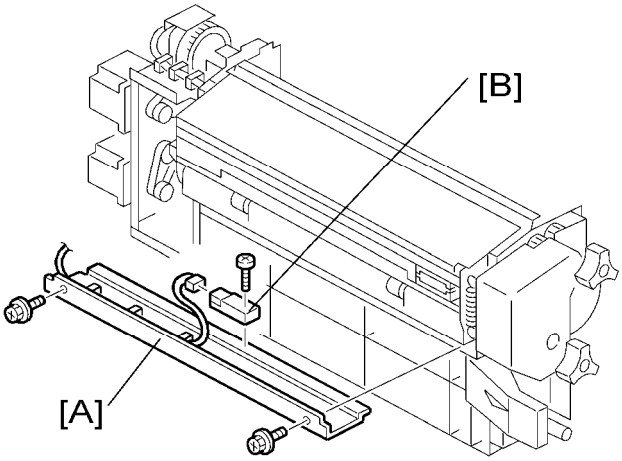

b804r132

1. Pull out the stapler unit (☛1.3.2 "Positioning Roller").
2. Fold unit entrance sensor bracket [A] (🔩 x2)
3. Fold unit entrance sensor [B] (S26) (🔩 x1, 🔌 x1)

1.4.3 FOLD UNIT EXIT SENSOR

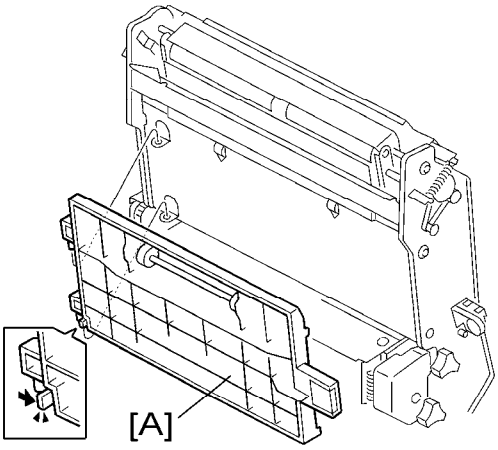

b804r121

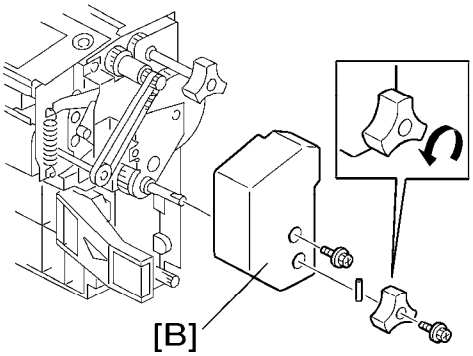

b804r125

1. Open the front door.
2. Pull out the stapler unit (☛1.3.2 "Positioning Roller").
3. Fold unit vertical guide plate [A]
4. Fold unit inner cover [B] (🔩 x2, Spring pin x1)

WWW.SERVICE-MANUAL.NET

Fold Unit

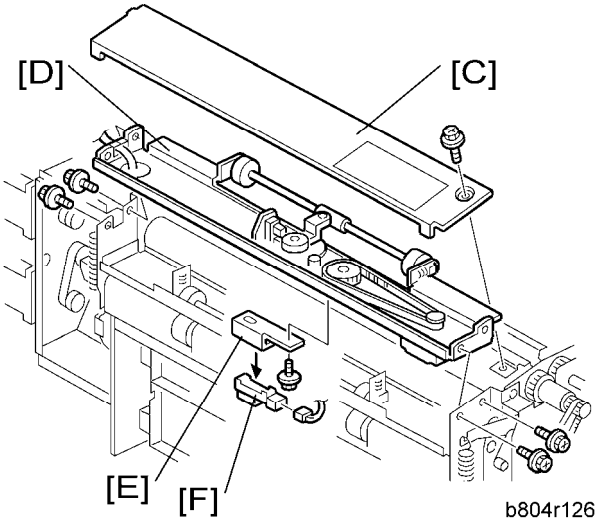

5. Fold unit upper cover [C] (x1)
6. Paper clamp mechanism [D] (x4)
7. Fold unit exit sensor bracket [E] (x1)
8. Fold unit exit sensor [F] (S31) (x1)

1.4.4 STACK PRESENT SENSOR

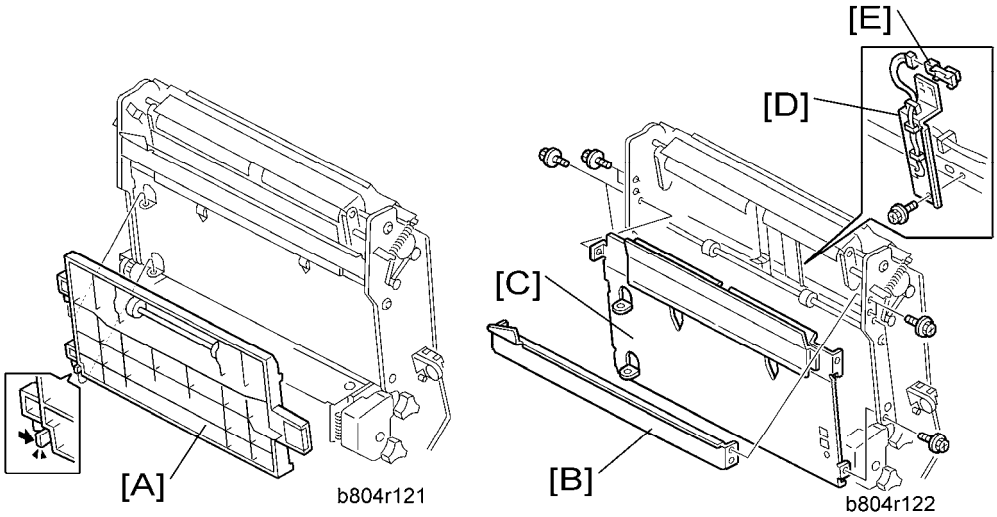

Important

- If you intend to correct the horizontal and vertical skew for the fold unit at the same time, do those adjustments first, then replace the sensor. (1.4.5 "Folding Horizontal Skew Adjustment" or "Fold Vertical Skew Adjustment")

1. Remove the stapler unit (1.4.1 "Fold Unit")

WWW.SERVICE-MANUAL.NET

2. Guide plate [A].
3. Stay [B] (x4)
4. Left plate [C] (x4)
5. Sensor bracket [D] (x1)
6. Stack present sensor [E] (S32) (x1)

1.4.5 FOLDING HORIZONTAL SKEW ADJUSTMENT (FOR B804 ONLY)

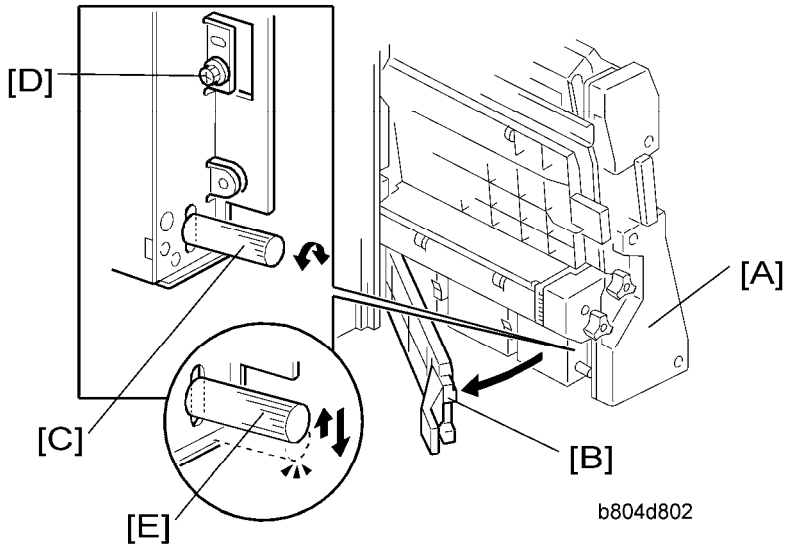

Important

- The fold unit is adjusted for optimum performance before the finisher is shipped from the factory. Do this adjustment only if the edges of folded booklets are not even.

1. Switch the copier on and enter the SP mode.
2. Europe, Asia: Use **SP6-134-001** (this is for A3 paper). North America: Use **SP6-134-005** (this is for DLT paper).

   Note

   - If the original setting of SP6-134-001 or -005 is not "0", then you must do the vertical skew adjustment (1.4.6 "Fold Vertical Skew Adjustment") after you finish this horizontal skew procedure.
3. Use the 10-key pad to input "-2" (mm) for the SP value. (Press to enter the minus sign.)
4. Press [#] then exit the SP mode.

WWW.SERVICE-MANUAL.NET

Fold Unit

5. Open the front door and pull the stapler unit [A] out of the finisher.
6. Open the guide plate [B].
7. Loosen the adjustment screw [C] and then tighten until it stops. (Do not over tighten.)
8. Remove the lock screw [D].
9. Raise the tip [E] of the adjustment screw very slightly and allow it to descend under its own weight.

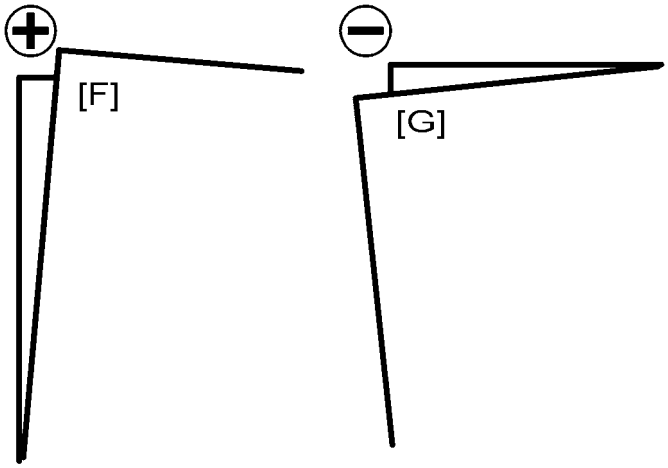

b804r901

10. Push the stapler unit into the finisher and close the front door.
11. Do a folding test.
    - Switch the copier on.
    - Put one page of A3 or DLT paper in the ARDF.
    - On the copier operation panel, select booklet stapling.
    - Press [Start]. One sheet is folded.
12. Remove the sheet from the lower tray.
13. Hold the folded sheet with the creased side pointing down and face-up (the same way that it came out of the finisher).
14. Referring to the diagram, determine if the skew is + [F] or - [G].

WWW.SERVICE-MANUAL.NET

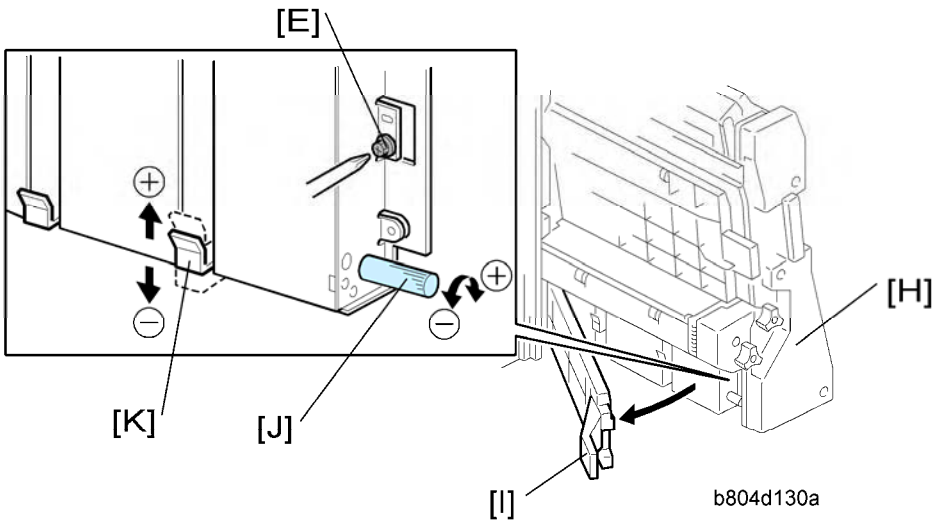

15. Open the front door of the finisher and pull the stapler unit [H] out.
16. Open the guide plate [I].
17. Turn the adjustment screw [J] to correct the amount of skew you measured from the test sheet.
    - For + skew [F], turn the adjustment screw (clockwise).
    - For – skew [G], turn the adjustment screw to the left (counter-clockwise).
    - Every click in the +/– direction adjusts the fold position by 0.1 mm by moving the bottom fence [K].
18. Raise the tip of the adjustment screw [J] and allow it to lower under its own weight.
19. Attach and tighten the lock screw [L].
20. Push the stapler unit into the machine, close the front door, then turn the copier on.
21. Europe, Asia: Do **SP6-134-001** (this is for A3 paper). North America: **Do SP6-134-005** (this is for DLT paper).
22. Reset it to "0".
23. Do the test again.
24. If the result is satisfactory, this completes the adjustment. -or- If some skew remains, repeat this adjustment.

Note

- After doing this adjustment, adjust for vertical skew, if necessary. (☛1.4.6 "Fold Vertical Skew Adjustment")

WWW.SERVICE-MANUAL.NET

1.4.6 FOLD VERTICAL SKEW ADJUSTMENT (FOR B804 ONLY)

Important

- The fold unit is adjusted for optimum performance before the finisher is shipped from the factory. Do this adjustment only if the edges of folded booklets are not even.

1. Switch the copier on.
2. Do a folding test.
   - Switch the copier on.
   - Put one page of A3 or DLT paper in the ARDF.
   - On the copier operation panel, select booklet stapling.
   - Press [Start]. One sheet is folded.
3. Hold the folded sheet with the creased side pointing down, and face-up (the same way that it came out of the finisher).

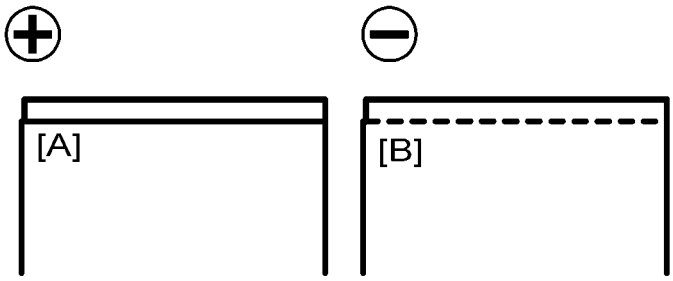

b804r902

4. Referring to the diagram, determine if the skew is positive [A] or negative [B].
5. Measure the amount of skew.
6. Enter the SP mode
   - Europe, Asia: Use **SP6-134-001** (this is for A3 paper).
   - North America: Use **SP6-134-005** (this is for DLT paper).
7. Enter one-half the measured amount of skew. Example: If the measure amount of skew is -1.2 mm, enter -0.6 mm

   Note

   - The range for measurement is –3.0 mm to +3.0 mm in 0.2 mm steps for every notch adjustment.
8. Exit the SP mode and do the test again (steps 2 to 5).
9. Repeat this procedure until the skew is corrected.

   The illustration below shows the effects of +/- adjustment with SP6113. (The vertical arrows show the direction of paper feed.)

WWW.SERVICE-MANUAL.NET

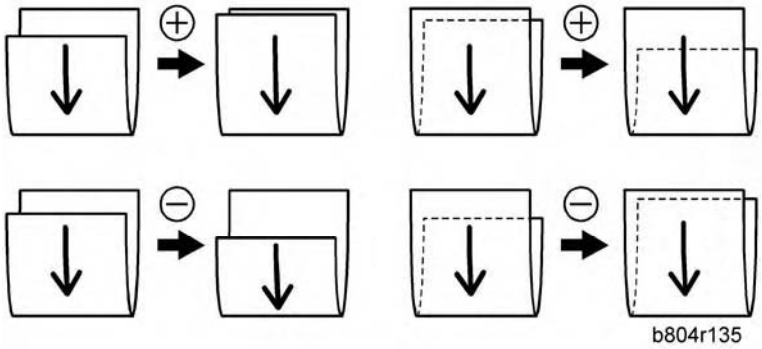

WWW.SERVICE-MANUAL.NET

1.5 BOOKLET STAPLER UNIT

1.5.1 BOOKLET STAPLER

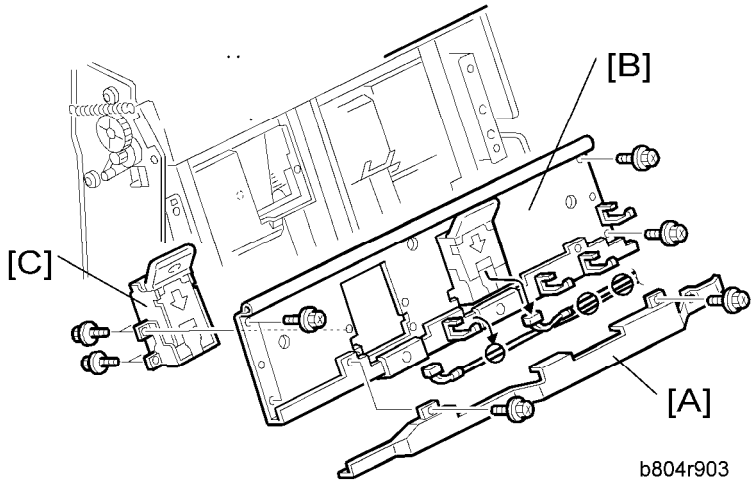

1. Open the front door.
2. Pull out the stapler unit (☛1.2.2 "Positioning Roller").
3. Harness cover [A] (🔩 x2)
4. Booklet stapler support stay [B] (🔩 x4, 🔩 x2, 🔩 x4)
5. Stapler [C] (🔩 x4)

1.5.2 BOOKLET STAPLER MOTOR

1. Open the front door.
2. Remove the stapler unit. (☛1.4.1 "Fold Unit")

WWW.SERVICE-MANUAL.NET

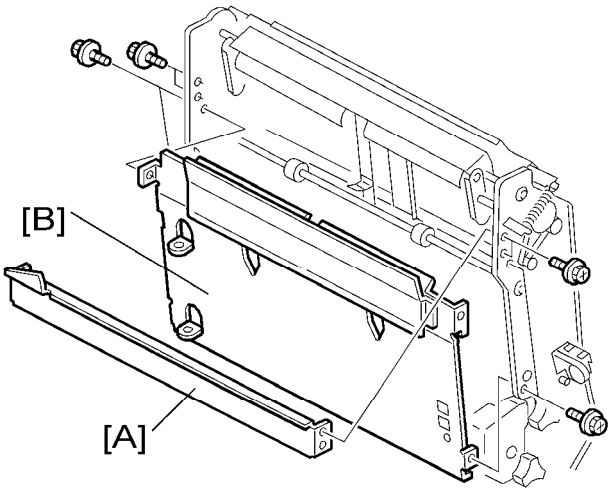

b804r122a

3. Stay [A] (x4).
4. Left plate [B] (x4)

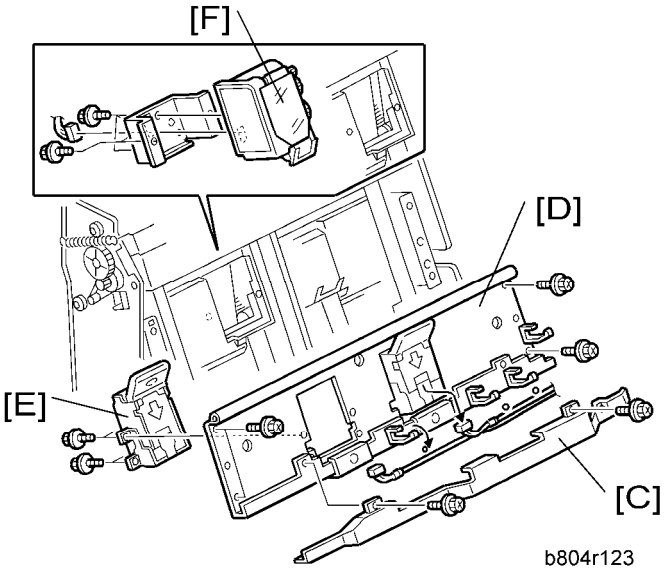

b804r123

5. Harness cover [C] (x2)
6. Booklet stapler support stay [D] (x4, x2, x4)
7. Booklet stapler [E] (x4)
8. Booklet stapler motor [F] (x2, x1)

To Reattach the Booklet Stapler Motor

1. Reattach the booklet stapler motor.

Important

- Do not tighten the screws.

WWW.SERVICE-MANUAL.NET

Booklet Stapler Unit

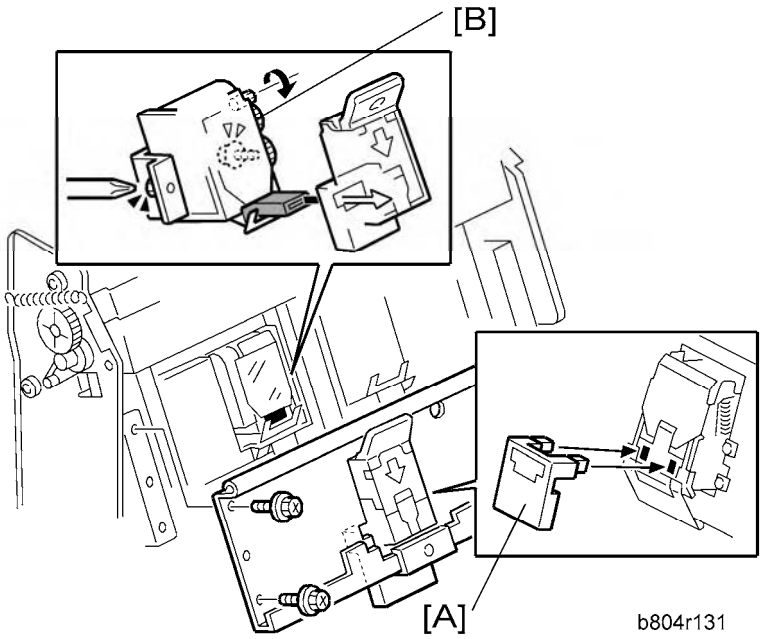

2. Attach the special tool [A] and reattach the booklet stapler stay.

   Note

   - This tool is included with the stapler spare part.
3. Turn the gear [B] with your finger until it stops.
4. Tighten the screws to attach to the booklet stapler motor.
5. Remove the stay again and remove the special tool.
6. Reattach the booklet stapler stay.
7. Push the stapler unit into the machine.

WWW.SERVICE-MANUAL.NET

2. DETAILED SECTION DESCRIPTIONS

2.1 COMPONENT LAYOUT

2.1.1 GENERAL LAYOUT

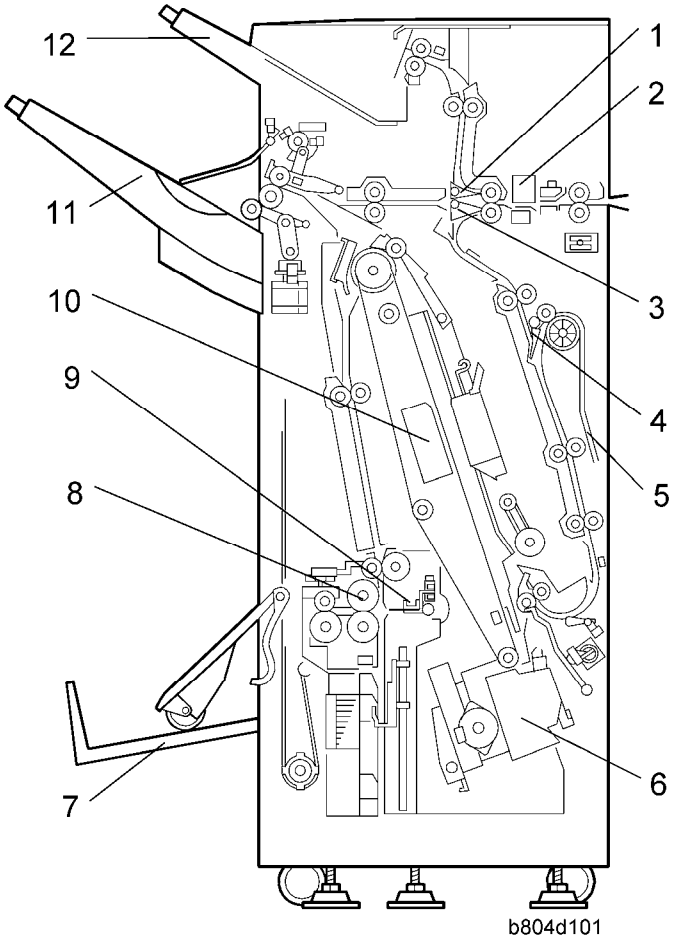

1. Proof Tray Junction Gate	7. Lower Tray (Booklet)*[1]
2. Punch Unit	8. Folder Rollers*[1]
3. Stapler Junction Gate	9. Folder Plate*[1]
4. Pre-Stack Junction Gate	10. Booklet Stapler*[1]
5. Pre-Stack Tray	11. Upper Tray (Shift)
6. Corner Stapler (M20)	12. Proof Tray

WWW.SERVICE-MANUAL.NET

Component Layout

*[1]: B804 Only

Paper direction

The operation of the proof tray and stapler junction gates direct the flow of the paper once it enters the finisher:

Proof Junction Gate	Stapler Junction Gate	Paper Feeds
Closed	Closed	Paper feeds straight through
Open	Closed	Paper feeds to the proof tray
Closed	**Open**	Paper feds to the staple tray

Proof tray

Copies are sent to the proof tray (12) when neither sorting nor stapling are selected for the job.

Upper tray

The upper tray (11) receives copies that are sorted and shifted and also receives copies that have been corner stapled. Corner stapling is provided on both the B804 and the B805.

Pre-stack tray

The pre-stack tray (5) has a switchback mechanism to increase the productivity of stapling. (☛2.3 "Pre-Stacking) Pre-stacking is done for corner stapling in the B804/B805 and for booklet stapling in the B804.

Lower tray

The lower tray (7) receives copies that have been center folded and stapled (booklet stapling). Booklet stapling is not provided on the B805.

WWW.SERVICE-MANUAL.NET

2.1.2 ELECTRICAL COMPONENTS

Upper Area B804/B805

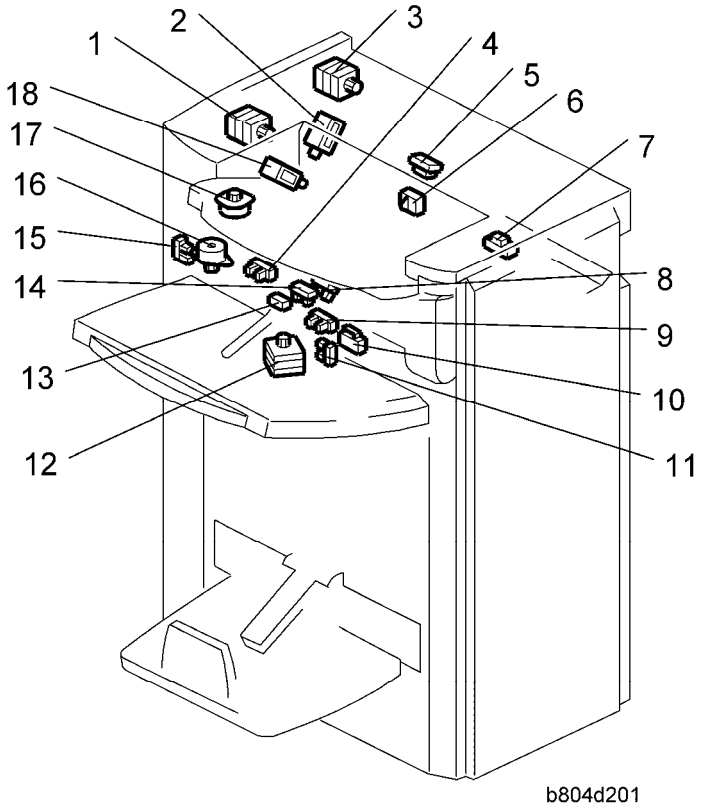

1. Upper/Proof Exit Motor (M4) 2. Stapling Tray Junction Gate Solenoid (SOL2) 3. Upper Transport Motor (M2) 4. Exit Guide Plate HP Sensor (S7) 5. Proof Tray Exit Sensor (S10) 6. Proof Tray Full Sensor (S11) 7. Finisher Entrance Sensor (S1) 8. Upper Tray Paper Height Sensor (S9) (Non-Staple Mode) 9. Upper Tray Limit Sensor (S12)	10. Upper Tray Limit Switch (SW2) 11. Stacking Roller HP Sensor (S13) 12. Stacking Sponge Roller Motor (M10) 13. Upper Tray Exit Sensor (S6) 14. Upper Tray Paper Height Sensor (S8) (Staple Mode) 15. Shift Roller HP Sensor (S5) 16. Shift Roller Motor (M18) 17. Exit Guide Plate Motor (M19) 18. Proof Junction Gate Solenoid (SOL1)

WWW.SERVICE-MANUAL.NET

Component Layout

Lower Area B804/B805

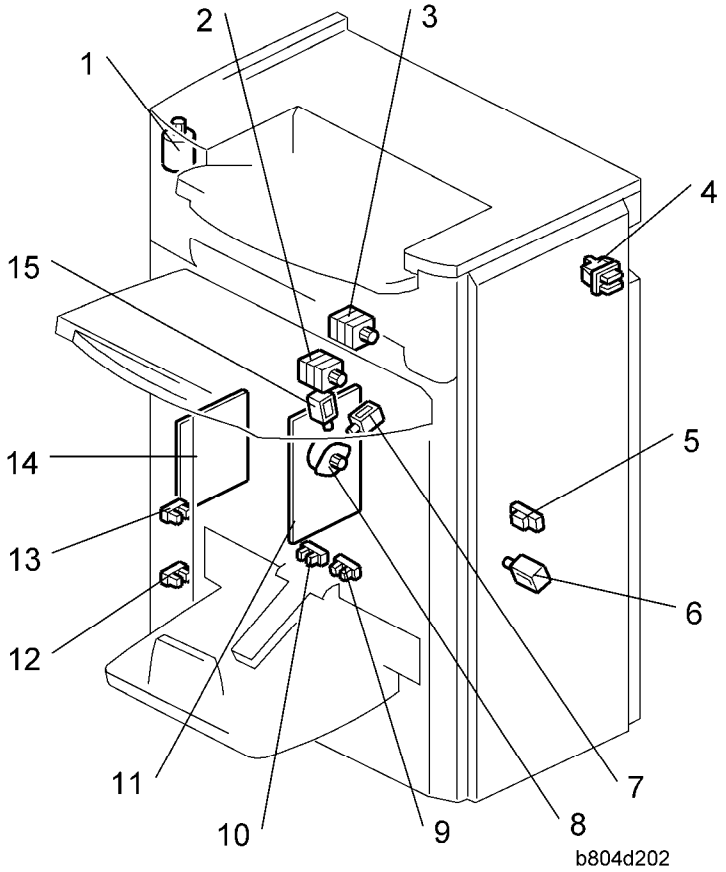

1. Upper Tray Lift Motor (M21) 2. Lower Transport Motor (M3) 3. Entrance Motor (M1) 4. Front Door Safety Switch (SW1) 5. Pre-Stack Tray Exit Sensor (S2) 6. Stapling Edge Pressure Plate Solenoid (SOL4) 7. Positioning Roller Solenoid (SOL3)	8. Positioning Roller Motor (M14) 9. Lower Tray Full Sensor – Front (S34)*[1] 10. Lower Tray Full Sensor – Rear (S33)*[1] 11. Main Board (PCB1) 12. Upper Tray Full Sensor – (S20) *[2] 13. Upper Tray Full Sensor – (S19) 14. Booklet Stapler Board (PCB2)*[1] 15. Booklet Pressure Roller Solenoid – (SOL5) *[1]

*[1]: B804 Only, *[2]: B805 Only

WWW.SERVICE-MANUAL.NET

Punch Unit B702

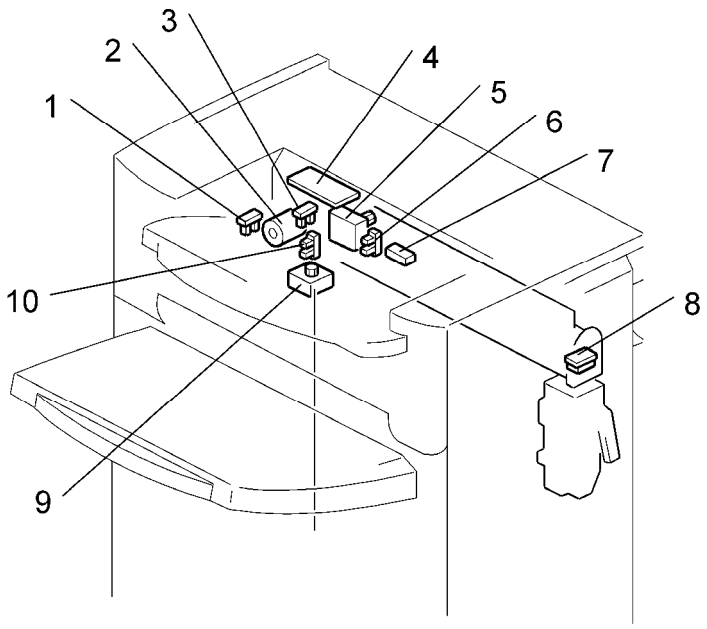

b804d203a

1. Punch Encoder Sensor (S24) 2. Punch Drive Motor (M24) 3. Punch HP Sensor (S24) 4. Punch Unit Board (PCB3) 5. Paper Position Sensor Slide Motor (M7)	6. Paper Position Slide HP Sensor (S22) 7. Paper Position Sensor (S3) 8. Punch Hopper Full Sensor (S4) 9. Punch Movement Motor (M9) 10. Punch Movement HP Sensor (S21)

WWW.SERVICE-MANUAL.NET

Component Layout

Stacker/Stapler - B804/B805

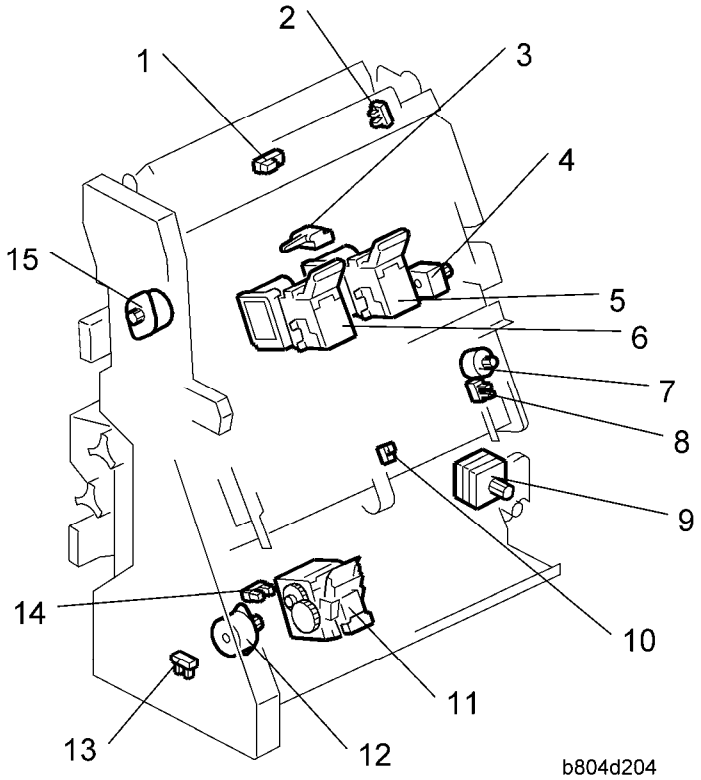

1. Stack Present Sensor (S32)*[1] 2. Stack Junction Gate HP Sensor (S27)*[1] 3. Stack Feed Out Belt HP Sensor (S16) 4. Feed Out Belt Motor (M5) 5. Booklet Stapler EH185R – Rear (M23)*[1] 6. Booklet Stapler EH185R – Front (M22)*[1]	7. Jogger Fence Motor (M15) 8. Jogger Fence HP Sensor (S15) 9. Corner Stapler Movement Motor (M6) 10. Stapling Tray Paper Sensor (S14) 11. Corner Stapler EH530 (M20) 12. Corner Stapler Rotation Motor (M13) 13. Corner Stapler HP Sensor (S17) 14. Stapler Rotation HP Sensor (S18) 15. Stack Junction Gate Motor (M17) *[1]

*[1]: B804 Only

WWW.SERVICE-MANUAL.NET

B804 Fold unit

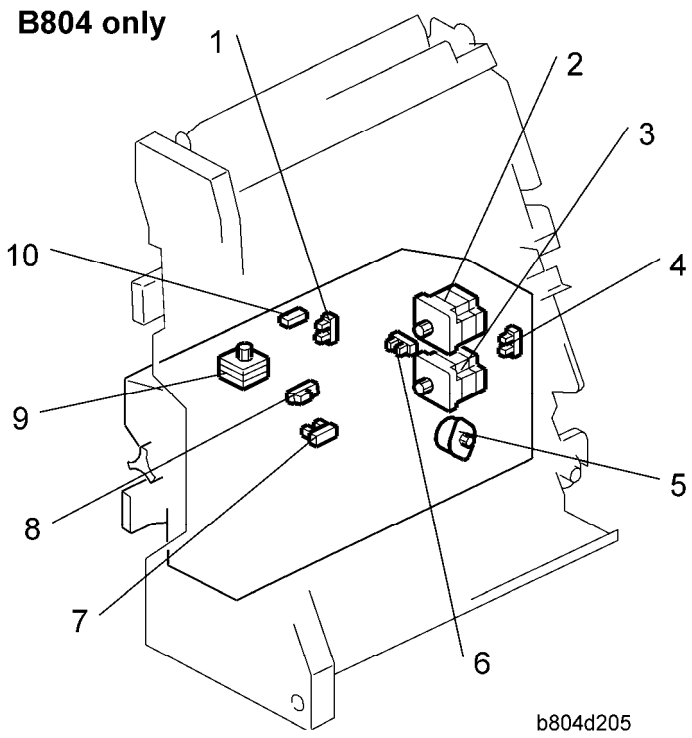

1. Clamp Roller HP Sensor (S25)	6. Fold Cam HP Sensor (S30)
2. Fold Roller Motor (M12)	7. Fold Bottom Fence HP Sensor (S28)
3. Fold Plate Motor (M11)	8. Fold Unit Entrance Sensor (S26)
4. Fold Plate HP Sensor (S29)	9. Clamp Roller Retraction Motor (M8)
5. Fold Unit Bottom Fence Lift Motor (M16)	10. Fold Unit Exit Sensor (S31)

2.1.3 SUMMARY OF ELECTRICAL COMPONENTS

Here is a general summary of all the electrical components of the B804/B805 finishers.

Note

- In the table below a number that appears in bold text (**M8**, etc.) denotes a component that is on the 2000/3000 Sheet Finisher B804 only.

WWW.SERVICE-MANUAL.NET

Component Layout

No.	Component	Function
Boards (PCB)		
PCB1	Main Board	The main board that controls the finisher
PCB2	Booklet Stapler Board	A separate board that controls booklet finishing.
PCB3	Punch Unit Board	The board that controls the punch unit.
Motors		
M1	Finisher Entrance Motor	Drives 1) the finisher entrance rollers, 2) and the punch waste transport belt of the punch unit.
M2	Upper Transport Motor	Drives the paper feed rollers that feed paper 1) to the proof tray, 2) straight-through to the upper tray, 3) the pre-stack tray entrance roller.
M3	Lower Transport Motor	Drives paper feed rollers forward and reverse in the pre-stack tray for the switchback, and drives the other rollers in the lower transport area.
M4	Upper/Proof Tray Exit Motor	Drives 1) proof tray exit rollers, 2) extension and retraction of the stacking sponge roller, 3) upper tray exit rollers.
M5	Feed Out Belt Motor	Drives the feed out belt that moves the stapled stacks out of the stapling tray after stapling.
M6	Corner Stapler Movement Motor	Moves the corner stapler horizontally on a steel rod to position the stapler at the stapling position at 1) the front, 2) the rear (straight stapling), 3) the rear (diagonal stapling), or 4) the front and rear for double stapling.
M7	Paper Position Sensor Slide Motor	Drives the movement of the paper position slide that holds the paper position sensor (S3) that detects the position of the paper.
M8	Clamp Roller Retraction Motor	Drives a large cam that alternately clamps and unclamps the clamp retraction roller, the idle roller of the clamp roller pair. When these rollers are clamped, they

WWW.SERVICE-MANUAL.NET

No.	Component	Function
		are part of the paper feed path and feed the stack toward the bottom fence of the fold unit. When the idle roller is retracted, the stacks falls a very short distance (3 mm) onto the fold unit bottom fence below. These rollers remain unclamped while the bottom fence positions the stack for folding and while the stack is folded by the fold rollers.
M9	Punch Movement Motor	Drives the front/back movement of the punch unit to position it correctly for stapling the paper below.
M10	Stacking Sponge Roller Motor	Rotates the stacking roller that drags each sheet back against the end fence to jog the bottom of each sheet after feed out to the upper tray.
M11	Fold Plate Motor	Drives the fold plate that pushes the center of the stack into the nip of the fold rollers to start the fold.
M12	Fold Roller Motor	Rotates forward and drives the fold rollers that fold the stack and feed it out of the fold unit, reverses to feed the fold once more into the fold unit, and then rotates forward again to feed the fold out of the fold unit.
M13	Corner Stapler Rotation Motor	Swivels the corner stapler and positions it so the staple fires at an oblique angle at the rear corner of the paper stack.
M14	Positioning Roller Motor	Drives the positioning roller in the stapling tray.
M15	Jogger Fence Motor	Drives the jogger fences in the stapling tray to jog both sides of the stack before stapling.
M16	Fold Unit Bottom Fence Lift Motor	Raises the bottom fence and stops when the center of the vertical stack is opposite the edge of the horizontal fold blade. The distance for raising the blade is prescribed as one-half the size of the paper selected for the job. For large paper, (A3, B4) the bottom fence first

WWW.SERVICE-MANUAL.NET

Component Layout

No.	Component	Function
		lowers the stack 10 mm below the fold position, and then raises it to the fold position.
M17	Stack Junction Gate Motor	Drives the large cam that operates the stack junction gate at the top of the stapling tray. When this gate is open, it directs the ascending stack to the upper tray if it has been corner stapled, or if it is closed the gate turns the booklet stapled stack down so it falls onto the bottom fence of the folding unit.
M18	Shift Roller Motor	Drives the shift roller that operates in shift mode to stagger document sets as they feed out to the upper tray (making them easier to separate).
M19	Exit Guide Plate Motor	Drives the mechanism that raises and lowers the exit guide plate.
M20	Corner Stapler EH530	This is the roving corner stapler, mounted on a steel rail that staples 1) at the front, 2) at the rear (straight staple), 3) at the rear (diagonal staple), and 4) font and rear (two staples).
M21	Upper Tray Lift Motor	Raises and lowers the upper tray during feed out to keep the tray at the optimum height until it is full.
M22	Booklet Stapler EH185R: Front	Booklet stapler. Staples paper stacks in the center before they are folded.
M23	Booklet Stapler EH185R: Rear	Booklet stapler. Staples paper stacks in the center before they are folded.
M24	Punch Drive Motor	Fires the punches that punch the holes in the paper.
Sensors		
S1	Finisher Entrance Sensor	Provides two functions: (1) Detects paper entering the finisher from the copier, and (2) Signals a jam if it detects paper at the entrance when the copier is switched on.

WWW.SERVICE-MANUAL.NET

No.	Component	Function
S2	Pre-stack Tray Exit Sensor	Detects 1) paper fed from the pre-stack tray to the stapling tray, and detects 2) paper in the pre-stack when the copier is switched on. (This sensor performs no timing function. The entire flow of paper through the pre-stacking mechanism is controlled by motor pulse counts.)
S3	Paper Position Sensor	The photosensor that detects the edge of the paper and sends this information to the punch unit board where it is used to position the punch for punching the holes in the paper.
S4	Punch Hopper Full Sensor	1) A photosensor that detects and signals that the punch hopper is filled with punch waste and needs emptying, and 2) confirms the presence of the punch hopper and signals an error if it is missing or not installed completely.
S5	Shift Roller HP Sensor	Located near the shift roller motor, controls the front-to-back movement of the shift roller as shifts paper during straight-through feed.
S6	Upper Tray Exit Sensor	A flat, photo sensor located inside the guide plate, detects the leading edge and trailing edge of the paper as it feeds out to the upper tray during straight-through jobs (with and without stapling). When paper is fed to the upper tray, at the paper output slot this sensor signals an error when it detects (1) paper has failed to leave the paper exit (lag error), (2) detects paper has failed to arrive at the paper exit (late error), (3) detects paper is in the exit slot when the machine is turned on.
S7	Exit Guide Plate HP Sensor	Controls the vertical movement of the control exit guide . The guide plate is in the home position when the guide plate is down and the actuator interrupts the sensor gap.

WWW.SERVICE-MANUAL.NET

Component Layout

No.	Component	Function
S8	Upper Tray Paper Height Sensor (Staple Mode)	This is the upper sensor of the upper/lower paper height sensor pair that controls the lift of the upper tray. This sensor detects the paper height of the stack in the upper tray when the copier is operating in the staple mode.
S9	Upper Tray Paper Height Sensor (Non-Staple Mode)	This is the lower sensor of the upper/lower paper height sensor pair that controls the lift of the upper tray. When the machine is switched on, the upper tray rises until the actuator on the tray triggers this sensor to switch off the upper tray lift motor.
S10	Proof Tray Exit Sensor	This sensor detects and times the feeding of paper to the proof tray. It also detects whether paper is present at the proof tray exit when the copier is switched on.
S11	Proof Tray Full Sensor	The top of the stack in the proof tray increases until it nudges the feeler of this sensor. The sensor then signals that the proof tray is full and the job halts until some paper is removed from the proof tray.
S12	Upper Tray Limit Sensor	This sensor controls the position of the upper tray 1) during straight-through feed out, 2) during shift feed out, 3) when the machine is turned on. The machine obeys the signal of whichever sensor is actuated first. An actuator attached to an arm triggers this sensor. The tip of the same arm depresses the upper tray limit switch. If the sensor fails, the tip of the arm will activate the upper tray limit microswitch (SW2) and stop the lift of the upper tray. **Note**: When the machine is turned on, the upper tray position is controlled by either this sensor or the upper tray paper height sensor (S9).
S13	Stacking Roller HP Sensor	Controls the forward and back motion of the stacking roller (a sponge roller) located at the output slot of the upper tray. The sponge roller drags each ejected sheet

WWW.SERVICE-MANUAL.NET

No.	Component	Function
		back against the end fence of the upper tray to keep the bottom of the stack aligned.
S14	Stapling Tray Paper Sensor	A photo sensor that detects whether paper is in the stapling tray. When this sensor detects paper, the bottom fence motor raises or lowers the bottom fence to position the selected paper size for booklet stapling.
S15	Jogger Fence HP Sensor	Detects the home position of the jogger fences. When the actuator on the jogger fence interrupts this sensor, the jogger fence is in its home position and the jogger fence motor (M15) stops.
S16	Stack Feed-Out Belt HP Sensor	Controls the position of the stack feed-out pawl on the stack feed-out belt. Once the actuator on the feed belt nudges the feeler of this sensor near the top of the stapling unit, the feed out belt motor (M5) remains on for the time prescribed to position the pawl at the home position to catch the next stack.
S17	Corner Stapler HP Sensor	Located at the front the stapling tray and mounted above the steel rod where the corner stapler travels, this sensor detects the home position of the corner stapler. The corner stapler is in its home position when the actuator on the corner stapler unit interrupts this sensor.
S18	Stapler Rotation HP Sensor	Controls the angle of the position of the corner stapler during oblique stapling.
S19	Upper Tray Full Sensor (B804/B805)	**B804**: When the actuator on the side of the upper fence enters the gap of this sensor, the sensor signals that the upper tray is at its lowest position (full) and stops the job. **B805**: One of two upper tray full sensors. This is the higher tray full sensor for A3 and other heavy paper. The other upper tray full sensor (20) is for lighter paper.

WWW.SERVICE-MANUAL.NET

Component Layout

No.	Component	Function
S20	Upper Tray Full Sensor (B805 only)	**B804**: This sensor is not used on the booklet finisher. There is only one upper tray full sensor (S18). **B805**: One of two upper tray full sensors. This is the lower tray full sensor for A4 and smaller paper. The other upper tray full sensor (19) is for larger paper.
S21	Punch Unit HP Sensor	Switches off the punch movement motor when the punch unit returns to its home position. Pulse counts determine where the punch unit pauses for punching and reversing.
S22	Paper Position Side HP Sensor	Controls the movement of the paper position detection unit. Switches on when the horizontal detection unit is at the home position (HP is the reference point).
S23	Punch HP Sensor	Detects the home position of the punch unit and controls the vertical movement of the punches when they fire.
S24	Punch Encoder Sensor	When the punch mode is selected for the job (2-hole, 3-hole, etc.), the machine controls the operation of the punch drive (M24) motor which drives a small encoder shaped like a notched wheel. This wheel is rotated forward and reverse precisely to select which punches are moved up and down during the punch stroke.
S25	Clamp Roller HP Sensor	Controls the movement of the clamp retraction roller (the idle roller of the clamp roller pair).
S26	Fold Unit Entrance Sensor	Detects 1) the leading edge of the stack during booklet stapling, and 2) also used to signal an alarm if a paper is detected at the entrance of the fold unit when the copier is turned on.
S27	Stack Junction Gate HP Sensor	Controls the opening and closing of the stack junction gate. Switches on when the stack junction gate is open and at the home position.

WWW.SERVICE-MANUAL.NET

No.	Component	Function
S28	Fold Bottom Fence HP Sensor	Controls the movement of the bottom fence in the folding unit using pulse counts based on the size of the paper selected for the job to position the stack correctly for feeding.
S29	Fold Plate HP Sensor	Along with the fold plate cam HP sensor (S30) this sensor controls the movement of the fold plate . The fold plate has arrived at the home position when the edge of the plate enters the gap of this sensor.
S30	Fold Plate Cam HP Sensor	Along with the fold plate HP sensor (S29), this sensor controls the movement of the fold plate. The actuator mounted on the end of the roller that drives the folder plate forward and back makes three full rotations, i.e. the actuator passes the sensor gap twice and stops on the 3rd rotation and reverses. This accounts for the left and right movement of fold plate.
S31	Fold Unit Exit Sensor	1) Detects the folded edge of the stack as it feeds out from the nip of the fold rollers, stops the rollers, and reverses them so the fold feeds back into the nip, 2) when the folded booklet finally emerges from the nip of the fold rollers, detects the leading and trailing edge of the booklet to make sure that it feeds out correctly.
S32	Stack Present Sensor	This sensor determines whether there is paper at the turn junction gate when the machine is turned on. If a stack is present, this triggers a jam alert. (This sensor performs no dynamic function such as pulse counting, etc. It only detects whether paper is at the top of the folding unit when power its turned on.)
S33	Lower Tray Full Sensor - Rear	This rear sensor is the lower sensor of the lower tray full sensor pair. Two actuators are attached to the actuator arm that touches the top of stapled and folded booklets as they feed out. The on/off combinations of the two

WWW.SERVICE-MANUAL.NET

Component Layout

No.	Component	Function
		sensors are used to detect when the tray is full and stop the job. (The lower tray is stationary. At tray full, the job halts until booklets are removed from the lower tray.)
S34	Lower Tray Full Sensor - Front	This front sensor is the higher sensor of the lower tray full sensor pair. Two actuators are attached to the actuator arm that touches the top of stapled and folded booklets as they feed out. The on/off combinations of the two sensors are used to detect when the tray is full and stop the job. (The lower tray is stationary. At tray full, the job halts until booklets are removed from the lower tray.)
Solenoids		
SOL1	Proof Junction Gate Solenoid	Opens and closes the proof tray junction gate. When the solenoid switches on, it opens the gate and paper is diverted to the proof tray. When this gate is closed, the paper goes straight to the upper tray. I
SOL2	Stapling Tray Junction Gate Solenoid	Directs paper to the stapling tray. When this solenoid is on, paper feeds straight through. When this solenoid is off, paper feeds to the stapler tray below.
SOL3	Positioning Roller Solenoid	Engages the stapler transport motor and the positioning roller of the stapling tray. The positioning roller pushes each sheet down against the bottom fence to align the bottom the stack for stapling. (The jogger fences align the sides.)
SOL4	Stapling Edge Pressure Plate Solenoid	Operates the pressure plate of the stapling unit. The pressure plate presses down the edge of stack in the stapling tray so it is tight for stapling.
SOL5	Booklet Pressure Roller Solenoid	When the paper stack in the stapling tray feeds to the folding unit, this solenoid turns on and operates the roller that pushes on the surface of the stack to flatten it.

WWW.SERVICE-MANUAL.NET

No.	Component	Function
Switches		
SW1	Front Door Safety Switch	The safety switch cuts the dc power when the front door is opened.
SW2	Upper Tray Limit SW	A micro-switch cuts the power to the upper tray lift motor when the upper tray reaches its upper limit. This switch duplicates the function of the upper tray limit sensor (S12) and stops the upper tray if S12 fails.

2.1.4 DRIVE LAYOUT

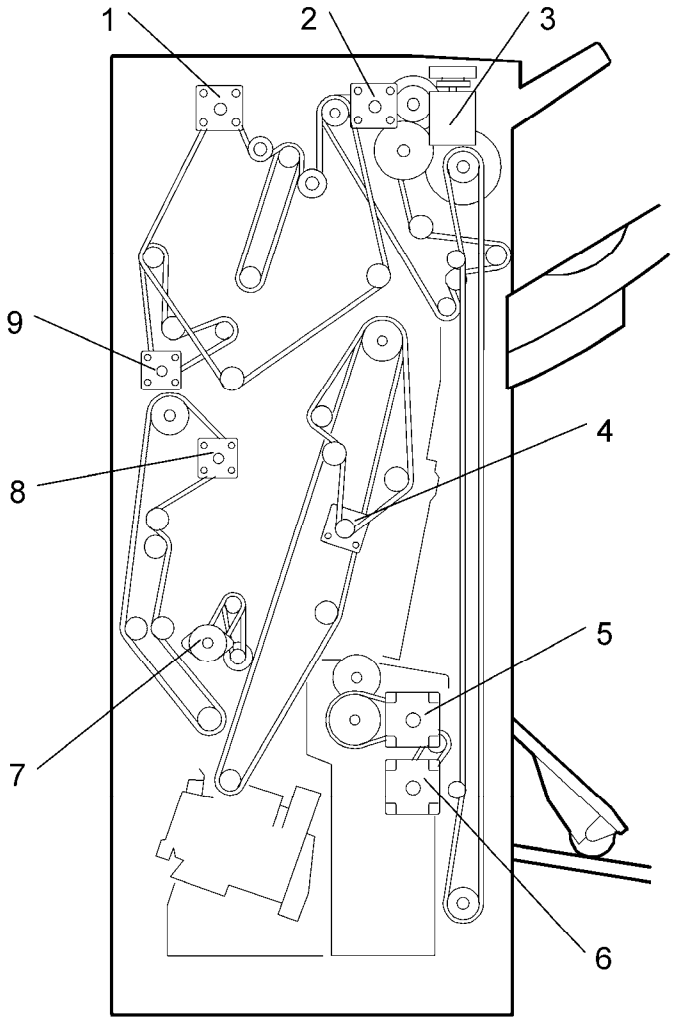

b804d206

WWW.SERVICE-MANUAL.NET

Component Layout

1. Upper Transport Motor (M2) 2. Upper/Proof Exit Motor (M4) 3. Upper Tray Lift Motor (M21) 4. Feed-Out Belt Motor (M5) 5. Fold Roller Motor*[1] (M12)	6. Folder Plate Motor*[1] (M11) 7. Positioning Roller Motor (M14) 8. Lower Transport Motor (M3) 9. Entrance Motor (M1)

*[1]: B804 Only

WWW.SERVICE-MANUAL.NET

2.2 JUNCTION GATES

The positions of the proof tray and staple tray junction gates determine the direction of paper feed after paper enters the finisher.

2.2.1 PROOF MODE

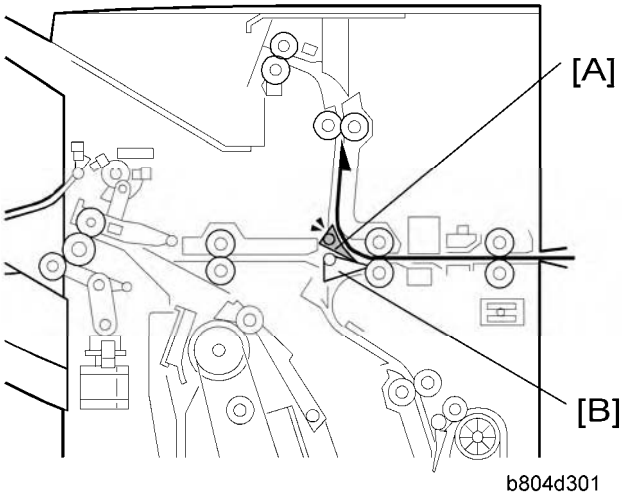

b804d301

Proof tray junction gate [A] opens. Staple tray junction gate [B] remains closed.
The proof tray junction gate directs paper to the proof tray above.

2.2.2 SHIFT MODE

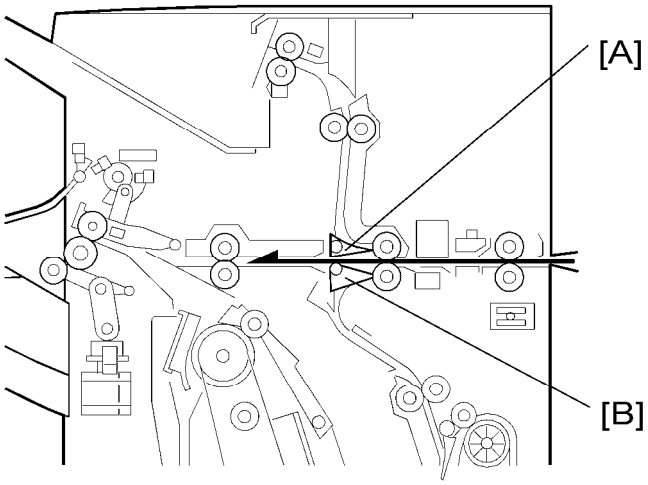

b804d302

Proof tray junction gate [A] remains closed. Staple tray junction gate [B] remains closed.
With both junction gates closed, the paper goes to the upper tray.

WWW.SERVICE-MANUAL.NET

Junction Gates

2.2.3 STAPLE MODE

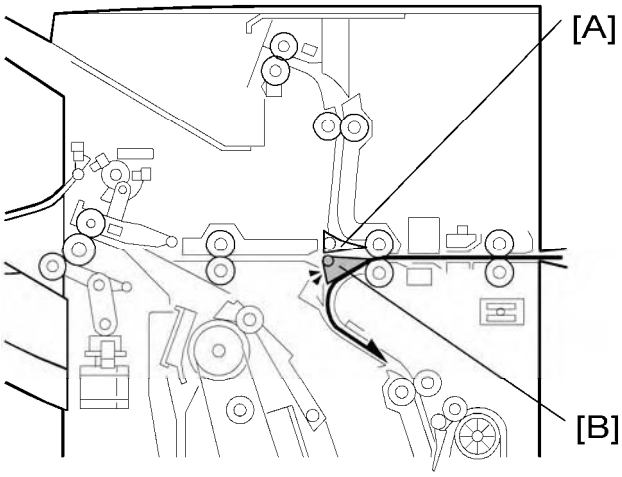

b804d303

Proof tray junction gate [A] remains closed. Staple tray junction gate [B] opens

The staple tray junction gate directs the paper to the staple tray below for jogging and stapling.

WWW.SERVICE-MANUAL.NET

2.3 PRE-STACKING

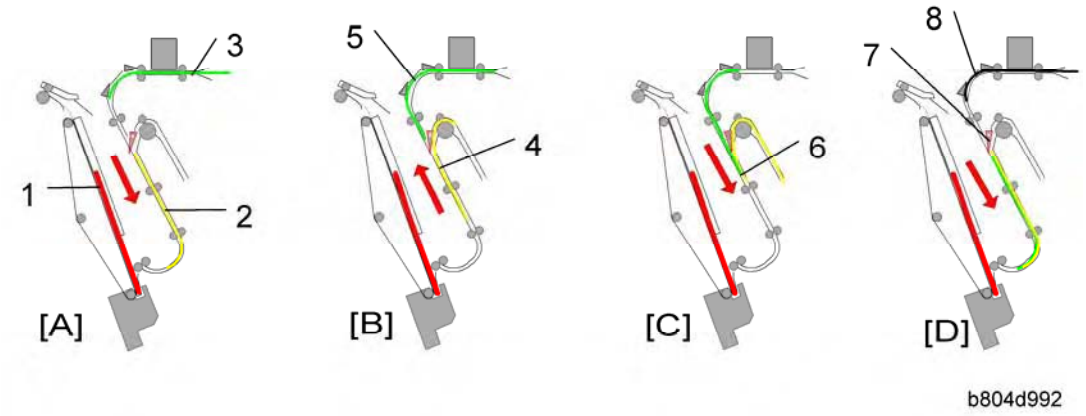

This example describes what happens to Set 2 during the feed and stapling cycle of sets that contain three pages.

- [A]: While the Set 1 is being stapled in the staple tray [1], the 1st sheet of Set 2 [2] feeds to the pre-stack tray, and the 2nd sheet of Set 2 [3] enters the finisher.
- [B]: The pre-stack junction gate opens and the 1st sheet of Set 2 [4] switches back to the top of the pre-stack tray as the 2nd sheet of Set 2 [5] starts to descend.
- [C]: As the 2nd sheet of Set 2 continues to descend, the 1st sheet of Set 2 is fed from the pre-stack tray. At this time the leading edges [6] of both sheets are even.
- [D]: The trailing edges of the 1st and 2nd sheets of Set 2 pass the junction gate [7] as the 3rd sheet of Set 2 [8] enters the finisher.

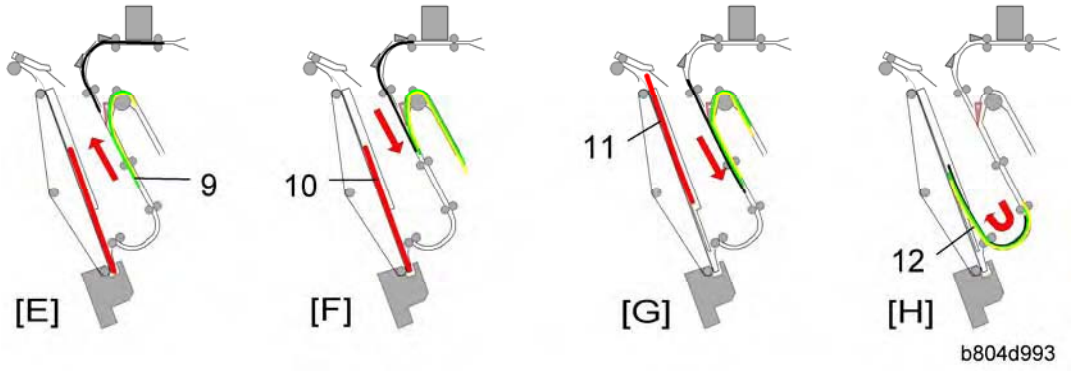

- [E]: The 1st and 2nd sheets of Set 2 [9] switch back together into the top of the pre-stack and wait for the 3rd of Set 2 sheet to arrive.
- [F]: The stapling of Set 1 in the staple tray [10] is completed.
- [G]: Set 1 [11] exits the staple tray.
- [H]: The three sheets of Set 2 [12] feed together into the stapler tray for stapling.

Pre-stacking is only done for A4, B5, and LT paper.

WWW.SERVICE-MANUAL.NET

Pre-Stacking

In one-staple mode, one sheet goes to the pre-stacking tray. Then two sheets go to the stapler tray at the same time.

In two-staple mode and booklet mode, three sheets go to the pre-stacking tray. Then four sheets go to the stapler tray at the same time.

WWW.SERVICE-MANUAL.NET

2.4 TRAY MOVEMENT MECHANISM

2.4.1 UPPER TRAY

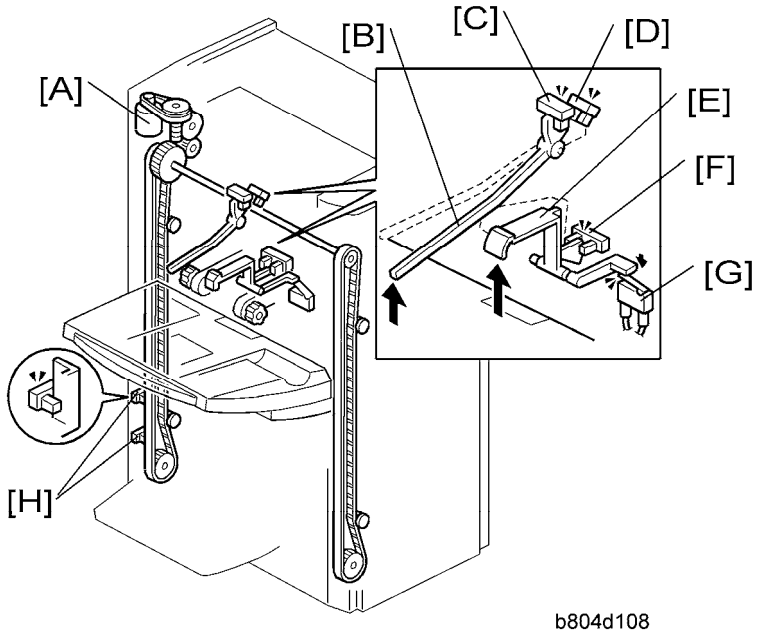

[A]: Upper Tray Lift Motor
[B]: Upper Feeler
[C]: Upper Tray Paper Height Sensor 1 (Staple Mode)
[D]: Upper Tray Paper Height Sensor 2 (Non-Staple Mode)
[E]: Lower Feeler
[F]: Upper Tray Limit Sensor
[G]: Upper Tray Limit Switch
[H]: Upper Tray Full Sensors

Important

- The B804 (shown above) has only one upper tray full sensor (the higher sensor at [H]).
- The B805 has two upper tray full sensors (the upper and lower sensor at [H]). On the B805 the upper sensor detects tray full for heavier paper (A3, DLT, B4, LG, 12 x 18”), and the lower sensor detects tray full for lighter paper (A4, LT, etc.).
- The tray full capacity is 2,000 sheets (B804) for A4, LT and 3,000 sheets (B805) for

WWW.SERVICE-MANUAL.NET

Tray Movement Mechanism

A4, LT.

Five sensors and one switch control the operation of the upper tray lift motor [A].

Upper Tray Raising and Lowering

Operation Mode	Sensors, Switch				Action
	[C]	[D]	[F]	[G]	
Standby (Non-Staple Mode)	OFF	OFF			Stops the lift motor at the standby position when the actuator of the upper feeler deactivates sensor [C] (when it is between sensors [C] and [D]). **Note:** Sensor [F] and switch [G] are used as backup if sensor [C] fails or if the upper tray is not attached.
Straight Through			ON		**Non-staple mode operation:** During operation, tray lift is controlled only by sensor [F]. When the actuator leaves sensor [F], the tray lowers until the actuator reactivates sensor [F].
Shift			ON		
Standby (Staple Mode)	ON				**Standby:** The upper tray stops and waits for the paper output when the actuator activates sensor [C]. [D] is not used for staple mode **Staple Mode Operation:** ▪ The upper tray lowers the prescribed distance immediately after the stack exits. ▪ The upper tray rises until the actuator activates sensor [C] and stops the tray lift motor (and the tray) to wait for the next set. ▪ Sensor [F] and switch [G] are used as backup if sensor [C] fails.

Tray Full

WWW.SERVICE-MANUAL.NET

B804	When the actuator on the tray activates the upper tray full sensor [H] the tray lift motor [A] switches off. Operation resumes after some copies are removed from the tray. Upper Tray Capacity: 2,000 sheets (A4, LT)
B805	The operation of the upper tray full sensor is the same as the B804. Capacity: 1,500 sheets for A3, B4 or other large paper. An additional upper tray full sensor (below sensor [H]) allows more sheets to stack on the upper tray. Capacity: 3,000 sheets (A4, LT)

2.4.2 LOWER TRAY (B804 ONLY)

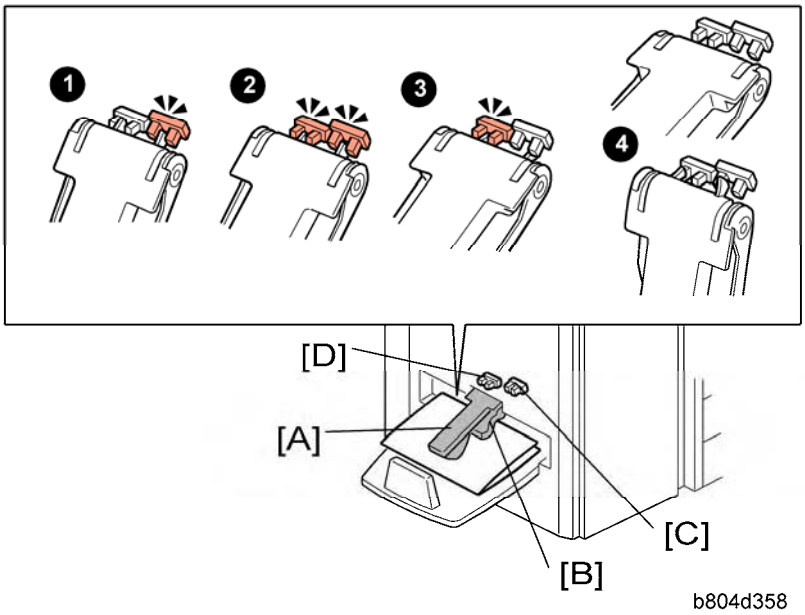

The lower tray sensor actuator arm [A] rests on the top of the stack of stapled booklets as they are output to the lower tray. A flap depressor [B] keeps the open ends of the booklets down.

The front lower tray full sensor (S34) [C] and rear lower tray full sensor (S33) [D] detect when the lower tray is full of booklets.

Important

- The front lower tray full sensor is mounted higher than the rear lower tray full sensor.
- The lower tray is stationary. When it becomes full, the stapling and folding job stops until booklets are removed from the tray.

WWW.SERVICE-MANUAL.NET

Tray Movement Mechanism

- If the lower tray is not installed (this is detected if the front and rear sensors remain OFF), the machine will not operate in the booklet staple and fold mode. When booklet mode is selected, the tray full message appears on the operation panel.

The combinations of the two actuators and two sensors as the actuator arm rises determines the number of booklets that the lower tray can hold before the job stops.
The tray full detection depends on the size of the paper and the number of sheets in one stapled and folded booklet.
In the table below, the conditions (❶ Ready ❷ Full 1, ❸ Full 2 ❹ Full 3: See the illustration on the previous page) refer to the states of the sensors described on the previous page.

Condition	Front Sensor	Rear Sensor
Ready	ON	OFF
Full 1	ON	ON
Full 2	OFF	ON
Full 3 (or lower tray not installed)	OFF	OFF

In the tables below:

- "Sht" denotes "sheets in a stack".
- "Cnt" denotes "Count" (see below for an explanation).

After a booklet is feed out, the fold roller motor stops the exit roller. The machine then monitors the tray full sensors every 100 ms. The machine checks for a certain condition, based on the size of the paper and the number of sheets in the booklet.
An example is shown below. Tell the operators that the number of sheets that the lower tray can hold will vary greatly.

WWW.SERVICE-MANUAL.NET

Lower Tray Full Condition Table

A3 (DLT)

	1 Sht	**2 Sht**	**3 Sht**	**4 Sht**	**5 Sht**	**6 Sht**	**7 Sth**	**8 Sht**	**9 Sht**	**…**
Full 1	3 Cnt	—	—	—	—	—	—	—	—	…
Full 2	—	5 Cnt	15 Cnt	—	—	—	—	—	—	…
Full 3	—	—	—	7 Cnt	13 Cnt	4 Cnt	2 Cnt	2 Cnt	2 Cnt	…

A4 (LT)

	1 Sht	**2 Sht**	**3 Sht**	**4 Sht**	**5 Sht**	**6 Sht**	**7 Sth**	**8 Sht**	**9 Sht**	**…**
Full1	16 Cnt	—	—	—	—	—	—	—	—	…
Full 2	—	10 Cnt	10 Cnt	15 Cnt	20 Cnt	15 Cnt	10 Cnt	8 Cnt	8 Cnt	…
Full 3	—	—	—							…

Examples:

After the copier makes a booklet with 1 sheet of A3/DLT paper, the machine checks every 100 ms for the ‘Full 1’ condition. If the Full 1 condition occurs 3 times, the machine detects that the tray is full.

After the copier makes a booklet with 5 sheets of A4/LT paper, the machine checks every 100 ms for the ‘Full 2’ condition. If the Full 2 condition occurs 20 times, the machine detects that the tray is full.

WWW.SERVICE-MANUAL.NET

2.5 CORNER STAPLING

2.5.1 STACKING AND JOGGING

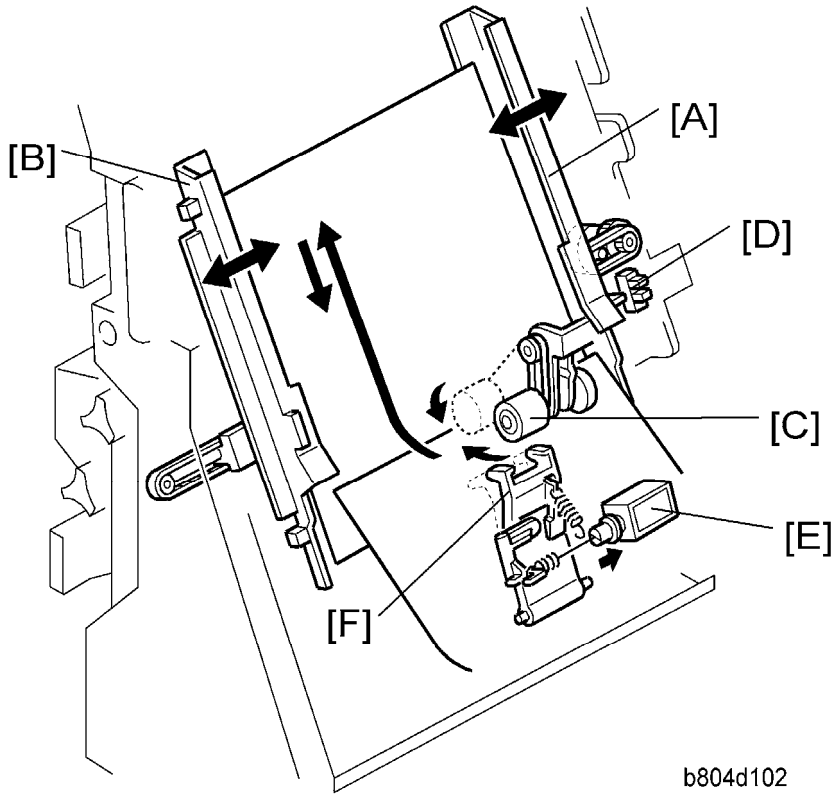

[A]: Jogger Fence Motor (M15)
[B]: Jogger Fences
[C]: Positioning Roller
[D]: Jogger Fence HP Sensor (S15)
[E]: Stapling Edge Pressure Plate Solenoid (SOL4)
[F]: Pressure Plate

At the beginning of the job, the jogger fence motor (M15) [A] switches on and moves the jogger fences [B] to the standby position (7.5 mm from the sides of the selected paper size). When each sheet passes the pre-stack tray exit sensor (S2) and enters the stapling tray:

- The jogger fence motor switches on and moves the jogger fences to within 5.5 mm of the sides of the selected paper size.
- The positioning roller solenoid (SOL3) switches on for the time prescribed for the paper

WWW.SERVICE-MANUAL.NET

size. This pushes the positioning roller [C] onto the sheet and pushes it down onto bottom fence. This aligns the edge of the stack.

Next, the jogger fence motor:

- Switches on again and moves the jogger fences to within 2.6 mm of the sides of the stack to align the sides of the stack.
- Reverses and moves the fences to the standby position (7.5 mm away for the sides) and waits for the next sheet.
- The jogger fence HP sensor [D] switches off the jogger motor at the end of the job.

After the last sheet feeds:

- The stapling edge pressure plate solenoid [E] (SOL4) switches on and pushes the pressure plate [F] onto the stack to press down the edge for stapling.
- The corner stapler staples the stack.

2.5.2 STAPLER MOVEMENT

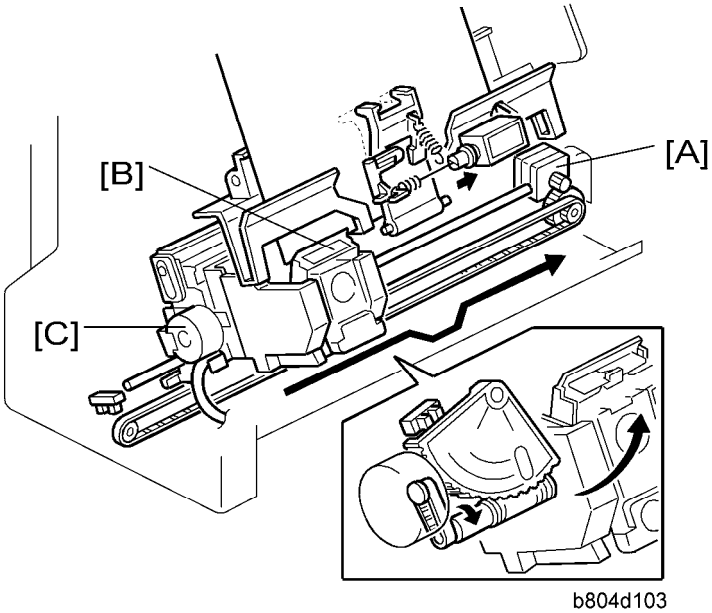

[A]: Stapler Movement Motor
[B]: Stapler
[C]: Stapler Rotation Motor

WWW.SERVICE-MANUAL.NET

Corner Stapling

The stapler performs horizontal and rotational movement in each of the four staple modes:

- Front 1 staple
- Rear 1 staple
- Rear diagonal staple
- Rear/Front 2 staples

The stapler movement motor [A] drives a timing belt that moves stapler [B] left and right on its stainless steel rail.

The stapler rotation motor [C] rotates the stapler into position for diagonal stapling at the rear.

- The stapler movement motor switches on and moves the stapler the standby stapling position. (This is the stapling position for the paper size selected for the job.)
- The stapler movement motor switches off and the stapler waits for the signal to fire (or swivel and for diagonal stapling).

If the stack is to be stapled at two positions:

- The stapler movement motor moves the stapler to the front position and staples the front.
- The stapler movement motor moves the stapler to the rear and the stapler staples the rear.

If the stack is stapled at the rear with a diagonal staple, the staple moves to the rear. When it is time for stapling, the rotation motor rotates the stapler to the correct angle and holds the stapler in that position while the stapler fires.

The stapling positions can be fine adjusted with **SP6-133-001**.

WWW.SERVICE-MANUAL.NET

2.5.3 CORNER STAPLING

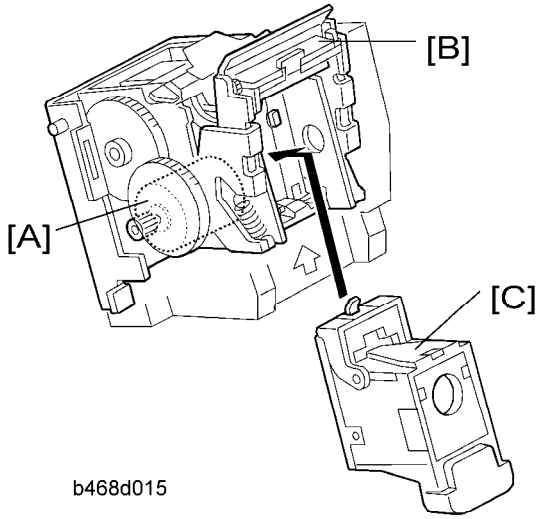

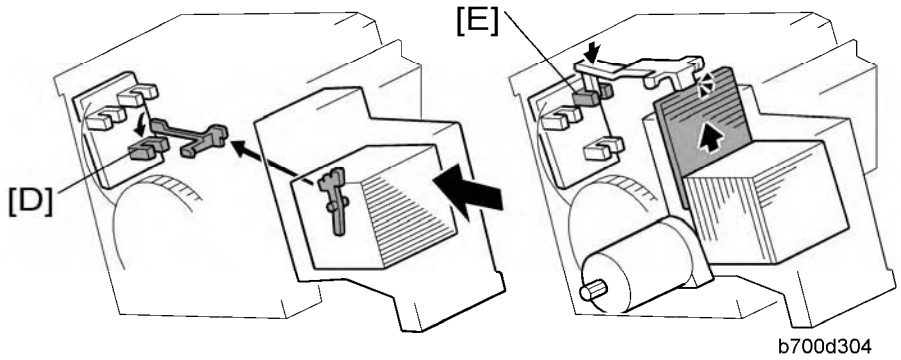

Staple firing is driven by the stapler motor [A] inside the stapler unit. The stapler hammer [B] fires the stapler [C].

The cartridge set sensor [D] detects the cartridge at the correct position.

The staple end sensor [E] detects the staple end condition.

WWW.SERVICE-MANUAL.NET

2.6 BOOKLET STAPLING (B804 ONLY)

2.6.1 BOOKLET PRESSURE MECHANISM

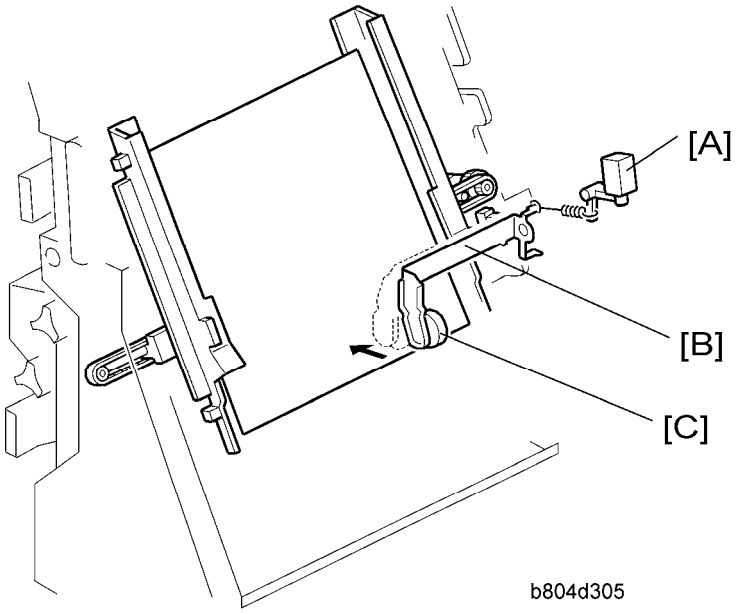

[A]: Booklet Pressure Roller Solenoid (SOL5)
[B]: Booklet Pressure Roller Arm
[C]: Booklet Pressure Roller

As soon as the edges are aligned by the positioning roller and the jogger fences, the stack feed out belt moves.

In booklet mode, immediately after the edges are aligned by the positioning roller and jogger fences, the booklet pressure solenoid switches on and the booklet pressure roller presses down on the stack until booklet stapling is finished. This prevents the stack from shifting during stapling.

WWW.SERVICE-MANUAL.NET

2.6.2 BOOKLET STAPLING AND FOLDING

Overview

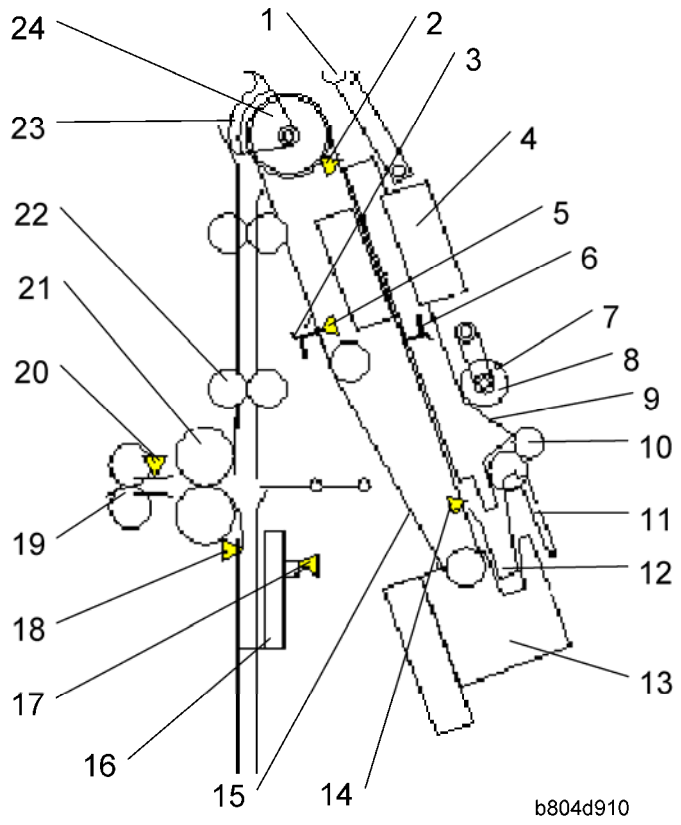

1. Leading Edge Pressure Roller	13. Corner Stapler (M20)
2. Stack Present Sensor (S32)	14. Stapling Tray Paper Sensor (S14)
3. Feed Out Belt Pawl 1	15. Feed Out Belt
4. Booklet Staplers x2 (M22, M23)	16. Fold Unit Bottom Fence
5. Stack Feed Out Belt HP Sensor (S16)	17. Fold Bottom Fence HP Sensor (S28)
6. Feed Out Belt Pawl 2	18. Fold Unit Entrance Sensor (S26)
7. Positioning Roller	19. Fold Unit Exit Rollers x2
8. Booklet Pressure Roller (Rear)	20. Fold Unit Exit Sensor (S31)
9. Jogger Fences x2	21. Fold Rollers x2
10. Pre-Stack Exit Roller	22. Clamp Rollers x2
11. Pressure Plate	23. Stack Junction Gate
12. Stapling Tray Bottom Fence	24. Stack Transport Roller

WWW.SERVICE-MANUAL.NET

Booklet Stapling (B804 Only)

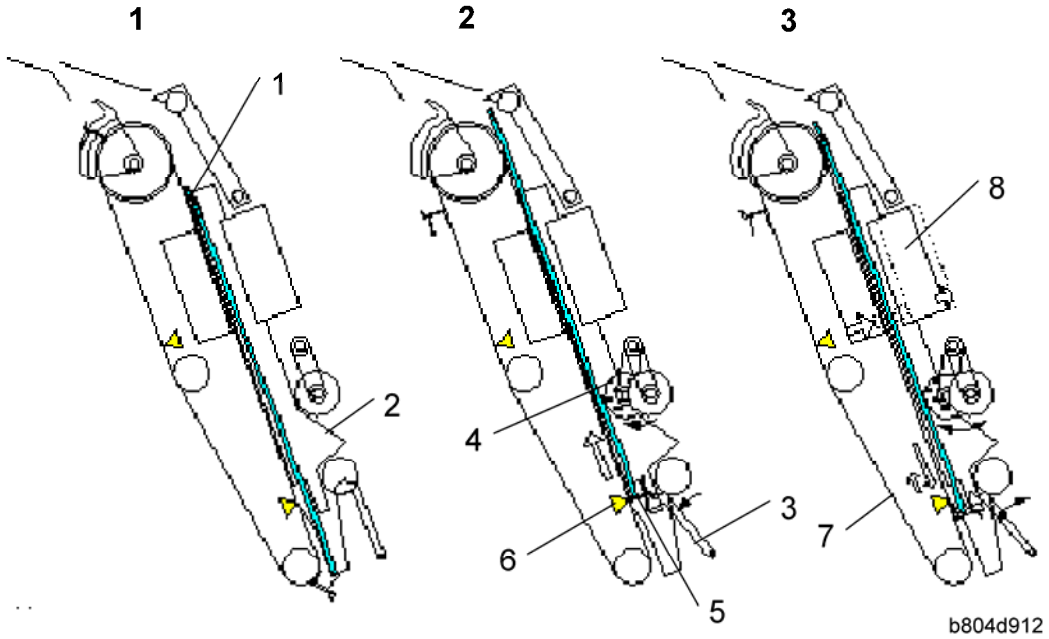

1:

The last sheet of the stack [1] enters the stapling tray. The jogger fences [2] jog the last sheet into position (based on the width of the selected paper size) and then retract and stop 1 mm away from the sides of the stack.

2:

The pressure plate [3] and booklet pressure roller [4] press down on the sheet. The stack feed out belt switches on and the pawl [5] on the feed out belt catches the bottom of the stack and raises it. The stapling tray sensor [6] detects the trailing edge of the paper stack.

3:

The feed out belt [7] raises the stack to the prescribed stapling position and stops. The jogger fences move to the sides of the stack and the booklet staplers [8] staple the stack.

WWW.SERVICE-MANUAL.NET

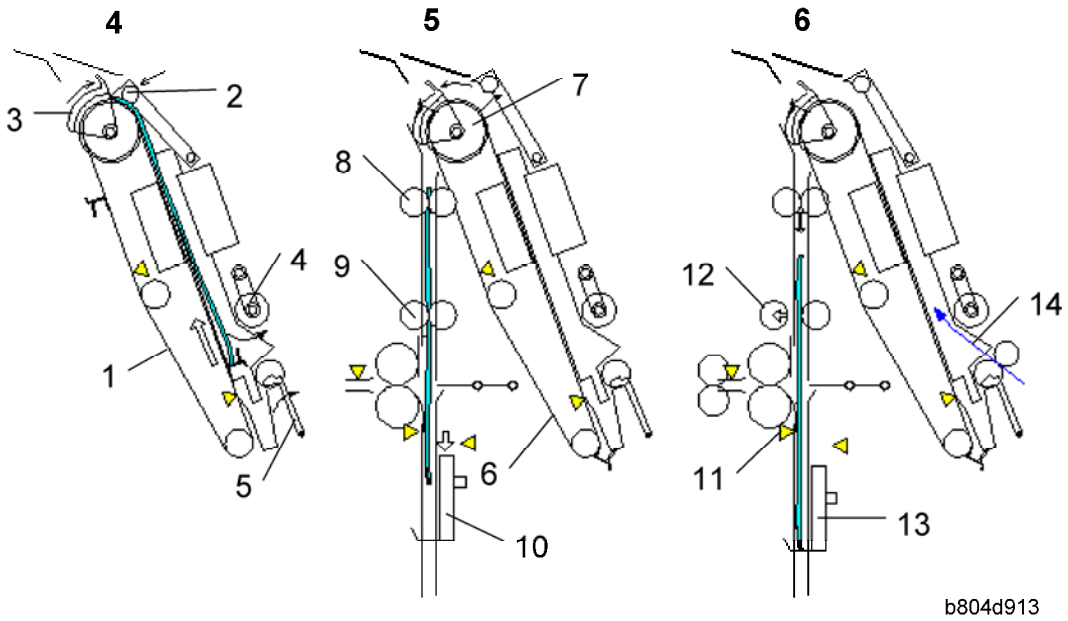

4:

The jogger fences remain 1 mm away from the sides of the stack. The feed out belt [1] raises the stack until the top of the stack is 10 mm past the leading edge pressure roller [2] and stops. The leading edge pressure roller descends and applies pressure to the top of the stack. The stack junction gate [3] (normally open) closes. The pressure roller [4] and pressure plate [5] retract.

5:

The feed out belt [6], transport rollers [7], [8], and clamp rollers [9] rotate and feed the stack past the closed stack junction, over the top and down toward the bottom fence [10]. At the same time, the fold unit bottom fence descends from its home position and stops 10 mm below the fold position.

6:

The rollers feed the leading edge of the stack to within 3 mm of the stack stopper of the bottom fence [13]. The fold unit entrance sensor [11] detects the stack and opens the clamp rollers [12]. The stack drops 3 mm onto the fold unit bottom fence [13]. At this time, the first sheet [14] of the next stack feeds to the stapling tray.

WWW.SERVICE-MANUAL.NET

Booklet Stapling (B804 Only)

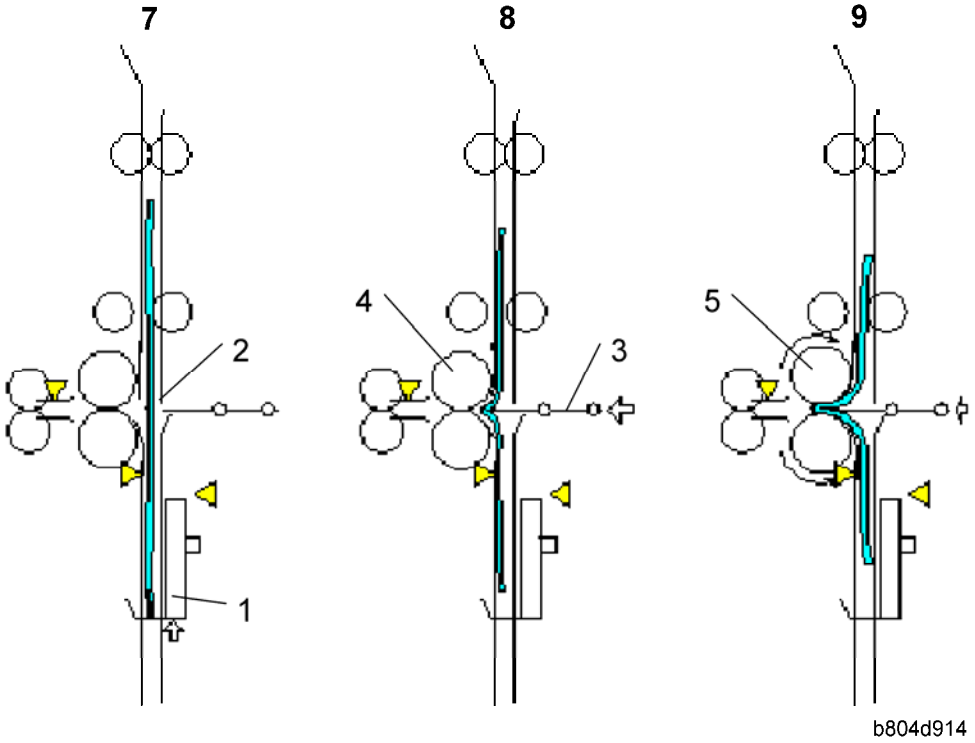

7:

The bottom fence [1] raises the stack to the prescribed fold position [2].

8:

The fold plate [3] moves to the left and advances 1/3 its maximum horizontal stroke and exerts 20 kg (44 lb.) of pressure at the fold rollers [4].

9:

With the fold plate pushing the stack into nip of the fold rollers [5], the fold rollers begin to rotate and fold the stack as it feeds out.

WWW.SERVICE-MANUAL.NET

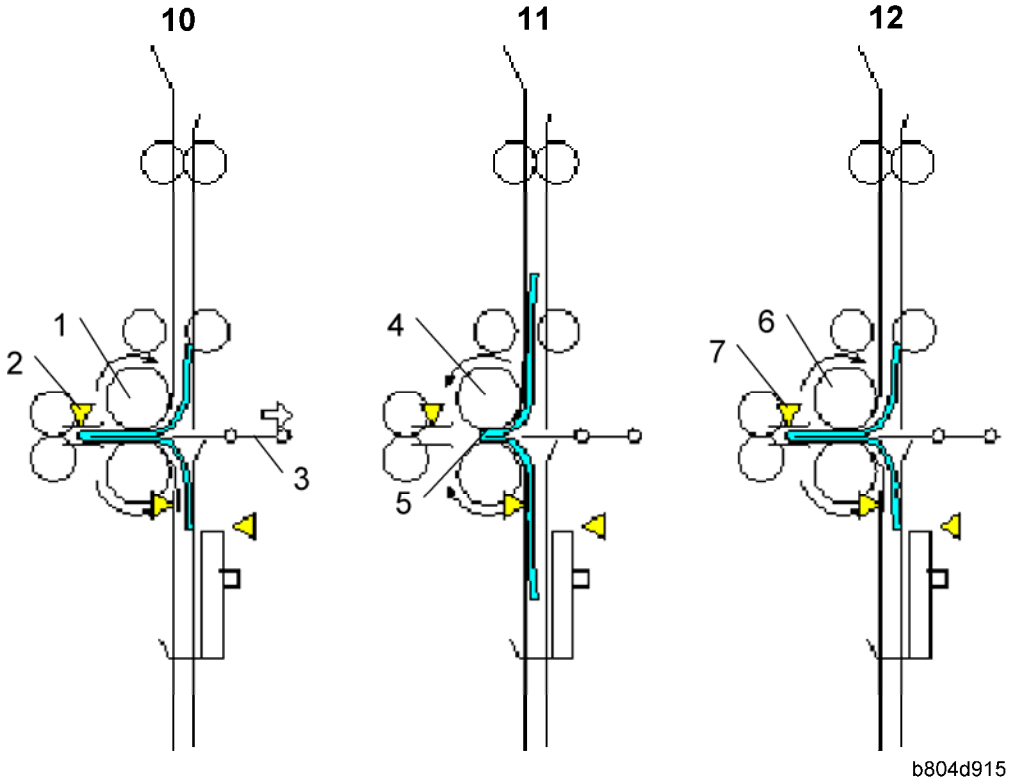

10:

When the fold rollers [1] feed the stack 10 mm past the nip, the fold plate retracts until it no longer touches the stack. The fold unit exit sensor [2] detects the folded edge of the stack and stops the fold rollers.

11:

The rotation of the fold rollers [4] reverses and feeds the folded edge back until only 3 mm of the fold [5] remains at the nip.

12:

The fold rollers [6] rotate forward once again feed out. The fold unit exit sensor [7] once again detects the edge of the fold.

Note

- You can do **SP6-136-001** to increase the sharpness of the fold. The number of forward and reverse feeds can be set in the range of 2 to 30. The machine repeats Steps 11 and 12. For more, please refer to Section "Service Tables".

WWW.SERVICE-MANUAL.NET

Booklet Stapling (B804 Only)

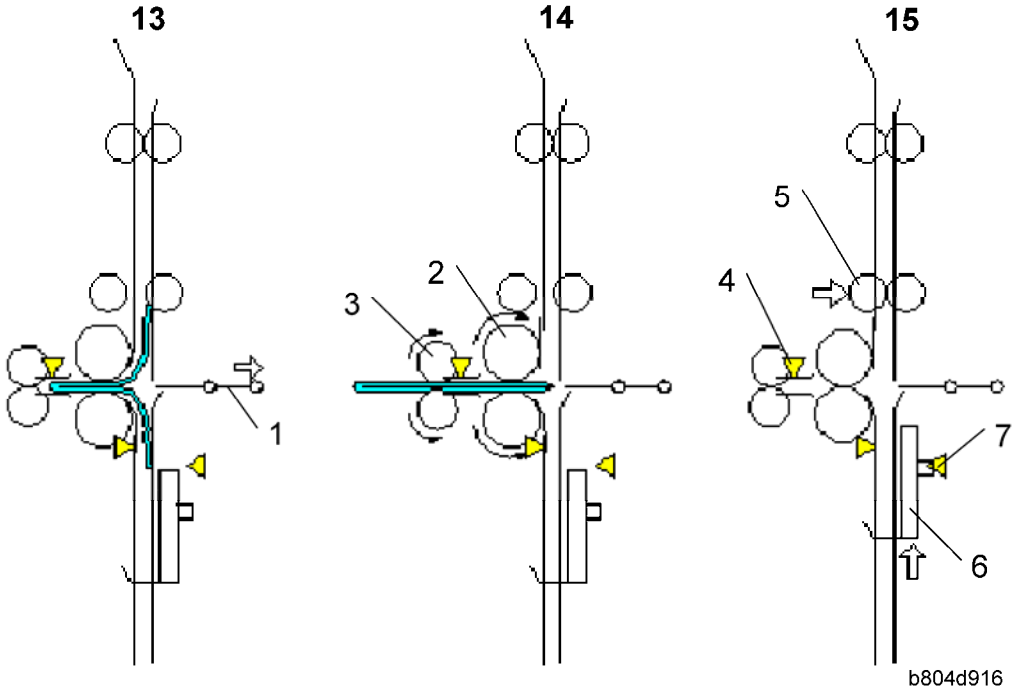

13:

With the feed of the stack halted, the fold plate [1] retracts. The fold plate HP sensor (not shown) detects the fold plate and stops it at its home position.

14:

The fold rollers [2] and fold unit exit rollers [3] begin to rotate together and feed out the folded booklet to the lower tray.

15:

Once the trailing edge of the stack passes the fold unit exit sensor [4], the clamp rollers [5] close to be ready to feed the next stack. The fold unit bottom fence [6] descends. The bottom fence HP sensor [7] stops the bottom fence when it detects the actuator on the bottom fence.

WWW.SERVICE-MANUAL.NET

2.6.3 BOOKLET STAPLING AND FOLDING MECHANISMS

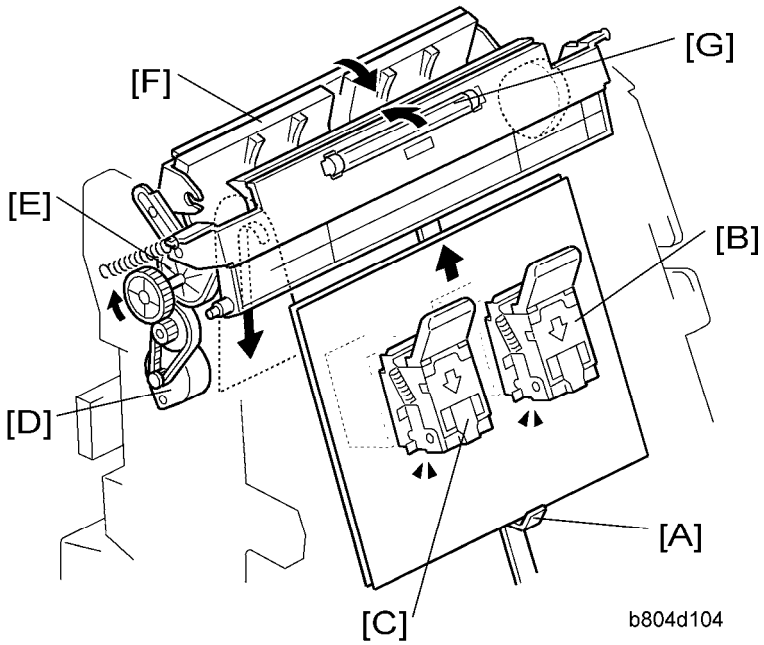

Booklet Stapler

[A]: Feed Out Belt Pawl. Raises the stack to stapling position.

[B]: Booklet Stapler EH185R – Rear

[C]: Booklet Stapler EH185R – Front

Stack Junction Gate

[D]: Stack Junction Gate Motor. Drives a timing belt and stack junction gate cam.

[E]: Stack Junction Gate Cam. Opens and closes the stack junction gate.

[F]: Stack Junction Gate. The stack junction gate motor and stack junction gate cam close the stack junction gate. The feed out belt pawl raises the stapled stack and sends it over the top and down to the fold unit.

[G]: Leading Edge Pressure Roller. Presses down on the leading edge of the stack after booklet stapling.

WWW.SERVICE-MANUAL.NET

Booklet Stapling (B804 Only)

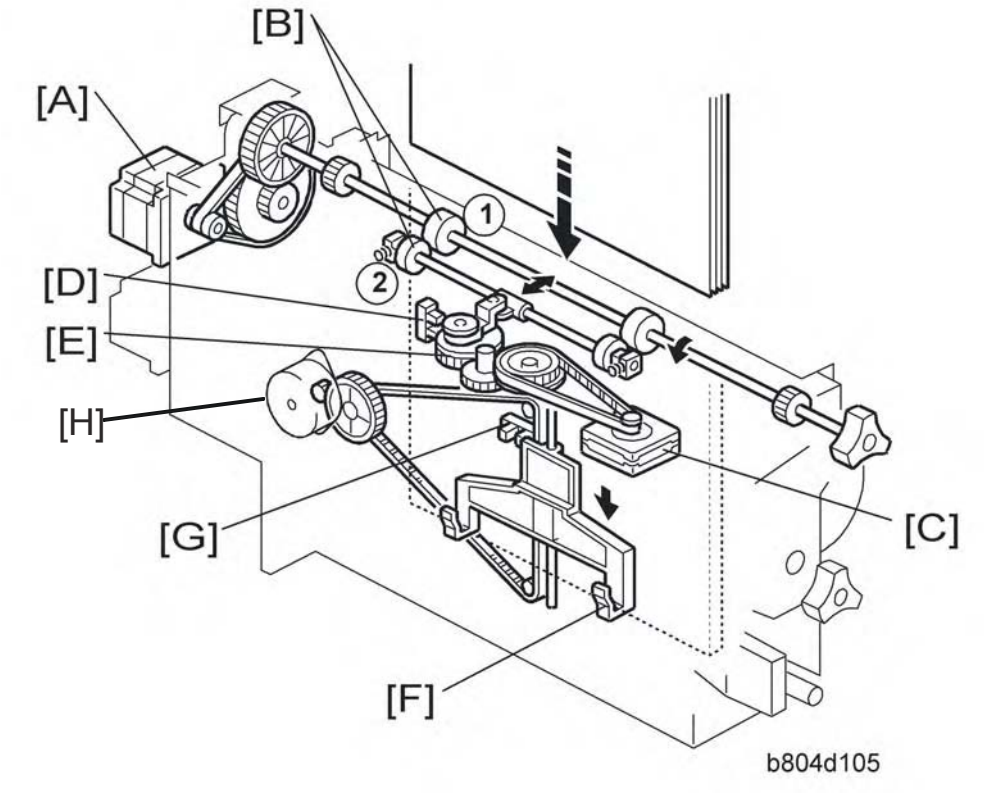

Clamp Roller

[A]: Fold Roller Motor. Drives the stationary clamp drive roller ① as well as the fold rollers (see next page).

[B]: Clamp Rollers.

① Clamp Roller – Drive. Rotated by the fold roller motor, this stationary roller feeds the stack down with the retracting roller closed.

② Clamp Roller – Retracting. Opened and closed by the retraction motor [C].

[C]: Clamp Roller Retraction Motor. Operates the clamp roller cam that retracts the retracting clamp roller. The clamp rollers feed the stack to within 3 mm of the bottom fence when closed and then open to drop the stack onto the bottom fence.

[D]: Clamp Roller HP Sensor. Controls the rotation of the clamp roller retraction motor and cam that open and close the retracting clamp roller.

[E]: Clamp Roller Cam. Forces open the spring loaded retracting clamp roller.

Bottom Fence

[F]: Bottom Fence. Raises the booklet stapled stack to the fold position.

[G]: Bottom Fence HP Sensor. Detects the actuator on the bottom fence and stops it at the home position after folding.

[H]: Bottom Fence Lift Motor. Raises the bottom fence and stapled stack to the fold position prescribed for the paper size.

WWW.SERVICE-MANUAL.NET

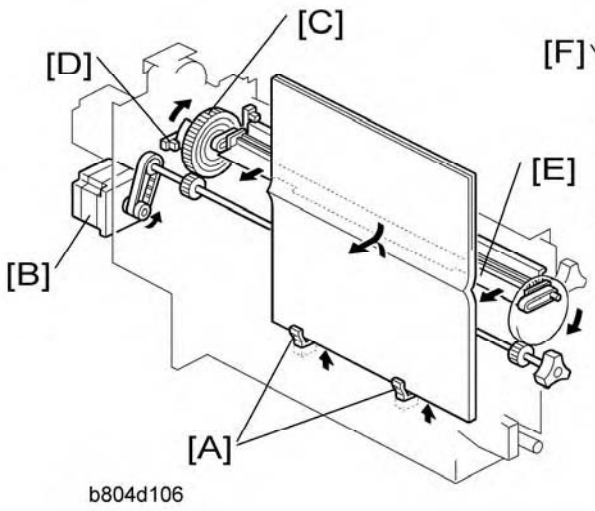

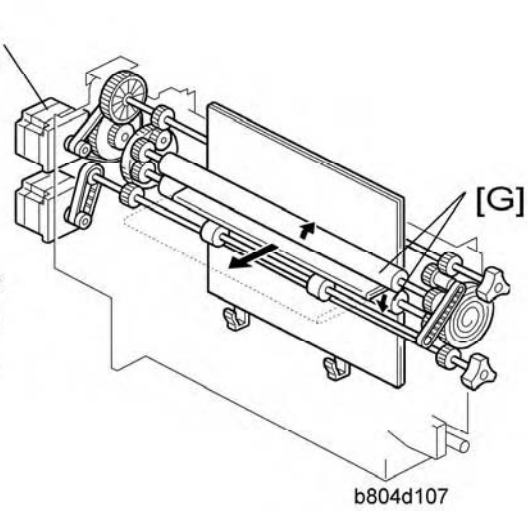

Fold Plate

[A]: Bottom Fence Stack Stoppers. Catches the stack after it is released by the clamp rollers.

[B]: Fold Plate Motor. Drives the timing belt and gears that move the fold plate.

[C]: Fold Plate Cam. Controls the movement of the fold plate to the left (into the nip of the fold rollers) and right (toward the fold plate home position).

[D]: Fold Plate HP Sensor. Controls operation of the fold plate motor.

[E]: Fold Plate. Moves left and pushes the stack into the nip of the fold rollers and then moves right to retract.

Fold Rollers

[F]: Fold Roller Motor. Drives forward to feed out the stack at the fold and then reverses to feed the fold in to sharpen the crease, and then drives forward again to feed out the folded stack. This reverse/forward cycle is done once.

Note

- This cycle can be repeated by changing the setting of SP6114.

[G]: Fold Rollers. Driven by the fold roller motor, this roller pair feeds out the stack at its fold, reverses to feed in the stack to, and then feeds forward again (assisted by the fold unit exit rollers – not shown) to feed out the stack to the lower tray.

WWW.SERVICE-MANUAL.NET

2.7 UPPER TRAY OUTPUT

2.7.1 FEED OUT

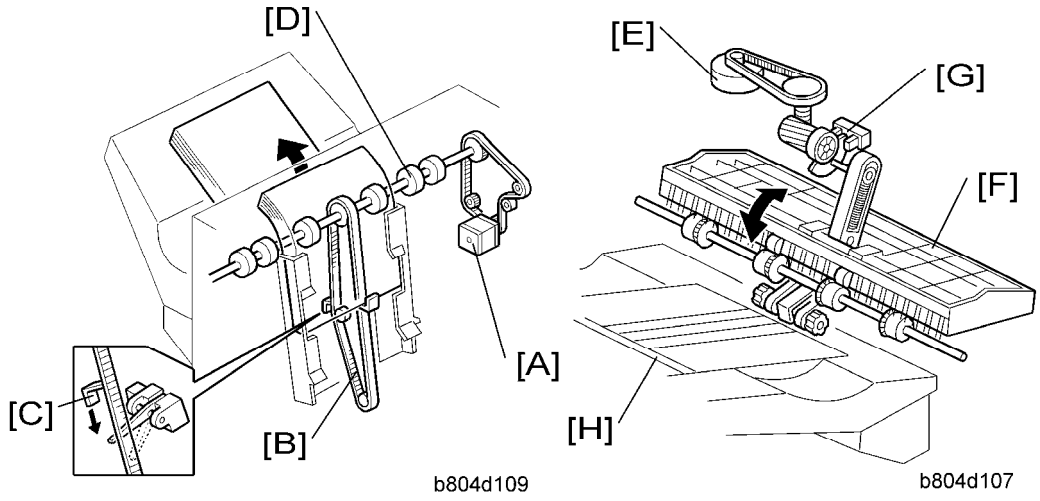

[A]: Feed Out Belt Motor
[B]: Stack Feed-Out Belt
[C]: Pawl
[D]: Exit Rollers
[E]: Exit Guide Plate Motor
[F]: Exit Guide Plate
[G]: Exit Guide Plate HP Sensor
[H]: Upper Tray

After the stack is stapled, the feed out belt motor [A] switches on and drives the feed out belt [B].
The pawl [C] attached to the feed out belt catches on the stack and lifts the stack toward the feed out slot.
The exit guide plate [F] remains open as the stack emerges at a prescribed distance away from the exit roller.
Next, the exit guide plate closes and the exit roller feeds the stack out.
The opening and closing of the exit guide plate is controlled by the rising and falling of a link driven by a rotating cam attached to the shaft of the exit guide plate motor [E].

WWW.SERVICE-MANUAL.NET

The feed out belt motor stops 300 ms to prevent the stapled stack from rising too high. Next, the feed out belt motor switches on again, then the pawl actuates its home position sensor and switches off the motor.

There are two output pawls on the feed out belt to improve the productivity of the feed out operation.

2.7.2 FEED OUT STACKING

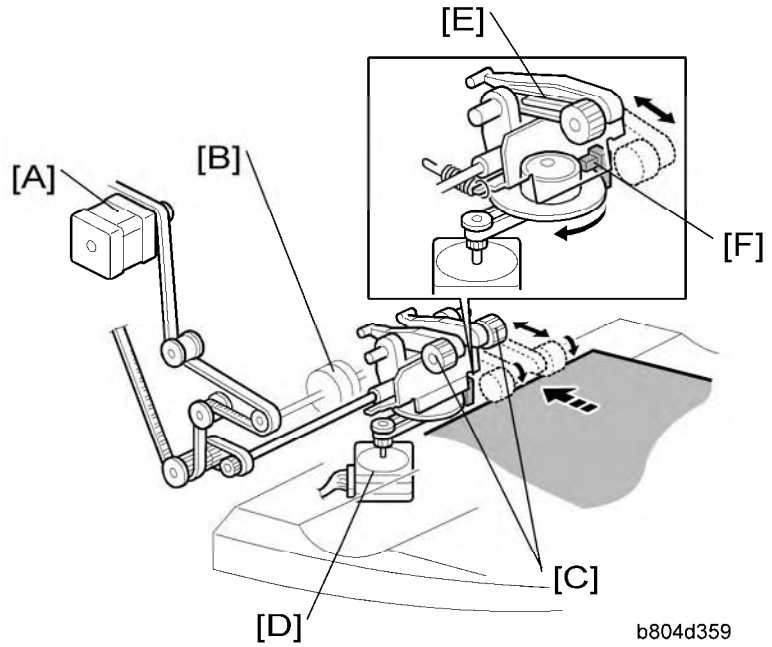

Upper/proof exit motor [A] drives feed roller [B] and stacking sponge roller [C].

Stacking sponge roller motor [D] moves the sponge roller forward and back with link [E].

The position of the stacking sponge roller [C] is controlled by the stacking sponge roller motor which is switched on and off by the stacking roller HP sensor [F].

WWW.SERVICE-MANUAL.NET

2.8 PUNCH UNIT B702 (FOR B804/B805)

2.8.1 OVERVIEW OF OPERATION

Skew Correction before Punching

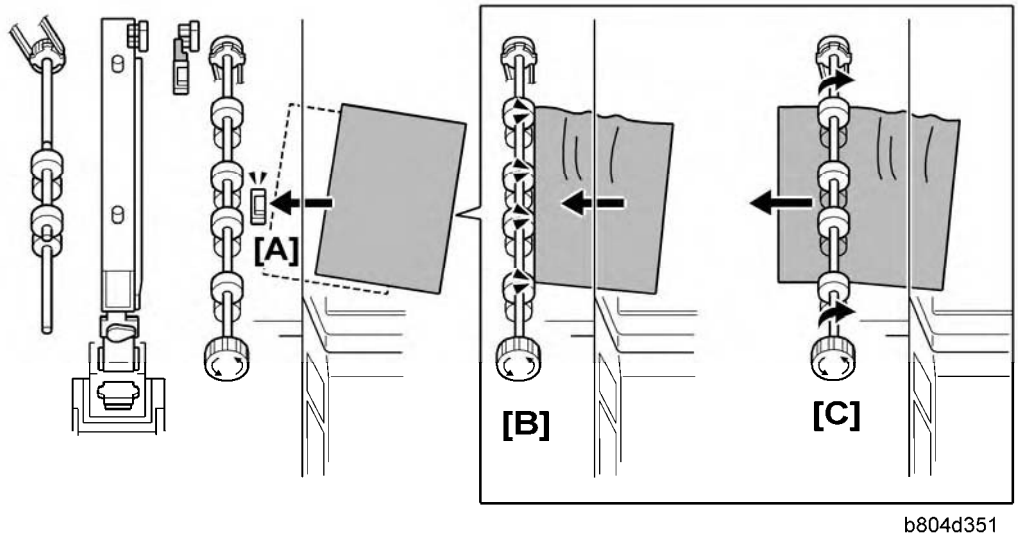

This punch unit corrects for paper skew and then positions the punch unit to punch holes at the correct position. Each sheet is punched one at a time.

Paper feeds out of the copier. The finisher entrance sensor [A] detects the leading edge of the sheet.

The finisher entrance roller [B] stops rotating briefly while the copier exit rollers continue to rotate. This buckles the paper against the finisher entrance roller to correct skew. The finisher entrance roller [C] starts to rotate again and feeds the sheet into the finisher.

These SP codes adjust the skew operation in the punch unit:

- **SP6130**. This SP corrects the punch hole alignment. To do this, it corrects the skew of each sheet by adjusting the amount of time the finisher entrance roller remains off while the exit roller of the machine remains on. For more, see Section "Service Tables".
- **SP6131**. This SP determines whether the finisher entrance roller stops to correct skew when paper enters the finisher. You can use this SP to disable the skew correction. For more, see Section "Service Tables".

WWW.SERVICE-MANUAL.NET

Punch Unit Position Correction

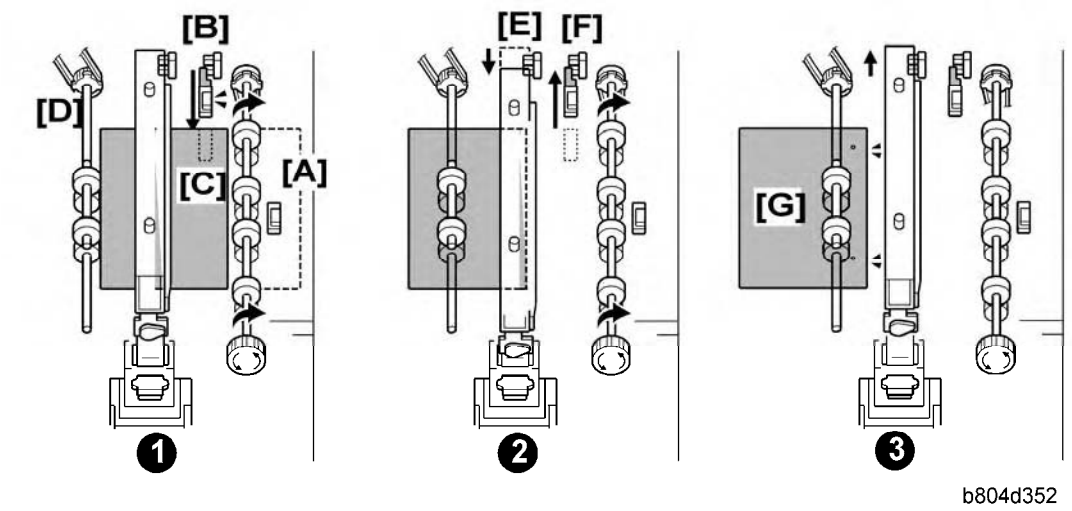

These operations (skew correction before punching, and punch unit position correction) increase the accuracy of the punch alignment.

❶:

The trailing edge of the sheet passes the finisher entrance sensor [A].

The paper position slide unit [B] moves the paper position sensor [C] forward to the edge of the paper.

The paper position sensor detects the position of the paper edge and sends this information to the punch unit board. The machine uses the detected position of the paper edge to calculate the correct position for punching.

The upper transport motor switches on and rotates the feed rollers [D] the prescribed distance to position the paper under the punch unit.

❷:

Using the result of the position calculation, the punch unit control board moves the punch unit [E] to the adjusted punch position.

The paper position slide unit and its paper sensor, move back to the paper position slide home position sensor [F], and the punch unit fires the punches to make the holes.

❸:

The feed rollers [G] feed the punched paper out of the punch unit and into the paper path.

WWW.SERVICE-MANUAL.NET

Punch Unit B702 (For B804/B805)

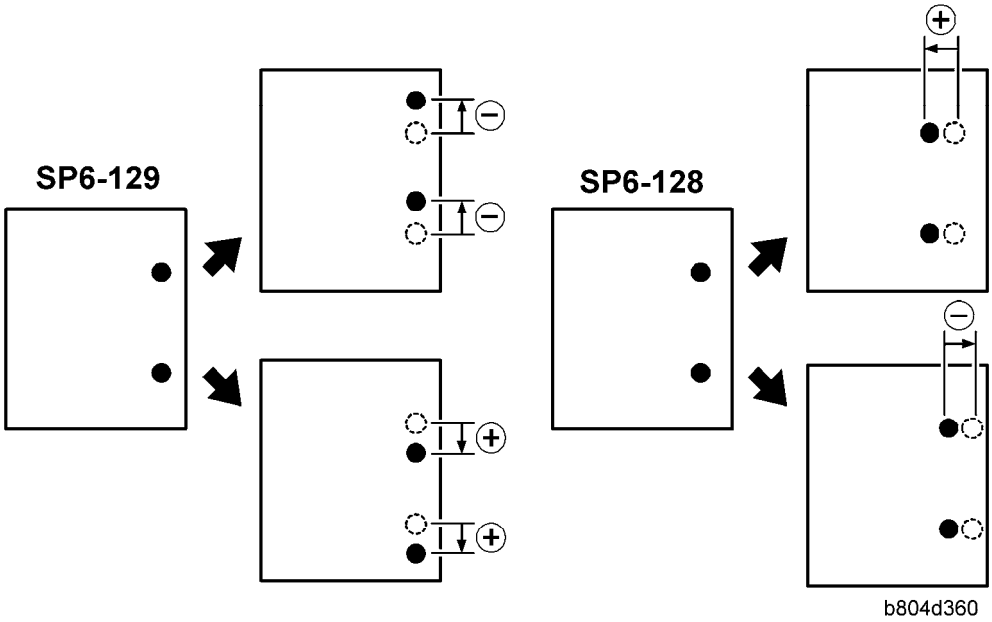

These SP codes adjust the punch hole alignment:

- **SP6-128** Adjusts the punch positions in the direction of paper feed.
- **SP6-129** Adjusts the punch position perpendicular to the direction of feed.

For more, see Section "Service Tables".

2.8.2 PUNCH MECHANISMS

Paper Position Detection

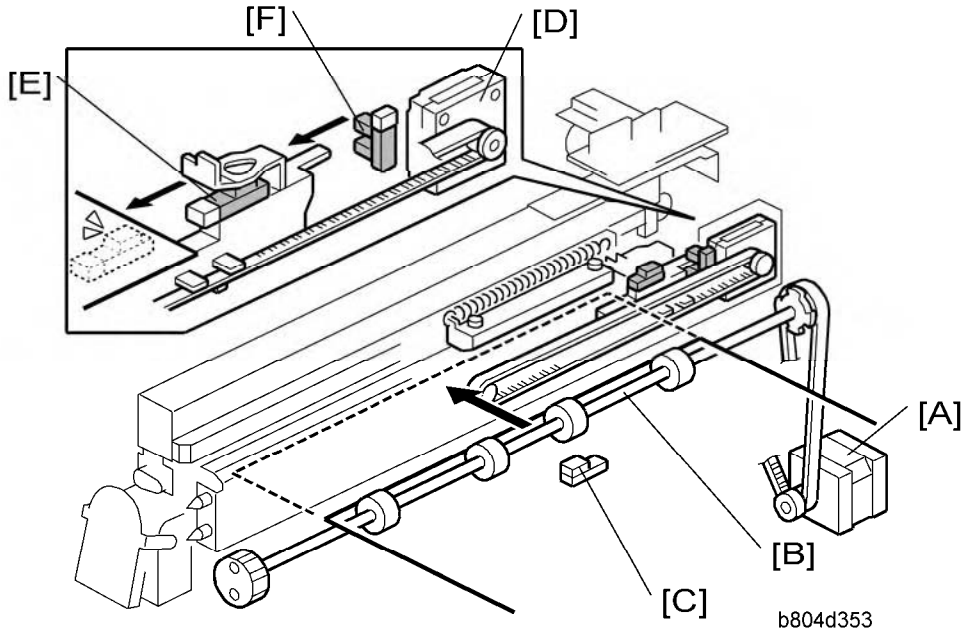

WWW.SERVICE-MANUAL.NET

[A]: Finisher Entrance Motor (M1)
[B]: Finisher Entrance Roller
[C]: Finisher Entrance Sensor (S1)
[D]: Paper Position Sensor Slide Motor (M7)
[E]: Paper Position Sensor (S27)
[F]: Paper Position Sensor Slide HP Sensor (S22)

The finisher entrance motor (M1) [A] drives the finisher entrance rollers [B] that feed paper from the copier into the finisher. The finisher entrance sensor (S1) [C] detects paper when it enters the finisher, and detects paper jams.
The paper position slide sensor motor (M7) [D] extends and retracts the paper position slide that holds the paper position sensor (S27) [E]. The paper position sensor detects the position of the paper edge. The detected position of the paper is used to calculate and position the punch unit for punching.
The paper position slide HP sensor (S22) [F] detects the paper position slide when it retracts and stops the paper position slide motor so the slide stops at its home position.

Punch Unit Movement

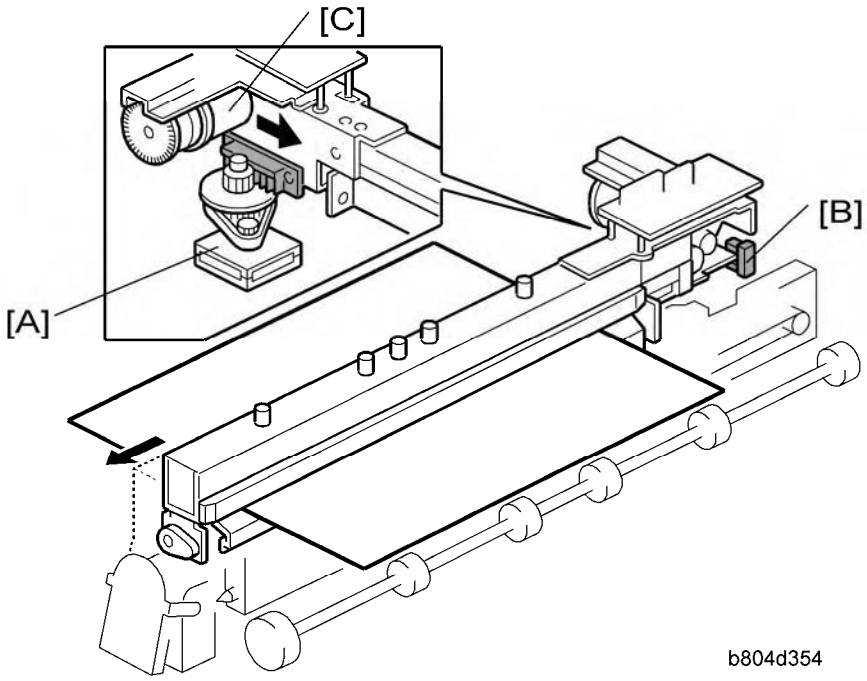

WWW.SERVICE-MANUAL.NET

Punch Unit B702 (For B804/B805)

[A]: Punch Movement Motor (M9)
[B]: Punch Movement HP Sensor (S21)
[C]: Punch Drive Motor (M24)

The punch movement motor (M9) [A] extends and retracts the punch unit to position it at the correct position for punching.
The punch movement HP sensor (S21) [B] detects the position when it retracts, switches off the punch position movement motor, and stops the punch unit at its home position.
The punch drive motor (M24) [C] fires the punches that punch holes in the paper below.

Punch Selection and Firing

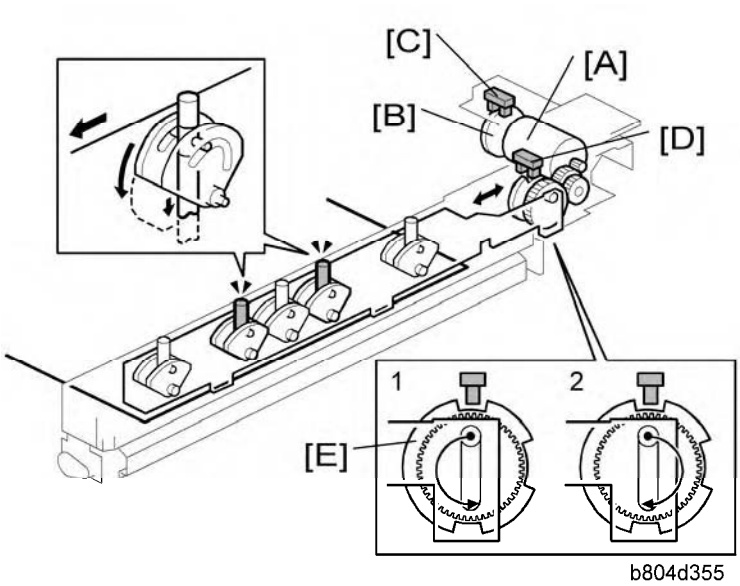

[A]: Punch Drive Motor (M24)
[B]: Punch Encoder Wheel
[C]: Punch Encoder Sensor (S24)
[D]: Punch HP Sensor (S23)

The punch drive motor (M24) [A] turns the small, notched encoder wheel [B] through the gap in the punch encoder sensor [C] (S24). The sensor output is used to control the punch timing.

WWW.SERVICE-MANUAL.NET

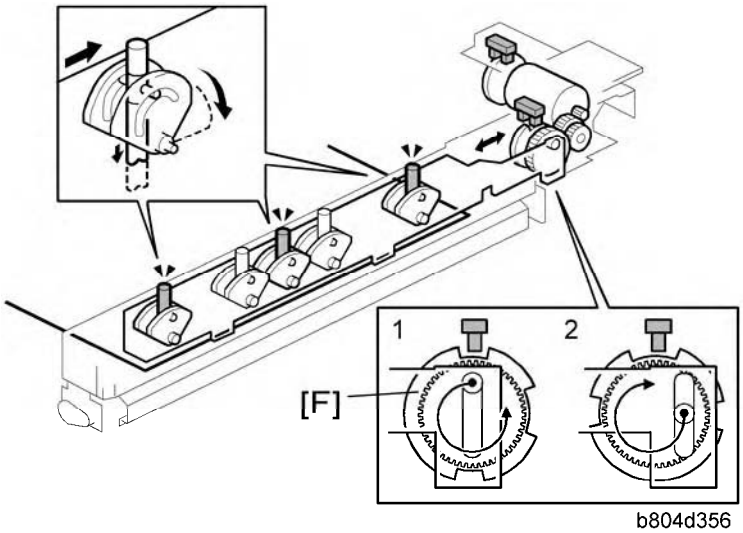

The timing for 2-hole punching [E] is different from 3-hole punching [F].

When the punch unit is at the punching position, the punch motor turns until the encoder detects the starting position for 2-hole or 3-hole punching.

- This is the '1' position in the diagrams (the top diagram is for 2-hole punching, and the bottom diagram is for 3-hole punching).

Then, the punch drive motor turns counter-clockwise to the '2' position. This movement punches the holes in the paper.

Then, the punch drive motor turns clockwise to the '1' position, to be ready for the next sheet of paper.

2.8.3 PUNCH HOPPER MECHANISM

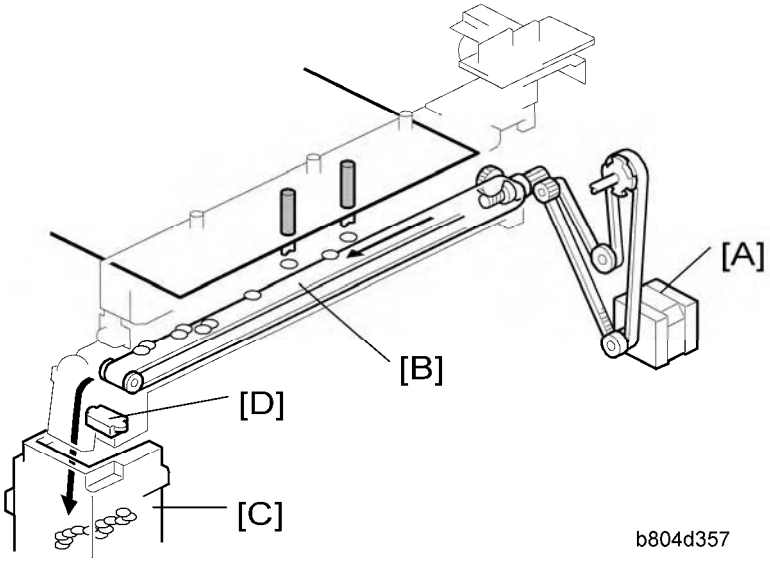

WWW.SERVICE-MANUAL.NET

Punch Unit B702 (For B804/B805)

[A]: Finisher Entrance Motor (M1)
[B]: Punch Waste Belt
[C]: Punch Waste Hopper
[D]: Punch Hopper Full Sensor (S4)

The finisher entrance motor (M1) [A] drives the timing belt and gears that rotate the punch waste belt [B].

The punchouts fall from the punch unit onto the belt. The belt moves the punchouts to the front and dumps them in the punch waste hopper [C].

The punch hopper full sensor [D]:

- Signals that the hopper is full when it detects the top of the stack of punchouts that have collected in the hopper.
- It also detects when the punch hopper is set properly.

WWW.SERVICE-MANUAL.NET

2.9 FINISHER JAM DETECTION

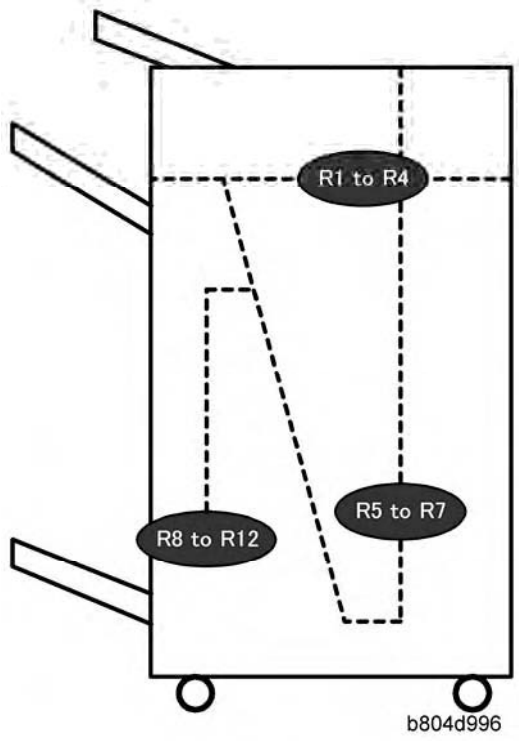

Display	Mode	Jam	What It Means
R1 to R3	Proof Shift Staple	Finisher entrance sensor late	After main machine exit sensor goes OFF, finisher entrance sensor does not go ON even after enough time to feed 450 mm.
		Finisher entrance sensor lag	After finisher entrance sensor goes ON, it does not go OFF after enough time to feed a sheet 1.5 times its length has elapsed.
R3	Proof	Proof exit sensor late	After finisher entrance sensor goes ON, proof exit sensor does not go ON even after enough time to feed 450 mm.
		Proof exit sensor lag	After finisher entrance sensor goes OFF, proof exit sensor does not go OFF even after enough time to feed 450 mm.

WWW.SERVICE-MANUAL.NET

Finisher Jam Detection

Display	Mode	Jam	What It Means
R4	Shift	Upper tray exit sensor late	After finisher entrance sensor goes ON, upper tray exit sensor does not go ON even after enough time to feed 485 mm.
		Upper tray exit sensor lag	After finisher entrance sensor goes OFF, upper tray exit sensor does not go OFF even after enough time to feed 650 mm.
R5 to R7	Staple	Pre-stack tray exit sensor lag	After finisher entrance sensor goes ON, pre-stack tray exit sensor does not go ON even after enough time to feed 650 mm.
		Pre-stack tray exit sensor late	After finisher entrance sensor goes ON, pre-stack tray exit sensor does not go OFF even after enough time to feed 1650 mm.
R8 to R12	Booklet Staple (B700 Only)	Fold unit entrance sensor late (S26)	The fold unit entrance sensor goes not go ON after enough time has elapsed to feed 1.5 times the length of the stack after the leading edge of the stack reaches the stack present sensor (S32).
		Fold unit exit sensor late (S31)	The fold unit exit sensor does not go ON after enough time has elapsed for the stack to feed 1.5 times its length from the fold position.
		Fold unit exit sensor lag (S31)	After the fold unit exit sensor goes ON, it does not go OFF after enough time has elapsed to feed 442.9 mm.

WWW.SERVICE-MANUAL.NET

WWW.SERVICE-MANUAL.NET

BRIDGE UNIT BU3030

D386

D386 BRIDGE UNIT BU3030		
Page	**Date**	**Added/Updated/New**
		None

WWW.SERVICE-MANUAL.NET

WWW.SERVICE-MANUAL.NET

BRIDGE UNIT BU3030 (D386)

TABLE OF CONTENTS

1. REPLACEMENT AND ADJUSTMENT 1
1.1 BRIDGE UNIT CONTROL BOARD.....1
1.2 BRIDGE UNIT DRIVE MOTOR.....2
1.3 TRAY EXIT SENSOR 3
1.4 RELAY SENSOR 4

2. DETAILS 5
2.1 MECHANICAL COMPONENT LAYOUT 5
2.2 DRIVE LAYOUT.....6
2.3 ELECTRICAL COMPONENT LAYOUT 7
2.4 ELECTRICAL COMPONENT DESCRIPTION 8
2.5 JUNCTION GATE MECHANISM 9

WWW.SERVICE-MANUAL.NET

WWW.SERVICE-MANUAL.NET

Read This First

Safety and Symbols

Replacement Procedure Safety

⚠CAUTION

- Turn off the main power switch and unplug the machine before beginning any of the replacement procedures in this manual.

When taking apart the bridge unit, first take the unit out of the copier.

Symbols Used in this Manual

This manual uses the following symbols.

☛: See or Refer to

: Screws

: Connector

: Clip ring

: E-ring

WWW.SERVICE-MANUAL.NET

WWW.SERVICE-MANUAL.NET

1. REPLACEMENT AND ADJUSTMENT

1.1 BRIDGE UNIT CONTROL BOARD

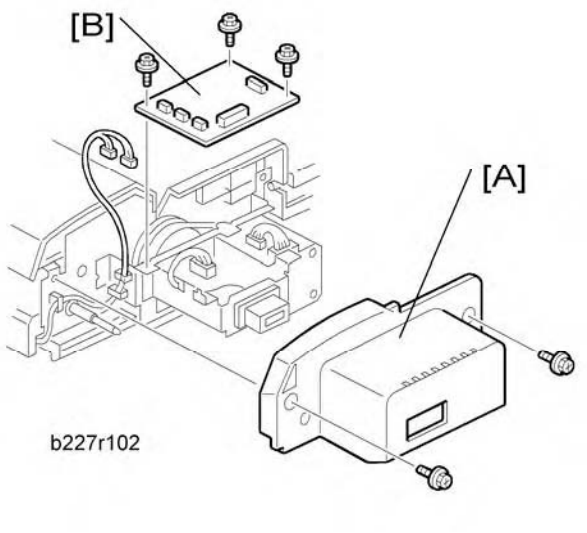

1. Bridge unit (☛ "Installation Procedure" in the base copier manual)
2. Rear cover [A] (🔩 x 2)
3. Bridge unit control board [B] (🔩 x 3, ✋ x 4)

WWW.SERVICE-MANUAL.NET

1.2 BRIDGE UNIT DRIVE MOTOR

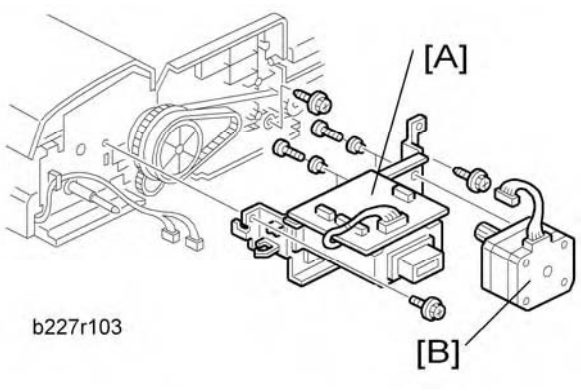

1. Bridge unit (☛ "Installation Procedure" in the base copier manual)
2. Rear cover (☛ "Bridge Unit Control Board")
3. Bracket [A] (🔩 x 3, ✋ x 2)
4. Bridge unit drive motor [B] (🔩 x 4, ✋ x 1)

WWW.SERVICE-MANUAL.NET

1.3 TRAY EXIT SENSOR

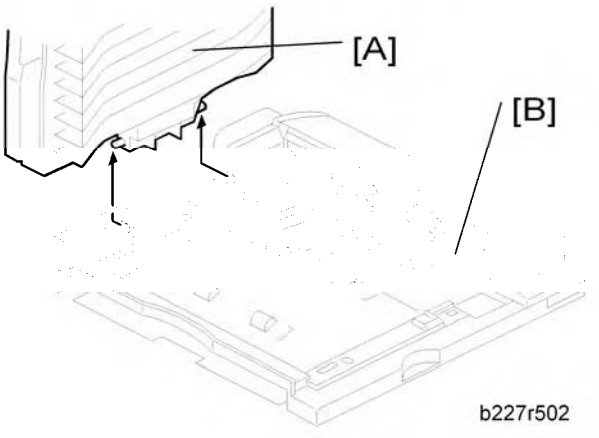

1. Bridge unit (☛ "Installation Procedure" in the base copier manual)
2. Rear cover (☛ "Bridge Unit Control Board")
3. Paper tray [A]
4. Exit guide [B] (🖉 x 1)

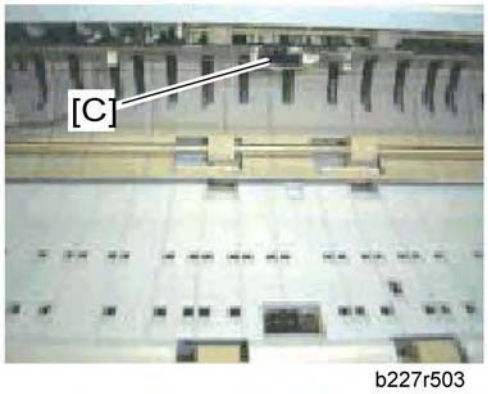

5. Tray exit sensor [C] (🗐 x 1)

WWW.SERVICE-MANUAL.NET

1.4 RELAY SENSOR

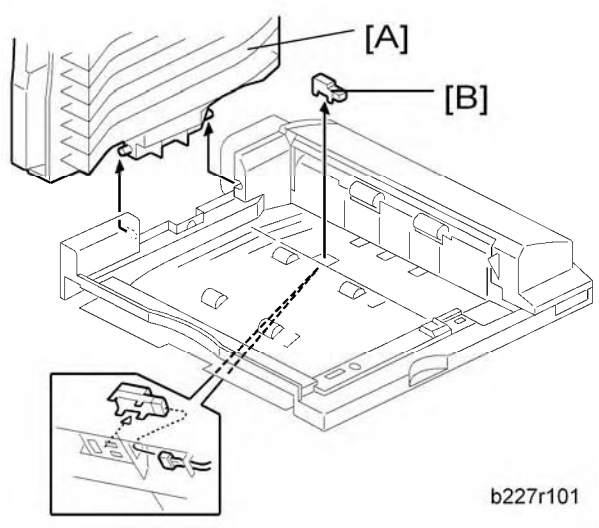

1. Bridge unit (☛ "Installation Procedure" in the base copier manual)
2. Paper tray [A]
3. Relay sensor [B] (☶ x 1)

WWW.SERVICE-MANUAL.NET

2. DETAILS

2.1 MECHANICAL COMPONENT LAYOUT

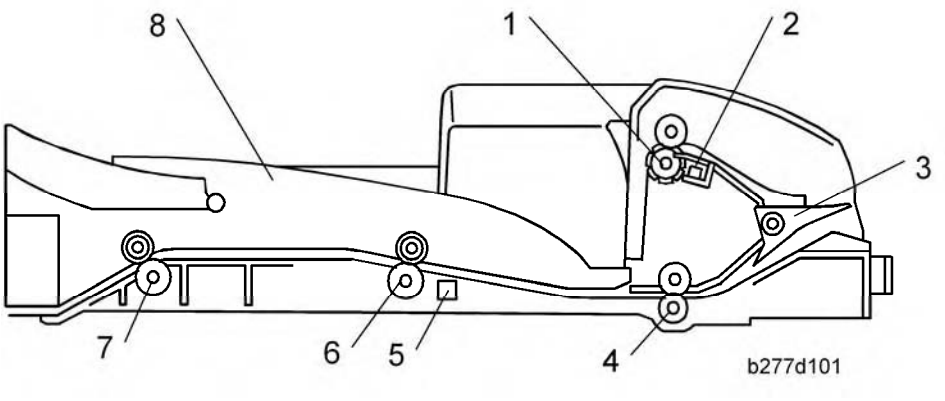

1. Upper Exit Roller	5. Relay Sensor
2. Tray Exit Sensor	6. 2nd Transport Roller
3. Junction Gate	7. Left Exit Roller
4. 1st Transport Roller	8. Paper Tray

WWW.SERVICE-MANUAL.NET

2.2 DRIVE LAYOUT

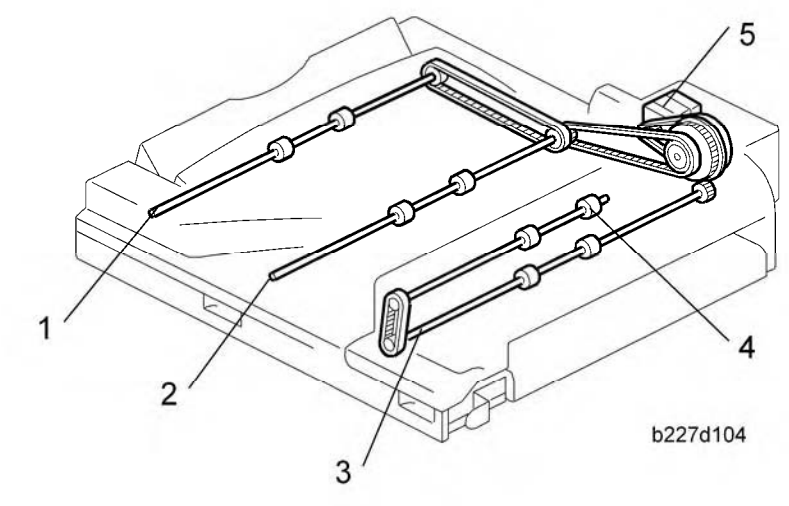

1. Left Exit Roller
2. 2nd Transport Roller
3. 1st Transport Roller
4. Upper Exit Roller
5. Bridge Unit Drive Motor

WWW.SERVICE-MANUAL.NET

2.3 ELECTRICAL COMPONENT LAYOUT

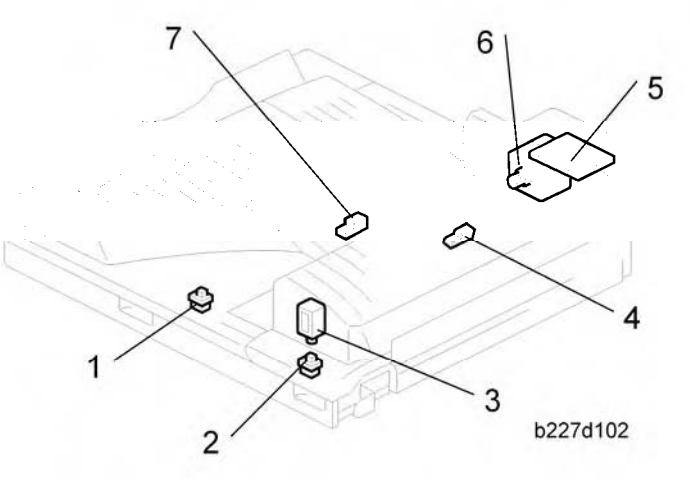

1. Left Guide Switch
2. Right Guide Switch
3. Junction Gate Solenoid
4. Tray Exit Sensor
5. Bridge Unit Control Board
6. Bridge Unit Drive Motor
7. Relay Sensor

WWW.SERVICE-MANUAL.NET

2.4 ELECTRICAL COMPONENT DESCRIPTION

Symbol	Name	Function	Index No.
Motors			
M1	Drive Motor	Drives the bridge unit.	6
Sensors			
S1	Tray Exit	Checks for misfeeds.	4
S2	Relay	Checks for misfeeds.	7
Switches			
SW2	Right Guide	Detects when the right guide is opened.	2
SW3	Left Guide	Detects when the left guide is opened.	1
Solenoids			
SOL1	Junction Gate	Moves the junction gate to direct the paper to the upper tray (on top of the bridge unit) or to the finisher.	3
PCBs			
PCB1	Bridge Unit Control Board	Controls the bridge unit.	5

WWW.SERVICE-MANUAL.NET

2.5 JUNCTION GATE MECHANISM

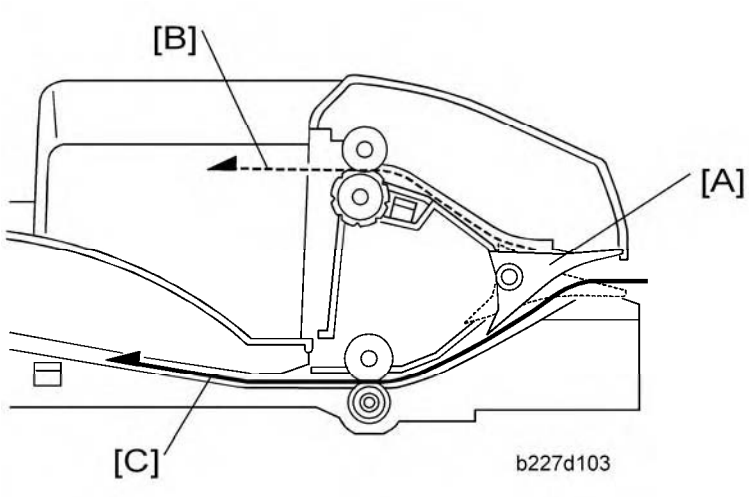

The junction gate [A] directs any paper reaching the bridge unit to either the upper tray (on top of the bridge unit) or to the finisher, depending on which has been selected.
If the junction gate solenoid has been activated, the junction gate [A] points downward and directs the paper to the upper tray [B] (dotted line path in illustration). When the solenoid is off, the junction gate points upward and the paper is fed out to the finisher [C] by the transport and left exit rollers (solid line).

WWW.SERVICE-MANUAL.NET

WWW.SERVICE-MANUAL.NET

Internal Shift Tray SH3040

(D388)

D388 INTERNAL SHIFT TRAY SH3040		
Page	**Date**	**Added/Updated/New**
		None

WWW.SERVICE-MANUAL.NET

WWW.SERVICE-MANUAL.NET

Internal Shift Tray SH3040 (D388)

TABLE OF CONTENTS

1. REPLACEMENT AND ADJUSTMENT 1

1.1 TRAY COVER..... 1

– When Attaching the Tray Cover – 1

1.2 TRAY MOTOR AND HALF TURN SENSOR BOARD..... 2

WWW.SERVICE-MANUAL.NET

WWW.SERVICE-MANUAL.NET

Read This First

Safety and Symbols

Replacement Procedure Safety

⚠CAUTION

- Turn off the main power switch and unplug the machine before beginning any of the replacement procedures in this manual.

Symbols Used in this Manual

This manual uses the following symbols.

☛: See or Refer to

: Screws

: Connector

: Clip ring

: Clamp

: E-ring

WWW.SERVICE-MANUAL.NET

WWW.SERVICE-MANUAL.NET

1. REPLACEMENT AND ADJUSTMENT

1.1 TRAY COVER

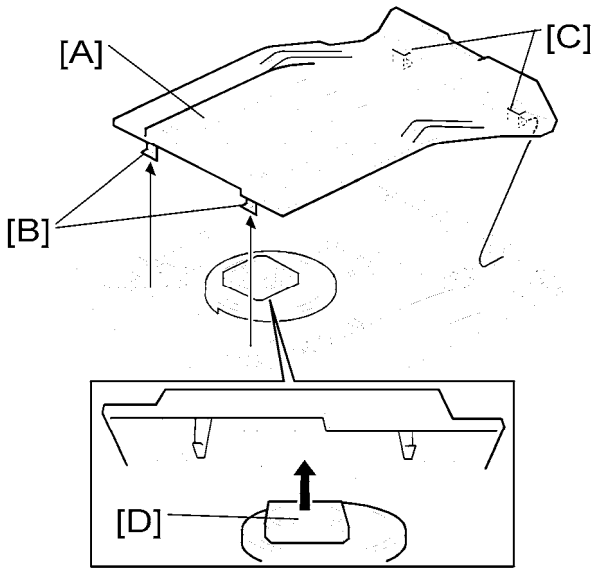

1. Remove the tray cover [A] by pressing on the two pawls [B] on the left side of the cover.

– When Attaching the Tray Cover –

Note

- The right side of the tray cover should be attached first.

1. Fit the pawls [C] on the shift tray.
2. Align the square [D] so that it fits into the groove in the underside of the tray cover and does not interfere with the attachment of the cover.
3. Complete the attachment by inserting the left side pawls [B] into place.

WWW.SERVICE-MANUAL.NET

1.2 TRAY MOTOR AND HALF TURN SENSOR BOARD

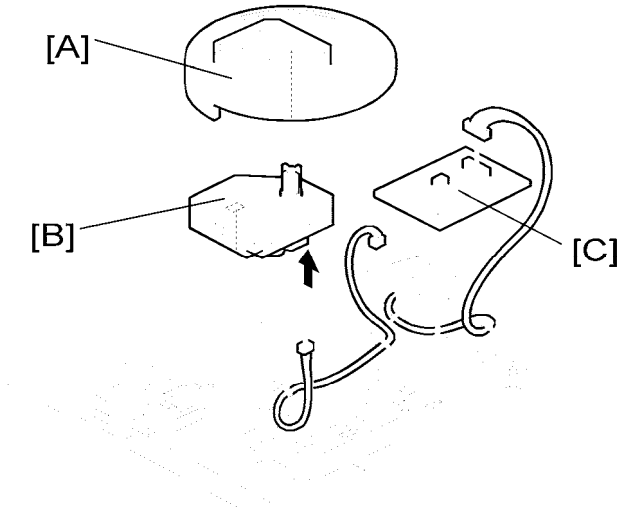

1. Top cover (☛ p.1 "Tray Cover")
2. Slip disc [A]
3. Tray motor [B] (✋ x 1)
4. Half turn sensor board [C] (✋ x 1).

WWW.SERVICE-MANUAL.NET

Fax Option Type C5000

(D393)

D393 FAX OPTION TYPE C5000		
Page	**Date**	**Added/Updated/New**
159	02/02/2009	Service Ram Address
158 ~ 160	12/11/2009	Service Ram Address
158 ~ 160	05/14/2009	Service Ram Addresses

WWW.SERVICE-MANUAL.NET

WWW.SERVICE-MANUAL.NET

Fax Option Type C5000 (D393)

Table of Contents

1. INSTALLATION PROCEDURE 1

1.1 FAX UNIT (D393) 1

1.1.1 COMPONENT CHECK 1

1.1.2 INSTALLATION PROCEDURE 3

1.2 FAX UNIT OPTIONS 9

1.2.1 MEMORY UNIT (G578) 9

1.2.2 HANDSET (B433) 9

For D023/D025 9

For D027/ D029 11

1.3 G3 INTERFACE UNIT (D393) 14

1.3.1 COMPONENT CHECK 14

1.3.2 INSTALLATION PROCEDURE 16

For Installing the single G3 Board 16

For Installing the Double G3 Boards 19

2. REPLACEMENT AND ADJUSTMENT 22

2.1 FCU 22

3. TROUBLESHOOTING 23

3.1 ERROR CODES 23

3.2 IFAX TROUBLESHOOTING 44

3.3 IP-FAX TROUBLESHOOTING 47

3.3.1 IP-FAX TRANSMISSION 47

Cannot send by IP Address/Host Name 47

Cannot send via VoIP Gateway 48

Cannot send by Alias Fax number. 49

3.3.2 IP-FAX RECEPTION 51

Cannot receive via IP Address/Host Name. 51

Cannot receive by VoIP Gateway 51

WWW.SERVICE-MANUAL.NET

Cannot receive by Alias Fax number 52

4. SERVICE TABLE 55

4.1 BEFOREHAND 55
4.2 SERVICE TABLES 56
4.2.1 SP1-XXX (BIT SWITCHES) 56
4.2.2 SP2-XXX (RAM DATA) 58
4.2.3 SP3-XXX (TEL LINE SETTINGS) 59
4.2.4 SP4-XXX (ROM VERSIONS) 61
4.2.5 SP5-XXX (INITIALIZING) 62
4.2.6 SP6-XXX (REPORTS) 63
4.2.7 SP7-XXX (TEST MODES) 66
4.3 BIT SWITCHES 68
4.3.1 SYSTEM SWITCHES 68
4.3.2 I-FAX SWITCHES 81
4.3.3 PRINTER SWITCHES 88
4.3.4 COMMUNICATION SWITCHES 95
4.3.5 G3 SWITCHES 104
4.3.6 G3-2/3 SWITCHES 114
4.3.7 IP FAX SWITCHES 123
4.4 NCU PARAMETERS 131
4.5 DEDICATED TRANSMISSION PARAMETERS 147
4.5.1 PROGRAMMING PROCEDURE 147
4.5.2 PARAMETERS 147
Fax Parameters 147
E-mail Parameters 151
4.6 SERVICE RAM ADDRESSES 155

5. SPECIFICATIONS 165

5.1 GENERAL SPECIFICATIONS 165
5.1.1 FCU 165
5.1.2 CAPABILITIES OF PROGRAMMABLE ITEMS 167
5.2 IFAX SPECIFICATIONS 169
5.3 IP-FAX SPECIFICATIONS 171
5.4 FAX UNIT CONFIGURATION 172

WWW.SERVICE-MANUAL.NET

Read This First

Important Safety Notices

WARNING

- Never install telephone wiring during a lightning storm.
- Never install telephone jacks in wet locations unless the jack is specifically designed for wet locations.
- Never touch uninsulated telephone wires or terminals unless the telephone line has been disconnected at the network interface.
- Use caution when installing or modifying telephone lines.
- Avoid using a telephone (other than a cordless type) during an electrical storm. There may be a remote risk of electric shock from lightning.
- Do not use a telephone or cellular phone to report a gas leak in the vicinity of the leak.

CAUTION

- Before installing the fax unit, switch off the main switch, and disconnect the power cord.
- The fax unit contains a lithium battery. The danger of explosion exists if a battery of this type is incorrectly replaced. Replace only with the same or an equivalent type recommended by the manufacturer. Discard batteries in accordance with the manufacturer's instructions and local regulations.

Note

- **Note for Australia**:
- Unit must be connected to Telecommunication Network through a line cord that meets the requirements of ACA Technical Standard TS008.

WWW.SERVICE-MANUAL.NET

Symbols and Abbreviations

Conventions Used in this Manual

This manual uses several symbols.

Symbol	What it means
☛	Refer to section number
	Screw
	Connector
	E-ring
	Clip ring
	Clamp

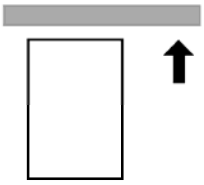

Lengthwise, SEF
(Short Edge Feed)

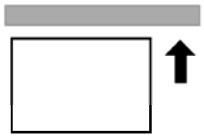

Sideways, LEF
(Long Edge Feed)

Cautions, Notes, etc.

The following headings provide special information:

⚠WARNING

- Failure to obey warning information could result in serious injury or death.

⚠CAUTION

- Obey these guidelines to ensure safe operation and prevent minor injuries.

WWW.SERVICE-MANUAL.NET

Important

- Obey these guidelines to avoid problems such as misfeeds, damage to originals, loss of valuable data and to prevent damage to the machine.
- Always obey these guidelines to avoid serious problems such as misfeeds, damage to originals, loss of valuable data and to prevent damage to the machine. bold is added for emphasis.

Note

- This document provides tips and advice about how to best service the machine.

WWW.SERVICE-MANUAL.NET

WWW.SERVICE-MANUAL.NET

1. INSTALLATION PROCEDURE

1.1 FAX UNIT (D393)

1.1.1 COMPONENT CHECK

Check the quantity and condition of the components against the following list.

No.	Description	Q'ty
1	FCU I/F Board	1
2	FCU	1
3	FCU I/F Board Bracket	1
4	Support Bracket	1
5	Speaker	1
6	Modular Bracket	1
7	Handset Bracket (NA only)	2
8	Handset Support Bracket (NA only)	1
9	Screw: M3x6 (NA only)	2
10	Telephone Cable (NA only)	1
11	Multi-Language Decals	1 (Excluding NA)/ 2 (EU)
12	Harness: TEL and LINE	2
13	G3 Decal	1
14	Serial Number Decal	1
15	FCC Decal (NA only)	1
16	Ferrite Core	1 (EU) or 2 (NA)

WWW.SERVICE-MANUAL.NET

Fax Unit (D393)

No.	Description	Q'ty
17	Screw: M3x6	13
18	Clamp	3
19	Fax Key top	2
20	EMC Address Decal	1 (EU Only)
21	Quick Reference Fax Guide	1 (Excluding EU)

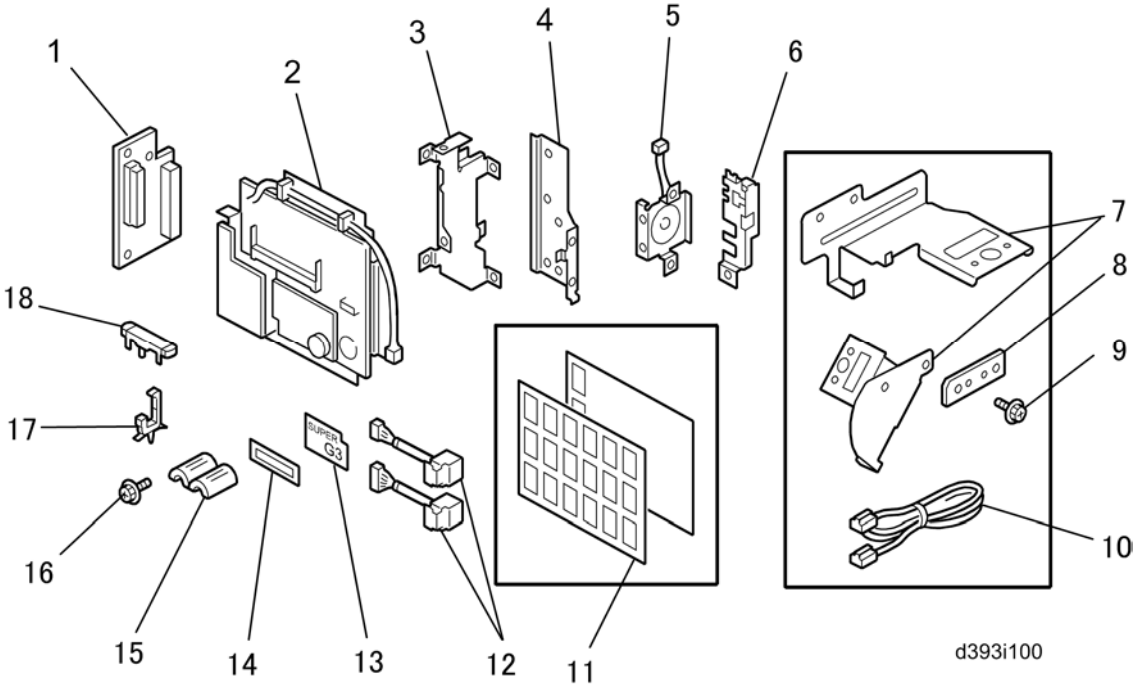

WWW.SERVICE-MANUAL.NET

1.1.2 INSTALLATION PROCEDURE

CAUTION

- **Before installing this fax unit:**
  - Print out all data in the printer buffer.
  - Turn off the main power switch and disconnect the power cord and the network cable.

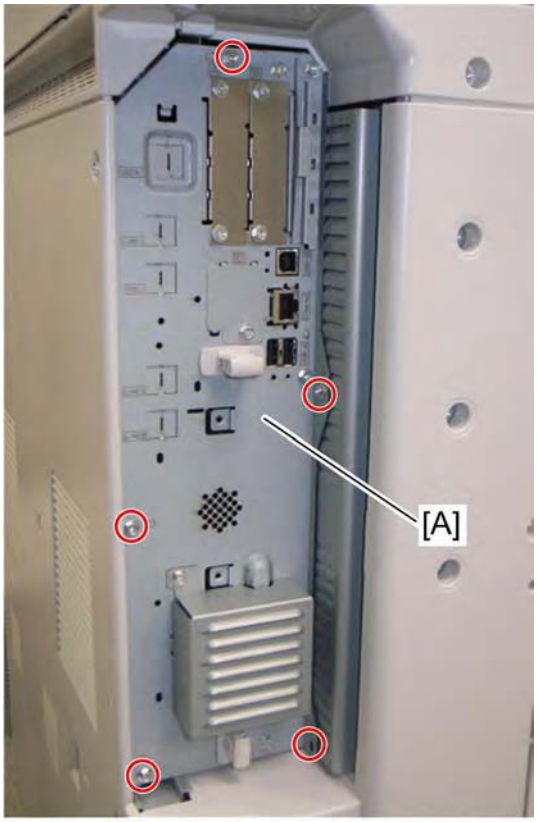

D393i075

1. Remove the controller board [A] (🔩 x 5).

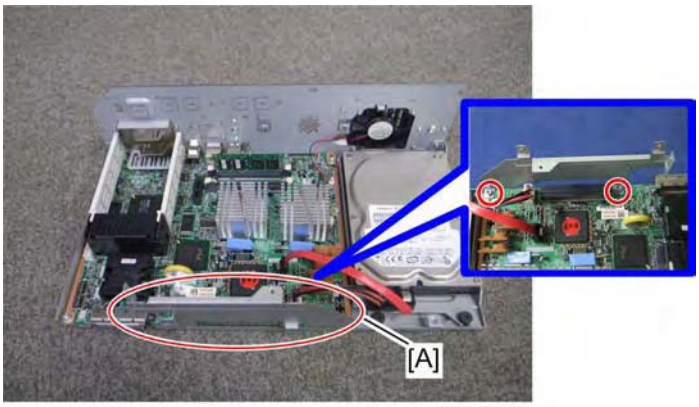

d393i008

2. Attach the FCU I/F board bracket [A] to the controller board (🔩 x 2).

WWW.SERVICE-MANUAL.NET

Fax Unit (D393)

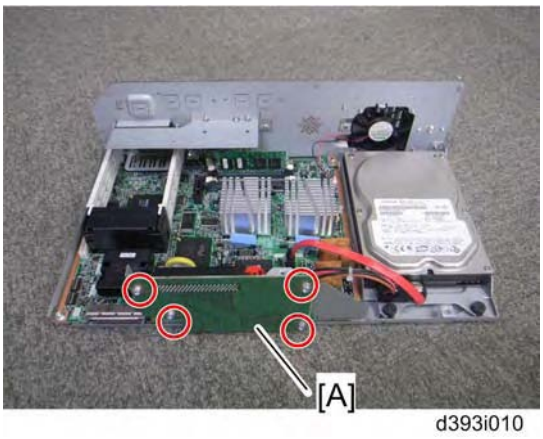

3. Attach the FCU I/F board [A] to the FCU I/F board bracket (🔩 x 4).

4. Attach the support bracket [A] to the controller box (🔩 x 2).
5. Remove the "TEL" and "LINE1" covers with a screw driver.

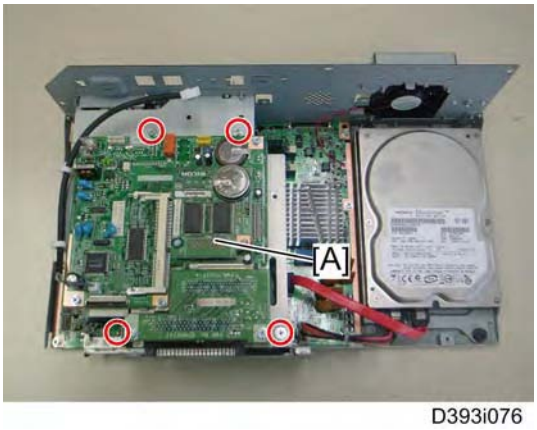

6. Install the FCU [A] to the controller board (🔩 x 4).

WWW.SERVICE-MANUAL.NET

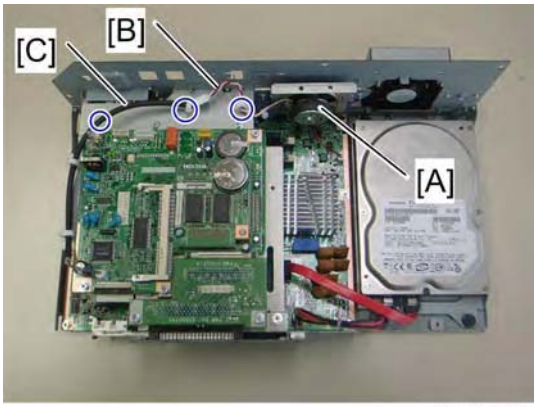

d393i077

7. Install the speaker [A] to the controller box (x 2) and connect the speaker cable [B] with the speaker relay cable [C] (x 3).

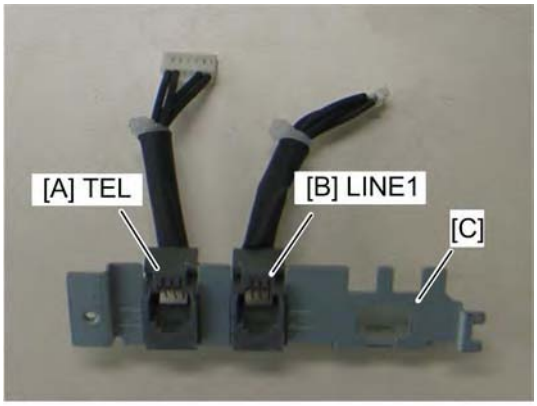

d393i094

8. Connect the two modular harnesses [A] [B] to the modular bracket [C].

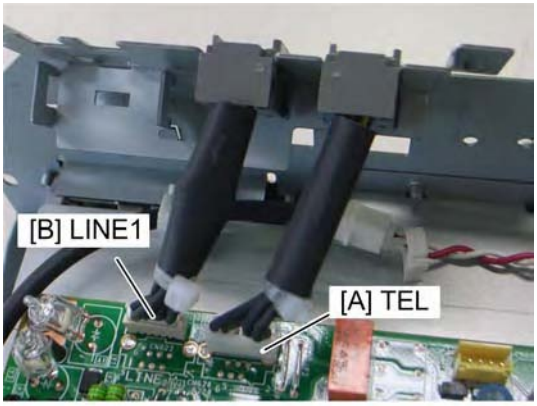

d393i095

9. Connect the two modular harnesses [A] [B] to the FCU.

WWW.SERVICE-MANUAL.NET

Fax Unit (D393)

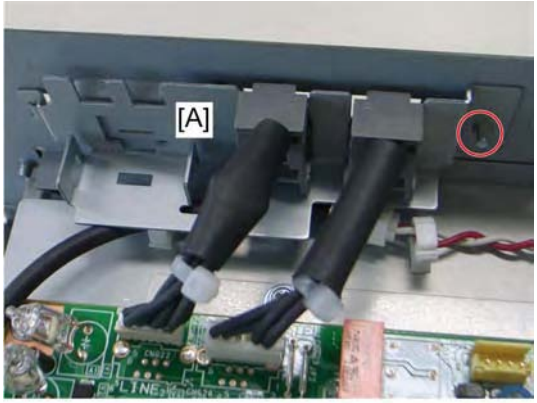

d393i096

10. Attach the modular bracket [A] to the controller box (☞x 1).

d393i068

11. Switch the MBU battery jumper switch [A] to "ON" position.

Note

- Make sure that the MBU board is firmly connected to the FCU.

12. Reinstall the controller box.
13. Attach the handset support bracket and handset bracket to the copier, and then connect the handset cord with the ferrite core to the "TEL" jack if you install the handset to the machine.

Note

- For details, refer to the "Hand Set Installation" in the Service Manual for the Fax Unit (D393).

WWW.SERVICE-MANUAL.NET

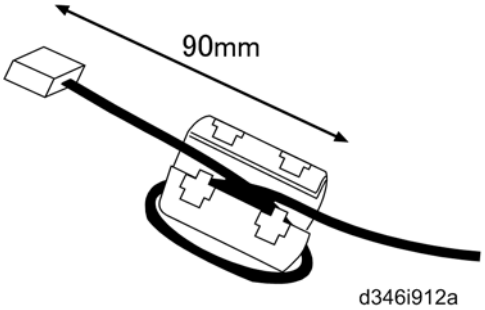

14. Attach the ferrite core to the telephone cord.
15. Connect the telephone cord to the "LINE 1" jack.

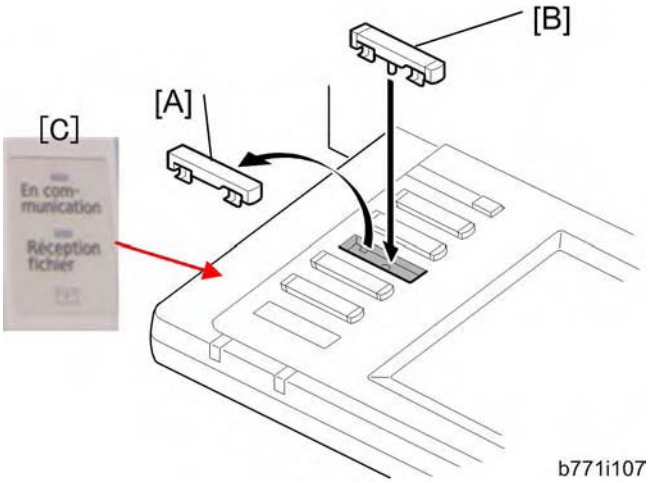

16. Replace bottom from the third key-slot cover [A] to the fax key [B].
17. Attach the Multi-Language Decals [C] (EU only).

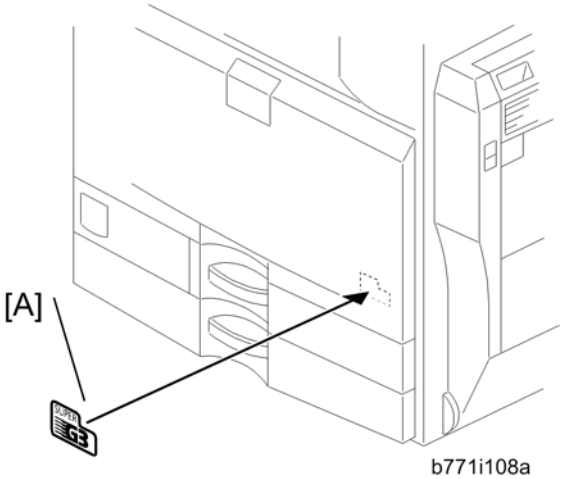

18. Attach the decal [A] (SUPER G3) to the front door.
19. Attach the serial number decal under the copier serial number decal on the rear cover of the machine.
20. Attach FCC decal on the rear cover of the machine (NA only).

WWW.SERVICE-MANUAL.NET

Fax Unit (D393)

21. Put the power plug into the outlet and turn on the main power of the machine.

Note

- Make sure that the outlet is grounded.
- "SRAM formatted" shows on the operation panel after you have turned the main switch on. Turn the main switch off and on again for normal use.

22. Make sure that the date and time are correctly set.

WWW.SERVICE-MANUAL.NET

1.2 FAX UNIT OPTIONS

1.2.1 MEMORY UNIT (G578)

1. Rear cover (☛ "Installation Procedure" in the "Fax Unit (D393)")
2. Controller box left cover (☛ "Installation Procedure" in the "Fax Unit (D393)")

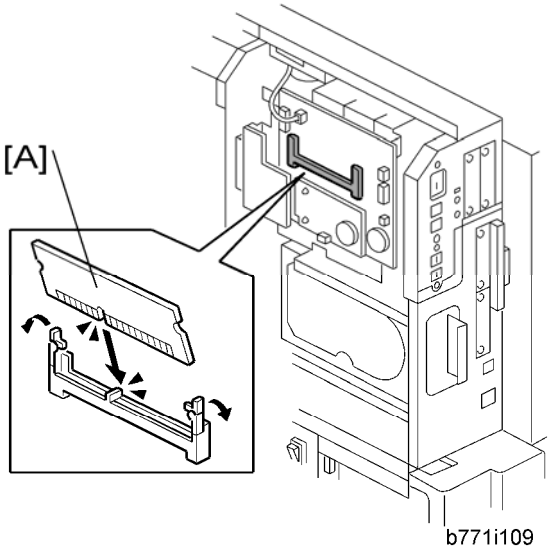

3. Install the memory option [A] on the FCU.
4. Re-aasemble the machine

1.2.2 HANDSET (B433)

For D023/D025

Note

- The optional handset is available for the U.S. version only.

For the copier without any finisher

WWW.SERVICE-MANUAL.NET

Fax Unit Options

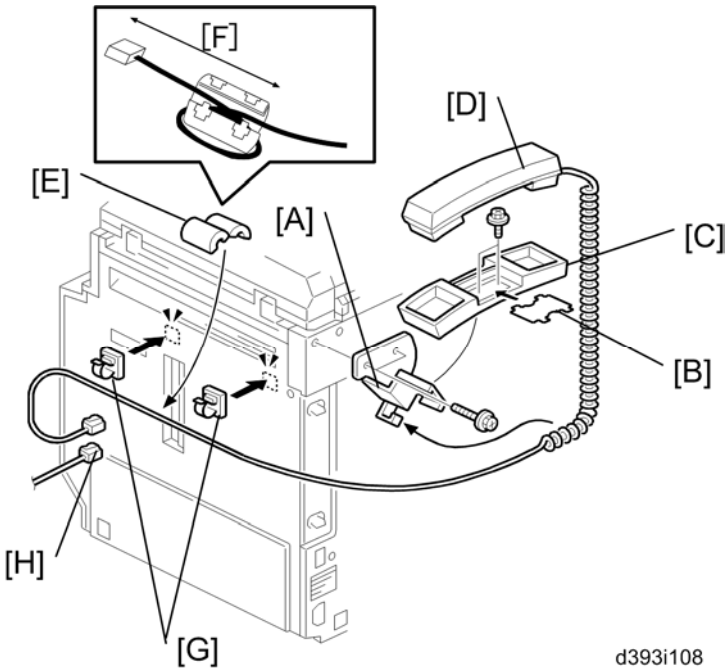

1. Make two holes in the scanner left cover.
2. Attach the bracket [A] enclosed with the fax unit (🔩 x 2: M3 x 12) as shown.
3. Remove the label [B] from the handset cradle [C]. Attach the cradle [C] to the bracket [A] (🔩 x 2: M3 x 8), and then replace the label [B].
4. Install the handset [D] on the cradle [C].
5. Attach the ferrite core [E] to the cable. The length [F] must be 90 mm.
6. Attach the two clamps [G] as shown.
7. Line the cable [H] as shown (🗎 x 2).
8. Connect the cable [H] to the "TEL" jack at the rear of the machine.

For the copier with a finisher

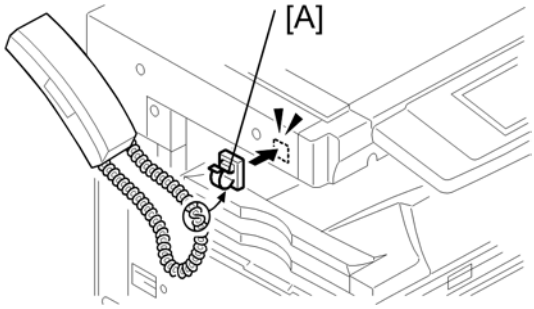

1. Do the handset installation procedure "for the copier without any finisher".
2. Attach the clamp [A] to the scanner left cover.
3. Clamp the handset cord with clamp [A].

WWW.SERVICE-MANUAL.NET

For D027/ D029

Note

- The optional handset is available for the U.S. version only.

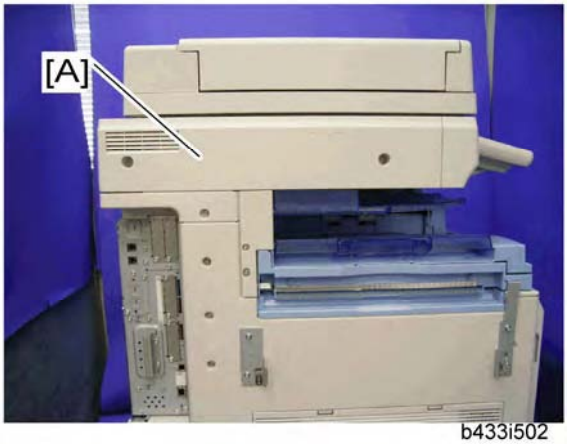

b433i502

1. Remove the scanner left cover [A] (🔩 x 2).

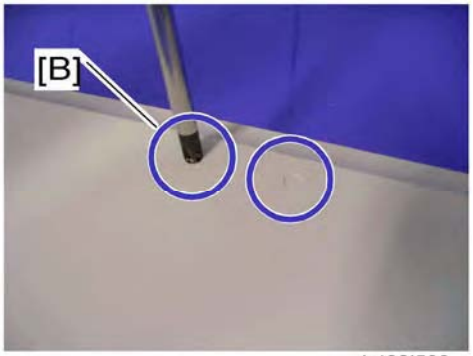

b433i503

2. Make two holes in the scanner left cover.

Note

- Drill a hole from the outside of the cover with a screwdriver.

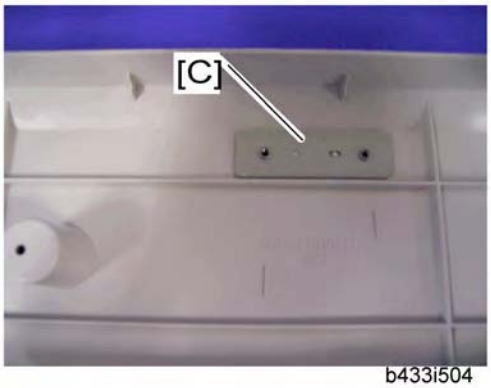

b433i504

3. Attach the hand set support bracket [C] inside the scanner left cover.

WWW.SERVICE-MANUAL.NET

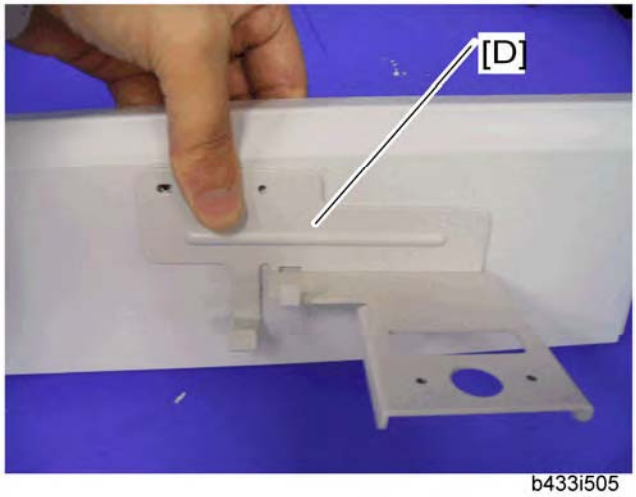

4. Hold the handset bracket [D] and handset support bracket (set inside the scanner left cover).
5. Secure the handset bracket [D] (🖉 x 2).

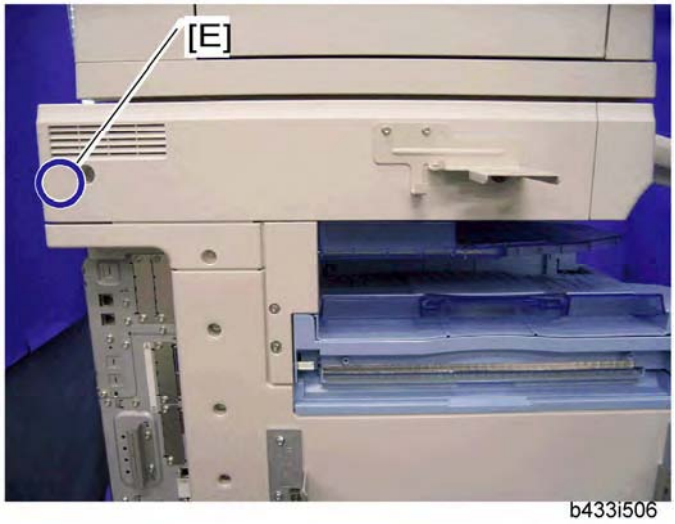

6. Install the scanner left cover on the machine.
7. Attach the clamp to the location [E].
8. Set the handset on the handset bracket.

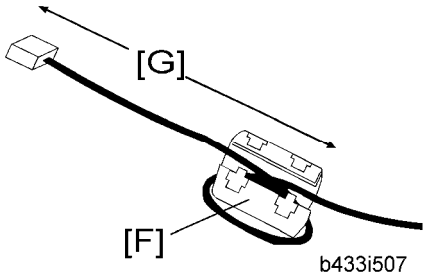

9. Put the ferrite core [F] on the handset cord as shown. The length [G] must be 90 mm.

WWW.SERVICE-MANUAL.NET

10. Clamp the hand set cord.
11. Connect the handset cable to the "TEL" jack at the rear of the machine.

WWW.SERVICE-MANUAL.NET

1.3 G3 INTERFACE UNIT (D393)

1.3.1 COMPONENT CHECK

Check the quantity and condition of the components against the following list.

No.	Description	Q'ty
1	SG3 Interface Unit	1
2	Modular Bracket for SG3	1
3	Clamp	2
4	Clamp	4
5	Screw: M3x6	6
6	Ferrite Core	1
7	Telephone Cable (NA only)	1
8	Flat Cable	1
9	Harness	1
10	EMC Address Decal (EU only)	1
11	FCC Decal (NA only)	1

WWW.SERVICE-MANUAL.NET

G3 Interface Unit (D393)

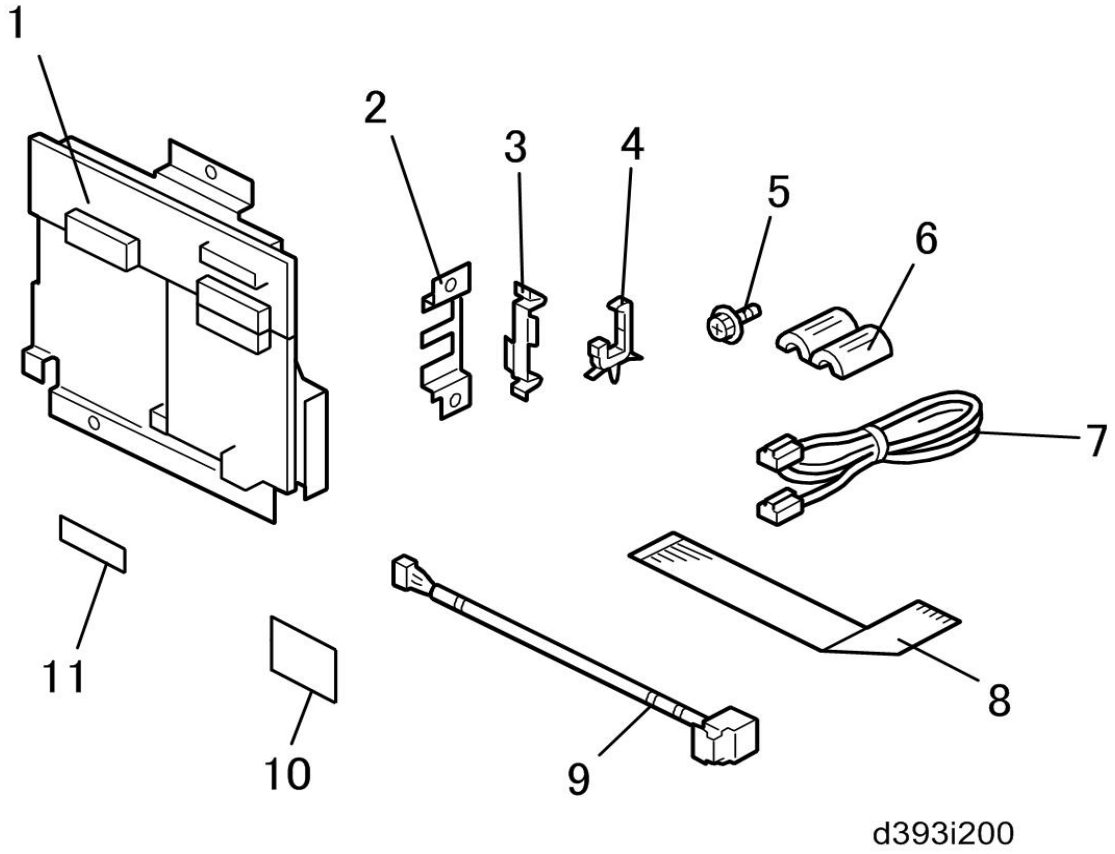

WWW.SERVICE-MANUAL.NET

1.3.2 INSTALLATION PROCEDURE

CAUTION

- **Before installing this optional unit:**
- Print out all data in the printer buffer.
- Turn off the main switch and disconnect the power cord and the network cable.

You can add two more SG3 boards to this model. Follow the procedures for adding the single SG3 board installation or double SG3 boards installation as a customer needs.

For Installing the single G3 Board

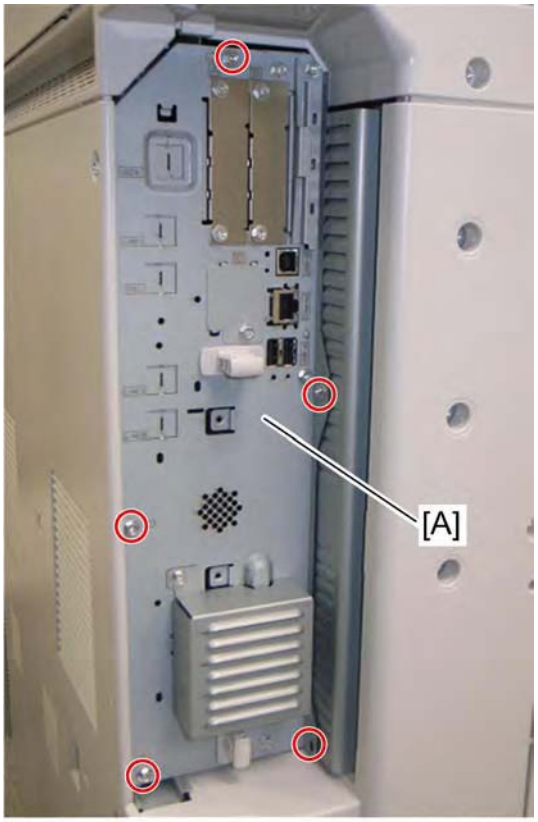

D393i075

1. Remove the controller box [A] (🔩 x 5).

WWW.SERVICE-MANUAL.NET

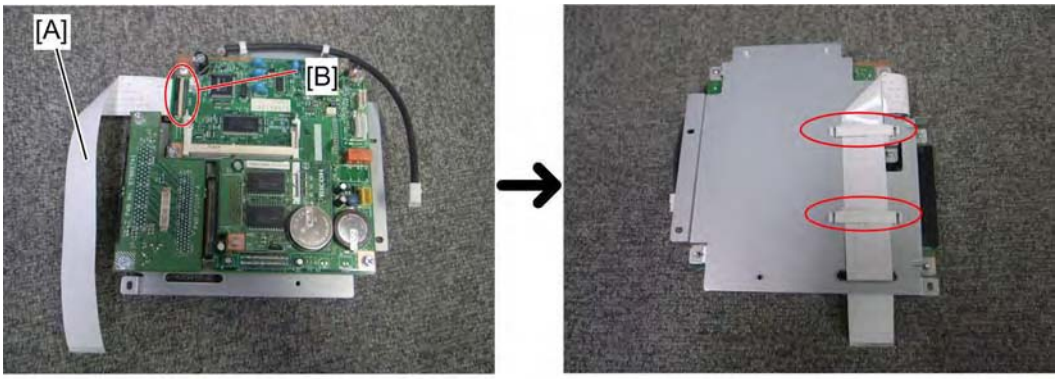

d393i011 d393i012

2. Attach one end (short length) of the flat cable [A] to the connector [B] of the FCU board.
3. Hold the flat cable with two clamps and pass the other end of the flat cable through the cutout as shown above.

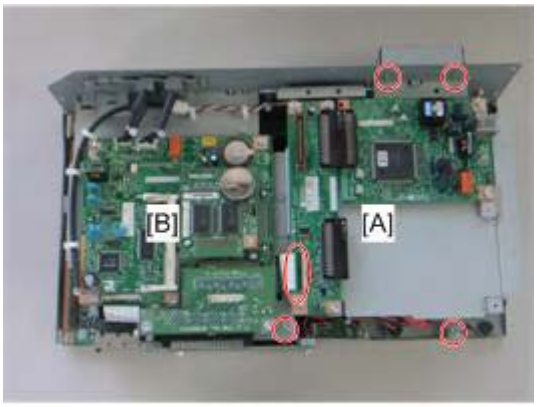

d393i081

4. Connect the SG3 interface unit [A] to the controller board [B] with the flat cable (☞ x 4).

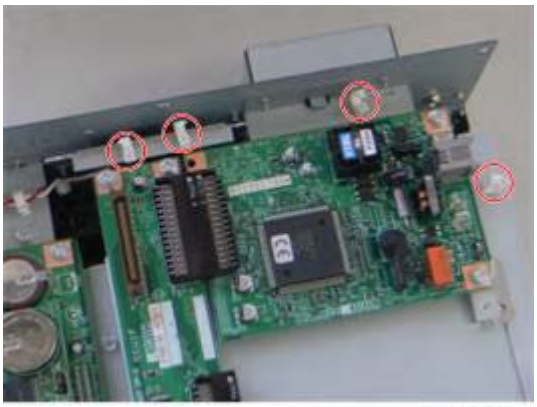

d393i048

5. Attach four clamps to the brackets.

WWW.SERVICE-MANUAL.NET

G3 Interface Unit (D393)

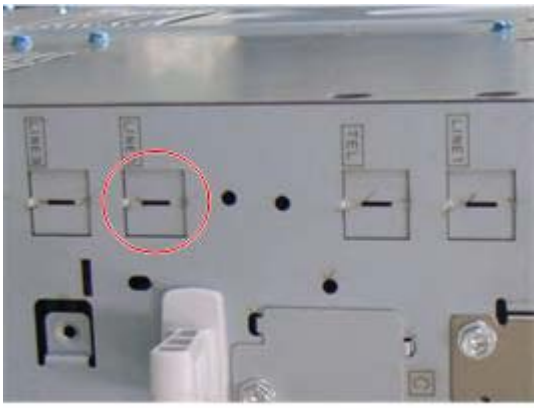

d393i088C

6. Remove the "LINE2" cover with a screwdriver.

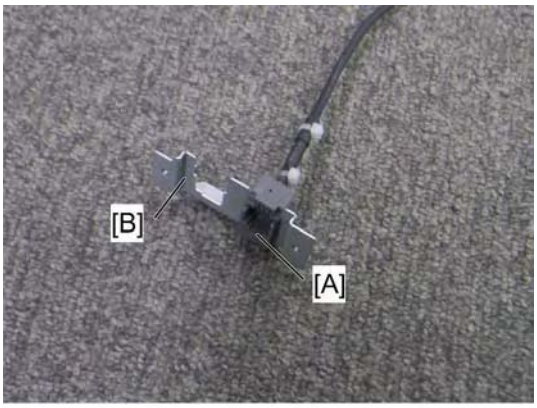

d393i047

7. Attach the socket of harness [A] (LINE2) to the modular bracket [B] for SG3.

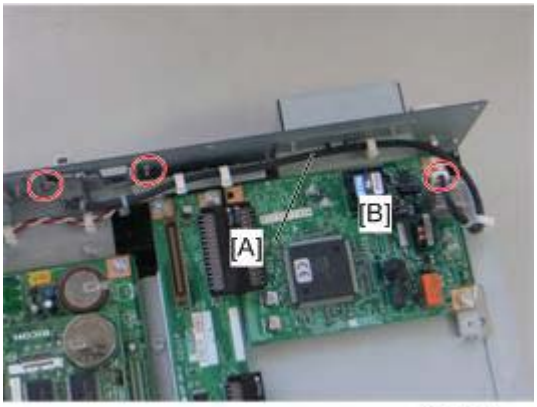

d393i091

8. Connect the harness [A] to the SG3 interface unit [B] (x 4).
9. Attach the modular bracket for SG3 to the controller box (x 2).
10. Reinstall the controller box.

WWW.SERVICE-MANUAL.NET

For Installing the Double G3 Boards

d393i090

1. Remove one of SG3 boards from the SG3 interface units and then attach the SG3 board to the other SG3 interface unit (🔩 x 2).
2. Remove the controller box.

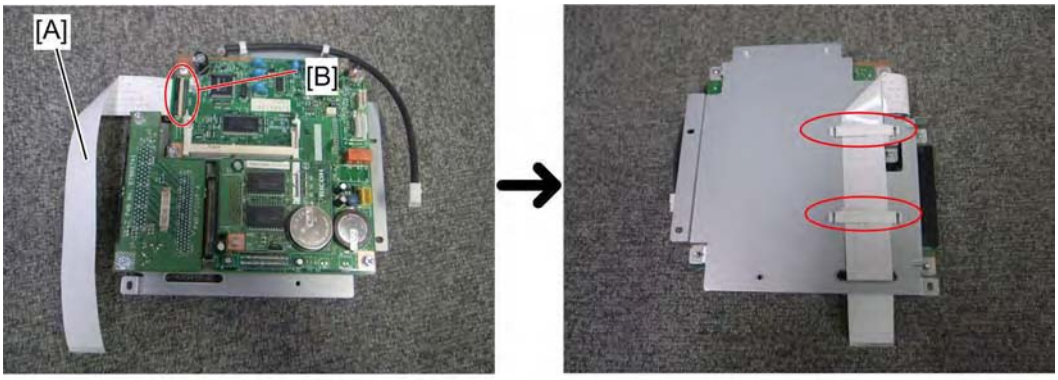

d393i011 d393i012

3. Attach one end (short length) of the flat cable [A] to the connector [B] of the FCU board.
4. Hold the flat cable with two clamps and pass the other end of the flat cable through the cutout as shown above.

WWW.SERVICE-MANUAL.NET

G3 Interface Unit (D393)

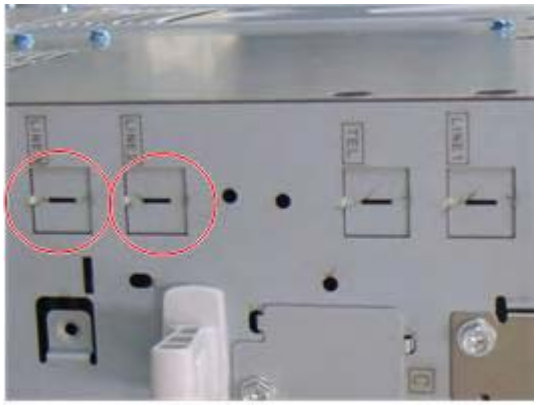

d393i088D

5. Remove the "LINE2" cover and "LINE3" cover with a screwdriver.

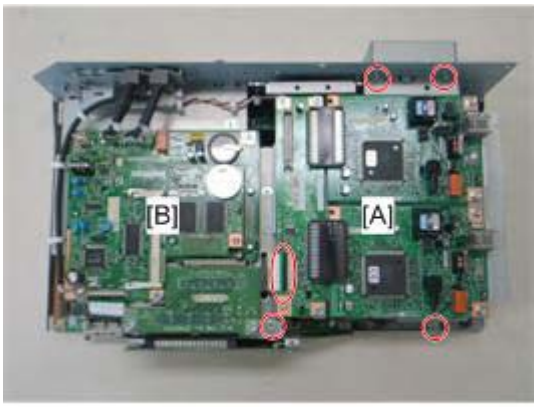

d393i081

6. Connect the SG3 interface unit [A] to the controller board [B] with the flat cable (🔩 x 4).

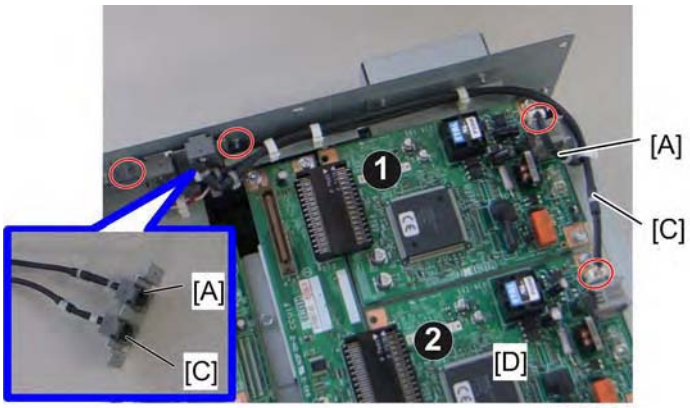

d393i092

7. Attach the socket of harness [A] (LINE2) and the socket of harness [C] (LINE3) to the modular bracket for SG3.
8. Connect the harness [A] (LINE2) to the first SG3 board ❶ and the harness [C] (LINE3) to the second SG3 board ❷ (🔧 x 4).
9. Attach the modular bracket for SG3 to the controller box (🔩 x 2).

WWW.SERVICE-MANUAL.NET

10. Reinstall the controller box.
11. Attach the ferrite core to the telephone cord for single SG3 board installation, or the two ferrite cores to the telephone cords for double-SG3 board installation.
12. Connect the telephone cord to the "LINE 2" jack for single SG3 board installation, or connect the telephone cords to the "LINE2" and "LINE3" jacks for double-SG3 board installation.
13. Connect the power plug to a power outlet and turn on the main power switch.
14. Enter the service mode. Set bit 1 of communication switch 16 to "1" (SP1-104-023).
15. Set bit 3 of communication switch 16 to "1" (SP1-104-023) if you have installed two SG3 boards.
16. Exit the service mode.
17. Turn the main power switch off and on.
18. Print out the system parameter list. Then check that "G3" shows as an option.
19. Set up and program the items required for PSTN-2 communications.

WWW.SERVICE-MANUAL.NET

2. REPLACEMENT AND ADJUSTMENT

2.1 FCU

1. When you replace the FCU board, remove the MBU board from the old FCU board and install it on the new FCU board.
2. Set the correct date and time with the User Tools: User Tools > System Settings > Timer Setting > Set Date/Time.

Note

- Do not turn off the battery switch (SW1).
- Do SP6101 to print the system parameters, and check the settings.

WWW.SERVICE-MANUAL.NET

3. TROUBLESHOOTING

3.1 ERROR CODES

If an error code occurs, retry the communication. If the same problem occurs, try to fix the problem as suggested below. Note that some error codes appear only in the error code display and on the service report.

Code	Meaning	Suggested Cause/Action
0-00	DIS/NSF not detected within 40 s of Start being pressed	▪ Check the line connection. ▪ The machine at the other end may be incompatible. ▪ Replace the FCU. ▪ Check for DIS/NSF with an oscilloscope. ▪ If the rx signal is weak, there may be a bad line.
0-01	DCN received unexpectedly	▪ The other party is out of paper or has a jammed printer. ▪ The other party pressed Stop during communication.
0-03	Incompatible modem at the other end	The other terminal is incompatible.
0-04	CFR or FTT not received after modem training	▪ Check the line connection. ▪ Try changing the tx level and/or cable equalizer settings. ▪ Replace the FCU. ▪ The other terminal may be faulty; try sending to another machine. ▪ If the rx signal is weak or defective, there may be a bad line. **Cross reference** Tx level - NCU Parameter 01 (PSTN)

WWW.SERVICE-MANUAL.NET

Error Codes

Code	Meaning	Suggested Cause/Action
		Cable equalizer - G3 Switch 07 (PSTN) Dedicated Tx parameters in Service Program Mode
0-05	Modem training fails even G3 shifts down to 2400 bps.	▪ Check the line connection. ▪ Try adjusting the tx level and/or cable equalizer. ▪ Replace the FCU. ▪ Check for line problems. **Cross reference** See error code 0-04.
0-06	The other terminal did not reply to DCS	▪ Check the line connection. ▪ Try adjusting the tx level and/or cable equalizer settings. ▪ Replace the FCU. ▪ The other end may be defective or incompatible; try sending to another machine. ▪ Check for line problems. **Cross reference** See error code 0-04.
0-07	No post-message response from the other end after a page was sent	▪ Check the line connection. ▪ Replace the FCU. ▪ The other end may have jammed or run out of paper. ▪ The other end user may have disconnected the call. ▪ Check for a bad line. ▪ The other end may be defective; try sending to another machine.
0-08	The other end sent RTN or PIN after receiving a page, because there were too many errors	▪ Check the line connection. ▪ Replace the FCU. ▪ The other end may have jammed, or run out of paper or memory space.

WWW.SERVICE-MANUAL.NET

Code	Meaning	Suggested Cause/Action
		▪ Try adjusting the tx level and/or cable equalizer settings. ▪ The other end may have a defective modem/FCU; try sending to another machine. ▪ Check for line problems and noise. **Cross reference** ▪ Tx level - NCU Parameter 01 (PSTN) ▪ Cable equalizer - G3 Switch 07 (PSTN) ▪ Dedicated Tx parameters in Service Program Mode
0-14	Non-standard post message response code received	▪ Incompatible or defective remote terminal; try sending to another machine. ▪ Noisy line: resend. ▪ Try adjusting the tx level and/or cable equalizer settings. ▪ Replace the FCU. **Cross reference** See error code 0-08.
0-15	The other terminal is not capable of specific functions.	The other terminal is not capable of accepting the following functions, or the other terminal's memory is full. ▪ Confidential rx ▪ Transfer function ▪ SEP/SUB/PWD/SID
0-16	CFR or FTT not detected after modem training in confidential or transfer mode	▪ Check the line connection. ▪ Replace the FCU. ▪ Try adjusting the tx level and/or cable equalizer settings. ▪ The other end may have disconnected, or it may be defective; try calling another machine. ▪ If the rx signal level is too low, there may be a line problem.

WWW.SERVICE-MANUAL.NET

Error Codes

Code	Meaning	Suggested Cause/Action
		Cross reference See error code 0-08.
0-20	Facsimile data not received within 6 s of retraining	▪ Check the line connection. ▪ Replace the FCU. ▪ Check for line problems. ▪ Try calling another fax machine. ▪ Try adjusting the reconstruction time for the first line and/or rx cable equalizer setting. **Cross reference** Reconstruction time - G3 Switch 0A, bit 6 Rx cable equalizer - G3 Switch 07 (PSTN)
0-21	EOL signal (end-of-line) from the other end not received within 5 s of the previous EOL signal	▪ Check the connections between the FCU and line. ▪ Check for line noise or other line problems. ▪ Replace the FCU. ▪ The remote machine may be defective or may have disconnected. **Cross reference** Maximum interval between EOLs and between ECM frames - G3 Bit Switch 0A, bit 4
0-22	The signal from the other end was interrupted for more than the acceptable modem carrier drop time (default: 200 ms)	▪ Check the line connection. ▪ Replace the FCU. ▪ Defective remote terminal. ▪ Check for line noise or other line problems. ▪ Try adjusting the acceptable modem carrier drop time. **Cross reference** Acceptable modem carrier drop time - G3 Switch 0A, bits 0 and 1
0-23	Too many errors during reception	▪ Check the line connection. ▪ Replace the FCU. ▪ Defective remote terminal

WWW.SERVICE-MANUAL.NET

Code	Meaning	Suggested Cause/Action
		▪ Check for line noise or other line problems. ▪ Try asking the other end to adjust their tx level. ▪ Try adjusting the rx cable equalizer setting and/or rx error criteria. **Cross reference** Rx cable equalizer - G3 Switch 07 (PSTN) Rx error criteria - Communication Switch 02, bits 0 and 1
0-30	The other terminal did not reply to NSS(A) in AI short protocol mode	▪ Check the line connection. ▪ Try adjusting the tx level and/or cable equalizer settings. ▪ The other terminal may not be compatible. **Cross reference** Dedicated tx parameters - Section 4
0-32	The other terminal sent a DCS, which contained functions that the receiving machine cannot handle.	▪ Check the protocol dump list. ▪ Ask the other party to contact the manufacturer.
0-33	The data reception (not ECM) is not completed within 10 minutes.	▪ Check the line connection. ▪ The other terminal may have a defective modem/FCU.
0-52	Polarity changed during communication	▪ Check the line connection. Retry communication.
0-55	FCU does not detect the SG3.	▪ FCU firmware or board defective. ▪ SG3 firmware or board defective.
0-56	The stored message data exceeds the capacity of the mailbox in the SG3.	▪ SG3 firmware or board defective.
0-70	The communication mode specified in CM/JM was	▪ The other terminal did not have a compatible communication mode (e.g., the other terminal

WWW.SERVICE-MANUAL.NET

Error Codes

Code	Meaning	Suggested Cause/Action
	not available (V.8 calling and called terminal)	was a V.34 data modem and not a fax modem.) ▪ A polling tx file was not ready at the other terminal when polling rx was initiated from the calling terminal.
0-74	The calling terminal fell back to T.30 mode, because it could not detect ANSam after sending CI.	▪ The calling terminal could not detect ANSam due to noise, etc. ▪ ANSam was too short to detect. ▪ Check the line connection and condition. ▪ Try making a call to another V.8/V.34 fax.
0-75	The called terminal fell back to T.30 mode, because it could not detect a CM in response to ANSam (ANSam timeout).	▪ The terminal could not detect ANSam. ▪ Check the line connection and condition. ▪ Try receiving a call from another V.8/V.34 fax.
0-76	The calling terminal fell back to T.30 mode, because it could not detect a JM in response to CM (CM timeout).	▪ The called terminal could not detect a CM due to noise, etc. ▪ Check the line connection and condition. ▪ Try making a call to another V.8/V.34 fax.
0-77	The called terminal fell back to T.30 mode, because it could not detect a CJ in response to JM (JM timeout).	▪ The calling terminal could not detect a JM due to noise, etc. ▪ A network that has narrow bandwidth cannot pass JM to the other end. ▪ Check the line connection and condition. ▪ Try receiving a call from another V.8/V.34 fax.
0-79	The called terminal detected CI while waiting for a V.21 signal.	▪ Check for line noise or other line problems. ▪ If this error occurs, the called terminal falls back to T.30 mode.
0-80	The line was disconnected due to a timeout in V.34	▪ The guard timer expired while starting these phases. Serious noise, narrow bandwidth, or

WWW.SERVICE-MANUAL.NET

Code	Meaning	Suggested Cause/Action
	phase 2 – line probing.	low signal level can cause these errors. If these errors happen at the transmitting terminal: ▪ Try making a call at a later time. ▪ Try using V.17 or a slower modem using dedicated tx parameters. ▪ Try increasing the tx level. ▪ Try adjusting the tx cable equalizer setting. If these errors happen at the receiving terminal: ▪ Try adjusting the rx cable equalizer setting. ▪ Try increasing the tx level. ▪ Try using V.17 or a slower modem if the same error is frequent when receiving from multiple senders.
0-81	The line was disconnected due to a timeout in V.34 phase 3 – equalizer training.	
0-82	The line was disconnected due to a timeout in the V.34 phase 4 – control channel start-up.	
0-83	The line was disconnected due to a timeout in the V.34 control channel restart sequence.	
0-84	The line was disconnected due to abnormal signaling in V.34 phase 4 – control channel start-up.	▪ The signal did not stop within 10 s. ▪ Turn off the machine, then turn it back on. ▪ If the same error is frequent, replace the FCU.
0-85	The line was disconnected due to abnormal signaling in V.34 control channel restart.	▪ The signal did not stop within 10 s. ▪ Turn off the machine, then turn it back on. ▪ If the same error is frequent, replace the FCU.
0-86	The line was disconnected because the other terminal requested a data rate using MPh that was not available in the currently selected symbol rate.	▪ The other terminal was incompatible. ▪ Ask the other party to contact the manufacturer.
0-87	The control channel started after an unsuccessful primary channel.	▪ The receiving terminal restarted the control channel because data reception in the primary channel was not successful.

WWW.SERVICE-MANUAL.NET

Error Codes

Code	Meaning	Suggested Cause/Action
		▪ This does not result in an error communication.
0-88	The line was disconnected because PPR was transmitted/received 9 (default) times within the same ECM frame.	▪ Try using a lower data rate at the start. ▪ Try adjusting the cable equalizer setting.
2-11	Only one V.21 connection flag was received	▪ Replace the FCU.
2-12	Modem clock irregularity	▪ Replace the FCU.
2-13	Modem initialization error	▪ Turn off the machine, then turn it back on. ▪ Update the modem ROM. ▪ Replace the FCU.
2-23	JBIG compression or reconstruction error	▪ Turn off the machine, then turn it back on.
2-24	JBIG ASIC error	▪ Turn off the machine, then turn it back on.
2-25	JBIG data reconstruction error (BIH error)	▪ JBIG data error ▪ Check the sender's JBIG function. ▪ Update the MBU ROM.
2-26	JBIG data reconstruction error (Float marker error)	
2-27	JBIG data reconstruction error (End marker error)	
2-28	JBIG data reconstruction error (Timeout)	
2-29	JBIG trailing edge maker error	▪ FCU defective ▪ Check the destination device.
2-50	The machine resets itself for a fatal FCU system	▪ If this is frequent, update the ROM, or replace the FCU.

WWW.SERVICE-MANUAL.NET

Code	Meaning	Suggested Cause/Action
	error	
2-51	The machine resets itself because of a fatal communication error	▪ If this is frequent, update the ROM, or replace the FCU.
2-53	Snd msg() in the manual task is an error because the mailbox for the operation task is full.	▪ The user did the same operation many times, and this gave too much load to the machine.
4-01	Line current was cut	▪ Check the line connector. ▪ Check for line problems. ▪ Replace the FCU.
4-10	Communication failed because of an ID Code mismatch (Closed Network) or Tel. No./CSI mismatch (Protection against Wrong Connections)	▪ Get the ID Codes the same and/or the CSIs programmed correctly, then resend. ▪ The machine at the other end may be defective.
5-10	DCR timer expired	▪ Replace the FCU.
5-20	Storage impossible because of a lack of memory	▪ Temporary memory shortage. ▪ Test the SAF memory.
5-21	Memory overflow	
5-23	Print data error when printing a substitute rx or confidential rx message	▪ Test the SAF memory. ▪ Ask the other end to resend the message.
5-25	SAF file access error	▪ Replace an SD card or HDD. ▪ Replace the FCU.
6-00	G3 ECM - T1 time out	▪ Try adjusting the rx cable equalizer.

WWW.SERVICE-MANUAL.NET

Error Codes

Code	Meaning	Suggested Cause/Action
	during reception of facsimile data	▪ Replace the FCU.
6-01	G3 ECM - no V.21 signal was received	
6-02	G3 ECM - EOR was received	
6-04	G3 ECM - RTC not detected	▪ Check the line connection. ▪ Check for a bad line or defective remote terminal. ▪ Replace the FCU.
6-05	G3 ECM - facsimile data frame not received within 18 s of CFR, but there was no line fail	▪ Check the line connection. ▪ Check for a bad line or defective remote terminal. ▪ Replace the FCU. ▪ Try adjusting the rx cable equalizer **Cross reference** ▪ Rx cable equalizer - G3 Switch 07 (PSTN)
6-06	G3 ECM - coding/decoding error	▪ Defective FCU. ▪ The other terminal may be defective.
6-08	G3 ECM - PIP/PIN received in reply to PPS.NULL	▪ The other end pressed Stop during communication. ▪ The other terminal may be defective.
6-09	G3 ECM - ERR received	▪ Check for a noisy line. ▪ Adjust the tx levels of the communicating machines. ▪ See code 6-05.
6-10	G3 ECM - error frames still received at the other end after all communication attempts at 2400 bps	▪ Check for line noise. ▪ Adjust the tx level (use NCU parameter 01 or the dedicated tx parameter for that address). ▪ Check the line connection.

WWW.SERVICE-MANUAL.NET

Code	Meaning	Suggested Cause/Action
		▪ Defective remote terminal.
6-21	V.21 flag detected during high speed modem communication	▪ The other terminal may be defective or incompatible.
6-22	The machine resets the sequence because of an abnormal handshake in the V.34 control channel	▪ Check for line noise. ▪ If the same error occurs frequently, replace the FCU. ▪ Defective remote terminal.
6-99	V.21 signal not stopped within 6 s	▪ Replace the FCU.
13-17	SIP user name registration error	▪ Double registration of the SIP user name. ▪ Capacity for user-name registration in the SIP server is not sufficient.
13-18	SIP server access error	▪ Incorrect initial setting for the SIP server. ▪ Defective SIP server.
13-24	SIP authentication error	▪ Registered password in the device does not match the password in the SIP server.
13-25	Network I/F setting error	▪ IPV4 is not active in the active protocol setting. ▪ IP address of the device is not registered.
13-26	Network I/F setting error at power on	▪ Active protocol setting does not match the I/F setting for SIP server. ▪ IP address of the device is not registered.
13-27	IP address setting error	▪ IP address of the device is not registered.
14-00	SMTP Send Error	▪ Error occurred during sending to the SMTP server. Occurs for any error other than 14-01 to 16. For example, the mail address of the system administrator is not registered.
14-01	SMTP Connection Failed	▪ Failed to connect to the SMTP server (timeout)

WWW.SERVICE-MANUAL.NET

Error Codes

Code	Meaning	Suggested Cause/Action
		because the server could not be found. ▪ The PC is not ready to transfer files. ▪ SMTP server not functioning correctly. ▪ The DNS IP address is not registered. ▪ Network not operating correctly. ▪ Destination folder selection not correct.
14-02	No Service by SMTP Service (421)	▪ SMTP server operating incorrectly, or the destination for direct SMTP sending is not correct. ▪ Contact the system administrator and check that the SMTP server has the correct settings and operates correctly. ▪ Contact the system administrator for direct SMTP sending and check the sending destination.
14-03	Access to SMTP Server Denied (450)	▪ Failed to access the SMTP server because the access is denied. ▪ SMTP server operating incorrectly. Contact the system administrator to determine if there is a problem with the SMTP server and to check that the SMTP server settings are correct. ▪ Folder send destination is incorrect. Contact the system administrator to determine that the SMTP server settings and path to the server are correct. ▪ Device settings incorrect. Confirm that the user name and password settings are correct. ▪ Direct SMTP destination incorrect. Contact the system administrator to determine if there is a problem at the destination at that the settings at the destination are correct.

WWW.SERVICE-MANUAL.NET

Code	Meaning	Suggested Cause/Action
14-04	Access to SMTP Server Denied (550)	▪ SMTP server operating incorrectly ▪ Direct SMTP sending not operating correctly
14-05	SMTP Server HDD Full (452)	▪ Failed to access the SMTP server because the HDD on the server is full. ▪ Insufficient free space on the HDD of the SMTP server. Contact the system administrator and check the amount of space remaining on the SMTP server HDD. ▪ Insufficient free space on the HDD where the destination folder is located. Contact the system administrator and check the amount of space remaining on the HDD where the target folder is located. ▪ Insufficient free space on the HDD at the target destination for SMTP direct sending. Contact the system administrator and check the amount of space remaining on the target HDD.
14-06	User Not Found on SMTP Server (551)	▪ The designated user does not exist. ▪ The designated user does not exist on the SMTP server. ▪ The designated address is not for use with direct SMTP sending.
14-07	Data Send to SMTP Server Failed (4XX)	▪ Failed to access the SMTP server because the transmission failed. ▪ PC not operating correctly. ▪ SMTP server operating incorrectly ▪ Network not operating correctly. ▪ Destination folder setting incorrect. ▪ Direct SMTP sending not operating correctly.
14-08	Data Send to SMTP Server Failed (5XX)	▪ Failed to access the SMTP server because the transmission failed.

WWW.SERVICE-MANUAL.NET

Error Codes

Code	Meaning	Suggested Cause/Action
		▪ SMTP server operating incorrectly ▪ Destination folder setting incorrect. ▪ Direct SMTP sending not operating correctly. ▪ Software application error.
14-09	Authorization Failed for Sending to SMTP Server	▪ POP-Before-SMTP or SMTP authorization failed. ▪ Incorrect setting for file transfer
14-10	Addresses Exceeded	▪ Number of broadcast addresses exceeded the limit for the SMTP server.
14-11	Buffer Full	▪ The send buffer is full so the transmission could not be completed. Buffer is full due to using Scan-to-Email while the buffer is being used send mail at the same time.
14-12	Data Size Too Large	▪ Transmission was cancelled because the detected size of the file was too large.
14-13	Send Cancelled	▪ Processing is interrupted because the user pressed Stop.
14-14	Security Locked File Error	▪ Update the software because of the defective software.
14-15	Mail Data Error	▪ The transmitting a mail is interrupted via DCS due to the incorrect data. ▪ Update the software because of the defective software.
14-16	Maximum Division Number Error	▪ When a mail is divided for the mail transmission and the division number of a mail are more than the specified number, the mail transmission is interrupted. ▪ Update the software because of the defective software.

WWW.SERVICE-MANUAL.NET

Code	Meaning	Suggested Cause/Action
14-17	Incorrect Ticket	▪ Update the software because of the defective software.
14-18	Access to MCS File Error	▪ The access to MCS file is denied due to the no permission of access. ▪ Update the software because of the defective software.
14-30	MCS File Creation Failed	Failed to create the MCS file because: ▪ The number of files created with other applications on the Document Server has exceeded the limit. ▪ HDD is full or not operating correctly. ▪ Software error.
14-31	UFS File Creation Failed	UFS file could not be created: ▪ Not enough space in UFS area to handle both Scan-to-Email and IFAX transmission. ▪ HDD full or not operating correctly. ▪ Software error.
14-32	Cancelled the Mail Due to Error Detected by NFAX	▪ Error detected with NFAX and send was cancelled due to a software error.
14-33	No Mail Address For the Machine	▪ Neither the mail address of the machine nor the mail address of the network administrator is registered.
14-34	Address designated in the domain for SMTP sending does not exist	▪ Operational error in normal mail sending or direct SMTP sending. ▪ Check the address selected in the address book for SMTP sending. ▪ Check the domain selection.
14-50	Mail Job Task Error	Due to an FCU mail job task error, the send was cancelled: ▪ Address book was being edited during

WWW.SERVICE-MANUAL.NET

Error Codes

Code	Meaning	Suggested Cause/Action
		creation of the notification mail. ▪ Software error.
14-51	UCS Destination Download Error	Not even one return notification can be downloaded: ▪ The address book was being edited. ▪ The number for the specified destination does not exist (it was deleted or edited after the job was created).
14-60	Send Cancel Failed	▪ The cancel operation by the user failed to cancel the send operation.
14-61	Notification Mail Send Failed for All Destinations	▪ All addresses for return notification mail failed.
14-62	Transmission Error due to the existence of zero line page	▪ When the 0 line page exists in received pages with G3 communication, the transmission is interrupted.
15-01	POP3/IMAP4 Server Not Registered	▪ At startup, the system detected that the IP address of the POP3/IMAP4 server has not been registered in the machine.
15-02	POP3/IMAP4 Mail Account Information Not Registered	▪ The POP3/IMAP4 mail account has not been registered.
15-03	Mail Address Not Registered	▪ The mail address has not been registered.
15-10	DCS Mail Receive Error	▪ Error other than 15-11 to 15-18.
15-11	Connection Error	The DNS or POP3/IMAP4 server could not be found: ▪ The IP address for DNS or POP3/IMAP4 server is not stored in the machine. ▪ The DNS IP address is not registered. ▪ Network not operating correctly.

WWW.SERVICE-MANUAL.NET

Code	Meaning	Suggested Cause/Action
15-12	Authorization Error	POP3/IMAP4 send authorization failed: ▪ Incorrect IFAX user name or password. ▪ Access was attempted by another device, such as the PC. ▪ POP3/IMAP4 settings incorrect.
15-13	Receive Buffer Full	▪ Occurs only during manual reception. Transmission cannot be received due to insufficient buffer space. The buffer is being used for mail send or Scan-to-Email.
15-14	Mail Header Format Error	▪ The mail header is not standard format. For example, the Date line description is incorrect.
15-15	Mail Divide Error	▪ The e-mail is not in standard format. There is no boundary between parts of the e-mail, including the header.
15-16	Mail Size Receive Error	▪ The mail cannot be received because it is too large.
15-17	Receive Timeout	▪ May occur during manual receiving only because the network is not operating correctly.
15-18	Incomplete Mail Received	▪ Only one portion of the mail was received.
15-31	Final Destination for Transfer Request Reception Format Error	▪ The format of the final destination for the transfer request was incorrect.
15-39	Send/Delivery Destination Error	The transmission cannot be delivered to the final destination: ▪ Destination file format is incorrect. ▪ Could not create the destination for the file transmission.
15-41	SMTP Receive Error	▪ Reception rejected because the transaction exceeded the limit for the “Auth. E-mail RX”

WWW.SERVICE-MANUAL.NET

Error Codes

Code	Meaning	Suggested Cause/Action
		setting.
15-42	Off Ramp Gateway Error	▪ The delivery destination address was specified with Off Ramp Gateway OFF.
15-43	Address Format Error	▪ Format error in the address of the Off Ramp Gateway.
15-44	Addresses Over	▪ The number of addresses for the Off Ramp Gateway exceeded the limit of 30.
15-61	Attachment File Format Error	▪ The attached file is not TIFF format.
15-62	TIFF File Compatibility Error	Could not receive transmission due to: ▪ Resolution error ▪ Image of resolution greater than 200 dpi without extended memory. ▪ Resolution is not supported. ▪ Page size error ▪ The page size was larger than A3. ▪ Compression error ▪ File was compressed with other than MH, MR, or MMR.
15-63	TIFF Parameter Error	The TIFF file sent as the attachment could not be received because the TIFF header is incorrect: ▪ The TIFF file attachment is a type not supported. ▪ The TIFF file attachment is corrupted. ▪ Software error.
15-64	TIFF Decompression Error	The file received as an attachment caused the TIFF decompression error: ▪ The TIFF format of the attachment is corrupted. ▪ Software error.

WWW.SERVICE-MANUAL.NET

Code	Meaning	Suggested Cause/Action
15-71	Not Binary Image Data	▪ The file could not be received because the attachment was not binary image data.
15-73	MDN Status Error	▪ Could not find the Disposition line in the header of the Return Receipt, or there is a problem with the firmware.
15-74	MDN Message ID Error	▪ Could not find the Original Message ID line in the header of the Return Receipt, or there is a problem with the firmware.
15-80	Mail Job Task Read Error	▪ Could not receive the transmission because the destination buffer is full and the destination could not be created (this error may occur when receiving a transfer request or a request for notification of reception).
15-81	Repeated Destination Registration Error	▪ Could not repeat receive the transmission because the destination buffer is full and the destination could not be created (this error may occur when receiving a transfer request or a request for notification of reception).
15-91	Send Registration Error	Could not receive the file for transfer to the final destination: ▪ The format of the final destination or the transfer destination is incorrect. ▪ Destinations are full so the final and transfer destinations could not be created.
15-92	Memory Overflow	▪ Transmission could not be received because memory overflowed during the transaction.
15-93	Memory Access Error	▪ Transaction could not complete due to a malfunction of SAF memory.
15-94	Incorrect ID Code	▪ The machine rejected an incoming e-mail for transfer request, because the ID code in the

WWW.SERVICE-MANUAL.NET

Error Codes

Code	Meaning	Suggested Cause/Action
		incoming e-mail did not match the ID code registered in the machine.
15-95	Transfer Station Function	▪ The machine rejected an incoming e-mail for transfer because the transfer function was unavailable.
22-00	Original length exceeded the maximum scan length	▪ Divide the original into more than one page. ▪ Check the resolution used for scanning. Lower the scan resolution if possible. ▪ Add optional page memory.
22-01	Memory overflow while receiving	▪ Wait for the files in the queue to be sent. ▪ Delete unnecessary files from memory. ▪ Transfer the substitute reception files to an another fax machine, if the machine's printer is busy or out of order. ▪ Add an optional SAF memory card or hard disk.
22-02	Tx or rx job stalled due to line disconnection at the other end	▪ The job started normally but did not finish normally; data may or may not have been received fully. ▪ Restart the machine.
22-04	The machine cannot store received data in the SAF	▪ Update the ROM ▪ Replace the FCU.
22-05	No G3 parameter confirmation answer	▪ Defective FCU board or firmware.
23-00	Data read timeout during construction	▪ Restart the machine. ▪ Replace the FCU.
25-00	The machine software resets itself after a fatal transmission error occurred	▪ Update the ROM ▪ Replace the FCU.

WWW.SERVICE-MANUAL.NET

Code	Meaning	Suggested Cause/Action
F0-xx	V.34 modem error	▪ Replace the FCU.
F6-xx	SG3 modem error	▪ Update the SG3 modem ROM. ▪ Replace the SG3 board. ▪ Check for line noise or other line problems. ▪ Try communicating another V.8/V.34 fax.

WWW.SERVICE-MANUAL.NET

3.2 IFAX TROUBLESHOOTING

Use the following procedures to determine whether the machine or another part of the network is causing the problem.

Communication Route	Item	Action [Remarks]
General LAN	1. Connection with the LAN	▪ Check that the LAN cable is connected to the machine. ▪ Check that the LEDs on the hub are lit.
	2. LAN activity	Check that other devices connected to the LAN can communicate through the LAN.
Between IFAX and PC	1. Network settings on the PC	▪ Check the network settings on the PC. [Is the IP address registered in the TCP/IP properties in the network setup correct? Check the IP address with the administrator of the network.]
	2. Check that PC can connect with the machine	▪ Use the “ping” command on the PC to contact the machine. [At the MS-DOS prompt, type ping then the IP address of the machine, then press Enter.]
	3. LAN settings in the machine	▪ Check the LAN parameters ▪ Check if there is an IP address conflict with other PCs. [Use the “Network” function in the User Tools. If there is an IP address conflict, inform the administrator.]
Between machine and e-mail server	1. LAN settings in the machine	▪ Check the LAN parameters ▪ Check if there is an IP address conflict with other PCs. [Use the “Network” function in the User Tools.

WWW.SERVICE-MANUAL.NET

Communication Route	Item	Action [Remarks]
		If there is an IP address conflict, inform the administrator.]
	2. E-mail account on the server	▪ Make sure that the machine can log into the e-mail server. ▪ Check that the account and password stored in the server are the same as in the machine. [Ask the administrator to check.]
	3. E-mail server	▪ Make sure that the client devices which have an account in the server can send/receive e-mail. [Ask the administrator to check. Send a test e-mail with the machine's own number as the destination. The machine receives the returned e-mail if the communication is performed successfully.]
Between e-mail server and internet	1. E-mail account on the Server	▪ Make sure that the PC can log into the e-mail server. ▪ Check that the account and password stored in the server are the same as in the machine. [Ask the administrator to check.]
	2. E-mail server	▪ Make sure that the client devices which have an account in the server can send/receive e-mail. [Ask the administrator to check. Send a test e-mail with the machine's own number as the destination. The machine receives the returned e-mail if the communication is performed successfully.]

WWW.SERVICE-MANUAL.NET

IFAX Troubleshooting

Communication Route	Item	Action [Remarks]
	3. Destination e-mail address	▪ Make sure that the e-mail address is actually used. ▪ Check that the e-mail address contains no incorrect characters such as spaces.
	4. Router settings	▪ Use the “ping” command to contact the router. ▪ Check that other devices connected to the router can sent data over the router. [Ask the administrator of the server to check.]
	5. Error message by e-mail from the network of the destination.	▪ Check whether e-mail can be sent to another address on the same network, using the application e-mail software. ▪ Check the error e-mail message. [Inform the administrator of the LAN.]

WWW.SERVICE-MANUAL.NET

3.3 IP-FAX TROUBLESHOOTING

3.3.1 IP-FAX TRANSMISSION

Cannot send by IP Address/Host Name

Check Point		Action
1	LAN cable connected?	Check the LAN cable connection.
2	Specified IP address/host name correct?	Check the IP address/host name.
3	Firewall/NAT is installed?	Cannot breach the firewall. Send by using another method (Fax, Internet Fax)
4	Transmission sent manually?	Manual sending not supported.
5	IP address of local machine registered?	Register the IP address.
6	Remote terminal port number setting other than 1720?	Send by specifying the port number.
7	Specified port number correct?	Confirm the port number of the remote fax.
8	DNS server registered when host name specified?	Contact the network administrator.
9	Remote fax a T.38 terminal?	Check whether the remote fax is a T38 terminal.
10	Remote fax switched off or busy?	Check that the remote fax is switched on.
11	Network bandwidth too narrow?	Request the network administrator to increase the bandwidth.
		Raise the delay level. IPFAX SW 01 Bit 0 to 3

WWW.SERVICE-MANUAL.NET

		IP-Fax bandwidth is the same as the DCS speed. Set IP-Fax SW00 Bit 6 to 1.
12	Remote fax cancelled transmission?	Check whether the remote fax cancelled the transmission.

Cannot send via VoIP Gateway

Check Point		Action
1	LAN cable connected?	Check the LAN cable connection.
2	VoIP Gateway T.38 standard?	Contact the network administrator.
3	VoIP Gateway installed correctly?	Contact the network administrator.
4	VoIP Gateway power switched on?	Contact the network administrator.
5	Is the IP address/host name of the specified Gateway correct?	Check the IP address/host name.
6	Number of the specified fax correct?	Check the remote fax number.
7	Firewall/NAT is installed?	Cannot breach the firewall. Send by using another method (Fax, Internet Fax)
8	Transmission sent manually?	Manual sending not supported.
9	IP address of local fax registered?	Register the IP address.
10	DNS registered when host name specified?	Contact the network administrator.
11	Remote fax a G3 fax?	Check that the remote fax is a G3 fax.
12	G3 fax is connected to VoIP gateway?	Check that G3 fax is connected.
13	Remote G3 fax turned on?	Check that G3 fax is switched on.

WWW.SERVICE-MANUAL.NET

14	Network bandwidth too narrow?	Request the network administrator to increase the bandwidth.
		Raise the network delay level. IPFAX SW 01 Bit 0 to 3
		IP-Fax bandwidth is the same as the DCS speed. Set IP-Fax SW00 Bit 6 to 1.

Cannot send by Alias Fax number.

Check Point		Action
1	LAN cable connected?	Check the LAN cable connection.
2	Number of specified Alias fax correct?	Confirm the Alias of the remote fax. Error Code: 13-14
3	Firewall/NAT installed?	Cannot breach the firewall. Send by using another method (Fax, Internet Fax)
4	Transmission sent manually?	Manual sending not supported.
5	Gatekeeper installed correctly?	Contact the network administrator.
6	Gatekeeper power switched on?	Contact the network administrator.
7	IP address/host name of Gatekeeper correct?	Check the IP address/host name.
8	DNS server registered when Gatekeeper host name specified?	Contact the network administrator.
9	Enable H.323 SW is set to on?	Check the settings. See User Parameter SW 34 Bit 0
10	IP address of local fax registered?	Register the IP address of the local fax.

WWW.SERVICE-MANUAL.NET

IP-Fax Troubleshooting

11	Alias number of local fax registered?	Register the Alias number of the local fax.
12	Remote fax registered in Gatekeeper?	Contact the network administrator.
13	Remote fax a T.38 terminal?	Check whether the remote fax is a T38 terminal.
14	Remote fax switched off or busy?	Contact the network administrator.
15	Network bandwidth too narrow?	Request the system administrator to increase the bandwidth.
		Raise the delay level. IPFAX SW 01 Bit 0 to 3
		Lower the modem transmission baud rate. IPFAX SW 05
16	Remote fax cancelled transmission?	Check whether the remote fax cancelled the transmission.

WWW.SERVICE-MANUAL.NET

3.3.2 IP-FAX RECEPTION

Cannot receive via IP Address/Host Name.

Check Point		Action
1	LAN cable connected?	Check the LAN cable connection.
2	Firewall/NAT is installed?	Cannot breach the firewall. Send by using another method (Fax, Internet Fax)
3	IP address of local fax registered?	Register the IP address.
4	Port number specified at remote sender fax (if required)?	Request the sender to specify the port number.
5	Specified port number correct (if required)?	Request the sender to check the port number.
6	DNS server registered when host name specified on sender side?	Contact the network administrator. Note ▪ The sender machine displays this error code if the sender fax is a Ricoh model.
7	Network bandwidth too narrow?	Request the system administrator to increase the bandwidth.
		Lower the start modem reception baud rate on the receiving side. IPFAX SW06
8	Remote fax cancelled transmission?	Check whether the remote fax cancelled the transmission.

Cannot receive by VoIP Gateway.

WWW.SERVICE-MANUAL.NET

IP-Fax Troubleshooting

Check Point		Action
1	LAN cable connected?	Check the LAN cable connection.
2	Firewall/NAT is installed?	Cannot breach the firewall. Request the remote fax to send by using another method (Fax, Internet Fax)
3	VoIP Gateway installed correctly?	Contact the network administrator.
4	VoIP Gateway power switched on?	Contact the network administrator.
5	IP address/host name of specified VoIP Gateway correct on sender's side?	Request the remote fax to check the IP address/host name.
6	DNS server registered when host name specified on sender side?	Contact the network administrator.
7	Network bandwidth too narrow?	Request the network administrator to increase the bandwidth.
8	G3 fax connected?	Check that G3 fax is connected.
9	G3 fax power switched on?	Check that G3 fax is switched on.

Cannot receive by Alias Fax number.

Check Point		Action
1	LAN cable connected?	Check the LAN cable connection.
2	Firewall/NAT is installed?	Cannot the breach firewall. Request the remote fax to send by using another method (Fax, Internet Fax)
3	Gatekeeper installed correctly?	Contact the network administrator. Note ▪ The sender machine displays this error code when the sender fax is a Ricoh model.

WWW.SERVICE-MANUAL.NET

4	Power to Gatekeeper switched on?	Contact the network administrator. Note ▪ The sender machine displays this error code when the sender fax is a Ricoh model.
5	IP address/host name of Gatekeeper correct on the sender's side?	Request the sender to check the IP address/host name. Note ▪ The sender machine displays this error code when the sender fax is a Ricoh model.
6	DNS server registered when Gatekeeper host name specified on sender's side?	Contact the network administrator. Note ▪ The sender machine displays this error code when the sender fax is a Ricoh model.
7	Enable H.323 SW is set to on?	Request the sender to check the settings. User Parameter SW 34 Bit 0 Note ▪ Only if the remote sender fax is a Ricoh fax.
8	Local fax IP address registered?	Register the IP address.
9	Local fax Alias number registered?	Register the Alias number.
10	Network bandwidth too narrow?	Request the system administrator to increase the bandwidth.
		Lower the start modem reception baud rate on the receiving side. IPFAX SW06
11	Remote fax cancelled transmission?	Check whether the remote fax cancelled the transmission.
12	Local fax registered in Gatekeeper?	Contact the network administrator.

WWW.SERVICE-MANUAL.NET

		Note ▪ The sender machine displays this error code when the sender fax is a Ricoh model.

WWW.SERVICE-MANUAL.NET

4. SERVICE TABLE

4.1 BEFOREHAND

CAUTION

- Never turn off the main power switch when the power LED is lit or flashing. To avoid damaging the hard disk or memory, press the operation power switch to switch the power off, wait for the power LED to go off, and then switch the main power switch off.

Note

- The main power LED (⏻) lights or flashes while the platen cover or ARDF is open, while the main machine is communicating with a facsimile or the network server, or while the machine is accessing the hard disk or memory for reading or writing data.

WWW.SERVICE-MANUAL.NET

4.2 SERVICE TABLES

4.2.1 SP1-XXX (BIT SWITCHES)

☛ Bit Switches

1	Mode No.		Function
101	System Switch		
	001 – 032	00 – 1F	Change the bit switches for system settings for the fax option ☛ "Bit Switches"
102	Ifax Switch		
	001 – 016	00 – 0F	Change the bit switches for internet fax settings for the fax option ☛ "Bit Switches"
103	Printer Switch		
	001 – 016	00 – 0F	Change the bit switches for printer settings for the fax option ☛ "Bit Switches"
104	Communication Switch		
	001 – 032	00 – 1F	Change the bit switches for communication settings for the fax option ☛ "Bit Switches"
105	G3-1 Switch		
	001 – 016	00 – 0F	Change the bit switches for the protocol settings of the standard G3 board ☛ "Bit Switches"

WWW.SERVICE-MANUAL.NET

106	G3-2 Switch		
	001 – 016	00 – 0F	Change the bit switches for the protocol settings of the optional G3 board ☛ "Bit Switches"
107	G3-3 Switch		
	001 – 016	00 – 0F	Change the bit switches for the protocol settings of the optional G3 board ☛ "Bit Switches"
108	G4 Internal Switch		
	001 – 032	00 – 1F	**Not used** (Do not change the bit switches)
109	G4 Parameter Switch		
	001 – 016	00 – 0F	**Not used** (Do not change the bit switches)
111	IP fax Switch		
	001 – 016	00 – 0F	Change the bit switches for optional IP fax parameters ☛ "Bit Switches"

WWW.SERVICE-MANUAL.NET

4.2.2 SP2-XXX (RAM DATA)

2	Mode No.		Function
101	RAM Read/Write		
	001		Change RAM data for the fax board directly. ☛ "Service RAM Addresses"
102	Memory Dump		
	001	G3-1 Memory Dump	Print out RAM data for the fax board. ☛ "Service RAM Addresses"
	002	G3-2 Memory Dump	Print out RAM data for the optional SG3 board.
	003	G3-3 Memory Dump	Print out RAM data for the optional SG3 board.
	004	G4 Memory Dump	Not used
103	G3-1 NCU Parameters		
	001 – 023	CC, 01 – 22	NCU parameter settings for the standard G3 board. ☛ "NCU Parameters"
104	G3-2 NCU Parameters		
	001 – 023	CC, 01 – 22	NCU parameter settings for the optional G3 board. ☛ "NCU Parameters"
105	G3-3 NCU Parameters		
	001 – 023	CC, 01 – 22	NCU parameter settings for the optional G3 board. ☛ "NCU Parameters"

WWW.SERVICE-MANUAL.NET

4.2.3 SP3-XXX (TEL LINE SETTINGS)

3	Mode No.		Function
101	Service Station		
	001	Fax Number	Enter the fax number of the service station.
	002	Select Line	Select the line type.
102	Serial Number		
	000		Enter the fax unit's serial number.
103	PSTN-1 Port Settings		
	001	Select Line	Select the line type setting for the G3-1 line. If the machine is installed on a PABX line, select "PABX", "PABX(GND)" or "PABX(FLASH)".
	002	PSTN Access Number	Enter the PSTN access number for the G3-1 line.
	003	Memory Lock Disabled	Not used
104	PSTN-2 Port Settings		
	001	Select Line	Select the line setting for the G3-2 line. If the machine is installed on a PABX line, select "PABX", "PABX(GND)" or "PABX(FLASH)".
	002	PSTN Access Number	Enter the PSTN access number for the G3-2 line.
	003	Memory Lock Disabled	Not used
	004	Transmission Disabled	If you turn this SP on, the machine does not send any fax messages on the G3-2 line.

WWW.SERVICE-MANUAL.NET

105	PSTN-3 Port Settings		
	001	Select Line	Select the line setting for the G3-3 line. If the machine is installed on a PABX line, select “PABX”, “PABX(GND)” or “PABX(FLASH)”.
	002	PSTN Access Number	Enter the PSTN access number for the G3-3 line.
	003	Memory Lock Disabled	Not used
	004	Transmission Disabled	If you turn this SP on, the machine does not send any fax messages on the G3-3 line.
106	ISDN Port Settings		
	001	Select Line	**Not used** (Do not change the settings.)
	002	PSTN Access Number	
	003	Memory Lock Disabled	
106	004	Transmission Disabled	
107	IPFAX Port Settings		
	001	H323 Port	Sets the H323 port number.
	002	SIP Port	Sets the SIP port number.
	003	RAS Port	Sets the RAS port number.
	004	Gatekeeper port	Sets the Gatekeeper port number.
	005	T.38 Port	Sets the T.38 port number.
	006	SIP Server Port	Sets the SIP port number.
	007	IPFAX Protocol	Select "H323" or "SIP".

WWW.SERVICE-MANUAL.NET

		Priority	
201	FAX SW		
	001 – 032	00 – 1F	

4.2.4 SP4-XXX (ROM VERSIONS)

4	Mode No.		Function
101	001	FCU ROM Version	Displays the FCU ROM version.
102	001	Error Codes	Displays the latest 64 fax error codes.
103	001	G3-1 ROM Version	Displays the G3-1 modem version.
104	001	G3-2 ROM Version	Displays the G3-2 modem version.
105	001	G3-3 ROM Version	Displays the G3-3 modem version.
106	001	G4 ROM Version	**Not used** (Do not change the settings.)
107	001	Charge ROM Version	**Not used** (Do not change the settings.)

WWW.SERVICE-MANUAL.NET

4.2.5 SP5-XXX (INITIALIZING)

5	Mode No.	Function
101	Initialize SRAM	
	000	Initializes the bit switches and user parameters, user data in the SRAM, files in the SAF memory, and clock.
102	Erase All Files	
	000	Erases all files stored in the SAF memory.
103	Reset Bit Switches	
	000	Resets the bit switches and user parameters.
104	Factory setting	
	000	Resets the bit switches and user parameters, user data in the SRAM and files in the SAF memory.
105	Initialize All Bit Switches	
	000	Initializes all the current bit switch settings.
106	Initialize Security Bit Switches	
	000	Initializes only the security bit switches. If you select automatic output/display for the user parameter switches, the security settings are initialized.

WWW.SERVICE-MANUAL.NET

4.2.6 SP6-XXX (REPORTS)

6	Mode No.		Function
101	System Parameter List		
	000	-	Touch the “ON” button to print the system parameter list.
102	Service Monitor Report		
	000	-	Touch the “ON” button to print the service monitor report.
103	G3 Protocol Dump List		
	001	G3 All Communications	Prints the protocol dump list of all communications for all G3 lines.
	002	G3-1 (All Communications)	Prints the protocol dump list of all communications for the G3-1 line.
	003	G3-1 (1 Communication)	Prints the protocol dump list of the last communication for the G3-1 line.
	004	G3-2 (All Communications)	Prints the protocol dump list of all communications for the G3-2 line.
	005	G3-2 (1 Communication)	Prints the protocol dump list of the last communication for the G3-2 line.
	006	G3-3 (All Communications)	Prints the protocol dump list of all communications for the G3-3 line.
	007	G3-3 (1 Communication)	Prints the protocol dump list of the last communication for the G3-3 line.
104	G4 Protocol Dump List		
	001	Dch + Bch 1	**Not used** (Do not change the settings.)

WWW.SERVICE-MANUAL.NET

	002	Dch	
	003	Bch 1 Link Layer	
	004	Dch Link Layer	
	005	Dch +Bch 2	
	006	Bch 2 Link Layer	
105	All Files print out		
	000	-	Prints out all the user files in the SAF memory, including confidential messages. Note ▪ Do not use this function, unless the customer is having trouble printing confidential messages or recovering files stored using the memory lock feature.
106	Journal Print out		
	001	All Journals	The machine prints all the communication records on the report.
	002	Specified Date	The machine prints all communication records after the specified date.
107	Log List Print out		
	001	All log files	These log print out functions are for designer use only.
	002	Printer	
	003	SC/TRAP Stored	
	004	Decompression	
	005	Scanner	
	006	JOB/SAF	

WWW.SERVICE-MANUAL.NET

	007	Reconstruction	
	008	JBIG	
	009	Fax Driver	
	010	G3CCU	
	011	Fax Job	
	012	CCU	
	013	Scanner Condition	
108	IP Protocol Dump List		
	001	All Communications	Prints the protocol dump list of all communications for the IP fax line.
	002	1 Communication	Prints the protocol dump list of the last communication for the IP fax line.

WWW.SERVICE-MANUAL.NET

4.2.7 SP7-XXX (TEST MODES)

These are the test modes for PTT approval.

7	Function
101	G3-1 Modem Tests
102	G3-1 DTMF Tests
103	Ringer Test
104	G3-1 V34 (S2400baud)
105	G3-1 V34 (S2800baud)
106	G3-1 V34 (S3000baud)
107	G3-1 V34 (S3200baud)
108	G3-1 V34 (S3429baud)
109	Recorded Message Test
110	G3-2 Modem Tests
111	G3-2 DTMF Tests
112	G3-2 V34 (S2400baud)
113	G3-2 V34 (S2800baud)
114	G3-2 V34 (S3000baud)
115	G3-2 V34 (S3200baud)
116	G3-2 V34 (S3429baud)
117	G3-3 Modem Tests
118	G3-3 DTMF Tests
119	G3-3 V34 (S2400baud)
120	G3-3 V34 (S2800baud)

WWW.SERVICE-MANUAL.NET

121	G3-3 V34 (S3000baud)
122	G3-3 V34 (S3200baud)
123	G3-3 V34 (S3429baud)
124	IG3-1 Modem Tests - **Not used**
125	IG3-1 DTMF Tests - **Not used**
126	IG3-1 V34 (S2400baud) - **Not used**
127	IG3-1 V34 (S2800baud) - **Not used**
128	IG3-1 V34 (S3000baud) - **Not used**
129	IG3-1 V34 (S3200baud) - **Not used**
130	IG3-1 V34 (S3429baud) - **Not used**
131	IG3-2 Modem Tests - **Not used**
132	IG3-2 DTMF Tests - **Not used**
133	IG3-2 V34 (S2400baud) - **Not used**
134	IG3-2 V34 (S2800baud) - **Not used**
135	IG3-2 V34 (S3000baud) - **Not used**
136	IG3-2 V34 (S3200baud) - **Not used**
137	IG3-2 V34 (S3429baud) - **Not used**

WWW.SERVICE-MANUAL.NET

4.3 BIT SWITCHES

WARNING

- Do not adjust a bit switch or use a setting that is described as “Not used”, as this may cause the machine to malfunction or to operate in a manner that is not accepted by local regulations. Such bits are for use only in other areas, such as Japan.

Note

- Default settings for bit switches are not listed in this manual. Refer to the System Parameter List printed by the machine.

4.3.1 SYSTEM SWITCHES

System Switch 00 [SP No. 1-101-001]		
No	**FUNCTION**	**COMMENTS**
0	Dedicated transmission parameter programming 0: Disabled, 1: Enabled	Set this bit to 1 before changing any dedicated transmission parameters. Reset this bit to 0 after programming dedicated transmission parameters.
1	**Not used**	Do not change
2	Technical data printout on the Journal 0: Disabled 1: Enabled	1: Instead of the personal name, the following data are listed on the Journal for each G3 communication.
	e.g. 0000 (1) // 32 (2) V34 (3) // 288 (4) // 264 (5) // L0100 (6) 03 (7) 04 (8) (1): EQM value (Line quality data). A larger number means more errors. (2): Symbol rate (V.34 only) (3): Final modem type used (4): Starting data rate (for example, 288 means 28.8 kbps) (5): Final data rate (6): Rx revel (refer to the note after this table for how to read the rx level) (7): Total number of error lines that occurred during non-ECM reception.	

WWW.SERVICE-MANUAL.NET

	(8): Total number of burst error lines that occurred during non-ECM reception. Note ▪ EQM and rx level are fixed at “FFFF” in tx mode. ▪ The seventh and eighth numbers are fixed at “00” for transmission records and ECM reception records.	
	Rx level calculation Example: 0000 // 32 V34 // 288/264 // L 01 00 03 04 The four-digit hexadecimal value (N) after “L” indicates the rx level. The high byte is given first, followed by the low byte. Divide the decimal value of N by -16 to get the rx level. In the above example, the decimal value of N (= 0100 [H]) is 256. So, the actual rx level is 256/-16 = -16 dB	
3	**Not used**	Do not change this setting.
4	Line error mark print 0: OFF, 1: ON (print)	When "1" is selected, a line error mark is printed on the printout if a line error occurs during reception.
5	G3/G4 communication parameter display 0: Disabled 1: Enabled	This is a fault-finding aid. The LCD shows the key parameters (see below). This is normally disabled because it cancels the CSI display for the user. Be sure to reset this bit to 0 after testing.
6	Protocol dump list output after each communication 0: Off 1: On	This is only used for communication troubleshooting. It shows the content of the transmitted facsimile protocol signals. Always reset this bit to 0 after finishing testing. If system switch 09 bit 6 is at “1”, the list is only printed if there was an error during the communication.
7	Not used	Do not change the setting.

System Switch 01 - Not used (Do not change the factory settings.)

WWW.SERVICE-MANUAL.NET

Bit Switches

System Switch 02 [SP No. 1-101-003]		
No	**FUNCTION**	**COMMENTS**
0-1	**Not used**	Do not change these settings.
2	Force after transmission stall 0: Off 1: On	With this setting on, the machine resets itself automatically if a transmission stalls and fails to complete the job.
3	**Not used**	Do not change these settings.
4	File retention time 0: Depends on User Parameter 24 [18(H)] 1: No limit (until the year 2126)	1: A file that had a communication error will not be erased unless the communication is successful.
5	**Not used**	Do not change this setting.
6-7	Memory read/write by RDS Bit 7: 0, Bit 6: 0 Always disabled Bit 7: 0, Bit 6: 1 User selectable Bit 7: 1, Bit 6: 0 User selectable Bit 7: 1, Bit 6: 1 Always enabled	(0,0): All RDS systems are always locked out. (0,1), (1,0): Normally, RDS systems are locked out, but the user can temporarily switch RDS on to allow RDS operations to take place. RDS will automatically be locked out again after a certain time, which is stored in System Switch 03. Note that if an RDS operation takes place, RDS will not switch off until this time limit has expired. (1,1): At any time, an RDS system can access the machine.

System Switch 03 [SP No. 1-101-004]		
No	**FUNCTION**	**COMMENTS**
0-7	Length of time that RDS is temporarily switched on when bits 6 and 7 of System Switch	00 - 99 hours (BCD). This setting is only valid if bits 6 and 7 of System Switch 02 are set to “User selectable”.

WWW.SERVICE-MANUAL.NET

	02 are set to “User selectable”	The default setting is 24 hours.

System Switch 04 [SP No. 1-101-005]		
No	**FUNCTION**	**COMMENTS**
0-2	**Not used**	Do not change these settings.
3	Printing dedicated tx parameters on Quick/Speed Dial Lists 0: Disabled 1: Enabled	1: Each Quick/Speed dial number on the list is printed with the dedicated tx parameters.
4-7	**Not used**	Do not change these settings.

System Switch 05 - Not used (Do not change the factory settings.)
System Switch 06 - Not used (Do not change the factory settings.)
System Switch 07 - Not used (Do not change the factory settings.)
System Switch 08 - Not used (Do not change the factory settings.)

System Switch 09 [SP No. 1-101-010]		
No	**FUNCTION**	**COMMENTS**
0	Addition of image data from confidential transmissions on the transmission result report 0: Disabled 1: Enabled	If this feature is enabled, the top half of the first page of confidential messages will be printed on transmission result reports.
1	Inclusion of communications on the Journal when no image data was exchanged. 0: Disabled 1: Enabled	0: Communications that reached phase C (message tx/rx) of the T.30 protocol are listed on the Journal. 1: Communications that reached phase A (call setup) of T.30 protocol are listed on the Journal.

WWW.SERVICE-MANUAL.NET

Bit Switches

		This will include telephone calls.
2	Automatic error report printout 0: Disabled 1: Enabled	0: Error reports will not be printed. 1: Error reports will be printed automatically after failed communications.
3	Printing of the error code on the error report 0: No 1: Yes	1: Error codes are printed on the error reports.
4	**Not used**	Do not change this setting.
5	Power failure report 0: Disabled 1: Enabled	1: A power failure report will be automatically printed after the power is switched on if a fax message disappeared from the memory when the power was turned off last.
6	Conditions for printing the protocol dump list 0: Print for all communications 1: Print only when there is a communication error	This switch becomes effective only when system switch 00 bit 6 is set to 1. 1: Set this bit to 1 when you wish to print a protocol dump list only for communications with errors.
7	Priority given to various types of remote terminal ID when printing reports 0: RTI > CSI > Dial label > Tel. Number 1: Dial label > Tel. number > RTI > CSI	This bit determines which set of priorities the machine uses when listing remote terminal names on reports. Dial Label: The name stored, by the user, for the Quick/Speed Dial number.

System Switch 0A [SP No. 1-101-011]

No	FUNCTION	COMMENTS
0	Automatic port selection 0: Disabled, 1: Enabled	When "1" is selected, a suitable port is automatically selected if the selected port is not used.

WWW.SERVICE-MANUAL.NET

1-3	**Not used**	Do not change these settings.
4	Dialing on the ten-key pad when the external telephone is off-hook 0: Disabled 1: Enabled	0: Prevents dialing from the ten-key pad while the external telephone is off-hook. Use this setting when the external telephone is not by the machine, or if a wireless telephone is connected as an external telephone. 1: The user can dial on the machine's ten-key pad when the handset is off-hook.
5	On hook dial 0: Disabled 1: Enabled	0: On hook dial is disabled.
6-7	**Not used**	Do not change the factory settings

System Switch 0B - Not used (Do not change the factory settings.)
System Switch 0C - Not used (Do not change the factory settings.)
System Switch 0D - Not used (Do not change the factory settings.)

System Switch 0E [SP No. 1-101-015]		
No	**FUNCTION**	**COMMENTS**
0-1	**Not used**	Do not change the settings.
2	Enable/disable for direct sending selection 0: Direct sending off 1: Direct sending on	Direct sending cannot operate when the capture function is on during sending. Setting this switch to "1" enables direct sending without capture. Setting this switch to "0" masks the direct sending function on the operation panel so it cannot be selected.
3	Action when the external handset goes off-hook 0: Manual tx and rx operation 1: Memory tx and rx operation (the display remains the same)	0: Manual tx and rx are possible while the external handset is off-hook. However, memory tx is not possible. 1: The display stays in standby mode even when the external handset is used, so that other people can use the machine for memory tx operation.

WWW.SERVICE-MANUAL.NET

Bit Switches

		Note that manual tx and rx are not possible with this setting.
4-7	**Not used**	Do not change these settings.

System Switch 0F [SP No. 1-101-016]

No	FUNCTION		COMMENTS
0-7	Country/area code for functional settings (Hex)		This country/area code determines the factory settings of bit switches and RAM addresses. However, it has no effect on the NCU parameter settings and communication parameter RAM addresses. **Cross reference** NCU country code: SP No. 2-103-001 for G3-1 SP No. 2-104-001 for G3-2 SP No. 2-105-001 for G3-3
	00: France	11: USA	
	01: Germany	12: Asia	
	02: UK	12: Asia	
	03: Italy	13: Japan	
	04: Austria	14: Hong Kong	
	05: Belgium	15: South Africa	
	06: Denmark	16: Australia	
	07: Finland	17: New Zealand	
	08: Ireland	18: Singapore	
	09: Norway	19: Malaysia	
	0A: Sweden	1A: China	
	0B: Switzerland	1B: Formosa	

WWW.SERVICE-MANUAL.NET

	0C: Portugal	1C: Korea	
	0D: Netherland	20: Turkey	
	0E: Spain	21: Greece	
	0F: Israel	22: Hungary	
	10: ---	23: Czech	
	11: USA	24: Poland	

System Switch 10 [SP No. 1-101-017]		
No	**FUNCTION**	**COMMENTS**
0-7	Threshold memory level for parallel memory transmission	Threshold = N x 128 KB + 256 KB N can be between 00 - FF(H) Default setting: 02(H) = 512 KB

System Switch 11 [SP No. 1-101-018]		
No	**FUNCTION**	**COMMENTS**
0	TTI printing position 0: Superimposed on the page data 1: Printed before the data leading edge	Change this bit to 1 if the TTI overprints information that the customer considers to be important (G3 transmissions).
1	**Not used**	Japan Only
2	**Not used**	Do not change the factory settings.
3	TTI printing type 0: Address unit 1: File unit	TTI printing unit can be selected.
4-6	**Not used**	Do not change the factory settings.
7	**Not used**	Japan Only

WWW.SERVICE-MANUAL.NET

Bit Switches

System Switch 12 [SP No. 1-101-019]		
No	**FUNCTION**	**COMMENTS**
0-7	TTI printing position in the main scan direction	TTI: 08 to 92 (BCD) mm Input even numbers only. This setting determines the print start position for the TTI from the left edge of the paper. If the TTI is moved too far to the right, it may overwrite the file number which is on the top right of the page. On an A4 page, if the TTI is moved over by more than 50 mm, it may overwrite the page number.

System Switch 13 - Not used (do not change these settings)
System Switch 14 - Not used (do not change these settings)

System Switch 15 [SP No. 1-101-022]		
No	**FUNCTION**	**COMMENTS**
0	**Not used**	Do not change the settings.
1	Going into the Energy Saver mode automatically 0: Enabled 1: Disabled	1: The machine will restart from the Energy Saver mode quickly, because the +5V power supply is active even in the Energy Saver mode.
2-3	**Not used**	Do not change these settings.
4-5	Interval for preventing the machine from entering Energy Saver mode if there is a pending transmission file. Bit 5: 0, Bit 4: 0 1 min Bit 5: 0, Bit 4: 1	If there is a file waiting for transmission, the machine does not go to Energy Saver mode during the selected period. After transmitting the file, if there is no file waiting for transmission, the machine goes to the Energy Saver mode.

WWW.SERVICE-MANUAL.NET

	30 min1 Bit 5: 1, Bit 4: 0 1 hour Bit 5: 1, Bit 4: 1 24 hours	
6-7	**Not used**	Do not change

System Switch 16 [SP No. 1-101-023]

No	FUNCTION	COMMENTS
0	Parallel Broadcasting 0: Disabled 1: Enabled	1: The machine sends messages simultaneously using all available ports during broadcasting.
1	Priority setting for the G3 line. 0: PSTN-1 > PSTN-2 or 3 1: PSTN-2 or 3 > PSTN-1	This function allows the user to select the default G3 line type. The optional SG3 unit(s) are required to use the PSTN-2 or 3 setting.
2-7	**Not used**	Do not change these settings.

System Switch 17 - Not used (do not change these settings)
System Switch 18 - Not used (do not change these settings)

System Switch 19 [SP No. 1-101-026]

No	FUNCTION	COMMENTS
0-5	**Not used**	Do not change the settings.
6	Extended scanner page memory after memory option is installed 0: Disabled	0: After installing the memory expansion option, the scanner page memory is extended to 4 MB from 2 MB. 1: If this bit is set to 1 after installing the memory

WWW.SERVICE-MANUAL.NET

Bit Switches

	1: Enabled	expansion option, the scanner page memory is extended to 12 MB. But the SAF memory decreases to 18 MB.
7	Special Original mode 0: Disabled 1: Enabled	1: If the customer frequently wishes to transmit a form or letterhead which has a colored or printed background, change this bit to “1”. “Original 1” and “Original 2” can be selected in addition to the “Text”, “Text/Photo” and “Photo” modes.

System Switch 1A [SP No. 1-101-027]			
No.	**FUNCTION**	**COMMENTS**	
0-7	LS RX memory remaining refresh value setting	Sets a value of 4K. If the amount of memory remaining falls below 4K, documents received in memory are printed to create more space in memory. Initial value: 0x80 (512K) 00-FF (0-1020 KB: Hex)	

System Switch 1B - Not used (do not change these settings)
System Switch 1C - Not used (do not change these settings)

System Switch 1D [SP No. 1-101-030]		
No	**FUNCTION**	**COMMENTS**
0	RTI/CSI/CPS code display 0: ON 1: OFF	0: RTI, CSI, CPS codes are displayed on the top line of the LCD panel during communication. 1: Codes are switched off (no display)
1-7	**Not used**	Do not change these settings.

System Switch 1E [SP No. 1-101-031]

WWW.SERVICE-MANUAL.NET

No	FUNCTION	COMMENTS
0	Communication after the Journal data storage area has become full 0: Impossible 1: Possible	0: When this switch is on and the journal history becomes full, the next report prints. If the journal history is not deleted, the next transmission cannot be received. This prevents overwriting communication records before the machine can print them. 1: If the buffer memory of the communication records for the Journal is full, fax communications are still possible. But the machine will overwrite the oldest communication records. Note: This setting is effective only when Automatic Journal printout is enabled but the machine cannot print the report (e.g., no paper).
1	Action when the SAF memory has become full during scanning 0: The current page is erased. 1: The entire file is erased.	0: If the SAF memory becomes full during scanning, the successfully scanned pages are transmitted. 1: If the SAF memory becomes full during scanning, the file is erased and no pages are transmitted. This bit switch is ignored for parallel memory transmission.
2	RTI/CSI display priority 0: RTI 1: CSI	This bit determines which identifier, RTI or CSI, is displayed on the LCD while the machine is communicating in G3 non-standard mode.
3	File No. printing 0: Enabled 1: Disabled	1: File numbers are not printed on any reports.
4	Action when authorized reception is enabled but authorized RTIs/CSIs are not yet programmed 0: All fax reception is disabled	If authorized reception is enabled but the user has stored no acceptable sender RTIs or CSIs, the machine will not be able to receive any fax messages. If the customer wishes to receive messages from

WWW.SERVICE-MANUAL.NET

Bit Switches

	1: Faxes can be received if the sender has an RTI or CSI	any sender that includes an RTI or CSI, and to block messages from senders that do not include an RTI or CSI, change this bit to “1”, then enable Authorized Reception. Otherwise, keep this bit at “0 (default setting)”.
5-7	**Not used**	Do not change the settings

System Switch 1F [SP No. 1-101-032]		
No	**FUNCTION**	**COMMENTS**
0	**Not used**	Do not change the settings.
1	Report printout after an original jam during SAF storage or if the SAF memory fills up 0: Enabled 1: Disabled	0: When an original jams, or the SAF memory overflows during scanning, a report will be printed. Change this bit to “1” if the customer does not want to have a report in these cases. Memory tx – Memory storage report Parallel memory tx – Transmission result report
2	**Not used**	Do not change the settings.
3	Received fax print start timing (G3 reception) 0: After receiving each page 1: After receiving all pages	0: The machine prints each page immediately after the machine receives it. 1: The machine prints the complete message after the machine receives all the pages in the memory.
4-6	**Not used**	Do not change the factory settings.
7	Action when a fax SC has occurred 0: Automatic reset 1: Fax unit stops	0: When the fax unit detects a fax SC code other than SC1201 and SC1207, the fax unit automatically resets itself. 1: When the fax unit detects any fax SC code, the fax unit stops. Cross Reference Fax SC codes - See “Troubleshooting”

WWW.SERVICE-MANUAL.NET

4.3.2 I-FAX SWITCHES

I-fax Switch 00 [SP No. 1-102-001]		
No	**FUNCTION**	**COMMENTS**
	Original Width of TX Attachment File	This setting sets the maximum size of the original that the destination can receive. (Bits 3~7 are reserved for future use or not used.)
0	A4	0: Off (not selected), 1: On (selected) If more than one of these three bits is set to “1”, the larger size has priority. For example, if both Bit 2 and Bit 1 are set to “1” then the maximum size is “A3” (Bit 2). When mail is sent, there is no negotiation with the receiving machine at the destination, so the sending machine cannot make a selection for the receiving capabilities (original width setting) of the receiving machine. The original width selected with this switch is used as the RX machine’s original width setting, and the original is reduced to this size before sending. The default is A4. If the width selected with this switch is higher than the receiving machine can accept, the machine detects this and this causes an error.
1	B4	
2	A3	
3-6	Reserved	
7	**Not used**	

I-fax Switch 01 [SP No. 1-102-002]		
No	**FUNCTION**	**COMMENTS**
	Original Line Resolution of TX Attachment File	These settings set the maximum resolution of the original that the destination can receive.
0	200x100 Standard	0: Not selected 1: Selected
1	200x200 Detail	

WWW.SERVICE-MANUAL.NET

Bit Switches

2	200x400 Fine	If more than one of these three bits is set to “1”, the higher resolution has priority. For example, if both Bit 0 and Bit 2 are set to “1” then the resolution is set for "Bit 2 200 x 400.
3	300 x 300 Reserve	
4	400 x 400 Super Fine	
5	600 x 600 Reserve	
6	Reserve	
7	mm/inch	
	This setting selects mm/inch conversion for mail transmission. 0: Off (No conversion), 1: On (Conversion) When on (set to “1”), the machine converts millimeters to inches for sending mail. There is no switch for converting inches to millimeters. Unlike G3 fax transmissions which can negotiate between sender and receiver to determine the setting, mail cannot negotiate between terminals; the mm/inch selection is determined by the sender fax. When this switch is Off (0): Images scanned in inches are sent in inches. Images scanned in mm are sent in mm. Images received in inches are transmitted in inches. Images received in mm are transmitted in mm. When this switch is On (1): Images scanned in inches are sent in inches. Images scanned in mm are converted to inches. Images received in inches are transmitted in inches. Images received in mm are converted to inches.	

I-fax Switch 02 [SP No. 1-102-003]		
No	**FUNCTION**	**COMMENTS**
0	RX Text Mail Header Processing	
	This setting determines whether the header information is printed with text e-mails when they are received. 0: Prints only text mail.	

WWW.SERVICE-MANUAL.NET

	1: Prints mail header information attached to text mail. When a text mail is received with this switch On (1), the “From” address and “Subject” address are printed as header information. When a mail with only binary data is received (a TIFF-F file, for example), this setting is ignored and no header is printed.
1	Output from Attached Document at E-mail TX Error
	This setting determines whether only the first page or all pages of an e-mail attachment are printed at the sending station when a transmission error occurs. This allows the customer to see which documents have not reached their intended destinations if sent to the wrong e-mail addresses, for example. 0: Prints 1st page only. 1: Prints all pages.
2-3	Text String for Return Receipt
	This setting determines the text string output for the Return Receipt that confirms the transmission was received normally at the destination.
	00: “Dispatched” Sends from PC mail a request for a Return Receipt. Receives the Return Receipt with “dispatched” in the 2nd part: Disposition: Automatic-action/MDN-send automatically; dispatched The “dispatched” string is included in the Subject string. 01: “Displayed” Sends from PC mail a request for a Return Receipt. Receives the Return Receipt with “displayed” in the 2nd part: Disposition: Automatic-action/MDN-send automatically; displayed The “displayed” string is included in the Subject string. 10: Reserved 11: Reserved A mail requesting a Return Receipt sent from an IFAX with this switch set to “00” (for “dispatched”) received by Microsoft Outlook 2000 may cause an error. If any setting other than “displayed” (01) causes a problem, change the setting to “01” to enable normal sending of the Return Receipt.
4	Media accept feature

WWW.SERVICE-MANUAL.NET

Bit Switches

	This setting adds or does not add the media accept feature to the answer mail to confirm a reception. 0: Does not add the media accept feature to the answer mail 1: Adds the media accept feature to the answer mail. Use this bit switch if a problem occurs when the machine receives an answer mail, which contains the media accept feature field.
5-6	**Not Used**
7	Image Resolution of RX Text Mail
	This setting determines the image resolution of the received mail. 0: 200 x 200 1: 400 x 400 The “1” setting requires installation of the Function Upgrade Card in order to have enough SAF (Store and Forward) memory to receive images at 400 x 400 resolution.

I-fax Switch 03 - Not used (do not change the settings) [SP No. 1-102-004]

I-fax Switch 04 [SP No. 1-102-005]

No	FUNCTION	COMMENTS
0	Subject for Delivery TX/Memory Transfer	
	This setting determines whether the RTI/CSI registered on this machine or the RTI/CSI of the originator is used in the subject lines of transferred documents. 0: Puts the RTI/CSI of the originator in the Subject line. If this is used, either the RTI or CSI is used. Only one of these can be received for use in the subject line. 1: Puts the RTI/CSI registered on this machine in the Subject line. When this switch is used to transfer and deliver mail to a PC, the information in the Subject line that indicates where the transmission originated can be used to determine automatically the destination folder for each e-mail.	
1	Subject corresponding to mail post database 0: Standard subject 1: Mail post database subject	

WWW.SERVICE-MANUAL.NET

	The standard subject is replaced by the mail post database subject in the following three cases: 1) When the service technician sets the service (software) switch. 2) When memory sending, delivery specified by F code or SMTP reception is done. 3) With relay broadcasting (1st stage without the Schmidt 4 function). Note ▪ This switch does not apply for condition 3) when the RX system is set up for memory sending, delivery by F-code, sending with SMTP RX and when operators are using FOL (to prevent problems when receiving transmissions).
2-7	**Not Used**

I-fax Switch 05 [SP No. 1-102-006]

No	FUNCTION	COMMENTS
0	Mail Addresses of SMTP Broadcast Recipients	
	Determines whether the e-mail addresses of the destinations that receive transmissions broadcasted using SMTP protocol are recorded in the Journal. For example: "1st destination + Total number of destinations: 9" in the Journal indicates a broadcast to 9 destinations. 0: Not recorded 1: Recorded	
1	I-Fax Automatic Re-dial Setting 0: OFF 1: ON	Determines whether the I-fax automatically redials when an error occurs.
2-7	**Not Used**	

I-fax Switch 06 - Not used (do not change the settings) [SP No. 1-102-007]
I-fax Switch 07 - Not used (do not change the settings) [SP No. 1-102-008]

WWW.SERVICE-MANUAL.NET

Bit Switches

I-fax Switch 08 [SP No. 1-102-009]		
No	**FUNCTION**	**COMMENTS**
0-7	Memory Threshold for POP Mail Reception	
	This setting determines the amount of SAF (Store and Forward) memory. (SAF stores fax messages to send later for transmission to more than one location, and also holds incoming messages if they cannot be printed.) When the amount of SAF memory available falls below this setting, mail can no longer be received; received mail is then stored on the mail server. 00-FF (0 to 1024 KB: HEX) Note ▪ The hexadecimal number you enter is multiplied by 4 KB to determine the amount of memory.	

I-fax Switch 09 [SP No. 1-102-010]		
No	**FUNCTION**	**COMMENTS**
0-3	**Not used**	Do not change the settings
4-7	Restrict TX Retries	This setting determines the number of retries when connection and transmission fails due to errors. 01-F (1-15 Hex)

I-fax Switch 0A - Not used (do not change the settings) **[SP No. 1-102-011]**
I-fax Switch 0B - Not used (do not change the settings) **[SP No. 1-102-012]**
I-fax Switch 0C - Not used (do not change the settings) **[SP No. 1-102-013]**
I-fax Switch 0D - Not used (do not change the settings) **[SP No. 1-102-014]**
I-fax Switch 0E - Not used (do not change the settings) **[SP No. 1-102-015]**

WWW.SERVICE-MANUAL.NET

I-fax Switch 0F [SP No. 1-102-016]		
No	**FUNCTION**	**COMMENTS**
0	Delivery Method for SMTP RX Files	
	This setting determines whether files received with SMTP protocol are delivered or output immediately. 0: Off. Files received via SMTP are output immediately without delivery. 1: On. Files received via SMTP are delivered immediately to their destinations.	
1	Signature for the SMTP	
	This setting determines whether a signature is put on an e-mail via SMTP. 0: No signature 1: Signature	
2	This setting determines whether an e-mail via SMTP is encrypted. 0: Not encrypted 1: Encrypted	
3-7	**Not used**	

WWW.SERVICE-MANUAL.NET

4.3.3 PRINTER SWITCHES

Printer Switch 00 [SP No. 1-103-001]		
No	**FUNCTION**	**COMMENTS**
0	Select page separation marks 0: Off 1: On	0: If a 2 page RX transmission is split, [*] is printed in the bottom right corner of the 1st page and only a [2] is printed in the upper right corner of the 2nd page. 1: If a 2 page RX transmission is split into two pages, for example, [*] [2] is printed in the bottom right corner of the 1st page and only a [2] is printed in the upper right corner of the 2nd page. Note ▪ This helps the user to identify pages that have been split because the size of the paper is smaller than the size of the document received. (When A5 is used to print an A4 size document, for example.)
1	Repetition of data when the received page is longer than the printer paper 0: Off 1: On	1: Default. 10 mm of the trailing edge of the previous page are repeated at the top of the next page. 0: The next page continues from where the previous page stopped without any repeated text.
2	Prints the date and time on received fax messages 0: Disabled 1: Enabled	This switch is only effective when user parameter 02 - bit 2 (printing the received date and time on received fax messages) is enabled. 1: The machine prints the received and printed date and time at the bottom of each received page.
3-7	**Not used**	Do not change the settings.

WWW.SERVICE-MANUAL.NET

Printer Switch 01 [SP No. 1-103-002]		
No	**FUNCTION**	**COMMENTS**
0-2	**Not used**	Do not change the settings.
3-4	Maximum print width used in the setup protocol Bit 4: 0, Bit 3: 0 = Not used Bit 4: 0, Bit 3: 1 = A3 Bit 4: 1, Bit 3: 0 = B4 Bit 4: 1, Bit 3: 1 = A4	These bits are only effective when bit 7 of printer switch 01 is “1”.
5-6	**Not used**	Do not change the settings.
7	Received message width restriction in the protocol signal to the sender 0: Disabled 1: Enabled	0: The machine informs the transmitting machine of the print width depending on the paper size available from the paper feed stations. Refer to the table on the next page for how the machine chooses the paper width used in the setup protocol (NSF/DIS). 1: The machine informs the transmitting machine of the fixed paper width which is specified by bits 3 and 4 above.

Printer Switch 02 [SP No. 1-103-003]		
No	**FUNCTION**	**COMMENTS**
0	1st paper feed station usage for fax printing 0: Enabled 1: Disabled	0: The paper feed station can be used to print fax messages and reports. 1: The specified paper feed station will not be used for printing fax messages and reports. Note ▪ Do not disable usage for a paper feed station which has been specified by User Parameter Switch 0F (15), or which is
1	2nd paper feed station usage for fax printing 0: Enabled 1: Disabled	

WWW.SERVICE-MANUAL.NET

Bit Switches

2	3rd paper feed station usage for fax printing 0: Enabled 1: Disabled	used for the Specified Cassette Selection feature.
3	4th paper feed station usage for fax printing 0: Enabled 1: Disabled	
4	LCT usage for fax printing 0: Enabled 1: Disabled	
5-7	**Not used**	Do not change the settings.

Printer Switch 03 [SP No. 1-103-004]		
No	**FUNCTION**	**COMMENTS**
0	Length reduction of received data 0: Disabled 1: Enabled	0: Incoming pages are printed without length reduction. (Page separation threshold: Printer Switch 03, bits 4 to 7) 1: Incoming page length is reduced when printing. (Maximum reducible length: Printer Switches 04, bits 0 to 4)
1-3	Not used	Do not change the settings
4-7	Page separation setting when sub scan compression is forbidden 00-0F (0-15 mm: Hex) Default: 6 mm	Page separation threshold (with reduction disabled with switch 03-0 above). For example, if this setting is set to "10", and A4 is the selected paper size: If the received document is 10 mm or less longer than A4, then the 10 mm are cut and only 1 page prints. If the received document is 10 mm longer than A4,

WWW.SERVICE-MANUAL.NET

		then the document is split into 2 pages.

Printer Switch 04
SP No. 1-103-005

No	FUNCTION	COMMENTS
0-4	Maximum reducible length when length reduction is enabled with switch 03-0 above. <Maximum reducible length> = <Paper length> + (N x 5mm) “N” is the decimal value of the binary setting of bits 0 to 4.	

Bit 4	Bit 3	Bit 2	Bit 1	Bit 0	Setting
0	0	0	0	0	0 mm
0	0	0	0	1	5 mm
0	0	1	0	0	20 mm
1	1	1	1	1	155 mm

For A5 sideways and B5 sideways paper
<Maximum reducible length> = <Paper length> + 0.75 x (N x 5mm)

5-6	Length of the duplicated image on the next page, when page separation has taken place. Bit 6: 0, Bit 5: 0 = 4 mm Bit 6: 1, Bit 5: 0 = 10 mm Bit 6: 0, Bit 5: 1 = 15 mm Bit 6: 1, Bit 5: 1 = **Not used**	
7	**Not used.**	Do not change the setting.

Printer Switch 05 - Not used (do not change the settings)

Printer Switch 06 [SP No. 1-103-007]

No	FUNCTION	COMMENTS

WWW.SERVICE-MANUAL.NET

Bit Switches

0	Printing while a paper cassette is pulled out, when the Just Size Printing feature is enabled. 0: Printing will not start 1: Printing will start if another cassette has a suitable size of paper, based on the paper size selection priority tables.	Cross reference Just size printing on/off – User switch 05, bit 5
1-7	**Not used.**	Do not change the settings.

Printer Switch 07 [SP No. 1-103-008]		
No	**FUNCTION**	**COMMENTS**
0-3	**Not used.**	Do not change the settings.
4	List of destinations in the Communication Failure Report for broadcasting 0: All destinations 1: Only destinations where communication failure occurred	1: Only destinations where communication failure occurred are printed on the Communication Failure Report.
5-7	**Not used.**	Do not change the settings.

Printer Switch 08 - Not used (do not change the settings)
Printer Switch 09 - Not used (do not change the settings)
Printer Switch 0A - Not used (do not change the settings)

Printer Switch 0B - Not used (do not change the settings)
Printer Switch 0C - Not used (do not change the settings)

WWW.SERVICE-MANUAL.NET

Printer Switch 0D - Not used (do not change the settings)

Printer Switch 0E [SP No. 1-103-015]		
No	**FUNCTION**	**COMMENTS**
0	Paper size selection priority 0: Width 1: Length	0: A paper size that has the same width as the received data is selected first. 1: A paper size which has enough length to print all the received lines without reduction is selected first.
1	Paper size selected for printing A4 width fax data 0: 8.5" x 11" size 1: A4 size	This switch determines which paper size is selected for printing A4 width fax data, when the machine has both A4 and 8.5" x 11" size paper.
2	Page separation 0: Enabled 1: Disabled	1: If all paper sizes in the machine require page separation to print a received fax message, the machine does not print the message (Substitute Reception is used). After a larger size of paper is set in a cassette, the machine automatically prints the fax message.
3-4	Printing the sample image on reports Bit 4: 0, Bit 3: 0 = The upper half only Bit 4: 0, Bit 3: 1 = 50% reduction in sub-scan only Bit 4: 1, Bit 3: 0 = Same size Bit 4: 1, Bit 3: 1 = **Not used**	“Same size” means the sample image is printed at 100%, even if page separation occurs. User Parameter Switch 19 (13H) bit 4 must be set to “0” to enable this switch. Refer to Detailed Section Descriptions for more on this feature.
5-6	**Not used**	Do not change the settings.
7	Equalizing the reduction ratio	0: When page separation has taken place, all the

WWW.SERVICE-MANUAL.NET

	among separated pages (Page Separation) 0: Enabled 1: Disabled	pages are reduced with the same reduction ratio. 1: Only the last page is reduced to fit the selected paper size when page separation has taken place. Other pages are printed without reduction.

Printer Switch 0F [SP No. 1-103-016]		
No	**FUNCTION**	**COMMENTS**
0-1	Smoothing feature Bit 1: 0 Bit 0: 0 = Disabled Bit 1: 0 Bit 0: 1 = Disabled Bit 1: 1 Bit 0: 0 = Enabled Bit 1: 1 Bit 0: 1 = **Not used**	(0, 0) (0, 1): Disable smoothing if the machine receives halftone images from other manufacturers fax machines frequently.
2	Duplex printing 0: Disabled 1: Enabled	1: The machine always prints received fax messages in duplex printing mode:
3	Binding direction for Duplex printing 0: Left binding 1: Top binding	0: Sets the binding for the left edge of the stack. 1: Sets the binding for the top of the stack.
4-7	**Not used**	Do not change the settings.

WWW.SERVICE-MANUAL.NET

4.3.4 COMMUNICATION SWITCHES

Communication Switch 00 [SP No. 1-104-001]		
No	**FUNCTION**	**COMMENTS**
0-1	Compression modes available in receive mode Bit 1: 0 Bit 0: 0 = MH only Bit 1: 0 Bit 0: 1 = MH/MR Bit 1: 1 Bit 0: 0 = MH/MR/MMR Bit 1: 1 Bit 0: 1 = MH/MR/MMR/JBIG	These bits determine the compression capabilities to be declared in phase B (handshaking) of the T.30 protocol.
2-3	Compression modes available in transmit mode Bit 3: 0 Bit 2: 0 = MH only Bit 3: 0 Bit 2: 1 = MH/MR Bit 3: 1 Bit 2: 0 = MH/MR/MMR Bit 3: 1 Bit 2: 1 = MH/MR/MMR/JBIG	These bits determine the compression capabilities to be used in the transmission and to be declared in phase B (handshaking) of the T.30 protocol.
4	**Not used**	Do not change the settings.
5	JBIG compression method: Reception 0: Only basic supported 1: Basic and optional both supported	Change the setting when communication problems occur using JBIG compression.
6	JBIG compression method: Transmission 0: Basic mode priority 1: Optional mode priority	Change the setting when communication problems occur using JBIG compression.
7	**Not used**	Do not change the settings.

WWW.SERVICE-MANUAL.NET

Bit Switches

Communication Switch 01 [SP No. 1-104-002]		
No	**FUNCTION**	**COMMENTS**
0	ECM 0: Off 1: On	If this bit is set to 0, ECM is switched off for all communications. In addition, V.8 protocol and JBIG compression are switched off automatically.
1	**Not used**	Do not change the settings.
2-3	Wrong connection prevention method Bit 3: 0, Bit 2: 0 = None Bit 3: 0, Bit 2: 1 = 8 digit CSI Bit 3: 1, Bit 2: 0 = 4 digit CSI Bit 3: 1, Bit 2: 1 = CSI/RTI	(0,1) - The machine will disconnect the line without sending a fax message, if the last 8 digits of the received CSI do not match the last 8 digits of the dialed telephone number. This does not work when manually dialed. (1,0) - The same as above, except that only the last 4 digits are compared. (1,1) - The machine will disconnect the line without sending a fax message, if the other end does not identify itself with an RTI or CSI. (0,0) - Nothing is checked; transmission will always go ahead. Note ▪ This function does not work when dialing is done from the external telephone.
4-5	**Not used**	Do not change the setting.
6-7	Maximum printable page length available Bit 7: 0 Bit 6: 0 = No limit Bit 7: 0 Bit 6: 1 = B4 (364 mm) Bit 7: 1 Bit 6: 0 = A4 (297 mm) Bit 7: 1 Bit 6: 1 = **Not used**	The setting determined by these bits is informed to the transmitting terminal in the pre-message protocol exchange (in the DIS/NSF frames).

Communication Switch 02 [SP No. 1-104-003]

WWW.SERVICE-MANUAL.NET

No	FUNCTION	COMMENTS	
0	G3 Burst error threshold 0: Low 1: High	If there are more consecutive error lines in the received page than the threshold, the machine will send a negative response. The Low and High threshold values depend on the sub-scan resolution, and are as follows.	
		100 dpi	6(L) ➜ 12(H)
		200 dpi	12(L) ➜ 24(H)
		300 dpi	18(L) ➜ 36(H)
		400 dpi	24(L) ➜ 48(H)
1	Acceptable total error line ratio 0: 5% 1: 10%	If the error line ratio for a page exceeds the acceptable ratio, RTN will be sent to the other end.	
2	Treatment of pages received with errors during G3 reception 0: Deleted from memory without printing 1: Printed	0: Pages received with errors are not printed.	
3	Hang-up decision when a negative code (RTN or PIN) is received during G3 immediate transmission 0: No hang-up, 1: Hang-up	0: The next page will be sent even if RTN or PIN is received. 1: The machine will send DCN and hang up if it receives RTN or PIN. This bit is ignored for memory transmissions or if ECM is being used.	
4-7	**Not used**	Do not change the settings.	

Communication Switch 03 [SP No. 1-104-004]		
No	**FUNCTION**	**COMMENTS**
0-7	Maximum number of page	00 - FF (Hex) times.

WWW.SERVICE-MANUAL.NET

	retransmissions in a G3 memory transmission	This setting is not used if ECM is switched on. Default setting - 03(H)

Communication Switch 04 - Not used (do not change the settings)
Communication Switch 05 - Not used (do not change the settings)
Communication Switch 06 - Not used (do not change the settings)
Communication Switch 07 - Not used (do not change the settings)
Communication Switch 08 - Not used (do not change the settings)

Communication Switch 09 [SP No. 1-104-010]		
No	**FUNCTION**	**COMMENTS**
0-7	IP-Fax dial interval setting	Adjusts the interval of the I-fax dialing. The interval of I-fax dialing is calculated by following formula. [Interval time = specified value with this switch x 0.2 msec]

Communication Switch 0A [SP No. 1-104-011]		
No	**FUNCTION**	**COMMENTS**
0	Point of resumption of memory transmission upon redialing 0: From the error page 1: From page 1	0: The transmission begins from the page where transmission failed the previous time. 1: Transmission begins from the first page, using normal memory transmission.
1-7	**Not used**	Do not change the settings.

Communication Switch 0B [SP No. 1-104-012]		
No	**FUNCTION**	**COMMENTS**

WWW.SERVICE-MANUAL.NET

0-3	**Not used**	Do not change the settings.
4	Print setting when receiving a request to forward a fax	0: The machine does not print fax data. 1: The machine prints fax data.
5-7	**Not used**	Do not change the settings.

Communication Switch 0C - Not used (do not change the settings)

Communication Switch 0D [SP No. 1-104-014]

No	FUNCTION	COMMENTS
0-7	The available memory threshold, below which ringing detection (and therefore reception into memory) is disabled	00 to FF (Hex), unit = 4 kbytes (e.g., 06(H) = 24 kbytes) One page is about 24 kbytes. The machine refers to this setting before each fax reception. If the amount of remaining memory is below this threshold, the machine cannot receive any fax messages. If this setting is kept at 0, the machine will detect ringing signals and go into receive mode even if there is no memory available. This will result in communication failure.

Communication Switch 0E [SP No. 1-104-015]

No	FUNCTION	COMMENTS
0-7	Minimum interval between automatic dialing attempts	06 to FF (Hex), unit = 2 s (e.g., 06(H) = 12 s) This value is the minimum time that the machine waits before it dials the next destination.

Communication Switch 0F – Not used (do not change the settings.)

WWW.SERVICE-MANUAL.NET

Bit Switches

Communication Switch 10 [SP No. 1-104-017]		
No	**FUNCTION**	**COMMENTS**
0-7	Memory transmission: Maximum number of dialing attempts to the same destination	01 – FE (Hex) times

Communication Switch 11 – Not used (do not change the settings.)

Communication Switch 12 [SP No. 1-104-019]		
No	**FUNCTION**	**COMMENTS**
0-7	Memory transmission: Interval between dialing attempts to the same destination	01 – FF (Hex) minutes

Communication Switch 13 – Not used (do not change the settings.)

Communication Switch 14 [SP No. 1-104-021]		
No	**FUNCTION**	**COMMENTS**
0	Inch-to-mm conversion during transmission 0: Disabled 1: Enabled	0: In immediate transmission, data scanned in inch format are transmitted without conversion. In memory transmission, data stored in the SAF memory in mm format are transmitted without conversion. Note: When storing the scanned data into SAF memory, the fax unit always converts the data into mm format. 1: The machine converts the scanned data or stored data in the SAF memory to the format which was specified in the set-up protocol

WWW.SERVICE-MANUAL.NET

		(DIS/NSF) before transmission.
1-5	**Not used**	Do not change the factory settings.
6-7	Available unit of resolution in which fax messages are received Bit 7: 0, Bit 6: 0 = mm Bit 7: 0, Bit 6: 1 = inch Bit 7: 1, Bit 6: 0 = mm and inch (default) Bit 7: 1, Bit 6: 1 = **Not used**	For the best performance, do not change the factory settings. The setting determined by these bits is informed to the transmitting terminal in the pre-message protocol exchange (in the DIS/NSF frames).

Communication Switch 15 – Not used (do not change the settings)

Communication Switch 16 [SP No. 1-104-023]		
No	**FUNCTION**	**COMMENTS**
0	**Not used**	Do not change the factory settings.
1	Optional G3 unit (G3-2) 0: Off 1: On	Change this bit to "1" when installing the first optional G3 unit (G3-2).
2	**Not used**	Do not change the factory settings.
3	Optional G3 unit (G3-3) 0: Off 1: On	Change this bit to "1" when installing the second optional G3 unit (G3-3).
4-7	**Not used**	Do not change the factory settings.

Communication Switch 17 [SP No. 1-104-024]		
No	**FUNCTION**	**COMMENTS**
0	SEP reception	0: Polling transmission to another maker's

WWW.SERVICE-MANUAL.NET

Bit Switches

	0: Disabled 1: Enabled	machine using the SEP (Selective Polling) signal is disabled.
1	SUB reception 0: Disabled 1: Enabled	0: Confidential reception to another maker's machine using the SUB (Sub-address) signal is disabled.
2	PWD reception 0: Disabled 1: Enabled	0: Disables features that require PWD (Password) signal reception.
3-6	**Not used**	Do not change the factory settings.
7	Action when there is no box with an F-code that matches the received SUB code 0: Disconnect the line 1: Receive the message (using normal reception mode)	Change this setting when the customer requires.

Communication Switch 18 [SP No. 1-104-025]		
No	**FUNCTION**	**COMMENTS**
0-4	**Not used**	Do not change the factory settings.
5	IP-Fax dial-in routing selection 0: Off 1: On	1: Transfers receiving data to each IP-Fax dial-in number. IP-Fax dial-in number is 4 digit-number.
6-7	**Not used**	Do not change the factory settings.

Communication Switch 19 - Not used (do not change the settings)
Communication Switch 1A - Not used (do not change the settings)

Communication Switch 1B [SP No. 1-104-028]

WWW.SERVICE-MANUAL.NET

No	FUNCTION	COMMENTS
0-7	Extension access code (0 to 7) to turn V.8 protocol On/Off 0: On 1: Off	If the PABX does not support V.8/V.34 protocol procedure, set this bit to “1” to disable V.8. Example: If “0” is the PSTN access code, set bit 0 to 1. When the machine detects “0” as the first dialed number, it automatically disables V.8 protocol. (Alternatively, if “3” is the PSTN access code, set bit 3 to 1.)

Communication Switch 1C [SP No. 1-104-029]		
No	**FUNCTION**	**COMMENTS**
0-1	Extension access code (8 and 9) to turn V.8 protocol On/Off 0: On 1: Off	Refer to communication switch 1B. Example: If “8” is the PSTN access code, set bit 0 to 1. When the machine detects “8” as the first dialed number, it automatically disables V.8 protocol. (If “9” is the PSTN access code, use bit 1.)
2-7	**Not used**	Do not change the settings.

Communication Switch 1D - Not used (do not change the settings)
Communication Switch 1E - Not used (do not change the settings)
Communication Switch 1F - Not used (do not change the settings)

WWW.SERVICE-MANUAL.NET

4.3.5 G3 SWITCHES

G3 Switch 00 [SP No. 1-105-001]		
No	**FUNCTION**	**COMMENTS**
0 1	Monitor speaker during communication (tx and rx) Bit 1: 0, Bit 0: 0 = Disabled Bit 1: 0, Bit 0: 1 = Up to Phase B Bit 1: 1, Bit 0: 0 = All the time Bit 1: 1, Bit 0: 1 = **Not used**	(0, 0): The monitor speaker is disabled all through the communication. (0, 1): The monitor speaker is on up to phase B in the T.30 protocol. (1, 0): Used for testing. The monitor speaker is on all through the communication. Make sure that you reset these bits after testing.
2	Monitor speaker during memory transmission 0: Disabled 1: Enabled	1: The monitor speaker is enabled during memory transmission.
3-5	**Not used**	Do not change the settings.
6	G3 mode selection for direct line 0: Off 1:On	1: G3 communication through the direct line is enabled.
7	**Not used**	Do not change the settings.

G3 Switch 01 [SP No. 1-105-002]		
No	**FUNCTION**	**COMMENTS**
0-1	**Not used**	Do not change the settings.
2-3	**Not used**	Do not change the settings.
4	DIS frame length 0: 10 bytes 1: 4 bytes	1: The bytes in the DIS frame after the 4th byte will not be transmitted (set to 1 if there are communication problems with PC-based faxes

WWW.SERVICE-MANUAL.NET

		which cannot receive the extended DIS frames).
5	**Not used**	Do not change the setting.
6	Forbid CED/AMsam output 0: Off 1: On (Forbid output)	Do not change this setting (Default: 0: Off), unless communication problem is caused by a CED or ANSam transmission.
7	**Not used**	Do not change the setting.

G3 Switch 02 [SP No. 1-105-003]		
No	**FUNCTION**	**COMMENTS**
0	G3 protocol mode used 0: Standard and non-standard 1: Standard only	Change this bit to 1 only when the other end can only communicate with machines that send T.30-standard frames only. 1: Disables NSF/NSS signals (these are used in non-standard mode communication)
1-6	**Not used**	Do not change the settings.
7	Short preamble 0: Disabled 1: Enabled	Refer to Appendix B in the Group 3 Facsimile Manual for details about Short Preamble.

G3 Switch 03 [SP No. 1-105-004]		
No	**FUNCTION**	**COMMENTS**
0	DIS detection number (Echo countermeasure) 0: 1 1: 2	0: The machine will hang up if it receives the same DIS frame twice. 1: Before sending DCS, the machine will wait for the second DIS which is caused by echo on the line.
1	**Not Used**	Do not change the settings.
2	V.8 protocol 0: Disabled	0: V.8/V.34 communications will not be possible. Note:

WWW.SERVICE-MANUAL.NET

Bit Switches

	1: Enabled	Do not set to 0 unless the line condition is always bad enough to slow down the data rate to 14.4 kbps or lower.
3	ECM frame size 0: 256 bytes 1: 64 bytes	Keep this bit at “0” in most cases.
4	CTC transmission conditions 0: After one PPR signal received 1: After four PPR signals received (ITU-T standard)	0: When using ECM in non-standard (NSF/NSS) mode, the machine sends a CTC to drop back the modem rate after receiving a PPR, if the following condition is met in communications at 14.4, 12.0, 9.6, and 7.2 kbps. $\sqrt{\text{NTransmit} \leq \text{NResend}}$ NTransmit- Number of transmitted frames NResend- Number of frames to be retransmitted 1: When using ECM, the machine sends a CTC to drop back the modem rate after receiving four PPRs. PPR, CTC: These are ECM protocol signals. This bit is not effective in V.34 communications.
5	Modem rate used for the next page after receiving a negative code (RTN or PIN) 0: No change 1: Fallback	1: The machine’s tx modem rate will fall back before sending the next page if a negative code is received. This bit is ignored if ECM is being used.
6	**Not Used**	Do not change the settings
7	Select detection of reverse polarity in ringing 0: Off 1: On	This switch is used to prevent reverse polarity in ringing on the phone line (applied to PSTN-G3 ringing). Do not change this setting 0: No detection ⇒ Outside Japan 1: Detection ⇒ Inside Japan only

WWW.SERVICE-MANUAL.NET

G3 Switch 04 [SP No. 1-105-005]		
No	**FUNCTION**	**COMMENTS**
0-3	Training error detection threshold	0 - F (Hex); 0 - 15 bits If the number of error bits in the received TCF is below this threshold, the machine informs the sender that training has succeeded.
4-7	**Not used**	Do not change the settings.

G3 Switch 05 [SP No. 1-105-006]						
No	**FUNCTION**					**COMMENTS**
0-3	Initial Tx modem rate					These bits set the initial starting modem rate for transmission. Use the dedicated transmission parameters if you need to change this for specific receivers. If a modem rate 14.4 kbps or slower is selected, V.8 protocol should be disabled manually. Cross reference V.8 protocol on/off - G3 switch 03, bit2
	Bit 3	Bit 2	Bit 1	Bit 0	bps	
	0	0	0	1	2.4k	
	0	0	1	0	4.8k	
	0	0	1	1	7.2k	
	0	1	0	0	9.6k	
	0	1	0	1	12.0k	
	0	1	1	0	14.4k	
	0	1	1	1	16.8k	
	1	0	0	0	19.2k	
	1	0	0	1	21.6k	
	1	0	1	0	24.0k	
	1	0	1	1	26.4k	
	1	1	0	0	28.8k	
	1	1	0	1	31.2k	

WWW.SERVICE-MANUAL.NET

Bit Switches

	1	1	1	0	33.6k	
	Other settings - **Not used**					
4-5	Initial modem type for 9.6 k or 7.2 kbps. Bit 5: 0, Bit 4: 0 = V.29 Bit 5: 0, Bit 4: 1 = V.17 Bit 5: 1, Bit 4: 0 = V.34 Bit 5: 1, Bit 4: 1 = **Not used**					These bits set the initial modem type for 9.6 and 7.2 kbps, if the initial modem rate is set at these speeds.
6-7	**Not used**					Do not change the settings.

G3 Switch 06 [SP No. 1-105-007]						
No	**FUNCTION**					**COMMENTS**
0-3	Initial Rx modem rate					▪ These bits set the initial starting modem rate for reception. ▪ Use a lower setting if high speeds pose problems during reception. ▪ If a modem rate 14.4 kbps or slower is selected, V.8 protocol should be disabled manually. Cross reference: V.8 protocol on/off - G3 switch 03, bit2
	Bit 3	Bit 2	Bit 1	Bit 0	bps	
	0	0	0	1	2.4k	
	0	0	1	0	4.8k	
	0	0	1	1	7.2k	
	0	1	0	0	9.6k	
	0	1	0	1	12.0k	
	0	1	1	0	14.4k	
	0	1	1	1	16.8k	
	1	0	0	0	19.2k	
	1	0	0	1	21.6k	
	1	0	1	0	24.0k	
	1	0	1	1	26.4k	

WWW.SERVICE-MANUAL.NET

	1	1	0	0	28.8k	
	1	1	0	1	31.2k	
	1	1	1	0	33.6k	
	Other settings - **Not used**					
4-7	Modem types available for reception					▪ The setting of these bits is used to inform the transmitting terminal of the available modem type for the machine in receive mode. ▪ If V.34 is not selected, V.8 protocol must be disabled manually. Cross reference: V.8 protocol on/off - G3 switch 03, bit2
	Bit 7	Bit 6	Bit 5	Bit 4	Setting	
	0	0	0	1	V.27ter	
	0	0	1	0	V.27ter,V.29	
	0	0	1	1	V.27ter, V.29, V.33	
	0	1	0	0	V.27ter, V.29, V.17/V.33	
	0	1	0	1	V.27ter, V.29, V.17/V33, V.34	
	Other settings - **Not used**					

G3 Switch 07 [SP No. 1-105-008]		
No	**FUNCTION**	**COMMENTS**
0-1	PSTN cable equalizer (tx mode: Internal) Bit 1: 0, Bit 0: 0 = None Bit 1: 0, Bit 0: 1 = Low Bit 1: 1, Bit 0: 0 = Medium Bit 1: 1, Bit 0: 1 = High	Use a higher setting if there is signal loss at higher frequencies because of the length of wire between the modem and the telephone exchange. Use the dedicated transmission parameters for specific receivers. Also, try using the cable equalizer if one or more of the following symptoms occurs.

WWW.SERVICE-MANUAL.NET

Bit Switches

		Communication error Modem rate fallback occurs frequently. Note ▪ This setting is not effective in V.34 communications.
2-3	PSTN cable equalizer (rx mode: Internal) Bit 3: 0, Bit 2: 0 = None Bit 3: 0, Bit 2: 1 = Low Bit 3: 1, Bit 2: 0 = Medium Bit 3: 1, Bit 2: 1 = High	Use a higher setting if there is signal loss at higher frequencies because of the length of wire between the modem and the telephone exchange. Also, try using the cable equalizer if one or more of the following symptoms occurs. Communication error with error codes such as 0-20, 0-23, etc. Modem rate fallback occurs frequently. Note ▪ This setting is not effective in V.34 communications.
4	PSTN cable equalizer (V.8/V.17 rx mode: External) 0: Disabled 1: Enabled	Keep this bit at “1”.
5	**Not used**	Do not change the settings.
6	Parameter selection for dial tone detection 0: Normal parameter 1: Specific parameter	0: This uses the fixed table in the ROM for dial tone detection. 1: This uses the specific parameter adjusted with SRAM (69ECBEH - 69ECDEH). Select this if the dial tone cannot be detected when the "Normal parameter: 0" is selected.
7	**Not used**	Do not change the settings.

G3 Switch 08 - Not used (do not change the settings)

WWW.SERVICE-MANUAL.NET

G3 Switch 09 - Not used (do not change the settings)

G3 Switch 0A [SP No. 1-105-011]		
No	**FUNCTION**	**COMMENTS**
0-1	Maximum allowable carrier drop during image data reception Bit 1: 0, Bit 0: 0 = 200 (ms) Bit 1: 0, Bit 0: 1 = 400 (ms) Bit 1: 1, Bit 0: 0 = 800 (ms) Bit 1: 1, Bit 0: 1 = **Not used**	These bits set the acceptable modem carrier drop time. Try using a longer setting if error code 0-22 is frequent.
2	Select cancellation of high-speed RX if carrier signal lost while receiving 0: Off 1: On	This switch setting determines if high-speed receiving ends if the carrier signal is lost when receiving during non-ECM mode
3	**Not used**	Do not change the settings
4	Maximum allowable frame interval during image data reception. 0: 5 s 1: 13 s	This bit set the maximum interval between EOL (end-of-line) signals and the maximum interval between ECM frames from the other end. Try using a longer setting if error code 0-21 is frequent.
5	**Not used**	Do not change the settings.
6	Reconstruction time for the first line in receive mode 0: 6 s 1: 12 s	When the sending terminal is controlled by a computer, there may be a delay in receiving page data after the local machine accepts set-up data and sends CFR. This is outside the T.30 recommendation. But, if this delay occurs, set this bit to 1 to give the sending machine more time to send data. Refer to error code 0-20.

WWW.SERVICE-MANUAL.NET

Bit Switches

		ITU-T T.30 recommendation: The first line should come within 5 s of CFR.
7	**Not used**	Do not change the settings.

G3 Switch 0B - Not used (do not change the settings).
G3 Switch 0C - Not used (do not change the settings)
G3 Switch 0D - Not used (do not change the settings).

G3 Switch 0E [SP No 1-105-015]		
0-7	Set CNG send time interval Some machines on the receiving side may not be able to automatically switch the 3-second CNG interval.	
	High order bit	3000-2250ms: 3000-50xNms 3000 – 50 x Nms 0F (3000 ms) ≤ N ≤ FF (2250 ms)
	Low order bit	00-0E(3000-3700ms: 3000+50xNms 3000 – 50 x Nms 0F (3000 ms) ≤ N ≤ 0F (3700 ms)

G3 Switch 0F [SP No. 1-105-016]		
No	**FUNCTION**	**COMMENTS**
0	Alarm when an error occurred in Phase C or later 0: Disabled 1: Enabled	If the customer wants to hear an alarm after each error communication, change this bit to “1”.
1	Alarm when the handset is off-hook at the end of communication 0: Disabled 1: Enabled	If the customer wants to hear an alarm if the handset is off-hook at the end of fax communication, change this bit to “1”.

WWW.SERVICE-MANUAL.NET

2	**Not used**	Do not change the settings.
4	Sidaa manual calibration setting 0: Off 1: On	1: manually calibrates for communication with a line, whose current change occurs such as an optical fiber line.
5-7	**Not used**	Do not change the settings.

WWW.SERVICE-MANUAL.NET

4.3.6 G3-2/3 SWITCHES

These switches require an optional G3 interface unit.

G3-3 switches are the same as for G3-2 switches.

G3-2 Switch 00 [SP No. 1-106-001]		
No	**FUNCTION**	**COMMENTS**
0-1	Monitor speaker during communication (tx and rx) Bit 1: 0, Bit 0: 0 = Disabled Bit 1: 0, Bit 0: 1 = Up to Phase B Bit 1: 1, Bit 0: 0 = All the time Bit 1: 1, Bit 0: 1 = Not used	(0, 0): The monitor speaker is disabled all through the communication. (0, 1): The monitor speaker is on up to phase B in the T.30 protocol. (1, 0): Used for testing. The monitor speaker is on all through the communication. Make sure that you reset these bits after testing.
2	Monitor speaker during memory transmission 0: Disabled 1: Enabled	1: The monitor speaker is enabled during memory transmission.
3-6	**Not used**	Do not change the settings.

G3-2 Switch 01 [SP No. 1-106-002]		
No	**FUNCTION**	**COMMENTS**
0-3	**Not used**	Do not change the settings.
4	DIS frame length 0: 10 bytes, 1: 4 bytes	1: The bytes in the DIS frame after the 4th byte will not be transmitted (set to 1 if there are communication problems with PC-based faxes which cannot receive the extended DIS frames).
5	**Not used**	Do not change the setting.
6	CED/ANSam transmission 0: Disabled 1: Enabled	Do not change this setting, unless the communication problem is caused by the CED/ANSam transmission.

WWW.SERVICE-MANUAL.NET

7	**Not used**	Do not change the setting.

G3-2 Switch 02 [SP No. 1-106-003]		
No	**FUNCTION**	**COMMENTS**
0	G3 protocol mode used 0: Standard and non-standard 1: Standard only	Change this bit to 1 only when the other end can only communicate with machines that send T.30-standard frames only. 1: Disables NSF/NSS signals (these are used in non-standard mode communication)
1-4	**Not used**	Do not change the settings.
5	Use of modem rate history for transmission using Quick/Speed Dials 0: Disabled 1: Enabled	0: Communications using Quick/Speed Dials always start from the highest modem rate. 1: The machine refers to the modem rate history for communications with the same machine when determining the most suitable rate for the current communication.
6	**Not used**	Do not change the settings.
7	Short preamble 0: Disabled, 1: Enabled	Refer to Appendix B in the Group 3 Facsimile Manual for details about Short Preamble.

G3-2 Switch 03 [SP No. 1-106-004]		
No	**FUNCTION**	**COMMENTS**
0	DIS detection number (Echo countermeasure) 0: 1 1: 2	0: The machine will hang up if it receives the same DIS frame twice. 1: Before sending DCS, the machine will wait for the second DIS which is caused by echo on the line.
1	**Not used**	Do not change the settings.
2	V.8 protocol	0: V.8/V.34 communications will not be possible.

WWW.SERVICE-MANUAL.NET

Bit Switches

	0: Disabled 1: Enabled	Note ▪ Do not set to 0 unless the line condition is always bad enough to slow down the data rate to 14.4 kbps or lower.
3	ECM frame size 0: 256 bytes 1: 64 bytes	Keep this bit at “0” in most cases.
4	CTC transmission conditions 0: After one PPR signal received 1: After four PPR signals received (ITU-T standard)	0: When using ECM in non-standard (NSF/NSS) mode, the machine sends a CTC to drop back the modem rate after receiving a PPR, if the following condition is met in communications at 14.4, 12.0, 9.6, and 7.2 kbps. $\sqrt{\text{NTransmit} \leq \text{NResend}}$ NTransmit- Number of transmitted frames NResend- Number of frames to be retransmitted 1: When using ECM, the machine sends a CTC to drop back the modem rate after receiving four PPRs. PPR, CTC: These are ECM protocol signals. This bit is not effective in V.34 communications.
5	Modem rate used for the next page after receiving a negative code (RTN or PIN) 0: No change, 1: Fallback	1: The machine’s tx modem rate will fall back before sending the next page if a negative code is received. This bit is ignored if ECM is being used.
6	**Not used**	Do not change the settings.
7	**Not used**	Do not change the settings.

G3-2 Switch 04 [SP No. 1-106-005]		
No	**FUNCTION**	**COMMENTS**

WWW.SERVICE-MANUAL.NET

0-3	Training error detection threshold	0 - F (Hex); 0 - 15 bits If the number of error bits in the received TCF is below this threshold, the machine informs the sender that training has succeeded.
4-7	**Not used**	Do not change the settings.

G3-2 Switch 05 [SP No. 1-106-006]

No	FUNCTION					COMMENTS
0-3	Initial Tx modem rate					These bits set the initial starting modem rate for transmission. Use the dedicated transmission parameters if you need to change this for specific receivers. If a modem rate 14.4 kbps or slower is selected, V.8 protocol should be disabled manually. **Cross reference** V.8 protocol on/off - G3 switch 03, bit2
	Bit 3	Bit 2	Bit 1	Bit 0	bps	
	0	0	0	1	2.4k	
	0	0	1	0	4.8k	
	0	0	1	1	7.2k	
	0	1	0	0	9.6k	
	0	1	0	1	12.0k	
	0	1	1	0	14.4k	
	0	1	1	1	16.8k	
	1	0	0	0	19.2k	
	1	0	0	1	21.6k	
	1	0	1	0	24.0k	
	1	0	1	1	26.4k	
	1	1	0	0	28.8k	
	1	1	0	1	31.2k	
	1	1	1	0	33.6k	
	Other settings - **Not used**					

WWW.SERVICE-MANUAL.NET

Bit Switches

4-5	Initial modem type for 9.6 k or 7.2 kbps. Bit 5: 0, Bit 4: 0 = V.29 Bit 5: 0, Bit 4: 1 = V.17 Bit 5: 1, Bit 4: 0 = V.34 Bit 5: 1, Bit 4: 1 = **Not used**	These bits set the initial modem type for 9.6 and 7.2 kbps, if the initial modem rate is set at these speeds.
6-7	**Not used**	Do not change the settings.

G3-2 Switch 06 [SP No. 1-106-007]

No	FUNCTION					COMMENTS
0-3	Initial Rx modem rate					▪ These bits set the initial starting modem rate for reception. ▪ Use a lower setting if high speeds pose problems during reception. ▪ If a modem rate 14.4 kbps or slower is selected, V.8 protocol should be disabled manually. **Cross reference**: V.8 protocol on/off - G3 switch 03, bit2
	Bit 3	Bit 2	Bit 1	Bit 0	bps	
	0	0	0	1	2.4k	
	0	0	1	0	4.8k	
	0	0	1	1	7.2k	
	0	1	0	0	9.6k	
	0	1	0	1	12.0k	
	0	1	1	0	14.4k	
	0	1	1	1	16.8k	
	1	0	0	0	19.2k	
	1	0	0	1	21.6k	
	1	0	1	0	24.0k	
	1	0	1	1	26.4k	
	1	1	0	0	28.8k	
	1	1	0	1	31.2k	

WWW.SERVICE-MANUAL.NET

	1	1	1	0	33.6k	
	Other settings - **Not used**					
4-7	Modem types available for reception					▪ The setting of these bits is used to inform the transmitting terminal of the available modem type for the machine in receive mode. ▪ If V.34 is not selected, V.8 protocol must be disabled manually. Cross reference: V.8 protocol on/off - G3 switch 03, bit2
	Bit 7	Bit 6	Bit 5	Bit 4	Setting	
	0	0	0	1	V.27ter	
	0	0	1	0	V.27ter,V.29	
	0	0	1	1	V.27ter, V.29, V.33	
	0	1	0	0	V.27ter, V.29, V.17/V.33	
	0	1	0	1	V.27ter, V.29, V.17/V33, V.34	
	Other settings - **Not used**					

G3-2 Switch 07 [SP No. 1-106-008]		
No	**FUNCTION**	**COMMENTS**
0-1	PSTN cable equalizer (tx mode: Internal) Bit 1: 0, Bit 0: 0 = None Bit 1: 0, Bit 0: 1 = Low Bit 1: 1, Bit 0: 0 = Medium Bit 1: 1, Bit 0: 1 = High	Use a higher setting if there is signal loss at higher frequencies because of the length of wire between the modem and the telephone exchange. Use the dedicated transmission parameters for specific receivers. Also, try using the cable equalizer if one or more of the following symptoms occurs. Communication error Modem rate fallback occurs frequently. Note

WWW.SERVICE-MANUAL.NET

Bit Switches

		▪ This setting is not effective in V.34 communications.
2-3	PSTN cable equalizer (rx mode: Internal) Bit 3: 0, Bit 2: 0 = None Bit 3: 0, Bit 2: 1 = Low Bit 3: 1, Bit 2: 0 = Medium Bit 3: 1, Bit 2: 1 = High	Use a higher setting if there is signal loss at higher frequencies because of the length of wire between the modem and the telephone exchange. Also, try using the cable equalizer if one or more of the following symptoms occurs. Communication error with error codes such as 0-20, 0-23, etc. Modem rate fallback occurs frequently. Note ▪ This setting is not effective in V.34 communications.
4	PSTN cable equalizer (V.8/V.17 rx mode: External) 0: Disabled 1: Enabled	Keep this bit at “1”.
5	**Not used**	Do not change the settings.
6	Parameter selection for dial tone detection 0: Normal parameter 1: Specific parameter	0: This uses the fixed table in the ROM for dial tone detection. 1: This uses the specific parameter adjusted with SRAM (69ECBEH - 69ECDEH). Select this if the dial tone cannot be detected when the "Normal parameter: 0" is selected.
7	**Not used**	Do not change the settings.

G3-2 Switch 08 - Not used (do not change the settings)
G3-2 Switch 09 - Not used (do not change the settings)

G3-2 Switch 0A [SP No. 1-106-011]		
No	**FUNCTION**	**COMMENTS**

WWW.SERVICE-MANUAL.NET

0-1	Maximum allowable carrier drop during image data reception Bit 1: 0, Bit 0: 0 = 200 (ms) Bit 1: 0, Bit 0: 1 = 400 (ms) Bit 1: 1, Bit 0: 0 = 800 (ms) Bit 1: 1, Bit 0: 1 = **Not used**	These bits set the acceptable modem carrier drop time. Try using a longer setting if error code 0-22 is frequent.
2	Select cancellation of high-speed RX if carrier signal lost while receiving 0: Off 1: On	This switch setting determines if high-speed receiving ends if the carrier signal is lost when receiving during non-ECM mode
3	**Not used**	Do not change the settings
4	Maximum allowable frame interval during image data reception. 0: 5 s 1: 13 s	This bit set the maximum interval between EOL (end-of-line) signals and the maximum interval between ECM frames from the other end. Try using a longer setting if error code 0-21 is frequent.
5	**Not used**	Do not change the settings.
6	Reconstruction time for the first line in receive mode 0: 6 s 1: 12 s	When the sending terminal is controlled by a computer, there may be a delay in receiving page data after the local machine accepts set-up data and sends CFR. This is outside the T.30 recommendation. But, if this delay occurs, set this bit to 1 to give the sending machine more time to send data. Refer to error code 0-20. ITU-T T.30 recommendation: The first line should come within 5 s of CFR.
7	**Not used**	Do not change the settings.

G3-2 Switch 0B - Not used (do not change the settings.)

WWW.SERVICE-MANUAL.NET

Bit Switches

G3-2 Switch 0C - Not used (do not change the settings.)
G3-2 Switch 0D - Not used (do not change the settings)
G3-2 Switch 0E - Not used (do not change the settings)
G3-2 Switch 0F - Not used (do not change the settings)

WWW.SERVICE-MANUAL.NET

4.3.7 IP FAX SWITCHES

IP Fax Switch 00 [SP No. 1-111-001]		
No.	**FUNCTION**	**COMMENTS**
0	**Not used**	Do not change this setting.
1	IP Fax Transport 0: TCP, 1: UDP	Selects TCP or UDP protocol for IP-Fax
2	IP Fax single port selection 0: OFF, 1: ON (enable)	Selects single data port.
3	IP Fax double ports (single data port) selection 0: OFF, 1: ON (enable)	Selects whether IP-Fax uses a double port.
4	IP Fax Gatekeeper 0: OFF, 1: ON (enable)	Enables/disables the communication via the gatekeeper for IP-Fax.
5	IP Fax T30 bit signal reverse 0: LSB first, 1: MSB first	Reverses the T30 bit signal.
6	IP Fax max bit rate setting 0: Not affected, 1: Affected	When "0" is selected, the max bit rate does not affect the value of the DIS/DCS. When "1" is selected, the max bit rate affects the value of the DIS/DCS.
7	IP Fax received telephone number confirmation 0: No confirmation, 1: Confirmation	When "0" is selected, fax data is received without checking the telephone number. When "1" is selected, fax data is received only when confirming that the telephone number from the sender matches the registered telephone number in this machine. If this confirmation fails, the line is disconnected.

WWW.SERVICE-MANUAL.NET

Bit Switches

IP-Fax Switch 01						
No.	**FUNCTION**					**COMMENTS**
0-3	Select IP FAX Delay Level					Raise the level by selecting a higher setting if too many transmission errors are occurring on the network. If TCP/UDP is enabled on the network, raise this setting on the T.30 machine. Increasing the delay time allows the recovery of more lost packets. If only UDP is enabled, increase the number of redundant packets. Level 1~2: 3 Redundant packets Level 3: 4 Redundant packets
	Bit3	Bit2	Bit1	Bit0	Setting	
	0	0	0	0	Level 0	
	0	0	0	1	Level 1	
	0	0	1	0	Level 2	
	0	0	1	1	Level 3	
4-7	IP Fax preamble wait time setting					Selects the preamble wait time. [00 to 0f] There are 16 values in this 4-bit binary switch combination. Waiting time: set value level x 100 ms Max: 0f (1500 ms) Min: 00 (No wait time) The default is "0000" (00H).

IP Fax Switch 02 [SP No. 1-111-003]		
No.	**FUNCTION**	**COMMENTS**
0	IP Fax bit signal reverse setting 0: Maker code setting 1: Internal bit switch setting	When "0" is selected, the bit signal reverse method is decided by the maker code. When "1" is selected, the bit signal reverse method is decided by the internal bit switch. When communicating between IP Fax devices, LSB first is selected.)
1	IP Fax transmission speed setting 0: Modem speed 1: No limitation	Selects the transmit speed for IP Fax communication.

WWW.SERVICE-MANUAL.NET

2	SIP transport setting 0: TCP 1: UDP	This bit switch sets the transport that has priority for receiving IP Fax data. This function is activated only when the sender has both TCP and UDP.
3	CCM connection 0: No CCM connection 1: CCM connection	When "1" is selected, only the connection call message with H.323 or no tunneled H.245 is transmitted via CCM.
4	Message reception selection from non-registered SIP server 0: Answer 1: Not answer	0: This answers the INVITE message from the SIP server not registered for the machine. 1: This does not receive the INVITE message from the SIP server not registered for the machine and send a refusal message.
5	ECM communication setting 0: No limit for image compression 1: Limit for image compression	0: This does not limit the type of the image compression with ECM communication. 1: When the other end machine is Ciscco, this permits the image compression other than JBIG or MMR with ECM communication.
6-7	**Not used**	Do not change these settings.

IP Fax Switch 03 [SP No. 1-111-004]		
No.	**FUNCTION**	**COMMENTS**
0	Effective field limitation for G3 standard function information 0: OFF, 1: 4byte (DIS)	Limits the effective field for standard G3 function information.
1	Switching between G3 standard and G3 non standard 0: Enable switching 1: G3 standard only	Enables/disables switching between G3 standard and G3 non-standard.
2	Not used.	Do not change this setting.

WWW.SERVICE-MANUAL.NET

Bit Switches

3	ECM frame size selection at transmitting 0: 256byte, 1: 64byte	Selects the ECM frame size for sending.
4	DIS detection times for echo prevention 0: 1 time, 1: 2 times	Sets the number of times for DIS to detect echoes.
5	CTC transmission selection 0: PPRx1 1: PPRx4	When "0" is selected, the transmission condition is decided by error frame numbers. When "1" is selected, the transmission condition is based on the ITU-T method.
6	Shift down setting at receiving negative code 0: OFF, 1: ON	Selects whether to shift down when negative codes are received.
7	**Not used**	Do not change this setting.

IP Fax Switch 04 [SP No. 1-111-005]		
No.	**FUNCTION**	**COMMENTS**
0	TCF error threshold	Sets the TCF error threshold level. [00 to 0f] The default is "1111" (0fH).
1		
2		
3		
4-7	**Not used**	Do not change these settings.

IP Fax Switch 05 [SP No. 1-111-006]		
No.	**FUNCTION**	**COMMENTS**
0-3	Modem bit rate setting for transmission Sets the modem bit rate for transmission. The default is "0110" (14.4K bps).	

WWW.SERVICE-MANUAL.NET

	Bit 3	Bit 2	Bit 1	Bit 0	
	0	0	0	1	2400 bps
	0	0	1	1	4800 bps
	0	0	1	1	7200 bps
	0	1	0	0	9600 bps
	0	1	0	1	12.0 Kbps
	0	1	1	0	14.4 Kbps
4-5	Modem setting for transmission Sets the modem for transmission. The default is "00" (V29). Bit 5: 0, Bit 4: 0 = V29 Bit 5: 0, Bit 4: 1 = V17 Bit 5: 1, Bit 4: 0 = V34* Bit 5: 1, Bit 4: 1 = **Not used** *V34 is not supported for IP-Fax communication.				
6-7	**Not used**		Do not change these settings.		

IP Fax Switch 06 [SP No. 1-111-007]					
No.	**FUNCTION**		**COMMENTS**		
0-3	Modem bit rate setting for reception Sets the modem bit rate for reception. The default is "0110" (14.4K bps).				
	Bit 3	Bit 2	Bit 1	Bit 0	
	0	0	0	1	2400 bps
	0	0	1	0	4800 bps
	0	0	1	1	7200 bps
	0	1	0	0	9600 bps

WWW.SERVICE-MANUAL.NET

Bit Switches

	0	1	0	1	12.0 Kbps
	0	1	1	0	14.4 Kbps
4-7	Modem setting for reception Sets the modem type for reception. The default is "0100" (V27ter, V29, V17).				
	Bit 7	Bit 6	Bit 5	Bit 4	
	0	0	0	1	V27ter
	0	0	1	0	V27ter, V29
	0	0	1	1	V27ter, V29, V33 (invalid)
	0	1	0	0	V27ter, V29, V17
	0	1	0	1	V27ter, V29, V17, V34*
	*V34 is not supported for IP-Fax communication.				

IP Fax Switch 07 [SP No. 1-111-008]		
No.	**FUNCTION**	**COMMENTS**
0	TSI information 0: Not added, 1: Added	Adds or does not add TSI information to NSS(S).
1	DCN transmission setting at T1 timeout 0: Not transmitted, 1: Transmitted	Transmits or does not transmit DCN at T1 timeout.
2	**Not used**	Do not change this setting.
3	Hang up setting at DIS reception disabled 0: No hang up 1: Hang up after transmitting DCN	Sets whether the machine disconnects after DIS reception.

WWW.SERVICE-MANUAL.NET

4	Number of times for training 0: 1 time, 1: 2 times	Selects the number of times training is done at the same bit rate.
5	Space CSI transmission setting at no CSI registration 0: Not transmitted, 1: Transmitted	When "0" is selected, frame data is enabled. When "1" is selected, the transmitted data is all spaces.
6-7	**Not used**	Do not change these settings.

IP Fax Switch 08 [SP No. 1-111-009]		
No.	**FUNCTION**	**COMMENTS**
0-1	T1 timer adjustment Adjusts the T1 timer. The default is "00" (35 seconds). Bit 1: 0, Bit 0: 0 = 35 sec Bit 1: 0, Bit 0: 1 = 40 sec Bit 1: 1, Bit 0: 0 = 50 sec Bit 1: 1, Bit 0: 1 = 60 sec	-
2-3	T4 timer adjustment Adjust the T4 timer. The default is "00" (3 seconds). Bit 3: 0, Bit 2: 0 = 3 sec Bit 3: 0, Bit 2: 1 = 3.5 sec Bit 3: 1, Bit 2: 0 = 4 sec Bit 3: 1, Bit 2: 1 = 5 sec	-
4-5	T0 timer adjustment Bit 5: 0, Bit 4: 0 = 75 sec Bit 5: 0, Bit 4: 1 = 120 sec Bit 5: 1, Bit 4: 0 = 180 sec Bit 5: 1, Bit 4: 1 = 240 sec	Adjusts the fail safe timer. This timer sets the interval between "setup" data transmission and T.38 phase decision. If your destination return is late on the network or G3 fax return is late, adjust the longer interval timer. The default is "00" (75 seconds).
6-7	**Not used**	Do not change these settings.

WWW.SERVICE-MANUAL.NET

Bit Switches

IP Fax Switch 09 [SP No. 1-111-010]		
No.	**FUNCTION**	**COMMENTS**
0	Network I/F setting for SIP connection 0: IPv4 1: IPv6.	Selects the connection type (IPV4 or IPV6) to connect to the SIP server.
1	Network I/F setting for Fax communication 0: Same setting as SIP server connection 1: Automatic setting	0: The I/F setting for fax communication follows the setting for SIP server connection. 1: The negotiation between the SIP server and the device decides whether IPv4 or IPv6 is used for the I/F setting for fax communication.
2	Record-route setting 0: Disable 1: Enable	0: Disables the record-route function of the SIP server. 1: Enables the record-route function of the SIP server.
3-7	**Not used**	Do not change these settings.

WWW.SERVICE-MANUAL.NET

4.4 NCU PARAMETERS

The following tables give the RAM addresses and the parameter calculation units that the machine uses for ringing signal detection and automatic dialing. The factory settings for each country are also given. Most of these must be changed by RAM read/write (SP2-102), but some can be changed using NCU Parameter programming (SP2-103, 104 and 105); if SP2-103, 104 and 105 can be used, this will be indicated in the Remarks column. The RAM is programmed in hex code unless (BCD) is included in the Unit column.

Note

- The following addresses describe settings for the standard NCU.
- Change the fourth digit from “5” to “6” (e.g. 680500 to 680600) for the settings for the first optional G3 interface unit and from “5” to “7” (e.g. 680700) for the settings for the second optional G3 interface unit.

Address	Function					
680500	Country/Area code for NCU parameters					
	Use the Hex value to program the country/area code directly into this address, or use the decimal value to program it using SP2-103-001					
	Country /Area	**Decimal**	**Hex**	**Country /Area**	**Decimal**	**Hex**
	France	00	00	USA	17	11
	Germany	01	01	Asia	18	12
	UK	02	02	Hong Kong	20	14
	Italy	03	03	South Africa	21	15
	Austria	04	04	Australia	22	16
	Belgium	05	05	New Zealand	26	17
	Denmark	06	06	Singapore	24	18
	Finland	07	07	Malaysia	25	19

WWW.SERVICE-MANUAL.NET

NCU Parameters

Address	Function					
	Ireland	08	08	China	26	1A
	Norway	09	09	Taiwan	27	1B
	Sweden	10	0A	Korea	28	1C
	Switzerland	11	0B	Turkey	32	20
	Portugal	12	0C	Greece	33	21
	Holland	13	0D	Hungary	34	22
	Spain	14	0E	Czech	35	23
	Israel	15	0F	Poland	36	24

Address	Function	Unit	Remarks
680501	Line current detection time	20 ms	Line current detection is disabled. Line current is not detected if 680501 contains FF.
680502	Line current wait time		
680503	Line current drop detect time		
680504	PSTN dial tone frequency upper limit (high byte)	Hz (BCD)	If both addresses contain FF(H), tone detection is disabled.
680505	PSTN dial tone frequency upper limit (low byte)		
680506	PSTN dial tone frequency lower limit (high byte)	Hz (BCD)	If both addresses contain FF(H), tone detection is disabled.
680507	PSTN dial tone frequency lower limit (low byte)		
680508	PSTN dial tone detection time	20 ms	If 680508 contains FF(H), the machine
680509	PSTN dial tone reset time (LOW)		

WWW.SERVICE-MANUAL.NET

Address	Function	Unit	Remarks
68050A	PSTN dial tone reset time (HIGH)		pauses for the pause time (address 68050D / 68050E). Italy: See Note 2.
68050B	PSTN dial tone continuous tone time		
68050C	PSTN dial tone permissible drop time		
68050D	PSTN wait interval (LOW)		-
68050E	PSTN wait interval (HIGH)		
68050F	PSTN ring-back tone detection time	20 ms	Detection is disabled if this contains FF.
680510	PSTN ring-back tone off detection time	20 ms	-
680511	PSTN detection time for silent period after ring-back tone detected (LOW)	20 ms	-
680512	PSTN detection time for silent period after ring-back tone detected (HIGH)	20 ms	-
680513	PSTN busy tone frequency upper limit (high byte)	Hz (BCD)	If both addresses contain FF(H), tone detection is disabled.
680514	PSTN busy tone frequency upper limit (low byte)		
680515	PSTN busy tone frequency lower limit (high byte)	Hz (BCD)	If both addresses contain FF(H), tone detection is disabled.
680516	PSTN busy tone frequency lower limit (low byte)		
680517	PABX dial tone frequency upper limit (high byte)	Hz (BCD)	If both addresses contain FF(H), tone

WWW.SERVICE-MANUAL.NET

NCU Parameters

Address	Function	Unit	Remarks
680518	PABX dial tone frequency upper limit (low byte)		detection is disabled.
680519	PABX dial tone frequency lower limit (high byte)	Hz (BCD)	If both addresses contain FF(H), tone detection is disabled.
68051A	PABX dial tone frequency lower limit (low byte)		
68051B	PABX dial tone detection time	20 ms	If 68051B contains FF, the machine pauses for the pause time (680520 / 680521).
68051C	PABX dial tone reset time (LOW)		
68051D	PABX dial tone reset time (HIGH)		
68051E	PABX dial tone continuous tone time		
68051F	PABX dial tone permissible drop time		
680520	PABX wait interval (LOW)		-
680521	PABX wait interval (HIGH)		
680522	PABX ringback tone detection time	20 ms	If both addresses contain FF(H), tone detection is disabled.
680523	PABX ringback tone off detection time	20 ms	
680524	PABX detection time for silent period after ringback tone detected (LOW)	20 ms	If both addresses contain FF(H), tone detection is disabled.
680525	PABX detection time for silent period after ringback tone detected (HIGH)	20 ms	
680526	PABX busy tone frequency upper limit (high byte)	Hz (BCD)	If both addresses contain FF(H), tone

WWW.SERVICE-MANUAL.NET

Address	Function	Unit	Remarks
680527	PABX busy tone frequency upper limit (low byte)		detection is disabled.
680528	PABX busy tone frequency lower limit (high byte)	Hz (BCD)	If both addresses contain FF(H), tone detection is disabled.
680529	PABX busy tone frequency lower limit (low byte)		
68052A	Busy tone ON time: range 1	20 ms	-
68052B	Busy tone OFF time: range 1		
68052C	Busy tone ON time: range 2		
68052D	Busy tone OFF time: range 2		
68052E	Busy tone ON time: range 3		
68052F	Busy tone OFF time: range 3	20 ms	
680530	Busy tone ON time: range 4		
680531	Busy tone OFF time: range 4		
680532	Busy tone continuous tone detection time		
680533	Busy tone signal state time tolerance for all ranges, and number of cycles required for detection (a setting of 4 cycles means that ON-OFF-ON or OFF-ON-OFF must be detected twice). Tolerance (±) Bit 1: 0, Bit 0: 0 = 75% Bits 2 and 3 must always be kept at 0. Bit 1: 0, Bit 0: 0 = 50% Bits 2 and 3 must always be kept at 0. Bit 1: 0, Bit 0: 0 = 25% Bit 1: 0, Bit 0: 0 = 12.5% Bits 7, 6, 5, 4 - number of cycles required for cadence detection		
680534	International dial tone frequency upper limit (high byte)	Hz (BCD)	If both addresses contain FF(H), tone

WWW.SERVICE-MANUAL.NET

NCU Parameters

Address	Function	Unit	Remarks
680535	International dial tone frequency upper limit (low byte)		detection is disabled.
680536	International dial tone frequency lower limit (high byte)	Hz (BCD)	If both addresses contain FF(H), tone detection is disabled.
680537	International dial tone frequency lower limit (low byte)		
680538	International dial tone detection time	20 ms	If 680538 contains FF, the machine pauses for the pause time (68053D / 68053E). Belgium: See Note 2.
680539	International dial tone reset time (LOW)		
68053A	International dial tone reset time (HIGH)		
68053B	International dial tone continuous tone time		
68053C	International dial tone permissible drop time		
68053D	International dial wait interval (LOW)		-
68053E	International dial wait interval (HIGH)		
68053F	Country dial tone upper frequency limit (HIGH)	Hz (BCD)	If both addresses contain FF(H), tone detection is disabled.
680540	Country dial tone upper frequency limit (LOW)		
680541	Country dial tone lower frequency limit (HIGH)		If both addresses contain FF(H), tone detection is disabled.
680542	Country dial tone lower frequency		

WWW.SERVICE-MANUAL.NET

Address	Function	Unit	Remarks
	limit (LOW)		
680543	Country dial tone detection time	20 ms	If 680543 contains FF, the machine pauses for the pause time (680548 / 680549).
680544	Country dial tone reset time (LOW)		
680545	Country dial tone reset time (HIGH)		
680546	Country dial tone continuous tone time	-	-
680547	Country dial tone permissible drop time	20 ms	-
680548	Country dial wait interval (LOW)		
680549	Country dial wait interval (HIGH)		
68054A	Time between opening or closing the DO relay and opening the OHDI relay	1 ms	See Notes 3, 6 and 8. SP2-103-012 (parameter 11).
68054B	Break time for pulse dialing	1 ms	See Note 3. SP2-103-013 (parameter 12).
68054C	Make time for pulse dialing	1 ms	See Note 3. SP2-103-014 (parameter 13).
68054D	Time between final OHDI relay closure and DO relay opening or closing	1 ms	See Notes 3, 6 and 8. SP2-103-015 (parameter 14). This parameter is only valid in Europe.
68054E	Minimum pause between dialed digits (pulse dial mode)	20 ms	See Note 3 and 8. SP2-103-016

WWW.SERVICE-MANUAL.NET

NCU Parameters

Address	Function	Unit	Remarks
			(parameter 15).
68054F	Time waited when a pause is entered at the operation panel		SP2-103-017 (parameter 16). See Note 3.
680550	DTMF tone on time	1 ms	SP2-103-018 (parameter 17).
680551	DTMF tone off time		SP2-103-019 (parameter 18).
680552	Tone attenuation level of DTMF signals while dialing	-N x 0.5 –3.5 dBm	SP2-103-020 (parameter 19). See Note 5.
680553	Tone attenuation value difference between high frequency tone and low frequency tone in DTMF signals	-dBm x 0.5	SP2-103-021 (parameter 20). The setting must be less than –5dBm, and should not exceed the setting at 680552h above. See Note 5.
680554	PSTN: DTMF tone attenuation level after dialling	-N x 0.5 –3.5 dBm	SP2-103-022 (parameter 21). See Note 5.
680555	ISDN: DTMF tone attenuation level after dialling	-dBm x 0.5	See Note 5
680556	Not used	-	Do not change the settings.
680557	Time between 68054Dh (NCU parameter 14) and 68054Eh (NCU parameter 15)	1 ms	This parameter takes effect when the country code is set to France.
680558	Not used	-	Do not change the

WWW.SERVICE-MANUAL.NET

Address	Function	Unit	Remarks
			setting.
680559	Grounding time (ground start mode)	20 ms	The Gs relay is closed for this interval.
68055A	Break time (flash start mode)	1 ms	The OHDI relay is open for this interval.
68055B	International dial access code (High)	BCD	For a code of 100: 68055B - F1 68055C - 00
68055C	International dial access code (Low)		
68055D	PSTN access pause time	20 ms	This time is waited for each pause input after the PSTN access code. If this address contains FF[H], the pause time stored in address 68054F is used. Do not set a number more than 7 in the UK.
68055E	Progress tone detection level, and cadence detection enable flags	Bit 7: 0, Bit 6: 0, Bit 5: 0 = -25.0 dBm Bit 7: 0, Bit 6: 0, Bit 5: 1 = -35.0 dBm Bit 7: 0, Bit 6: 1, Bit 5: 0 = -30.0 dBm Bit 7: 1, Bit 6: 0, Bit 5: 0 = -40.0 dBm Bit 7: 1, Bit 6: 1, Bit 5: 0 = -49.0 dBm Bits 2, 0 - See Note 2.	
68055F To 680564	**Not used**	-	Do not change the settings.
680565	Long distance call prefix (HIGH)	BCD	For a code of 0: 680565 – FF 680566 - FF
680566	Long distance call prefix (LOW)	BCD	

WWW.SERVICE-MANUAL.NET

NCU Parameters

Address	Function	Unit	Remarks
680567 to 680571	**Not used**	-	Do not change the settings.
680572	Acceptable ringing signal frequency: range 1, upper limit	1000/ N (Hz).	SP2-103-003 (parameter 02).
680573	Acceptable ringing signal frequency: range 1, lower limit		SP2-103-004 (parameter 03).
680574	Acceptable ringing signal frequency: range 2, upper limit		SP2-103-005 (parameter 04).
680575	Acceptable ringing signal frequency: range 2, lower limit		SP2-103-006 (parameter 05).
680576	Number of rings until a call is detected	1	SP2-103-007 (parameter 06). The setting must not be zero.
680577	Minimum required length of the first ring	20 ms	See Note 4. SP2-103-008 (parameter 07).
680578	Minimum required length of the second and subsequent rings	20 ms	SP2-103-009 (parameter 08).
680579	Ringing signal detection reset time (LOW)	20 ms	SP2-103-010 (parameter 09).
68057A	Ringing signal detection reset time (HIGH)		SP2-103-011 (parameter 10).
68057B to 680580	**Not used**	-	Do not change the settings.
680581	Interval between dialing the last	20 ms	Factory setting: 500 ms

WWW.SERVICE-MANUAL.NET

Address	Function	Unit	Remarks
	digit and switching the Oh relay over to the external telephone when dialing from the operation panel in handset mode.		
680582	Bits 0 and 1 - Handset off-hook detection time Bit 1:0, Bit 0: 0 = 200 ms Bit 1:0, Bit 0: 1 = 800 ms Other Not used Bits 2 and 3 - Handset on-hook detection time Bit 3: 0, Bit 2: 0 = 200 ms Bit 3: 0, Bit 2: 1 = 800 ms Other Not used Bits 4 to 7 - **Not used**		-
680583 To 6805A0	**Not used**	-	Do not change the settings.
6805A1	Acceptable CED detection frequency upper limit (high byte)	BCD (Hz)	If both addresses contain FF(H), tone detection is disabled.
6805A2	Acceptable CED detection frequency upper limit (low byte)		
6805A3	Acceptable CED detection frequency lower limit (high byte)	BCD (Hz)	If both addresses contain FF(H), tone detection is disabled.
6805A4	Acceptable CED detection frequency lower limit (low byte)		
6805A5	CED detection time	20 ms ± 20 ms	Factory setting: 200 ms
6805A6	Acceptable CNG detection frequency upper limit (high byte)	BCD (Hz)	If both addresses contain FF(H), tone detection is disabled.
6805A7	Acceptable CNG detection		

WWW.SERVICE-MANUAL.NET

NCU Parameters

Address	Function	Unit	Remarks
	frequency upper limit (low byte)		
6805A8	Acceptable CNG detection frequency lower limit (high byte)	BCD (Hz)	If both addresses contain FF(H), tone detection is disabled.
6805A9	Acceptable CNG detection frequency lower limit (low byte)		
6805AA	**Not used**	-	Do not change the setting.
6805AB	CNG on time	20 ms	Factory setting: 500 ms
6805AC	CNG off time	20 ms	Factory setting: 3000 ms
6805AD	Number of CNG cycles required for detection	-	The data is coded in the same way as address 680533.
6805AE	**Not used**	-	Do not change the settings.
6805AF	Acceptable AI short protocol tone (800Hz) detection frequency upper limit (high byte)	Hz (BCD)	If both addresses contain FF(H), tone detection is disabled.
6805B0	Acceptable AI short protocol tone (800Hz) detection frequency upper limit (low byte)		
6805B1	Acceptable AI short protocol tone (800Hz) detection frequency lower limit (high byte)	Hz(BCD)	If both addresses contain FF(H), tone detection is disabled.
6805B2	Acceptable AI short protocol tone (800Hz) detection frequency lower limit (low byte)		
6805B3	Detection time for 800 Hz AI short protocol tone	20 ms	Factory setting: 360 ms

WWW.SERVICE-MANUAL.NET

Address	Function	Unit	Remarks
6805B4	PSTN: Tx level from the modem	-N – 3 dBm	SP2-103-002 (parameter 01).
6805B5	PSTN: 1100 Hz tone transmission level	- N 6805B4 - 0.5N 6805B5 –3.5 (dB) See Note 7.	
6805B6	PSTN: 2100 Hz tone transmission level	- N6805B4 - 0.5N 6805B6 –3 (dB) See Note 7.	
6805B7	PABX: Tx level from the modem	- dBm	
6805B8	PABX: 1100 Hz tone transmission level	- N 6805B7 - 0.5N 6805B8 (dB)	
6805B9	PABX: 2100 Hz tone transmission level	- N 6805B7 - 0.5N 6805B9 (dB)	
6805BD	Modem turn-on level (incoming signal detection level)	-37-0.5N (dBm)	
6805BE to 6805C6	**Not used**	-	Do not change the settings.
6805C7	Bits 0 to 3 – **Not used** Bit 4 = V.34 protocol dump 0: Simple, 1: Detailed (default) Bits 5 to 7 – **Not used.**		
6805C8 to 6805D9	**Not used**	-	Do not change the settings.
6805DA	T.30 T1 timer	1 s	
6805E0 bit 3	Maximum wait time for post message	0: 12 s 1: 30 s	1: Maximum wait time for post message (EOP/EOM/MPS) can be changed to 30 s. Change this bit to “1” if

WWW.SERVICE-MANUAL.NET

NCU Parameters

Address	Function	Unit	Remarks
			communication errors occur frequently during V.17 reception.
6805E3	Voltage setting to detect off-hook for voltage/DP detection for an externally connected line.	0: Auto 1: Fixed V	Do not change these settings

Here is a summary of the fixed voltage settings (1: Fixed) for an externally connected line.

Bit 7	Bit 6	Bit 5	Bit 4	-
0	0	0	0	**Not used**
0	0	0	1	2.75 V
0	0	1	0	5.5 V
1	0	0	0	22 V
1	1	1	1	41.25 V

6805E4	Bit 1 sets the level of the call signal, Bit 3 sets the call signal impedance	Bit 1	0	RT=0 (Low)	-
			1	RT=1 (High)	
		Bit 3	0	RZ=0 (High)	
			1	RZ=1 (Composite)	
6805E5	Bit 0 sets the ring detection method, Bit 1 sets the ring detection method when fixed.	Bit 0	0	Auto	If any setting is changed, select a setting that is higher than the default setting.
			1	Fixed	
		Bit 1	0	Use RDTP	
			1	Use RDTN	
	Here is a summary of the voltages for the detection of off-hook for DP detection.				

WWW.SERVICE-MANUAL.NET

Address	Function				Unit	Remarks
	Bit 7	Bit 6	Bit 5	Bit 4	-	
	0	0	0	0	**Not used**	
	0	0	0	1	2.75 V	
	0	0	1	0	5.5 V	
	1	0	0	0	22 V	
	1	1	1	1	41.25 V	

NOTES

1. If a setting is not required, store FF in the address.
2. Italy and Belgium only

   RAM address 68055E: the lower four bits have the following meaning.

   Bit 2 - 1: International dial tone cadence detection enabled (Belgium)

   Bit 1 - Not used

   Bit 0 - 1: PSTN dial tone cadence detection enabled (Italy)

   If bit 0 or bit 2 is set to 1, the functions of the following RAM addresses are changed.

   680508 (if bit 0 = 1) or 680538 (if bit 2 = 1): tolerance for on or off state duration (%), and number of cycles required for detection, coded as in address 680533.

   68050B (if bit 0 = 1) or 68053B (if bit 2 = 1): on time, hex code (unit = 20 ms)

   68050C (if bit 0 = 1) or 68053C (if bit 2 = 1): off time, hex code (unit = 20 ms)
3. Pulse dial parameters (addresses 68054A to 68054F) are the values for 10 pps. If 20 pps is used, the machine automatically compensates.
4. The first ring may not be detected until 1 to 2.5 wavelengths after the time specified by this parameter.
5. The calculated level must be between 0 and 10.

   The attenuation levels calculated from RAM data are:

   High frequency tone:

   - $-0.5 \times N_{680552}/_{680554} - 3.5$ dBm
   - $-0.5 \times N_{680555}$ dBm

   Low frequency tone:

WWW.SERVICE-MANUAL.NET

NCU Parameters

- – 0.5 x ($N_{680552/680554}$ + N_{680553}) –3.5 dBm
- – 0.5 x (N_{680555} + N_{680553}) dBm

Note

- N_{680552}, for example, means the value stored in address 680552(H)

6. 68054A: Europe - Between Ds opening and Di opening, France - Between Ds closing and Di opening
   68054D: Europe - Between Ds closing and Di closing, France - Between Ds opening and Di closing
7. Tone signals which frequency is lower than 1500Hz (e.g., 800Hz tone for AI short protocol) refer to the setting at 6805B5h. Tones which frequency is higher than 1500Hz refer to the setting at 6805B6h.
8. 68054A, 68054D, 68054E: The actual inter-digit pause (pulse dial mode) is the sum of the period specified by the RAM addresses 68054A, 68054D, and 68054E.

WWW.SERVICE-MANUAL.NET

4.5 DEDICATED TRANSMISSION PARAMETERS

There are two sets of transmission parameters: Fax and E-mail
Each Quick Dial Key and Speed Dial Code has eight bytes of programmable parameters allocated to it. If transmissions to a particular machine often experience problems, store that terminal's fax number as a Quick Dial or Speed Dial, and adjust the parameters allocated to that number.
The programming procedure will be explained first. Then, the eight bytes will be described.

4.5.1 PROGRAMMING PROCEDURE

1. Set the bit 0 of System Bit Switch 00 to 1.
2. Enter Address Book Management mode ([User Tools]> System Settings> Key Operator> Address Book Management).
3. Select the address book that you want to program.
4. For the fax parameter, select "Fax Dest.", for the E-mail parameter, select "E-mail", then press "Start". Make sure that the LED of the Start button lights green.
5. The settings for the switch 00 are now displayed. Press the bit number that you wish to change.
6. To scroll through the parameter switches, either:
7. Select the next switch: press "Next" or Select the previous switch: "Prev." until the correct switch is displayed. Then go back to step 6.
8. After the setting is changed, press "OK".
9. After finishing, reset bit 0 of System Bit Switch 00 to 0.

4.5.2 PARAMETERS

Fax Parameters

The initial settings of the following fax parameters are all FF(H) - all the parameters are disabled.

Switch 00
FUNCTION AND COMMENTS
ITU-T T1 time (for PSTN G3 mode) If the connection time to a particular terminal is longer than the NCU parameter setting,

WWW.SERVICE-MANUAL.NET

adjust this byte. The T1 time is the value stored in this byte (in hex code), multiplied by 1 second.

Range:

0 to 120 s (00h to 78h)

FFh - The local NCU parameter factory setting is used.

Do not program a value between 79h and FEh.

Switch 01

No	FUNCTION						COMMENTS
0-4	Tx level						If communication with a particular remote terminal often contains errors, the signal level may be inappropriate. Adjust the Tx level for communications with that terminal until the results are better. If the setting is “Disabled”, the NCU parameter 01 setting is used. Note ▪ Do not use settings other than listed on the left.
	Bit4	Bit3	Bit2	Bit1	Bit0		
	0	0	0	0	0	0	
	0	0	0	0	1	–1	
	0	0	0	1	0	–2	
	0	0	0	1	1	–3	
	0	0	1	0	0	–4	
	↓	↓	↓	↓	↓	↓	
	0	1	1	1	1	–15	
	1	1	1	1	1	Disabled	
5-7	Cable equalizer Bit 7: 0, Bit 6: 0, Bit 5: 0 = None Bit 7: 0, Bit 6: 0, Bit 5: 1 = Low Bit 7: 0, Bit 6: 1, Bit 5: 0 = Medium Bit 7: 0, Bit 6: 1, Bit 5: 1 = High Bit 7: 1, Bit 6: 1, Bit 5: 1 = Disabled						Use a higher setting if there is signal loss at higher frequencies because of the length of wire between the modem and the telephone exchange when calling the number stored in this Quick/Speed Dial. Also, try using the cable equalizer if one or more of the following symptoms occurs. Communication error with error

WWW.SERVICE-MANUAL.NET

		codes such as 0-20, 0-23, etc. Modem rate fallback occurs frequently. Note ▪ Do not use settings other than listed on the left. If the setting is “Disabled”, the bit switch setting is used.

Switch 02

No	FUNCTION					COMMENTS
0-3	Initial Tx modem rate					If training with a particular remote terminal always takes too long, the initial modem rate may be too high. Reduce the initial Tx modem rate using these bits. For the settings 14.4 or kbps slower, Switch 04 bit 4 must be changed to 0. Note ▪ Do not use settings other than listed on the left. If the setting is “Disabled”, the bit switch setting is used.
	Bit3	Bit2	Bit1	Bit0	bps	
	0	0	0	0	Not used	
	0	0	0	1	2400	
	0	0	1	0	4800	
	0	0	1	1	7200	
	0	1	0	0	9600	
	0	1	0	1	12000	
	0	1	1	0	14400	
	0	1	1	1	16800	
	1	0	0	0	19200	
	1	0	0	1	21600	
	1	0	1	0	24000	
	1	0	1	1	26400	
	1	1	0	0	28800	

WWW.SERVICE-MANUAL.NET

Dedicated Transmission Parameters

	1	1	0	1	31200	
	1	1	1	0	33600	
	1	1	1	1	Disabled	
	Other settings: **Not used**					
4-7	**Not used**					Do not change the settings.

Switch 03		
No	**FUNCTION**	**COMMENTS**
0-1	Inch-mm conversion before tx Bit 1: 0, Bit 0: 0 = Inch-mm conversion available Bit 1: 0, Bit 0: 1 = Inch only Bit 1: 1, Bit 0: 0 = Not used Bit 1: 1, Bit 0: 1 = Disabled	The machine uses inch-based resolutions for scanning. If “inch only” is selected, the printed copy may be slightly distorted at the other end if that machine uses mm-based resolutions. If the setting is “Disabled”, the bit switch setting is used.
2-3	DIS/NSF detection method Bit 3: 0, Bit 2: 0 = First DIS or NSF Bit 3: 0, Bit 2: 1 = Second DIS or NSF Bit 3: 1, Bit 2: 0 = Not used Bit 3: 1, Bit 2: 1 = Disabled	(0, 1): Use this setting if echoes on the line are interfering with the set-up protocol at the start of transmission. The machine will then wait for the second DIS or NSF before sending DCS or NSS. If the setting is “Disabled”, the bit switch setting is used.
4	V.8 protocol 0: Off 1: Disabled	If transmissions to a specific destination always end at a lower modem rate (14,400 bps or lower), disable V.8 protocol so as not to use V.34 protocol. 0: V.34 communication will not be possible. If the setting is “Disabled”, the bit switch setting is used.
5	Compression modes available in transmit mode	This bit determines the capabilities that are informed to the other terminal during transmission.

WWW.SERVICE-MANUAL.NET

	0: MH only 1: Disabled	If the setting is “Disabled”, the bit switch setting is used.
6-7	ECM during transmission Bit 7: 0, Bit 6: 0 = Off Bit 7: 0, Bit 6: 1 = On Bit 7: 1, Bit 6: 0 = Not used Bit 7: 1, Bit 6: 1 = Disabled	For example, if ECM is switched on but is not wanted when sending to a particular terminal, use the (0, 0) setting. Note ▪ V.8/V.34 protocol and JBIG compression are automatically disabled if ECM is disabled. ▪ If the setting is “Disabled”, the bit switch setting is used.

Switch 04 - Not used (do not change the settings)
Switch 05 - Not used (do not change the settings)
Switch 06 - Not used (do not change the settings)
Switch 07 - Not used (do not change the settings)
Switch 08 - Not used (do not change the settings)
Switch 09 - Not used (do not change the settings)

E-mail Parameters

The initial settings of the following e-mail parameters are all "0" (all parameters disabled).

Switch 00		
No	**FUNCTION**	**COMMENTS**
0	MH Compression mode for e-mail attachments **0**: Off 1: On	Switches MH compression on and off for files attached to e-mails for sending.
1	MR Compression mode	Switches MR compression on and off for files

WWW.SERVICE-MANUAL.NET

	for e-mail attachments **0**: Off 1: On	attached to e-mails for sending.
2	MMR Compression mode for e-mail attachments **0**: Off 1: On	Switches MMR compression on and off for files attached to e-mails for sending.
3-6	**Not used**	Do not change these settings.
7	Designates the bits to reference for compression method of e-mail attachments **0**: Registered (Bit 0 to 6) 1: No registration.	The "0" selection (default) references the settings for Bits 00, 01, 02 above. The "1" selection ignores the selections of Bits 00, 01, 02.

Switch 01		
No	**FUNCTION**	**COMMENTS**
0	Original width of e-mail attachment: A4 **0**: Off 1: On	Sets the original width of the e-mail attachment as A4.
1	Original width of e-mail attachment: B4 **0**: Off 1: On	Sets the original width of the e-mail attachment as B4.
2	Original width of e-mail attachment: A3 **0**: Off 1: On	Sets the original width of the e-mail attachment as A3.
3-6	**Not used**	Do not change these settings.

WWW.SERVICE-MANUAL.NET

7	Designates the bits to reference for original size of e-mail attachments **0**: Registered (Bit 0 to 6) 1: No registration.	The "0" selection (default) references the settings for Bits 00, 01, 02 above. The "1" selection ignores the selections of Bits 00, 01, 02.

Switch 02		
No	**FUNCTION**	**COMMENTS**
0	Line resolution of e-mail attachment: 200 x 100 **0**: Off 1: On	Sets the line resolution of the e-mail attachment as 200 x100.
1	Line resolution of e-mail attachment: 200 x 200 **0**: Off 1: On	Sets the line resolution of the e-mail attachment as 200 x 200.
2	Line resolution of e-mail attachment: 200 x 400 **0**: Off 1: On	Sets the line resolution of the e-mail attachment as 200 x 400.
3	Not used	Do not change these settings.
4	Line resolution of e-mail attachment: 400 x 400 **0**: Off 1: On	Sets the line resolution of the e-mail attachment as 400 x 400.
5-6	**Not used**	Do not change these settings.
7	Designates the bits to reference for original size of e-mail attachments **0**: Registered (Bit 0 to 6) 1: No registration.	The "0" selection (default) references the settings for Bits 00, 01, 02, 04 above. The "1" selection ignores the selections of Bits 00, 01, 02, 04.

WWW.SERVICE-MANUAL.NET

Switch 03 - Not used (do not change the settings)

Switch 04		
No	**FUNCTION**	**COMMENTS**
0	Full mode address selection 0: Full mode address 1: No full mode (simple mode)	If the other ends have the addresses, which have the full mode function flag ("0"), this machine determines them as full mode standard machines. ▪ This machine attaches the "demand of reception confirmation" to a message when transmitting. ▪ This machine updates the reception capability to the address book when receiving.
1-7	**Not used**	Do not change these settings.

Switch 05		
No	**FUNCTION**	**COMMENTS**
0	Directr transmission selection to SMTP server 0: ON 1: OFF	Allows or does not allow the direct transmission to SMTP server.
1-7	Not used	Do not change these settings.

Switch 06 - Not used (do not change the settings)
Switch 07 - Not used (do not change the settings)
Switch 08 - Not used (do not change the settings)
Switch 09 - Not used (do not change the settings)

WWW.SERVICE-MANUAL.NET

4.6 SERVICE RAM ADDRESSES

CAUTION

- Do not change the settings which are marked as “Not used” or “Read only.”

680001 to 680004(H) - ROM version (Read only)

680001(H) - Revision number (BCD)

680002(H) - Year (BCD)

680003(H) - Month (BCD)

680004(H) - Day (BCD)

680006 to 680015(H) - Machine’s serial number (16 digits - ASCII)

680018(H) - Total program checksum (low)

680019(H) - Total program checksum (high)

680020 to 68003F(H) - System bit switches

680050 to 68005F(H) - Printer bit switches

680060 to 68007F(H) - Communication bit switches

680080 to 68008F(H) - G3 bit switches

680090 to 68009F(H) - G3-2 bit switches: Not used

6800A0 to 6800AF(H) - G3-3 bit switches: Not used

6800D0(H) - User parameter switch 00 (SWUER_00) : Not used

6800D1(H) - User parameter switch 01 (SWUSR_01) : Not used

6800D2(H) - User parameter switch 02 (SWUSR_02)

Bit 0: Forwarding mark printing on forwarded messages 0: Disabled, 1: Enabled

Bit 1: Center mark printing on received copies

(This switch is not printed on the user parameter list.)

0: Disabled, 1: Enabled

Bit 2: Reception time printing

(This switch is not printed on the user parameter list.)

0: Disabled, 1: Enabled

Bit 3: TSI print on received messages 0: Disabled, 1: Enabled

Bit 4: Checkered mark printing

(This switch is not printed on the user parameter list.)

0: Disabled, 1: Enabled

Bit 5: Not used

Bit 6: Not used

Bit 7: Not used

WWW.SERVICE-MANUAL.NET

6800D3(H) - User parameter switch 03 (SWUSR_03: Automatic report printout)

Bit 0: Transmission result report (memory transmissions) 0: Off, 1: On

Bit 1: Not used

Bit 2: Memory storage report 0: Off, 1: On

Bit 3: Polling reserve report (polling reception) 0: Off, 1: On

Bit 4: Polling result report (polling reception) 0: Off, 1: On

Bit 5: Transmission result report (immediate transmissions) 0: Off, 1: On

Bit 6: Not used

Bit 7: Journal 0: Off, 1: On

6800D4(H) - User parameter switch 04 (SWUSR_04: Automatic report printout)

Bit 0: Not used

Bit 1: Automatic communication failure report and transfer result report output 0: Off, 1: On

Bits 2 to 3: Not used

Bit 4: Indicates the parties 0: Not indicated, 1: Indicated

Bit 5: Include sender's name on reports 0: Off, 1: On

Bit 6: Not used

Bit 7: Inclusion of a sample image on reports 0: Off, 1: On

6800D5(H) - User parameter switch 05 (SWUSR_05)

Bit 0: Substitute reception when the base copier is in an SC condition

0: Enabled, 1: Disabled

Bits 1 and 2: Condition for substitute rx when the machine cannot print messages (Paper end, toner end, jam, and during night mode)

Bit 2: 0, Bit 1: 0 = The machine receives all the fax messages.

Bit 2: 0, Bit 1: 1 = The machine receives the fax messages with RTI or CSI.

Bit 2: 1, Bit 1: 0 = The machine receives the fax messages with the same ID code.

Bit 2: 1, Bit 1: 1 = The machine does not receive anything.

Bit 3: Not used

Bit 4: Not used

Bit 5: Just size printing 0: Off, 1: On

Bit 6: Not used

Bit 7: Add paper display when a cassette is empty 0: Off, 1: On

6800D6(H) - User parameter switch 06 (SWUSR_06): Not used

6800D7(H) - User parameter switch 07 (SWUSR_07)

Bit 0 Ringing 0: Off, 1: On

Bit1: Automatic answering message 0: Off, 1: On

Bit 2: Parallel memory transmission 0: Off, 1: On

WWW.SERVICE-MANUAL.NET

Bits 3 and 4: Not used

Bit 5: Remote control 0: Off, 1: On

Bits 6 and 7: Not used

6800D8(H) - User parameter switch 08 (SWUSR_08)

Bits 0 and 1: Not used.

Bit 2: Authorized reception

0: Only faxes from senders whose RTIs/CSIs are specified for this feature are accepted.

1: Only faxes from senders whose RTIs/CSIs are not specified for this feature are accepted.

Bits 3 to 7: Not used.

6800D9(H) - User parameter switch 09 (SWUSR_09): Not used

6800DA(H) - User parameter switch 10 (SWUSR_0A)

Bits 0 to 2: Not used

Bit 3: Page reduction 0: Off, 1: On

Bits 4 and 5: Not used

Bit 6: Use both e-mail notification and printed reports to confirm the transmission results 0: Off, 1: On

Bit 7: Not used

6800DB(H) - User parameter switch 11 (SWUSR_0B)

Bits 0 and 1: Not used

Bit 2: White original detection 0: Off, 1: On (alarm and alert message on the LCD)

Bit 3: Receive rejection for 1300 Hz transmission 0: Off (receive), 1: On (not receive)

Bit 5: Not used

Bit 6: Printout of messages received while acting as a forwarding station 0: Off, 1: On

Bit 7: Not used

6800DC(H) - User parameter switch 12 (SWUSR_0C): Not used

6800DD(H) - User parameter switch 13 (SWUSR_0D): Not used

6800DE(H) - User parameter switch 14 (SWUSR_0E)

Bit 0: Message printout while the machine is in Night Printing mode 0: On, 1: Off

Bit 1: Maximum document length detection 0: Double letter, 1: Longer than double-letter (well log) – up to 1,200 mm

Bit 2: Not used

Bit 3: Fax mode settings, such as resolution, before a mode key (Copy/Fax/Printer/Scanner) is pressed 0: Not cleared, 1: Cleared

Bits 4 to 6: Not used

Bit 7: Not used

WWW.SERVICE-MANUAL.NET

6800DF(H) - User parameter switch 15 (SWUSR_0F)

(This switch is not printed on the user parameter list.)

Bits 0, 1 and 2: Cassette for fax printout

Bit 2: 0, Bit 1: 0, Bit 0: 1 = 1st paper feed station

Bit 2: 0, Bit 1: 1, Bit 0: 0 = 2nd paper feed station

Bit 2: 0, Bit 1: 1, Bit 0: 1 = 3rd paper feed station

Bit 2: 1, Bit 1: 0, Bit 0: 0 = 4th paper feed station

Bit 2: 1, Bit 1: 0, Bit 0: 1 = LCT

Other settings Not used

Bits 3 and 4: Not used

Bit 5: Using the cassette specified by bits 0, 1 and 2 above only 0: On, 1: Off

Bits 6 and 7: Not used

6800E0(H) – User parameter switch 16 (SWUSR_10)

(This switch is not printed on the user parameter list.)

Bits 0 and 1: Not used

Bit 2: Paper size selection priority for an A4 size fax message when A4/LT size paper is not available. 0: A3 has priority, 1: B4 has priority

Bits 3 to 7: Not used

6800E1(H) – User parameter switch 17 (SWUSR_11)

Bit 0: Not used

⇒ Bit 1: Disable Broadcasting: To avoid accidentally specifying multiple destinations, users can disable broadcasting. They cannot specify group destinations if they disable broadcasting. They can specify only one address at a time. 1: On, 0: Off

Bit 2: Inclusion of the “Add” button when a sequence of Quick/Speed dials is selected for broadcasting 0:Not needed, 1: Needed

Bits 3, 5 and 6: Not used

⇒ Bit 4: Display Destination Prior to transmission: To prevent documents being sent to the wrong destination, users can configure the machine to display the destination again after it has been entered and before the file is sent. 1: On, 0: Off

Bit 7: Press “Start” key without an original when using the on hook dial or external phone, 0: displays “Cannot detect original size”. 1: Receives fax messages.

6800E2(H) - User parameter switch 18 (SWUSR_12)

Bit 0: TTI date 0: Off, 1: On

Bit 1: TTI sender 0: Off, 1: On

Bit 2: TTI file number 0: Off, 1: On

Bit 3: TTI page number 0: Off, 1: On

Bits 4 to 6: Not used

Bit 7: Japan only

WWW.SERVICE-MANUAL.NET

6800E3(H) - User parameter switch 19 (SWUSR_13):

Bit 0: Not used

Bit 1: Journal format

0: The Journal is separated into transmissions and receptions

1: The Journal is separated into G3-1, G3-2, and G3-3 communications

Bit 2: Not used

Bit 3: 90° image rotation during B5 portrait Tx (This switch is not printed on the user parameter list.) 0: Off, 1: On

Bit 4: Reduction of sample images on reports to 50% in the main scan and sub-scan directions. (This switch is not printed on the user parameter list.) 0: Technician adjustment (printer switch 0E bits 3 and 4), 1: 50% reduction

Bit 5: Use of A5 size paper for reports (This switch is not printed on the user parameter list.) 0: Off, 1: On

Bits 6 and 7: Not used

6800E4(H) - User parameter switch 20 (SWUSR_14)

Bit 0: Automatic printing of the LAN fax result report 0: Off, 1: On

Bit 1: Not used.

Bits 2 to 5: Store documents in memory which could not be printed from PC fax (LAN fax) driver

Bit 5	Bit 4	Bit 3	Bit 2	Setting
0	0	0	0	0 min.
0	0	0	1	1 min.
↓	↓	↓	↓	↓
1	1	1	0	14 min.
1	1	1	1	15 min.

Bits 6 and 7: Not used.

6800E5(H) - User parameter switch 21 (SWUSR_15)

Bit 0: Print results of sending reception notice request message 0: Disabled (print only when error occurs), 1: Enabled

Bit 1: Respond to e-mail reception acknowledgment request 0: Disabled, 1: Enabled

Bit 2: Not used

Bit 3: File format for forwarded folders and E-Mail 0: TIFF, 1:PDF

Bit 4: Transmit Journal by E-mail 0: Disabled, 1: Enabled

WWW.SERVICE-MANUAL.NET

Bit 5: Not used

Bit 6: Network error display 0: Displayed, 1: Not displayed

Bit 7: Transmit error mail notification 0: Enabled, 1: Disabled

6800E6(H) - User parameter switch 22 (SWUSR_16)
(This switch is not printed on the user parameter list.)

Bit 0: Dial tone detection (PSTN 1) 0: Disabled, 1: Enabled

Bits 1 to 3: Not used

Reentered Count				
7	6	5	4	Count
0	0	0	0	0
0	0	0	1	1
0	0	1	0	2
				⋮
1	1	1	1	15

⇒ Bits 4 to 7: Re-enter Fax number to confirm destination (0 -15) (Default: 0000) (See ***Reentered Count*** chart) Enter the fax number again to confirm the destination is correct. Tx is disabled if the confirmation fax number does not match the first fax number. This function prevents faxes from being sent to the incorrect destination.

6800E7(H) – User parameter switch 23 (SWUSR_17): Not used

6800E8(H) - User parameter switch 24 (SWUSR_18): Not used

6800E9(H) - User parameter switch 25 (SWUSR_19)

Bit 0: Not used

Bit 1: Reception mode switch timer 0: Off, 1: On (switching Fax or Fax/Tel)

Bit 2: Mode priority switch 0: Fax first, 1: Tel first

Bit 3: Dial in function (Japan Only)

Bit 4: RDS operation 0: Not acceptable, 1: Acceptable for the limit specified by system switch 03

Note

- This bit is only effective when RDS operation can be selected by the user (see system switch 02).

Bits 5 to 7: Not used

6800EA(H) - 6800EB(H) - User parameter switches 26 - 27 (SWUSR_1A - 1B): Not used

6800EC(H) - User parameter switch 28(SWUSR_1C)

Xxxxx

6800ED(H) - User parameter switch 29(SWUSR_1D)

xxxxxx

6800EE(H) and 6800EF(H) - User parameter switches 30 and 31 (SWUSR_1E and 1F): Not used

6800F0(H) - User parameter switch 32 (SWUSR_20)

Bit 0: Quotation priority for a destination when there is no destination of the specified type

0: Paper output priority = Priority order: 1. IP-fax destination, 2. Fax Number, 3. E-mail address, 4. Folder

1: Electric putout order = Priority order: 1. E-mail address, 2. Folder, 3. IP-fax destination, 4. Fax number

Bits 1 to 7: Not used

6800F1(H) - User parameter switch 33 (SWUSR_21): Not used

WWW.SERVICE-MANUAL.NET

6800F2(H) - User parameter switch 34 (SWUSR_22)

Bit 0: Gatekeeper server used with IP-Fax 0: Disabled, 1: Enabled

Bit 1: SIP server used with IP-Fax 0: Disabled, 1: Enabled

Bits 2 to 7: Not used

680100 to 68010F(H) - G4 Parameter Switches – Not used

680110 to 68012F(H) - G4 Internal Switches – Not used

680130 to 68016F(H) - Service Switches

680170 to 68017F(H) - IFAX Switches

680180 to 68018F(H) - IP-FAX Switches

680190 to 6801AF(H) - Service station's fax number (SP3-101)

6801B0 to 6801B9(H) - Own fax PABX extension number

6801BA to 6801C3(H) - Own fax number (PSTN) – Not used

6801C4 to 6801D7(H) - Own fax number (ISDN G4) – Not used

6801D8 to 6801E3(H) - The first subscriber number (ISDN G3) – Not used

6801E4 to 6801EF(H) - The second subscriber number (ISDN G3) – Not used

6801F0 to 6801FB(H) - The first subscriber number (ISDN G4) – Not used

6801FC to 680207(H) - The second subscriber number (ISDN G4) – Not used

680208 to 68021B(H) - PSTN-1 RTI (Max. 20 characters - ASCII) - See the following note.

68021C to 68022F(H) - PSTN-2 RTI (Max. 20 characters - ASCII) - Not used

680230 to 680246(H) - PSTN-3 RTI (Max. 20 characters - ASCII) - Not used

680247 to 680286(H) - TTI 1 (Max. 64 characters - ASCII) - See the following note.

680287 to 6802C6(H) - TTI 2 (Max. 64 characters - ASCII) - Not used

6802C7 to 680306(H) - TTI 3 (Max. 64 characters - ASCII) - Not used

680307 to 68031A(H) - PSTN-1 CSI (Max. 20 characters - ASCII)

68031B to 68032E(H) - PSTN-2 CSI (Max.20 characters - ASCII) - Not used

68032F to 680342(H) - PSTN-3 CSI (Max.20 characters - ASCII) - Not used

680343(H) - Number of PSTN-1 CSI characters (Hex)

680344(H) - Number of PSTN-2 CSI characters (Hex) - Not used

680345(H) Number of PSTN-3 CSI characters (Hex) - Not used

Note

- If the number of characters is less than the maximum (20 for RTI, 32 for TTI), add a stop code (00[H]) after the last character.

680380 to 680387(H) - Last power off time (Read only)

680380(H) - 01(H) - 24-hour clock, 00(H) - 12-hour clock (AM), 02(H) - 12-hour clock (PM)

680381(H) - Year (BCD)

680382(H) - Month (BCD)

WWW.SERVICE-MANUAL.NET

Service RAM Addresses

680383(H) - Day (BCD)

680384(H) – Hour

680385(H) – Minute

680386(H) – Second

680387(H) - 00: Monday, 01: Tuesday, 02: Wednesday, /// , 06: Sunday

680394(H) - Optional equipment (Read only – Do not change the settings)

Bit 0: Page Memory 0: Not installed, 1: Installed

Bit 1: SAF Memory 0: Not installed, 1: Installed

Bits 2 to 7; Not used

680395(H) - Optional equipment (Read only – Do not change the settings)

Bits 0 to 3: Not used

Bit 4: G3-2 0: Not installed, 1: Installed

Bit 5: G3-3 0: Not installed, 1: Installed

Bit 6 and 7: Not used

680406 to 68040A – Option G3 board (G3-2) ROM information (Read only)

680406(H) - Suffix (BCD)

680407(H) - Version (BCD)

680408(H) - Year (BCD)

680409(H) - Month (BCD)

68040A(H) - Day (BCD)

68040B to 68040F – Option G3 board (G3-3) ROM information (Read only)

68040B(H) - Suffix (BCD)

68040C(H) - Version (BCD)

68040D(H) - Year (BCD)

68040E(H) - Month (BCD)

68040F(H) - Day (BCD)

680410(H) - G3-1 Modem ROM version (Read only)

680412(H) - G3-2 Modem ROM version (Read only)

680414(H) - G3-3 Modem ROM version (Read only)

680420(H) - Number of multiple sets print (Read only)

680476(H) - Time for economy transmission (hour in 24h clock format - BCD)

680477(H) - Time for economy transmission (minute - BCD)

680492(H) - Transmission monitor volume 00 - 07(H)

680493(H) - Reception monitor volume 00 - 07(H)

680494(H) - On-hook monitor volume 00 - 07(H)

680495(H) - Dialing monitor volume 00 - 07(H)

WWW.SERVICE-MANUAL.NET

680496(H) - Buzzer volume 00 - 07(H)

680497(H) - Beeper volume 00 - 07(H)

6804A8(H) - Machine code (Check ram 4)

68918E(H) - Gatekeeper server address - Main (Max. 128 characters - ASCII)

68920E(H) - Gatekeeper server address - Sub (Max. 128 characters - ASCII)

68928E(H) - Arias Number (Max. 128 characters - ASCII)

68930E(H) - SIP user name (Max. 128 characters - ASCII)

68938E(H) - SIP digest authentication password (Max. 128 characters - ASCII)

68940E(H) - Gateway address information (Max. 7100 characters - ASCII)

68AFCA(H) - Stand-by port number for H.232 connection

68AFCCH) - Stand-by port number for SIP connection

68AFCE(H) - RAS port number

68AFD0(H) - Gatekeeper port number

68AFD2(H) - Port number of data waiting for T.38

68AFD4(H) - Port number of SIP server

68AFD6(H) - Priority for SIP and H.323 0: H.323, 1: SIP

68AFD7(H) - SIP function 0: Disabled, 1: Enabled

68AFD8(H) - H.323 function 0: Disabled, 1: Enabled

68AFD9(H) - SIP digest authentication function 0: Disabled, 1: Enabled

68AFDA(H) - IP-Fax backup data 00 - 600 (H) - Not used

69ED6A(H) to 69ED92(H) - SIP server address (Read only)

69ED6A(H) - Proxy server - Main (Max. 128 characters - ASCII)

69ED72(H) - Proxy server - Sub (Max. 128 characters - ASCII)

69ED7A(H) - Redirect server - Main (Max. 128 characters - ASCII)

69ED82(H) - Redirect server - Sub (Max. 128 characters - ASCII)

69ED8A(H) - Registrar server - Main (Max. 128 characters - ASCII)

69ED92(H) - Registrar server - Sub (Max. 128 characters - ASCII)

6BEBFE(H) - 6BEC1E (H) - Dial tone detection parameter (Max. 11 x 3 lines)

This initializes following order. [0x04, 0x40, 0x03, 0x60, 0x64, 0xf4, 0x01,0x64, 0x04, 0xc8, 0x00]

6BEBFE(H) – Dial tone detection frequency – Upper limit (High)

Defaults: NA: 06, EU: 06, ASIA: 06

6BEBFF(H) – Dial tone detection frequency – Upper Limit (Low)

Defaults: NA: 50, EU: 50, ASIA: 50

6BEC00(H) – Dial tone detection frequency – Lower Limit (High)

Defaults: NA: 03, EU: 02, ASIA: 02

WWW.SERVICE-MANUAL.NET

Service RAM Addresses

6BEC01(H) – Dial tone detection frequency – Lower Limit (Low)

Defaults: NA: 60, EU: 90, ASIA: 90

6BEC02(H) –Dial tone detection waiting time (20 ms)

Defaults: NA: 64, EU 64, ASIA: 64

6BEC03 to 6BEC04 – Dial tone detection monitoring time (20 ms)

Defaults

Area	6BEC03	6BEC04
NA	F4	01
EU	F4	01
ASIA	F4	01

6BEC05(H) – Dial tone detect judge time (20 ms)

Defaults: NA: 64, EU: 1B, ASIA: 32

6BEC06(H) – Dial tone disconnect permission time (20 ms)

Defaults: NA: 11, EU: 0F, ASIA: 11

WWW.SERVICE-MANUAL.NET

5. SPECIFICATIONS

5.1 GENERAL SPECIFICATIONS

5.1.1 FCU

Type:	Desktop type transceiver
Circuit:	PSTN (max. 3ch.) PABX
Connection:	Direct couple
Original Size:	Book (Face down) Maximum Length: 432 mm [17 ins] Maximum Width: 297 mm [11.7 ins] ARDF (Face up) (Single-sided document) Length: 128 - 1200 mm [5.0 - 47.2 ins] Width: 105 - 297 mm [4.1 - 11.7 inch] (Double-sided document) Length: 128 - 432 mm [5.0 - 17 inch] Width: 105 - 297 mm [4.1 - 11.7 inch]
Scanning Method:	Flat bed, with CCD
Resolution:	G3 8 x 3.85 lines/mm (Standard) 8 x 7.7 lines/mm (Detail) 8 x 15.4 line/mm (Fine) See Note1 16 x15.4 line/mm (Super Fine) See Note 1 200 x 100 dpi (Standard) 200 x 200 dpi (Detail) 400 x 400 dpi (Super Fine) See Note 1 Note ▪ Optional Expansion Memory required

WWW.SERVICE-MANUAL.NET

General Specifications

Transmission Time:	G3: 3 s at 28800 bps; Measured with G3 ECM using memory for an ITU-T #1 test document (Slerexe letter) at standard resolution
Data Compression:	MH, MR, MMR, JBIG
Protocol:	Group 3 with ECM
Modulation:	V.34, V.33, V.17 (TCM), V.29 (QAM), V.27ter (PHM), V.8, V.21 (FM)
Data Rate:	G3: 33600/31200/28800/26400/24000/21600/ 19200/16800/14400/12000/9600/7200/4800/2400 bps Automatic fallback
I/O Rate:	With ECM: 0 ms/line Without ECM: 2.5, 5, 10, 20, or 40 ms/line
Memory Capacity:	ECM: 128 KB SAF Standard: 4 MB With optional Expansion Memory: 28 MB (4 MB+ 24 MB) Page Memory Standard: 4 MB (Print: 2 MB + Scanner: 2 MB) With optional Expansion Memory: 12 MB (4 MB + 8 MB) (Print 8 MB + Scanner: 4 MB)

WWW.SERVICE-MANUAL.NET

5.1.2 CAPABILITIES OF PROGRAMMABLE ITEMS

The following table shows the capabilities of each programmable items.

Item	Standard
Quick Dial	2000
Groups	100
Destination per Group	500
Destinations dialed from the ten-key pad overall	500
Programs	100
Auto Document	6
Communication records for Journal stored in the memory	200
Specific Senders	30

The following table shows how the capabilities of the document memory will change after the Expansion Memory are installed.

WWW.SERVICE-MANUAL.NET

General Specifications

	Without the Expansion Memory	With the Expansion Memory
Memory Transmission file	400	400
Maximum number of page for memory transmission	1000	1000
Memory capacity for memory transmission (Note1)	320	2240

Note

- Measured using an ITU-T #1 test document (Slerexe letter) at the standard resolution, the auto image density mode and the Text mode.

WWW.SERVICE-MANUAL.NET

5.2 IFAX SPECIFICATIONS

Connectivity:	Local area network Ethernet 100base-Tx/10base-T IEEE802.11a/g, g (wireless LAN), 1000 Base-T
Resolution:	Main scan: 400 dpi, 200 dpi Sub scan: 400 dpi, 200 dpi, 100 dpi Note ▪ To use 400 dpi, IFAX SW01 Bit 4 must be set to “1”.
Transmission Time:	1 s (through a LAN to the server) Condition: ITU-T #1 test document (Selerexe Letter) MTF correction: OFF TTI: None Resolution: 200 x 100 dpi Communication speed: 10 Mbps Correspondent device: E-mail server Line conditions: No terminal access
Document Size:	Maximum message width is A4/LT. Note ▪ To use B4 and A3 width, IFAX SW00 Bit 1 (B4) and/or Bit 2 (A3) must be set to “1”.
E-mail File Format:	Single/multi-part MIME conversion Image: TIFF-F (MH, MR, MMR)
Protocol:	**Transmission:** SMTP, TCP/IP **Reception:** POP3, SMTP, IMAP4, TCP/IP
Data Rate:	100 Mbps(100base-Tx) 10 Mbps (10base-T)

WWW.SERVICE-MANUAL.NET

IFAX Specifications

Authentication Method:	SMTP-AUTH POP before SMTP A-POP
Remark:	The machine must be set up as an e-mail client before installation. Any client PCs connected to the machine through a LAN must also be e-mail clients, or some features will not work (e.g. Autorouting).

WWW.SERVICE-MANUAL.NET

5.3 IP-FAX SPECIFICATIONS

Network:	Local Area Network Ethernet/10base-T, 100base-TX IEEE802.11a/g, g (wireless LAN), 1000 Base-T
Scan line density:	8 x 3.85 lines/mm, 200x100dpi (standard character), 8 x 7.7lines/mm, 200x200dpi (detail character), 8 x 15.4lines/mm (fine character: optional expansion memory required), 16 x 15.4lines/mm, 400x400dpi (super fine character: optional expansion memory required)
Original size:	Maximum A3 or 11"x 17" (DLT)
Maximum scanning size:	Standard: A3, 297mm x 432mm Irregular: 297mm x 1200mm
Transmission protocol:	Recommended: T.38 Annex protocol, TCP, UDP/IP communication
Compatible machines:	IP-Fax compatible machines
IP-Fax transmission function:	Specify IP address and send fax to an IP-Fax compatible fax through a network. Also capable of sending fax from a G3 fax connected to the public telephone lines via a VoIP gateway.
IP-Fax reception function:	Receive a fax sent from an IP-Fax compatible fax through a network. Also capable of receiving fax from a G3 fax connected the public telephone lines via a VoIP gateway.

WWW.SERVICE-MANUAL.NET

5.4 FAX UNIT CONFIGURATION

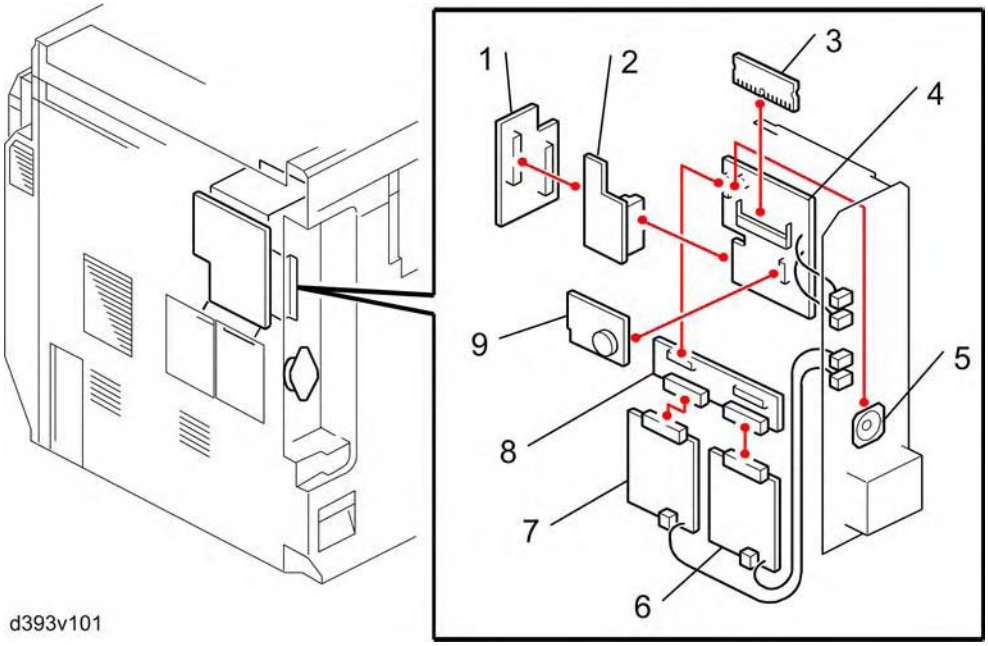

Component	Code	No.	Remarks
MBU	D393	9	Included with the fax unit
FCU		4	
FCU I/F		2	
GWFCU I/F		1	
Speaker		5	
Expansion Memory	G578	3	Optional
CCU I/F Board	D393	8	Optional
SG3 Board		6	
SG3 Board (2nd)	D393	7	Optional
Handset Type 1018	B433	-	NA only. Also used with J-C2

WWW.SERVICE-MANUAL.NET

D536

1 BIN TRAY BN3080

REVISION HISTORY		
Page	**Date**	**Added/Updated/New**
		None

WWW.SERVICE-MANUAL.NET

WWW.SERVICE-MANUAL.NET

1 BIN TRAY BN3080 (D536)

TABLE OF CONTENTS

1. REPLACEMENT AND ADJUSTMENT..... 1
1.1 ELECTRICAL COMPONENTS.....1
1.1.1 PAPER SENSOR 1
1.1.2 1-BIN CONTROL BOARD 2

WWW.SERVICE-MANUAL.NET

WWW.SERVICE-MANUAL.NET

1. REPLACEMENT AND ADJUSTMENT

1.1 ELECTRICAL COMPONENTS

1.1.1 PAPER SENSOR

1. Open the right door of the machine.

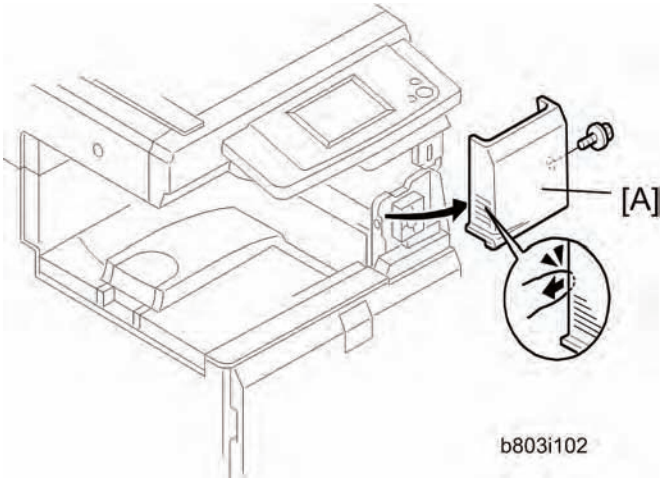

2. Remove the front right cover [A] (x 1).

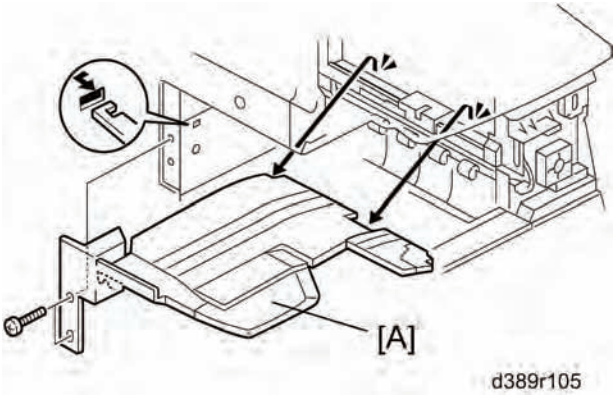

3. 1-bin-tray [B] (x 2; M3 x 16)

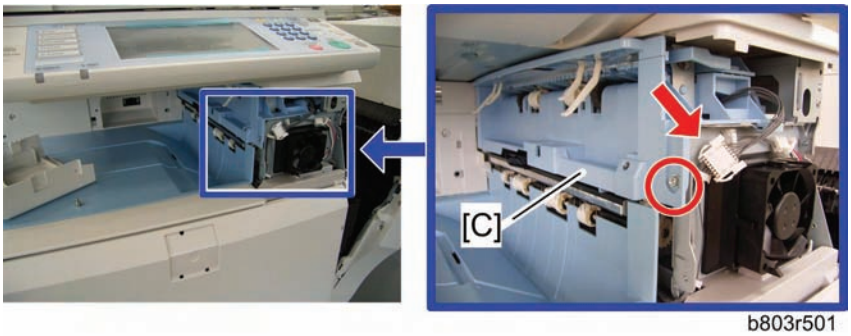

4. 1-bin sorter unit [C]

WWW.SERVICE-MANUAL.NET

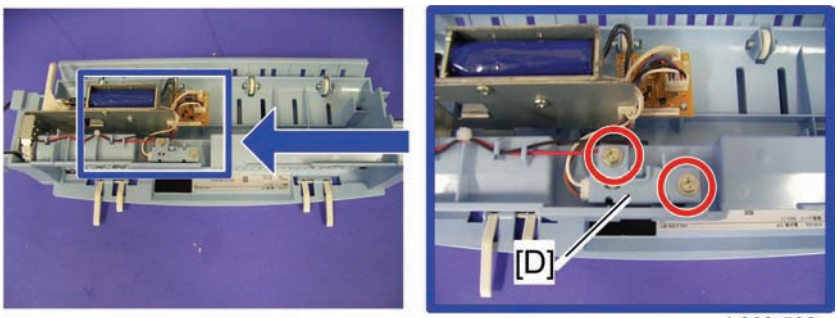

b803r502

5. Paper sensor cover [D] (x 2)

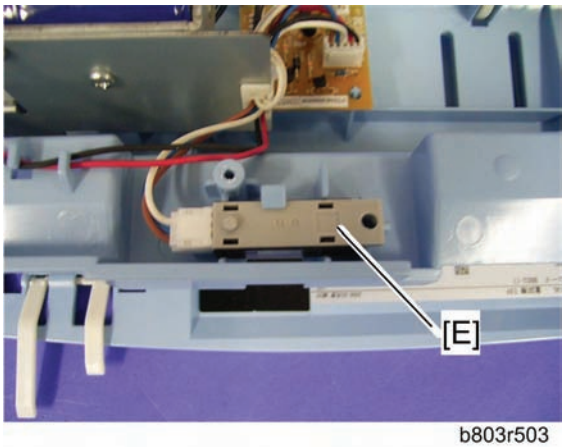

b803r503

6. Paper sensor [E] (x 1, hook)

1.1.2 1-BIN CONTROL BOARD

1. 1-bin tray
2. 1-bin sorter unit ("Paper Sensor")

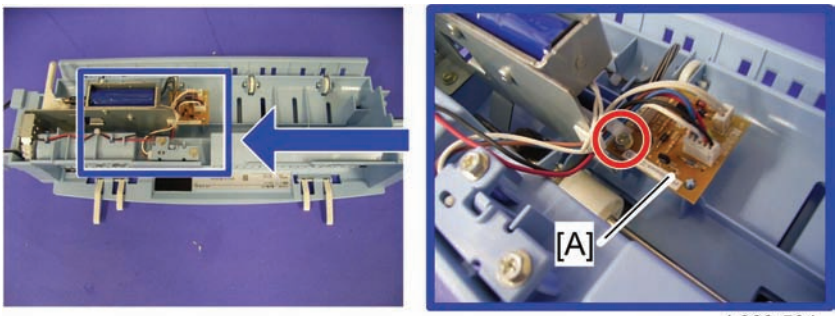

b803r504

3. 1-bin control board [A] (x 1, x 3)

WWW.SERVICE-MANUAL.NET

D537

PAPER FEED UNIT PB3100

REVISION HISTORY		
Page	**Date**	**Added/Updated/New**
		None

WWW.SERVICE-MANUAL.NET

WWW.SERVICE-MANUAL.NET

PAPER FEED UNIT PB3100 (D537)

TABLE OF CONTENTS

1. REPLACEMENT AND ADJUSTMENT..... 1
1.1 EXTERIOR COVER.....1
1.1.1 REAR COVER.....1
1.2 ELECTRICAL COMPONENTS.....2
1.2.1 LIFT MOTORS.....2
1.2.2 UPPER AND LOWER PAPER FEED CLUTCHES.....3
1.2.3 PAPER FEED MOTOR.....4
1.2.4 MAIN BOARD.....4
1.3 FEED.....5
1.3.1 PAPER FEED UNIT.....5
1.3.2 PICK-UP, PAPER FEED AND SEPARATION ROLLERS.....6
1.3.3 LIFT, PAPER END, AND RELAY SENSORS.....7

WWW.SERVICE-MANUAL.NET

WWW.SERVICE-MANUAL.NET

1. REPLACEMENT AND ADJUSTMENT

1.1 EXTERIOR COVER

1.1.1 REAR COVER

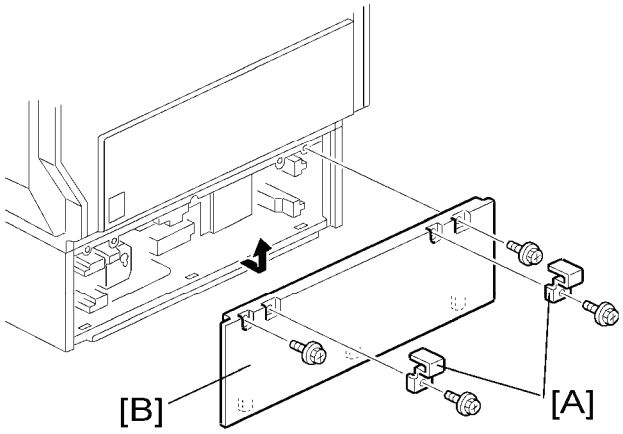

1. Securing brackets [A] (x 1 each)
2. Rear cover [B] (x 2)

WWW.SERVICE-MANUAL.NET

1.2 ELECTRICAL COMPONENTS

1.2.1 LIFT MOTORS

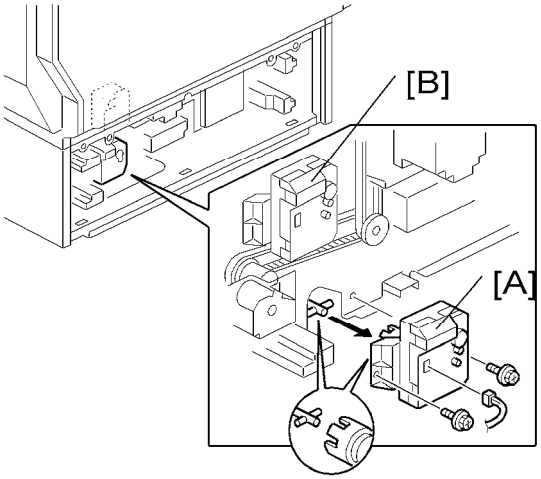

1. Rear cover (☛ "Rear Cover")
2. Lift motors [A][B] (x 2, x 1 each)

WWW.SERVICE-MANUAL.NET

1.2.2 UPPER AND LOWER PAPER FEED CLUTCHES

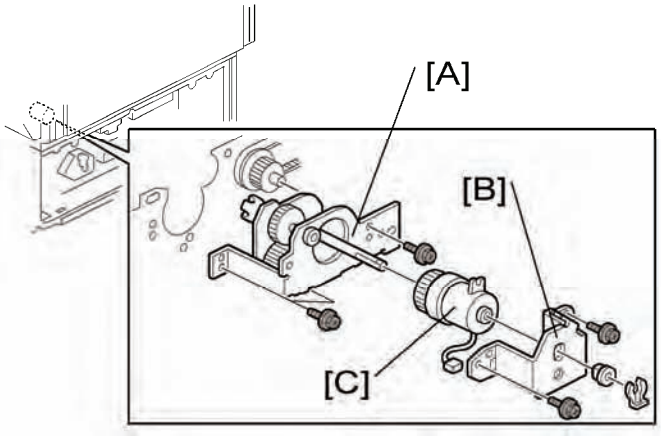

1. Rear cover ("Rear Cover")
2. Upper paper feed gear unit [A] (x 3, x 1)
3. Upper paper feed clutch bracket [B] (x 1, x 2, bushing x 1)
4. Upper paper feed clutch [C]

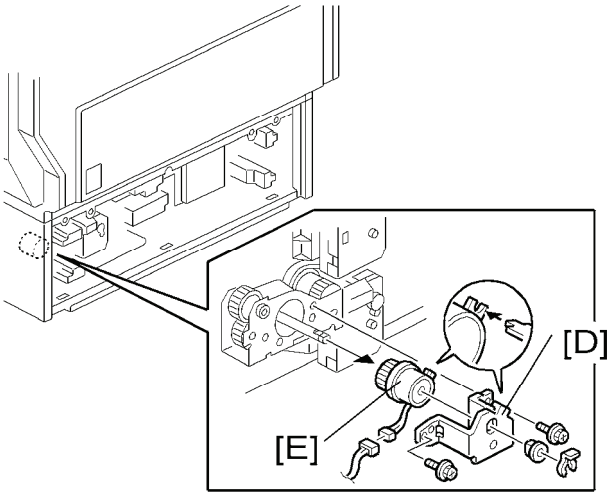

5. Lower paper feed clutch bracket [D] (x 1, bushing x 1, x 2)
6. Lower paper feed clutch [E] (x 1)

WWW.SERVICE-MANUAL.NET

1.2.3 PAPER FEED MOTOR

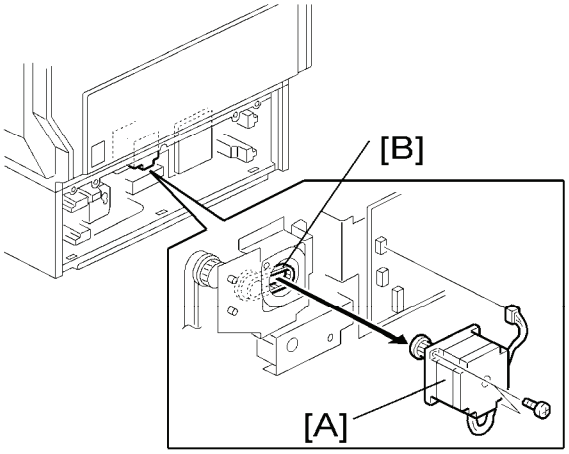

1. Rear cover ("Rear Cover")
2. Paper feed motor [A] (x 1, x 2)

Note

- When installing the paper feed motor, make sure that the gear of the paper feed motor holds the timing belt [B].

1.2.4 MAIN BOARD

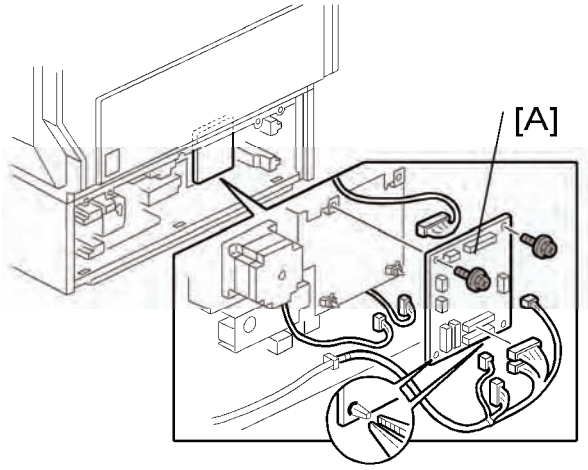

1. Rear cover ("Rear Cover")
2. Main board [A] (All s, x 2, snap pin x 2)

WWW.SERVICE-MANUAL.NET

1.3 FEED

1.3.1 PAPER FEED UNIT

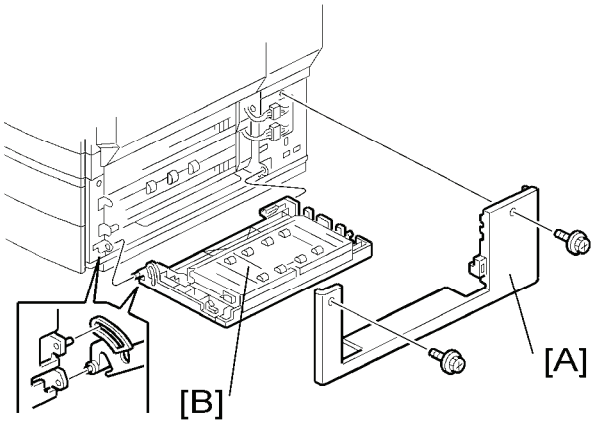

1. Right cover [A] (x 2)
2. Vertical transport guide [B] of the paper feed unit

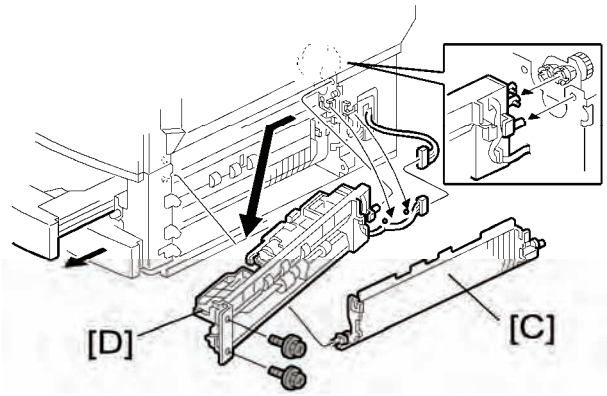

3. Pull the tray 3 (or 4).
4. Paper guide [C]
5. Paper feed unit [D] (x 2, x 1, x 2)

When replacing the paper feed unit of tray 4, do the same.

WWW.SERVICE-MANUAL.NET

1.3.2 PICK-UP, PAPER FEED AND SEPARATION ROLLERS

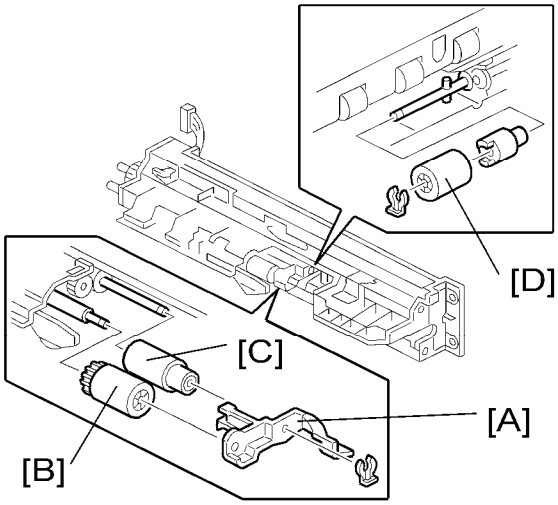

1. Paper feed unit (☛ "Paper Feed Unit)
2. Roller holder [A] (x 1)
3. Pick-up roller [B]
4. Paper feed roller [C]
5. Separation roller [D] (x 1)

WWW.SERVICE-MANUAL.NET

1.3.3 LIFT, PAPER END, AND RELAY SENSORS

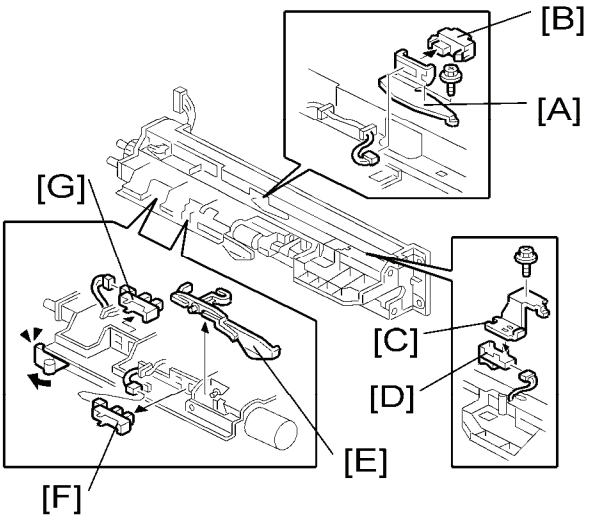

1. Paper feed unit ("Paper Feed Unit")
2. Vertical transport sensor bracket [A] (x 1)
3. Vertical transport sensor [B] (x 1)
4. Paper feed sensor bracket [C] (x 1)
5. Paper feed sensor [D] (x 1)
6. Paper end sensor filler [E]
7. Paper end sensor [F] (x 1)
8. Lift sensor [G] (x 1)

WWW.SERVICE-MANUAL.NET

D538

LCIT PB3110

REVISION HISTORY		
Page	**Date**	**Added/Updated/New**
		None

WWW.SERVICE-MANUAL.NET

WWW.SERVICE-MANUAL.NET

LCIT PB3110 (D538)

TABLE OF CONTENTS

1. REPLACEMENT AND ADJUSTMENT..... 1
1.1 EXTERIOR COVER.....1
1.1.1 LEFT AND RIGHT TRAY.....1
1.1.2 CHANGING THE TRAY SIZE.....2
1.2 ELECTRICAL COMPONENTS.....3
1.2.1 PAPER HEIGHT SENSORS ON PAPER STORAGE SIDE 3
1.2.2 END FENCE HP SENSOR/PAPER END SENSOR 2 3
1.2.3 TRAY LIFT MOTOR 4
1.2.4 TRAY MOTOR.....5
1.2.5 MAIN BOARD.....5
1.2.6 STACK TRANSPORT CLUTCH 6
1.3 FEED 7
1.3.1 PAPER FEED UNIT.....7
1.3.2 PICK-UP, FEED AND SEPARATION ROLLERS 8
1.3.3 PAPER FEED, PAPER END, LIFT AND RELAY SENSORS 9

WWW.SERVICE-MANUAL.NET

WWW.SERVICE-MANUAL.NET

1. REPLACEMENT AND ADJUSTMENT

1.1 EXTERIOR COVER

1.1.1 LEFT AND RIGHT TRAY

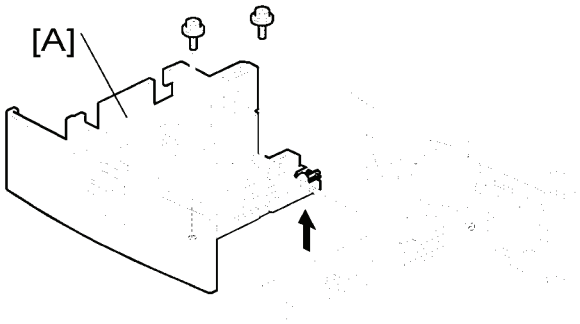

1. Pull the LCT drawer.

Note

- If the right tray comes up with the left tray, push the right tray into the LCT.

2. Left tray [A] (x 2)

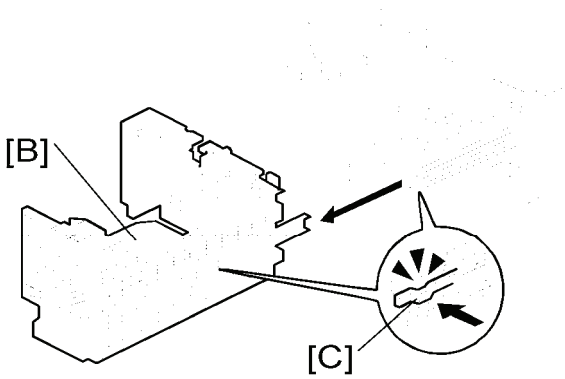

3. Remove the right tray [B] pressing down the stopper [C].

Note

- When reinstalling the tray, set the tray on the guide rail and carefully push the tray in, making sure to keep the tray level.

WWW.SERVICE-MANUAL.NET

1.1.2 CHANGING THE TRAY SIZE

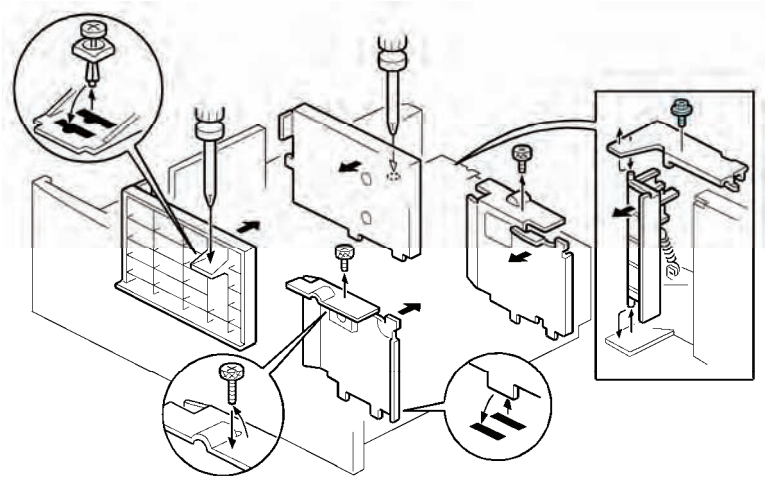

1. Remove the fence screws (x 5).
2. Change the position of the fences.

Note

- Before fastening the screws, set paper in the tray.

WWW.SERVICE-MANUAL.NET

1.2 ELECTRICAL COMPONENTS

1.2.1 PAPER HEIGHT SENSORS ON PAPER STORAGE SIDE

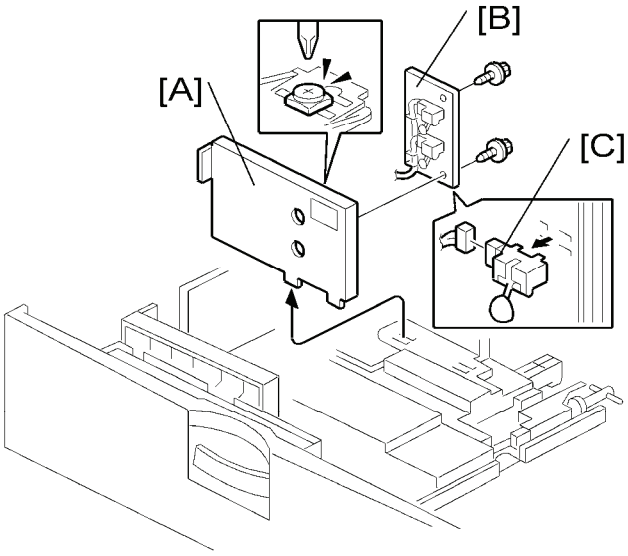

1. Tray (☛ "Left and Right Tray")
2. Rear fence [A] (x 1)
3. Rear fence bracket [B] (x 2)
4. Paper height sensors [C] (x 1 each)

1.2.2 END FENCE HP SENSOR/PAPER END SENSOR 2

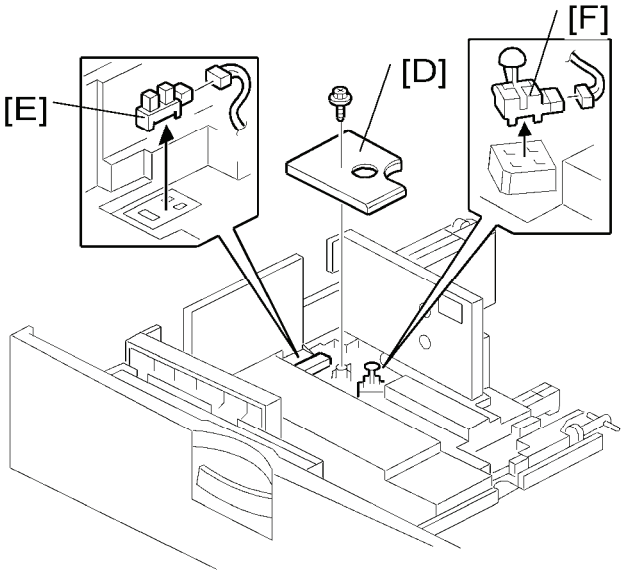

1. Bottom cover [D] (x 1)
2. End fence HP sensor [E] (x 1)
3. Paper end sensor 2 (paper storage side) [F] (x 1)

WWW.SERVICE-MANUAL.NET

1.2.3 TRAY LIFT MOTOR

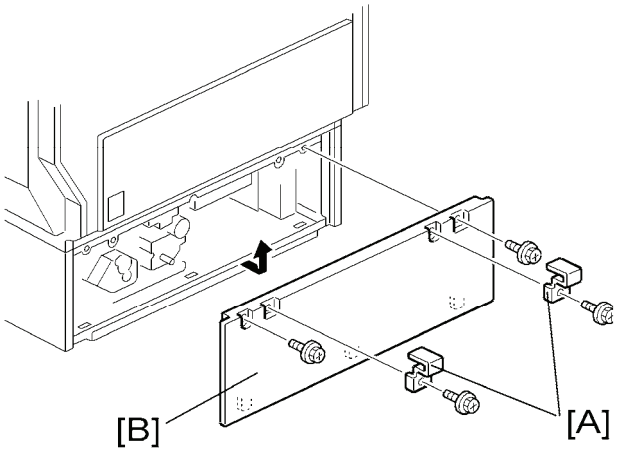

1. Securing brackets [A] (x 1 each)
2. Rear cover [B] (x 2)

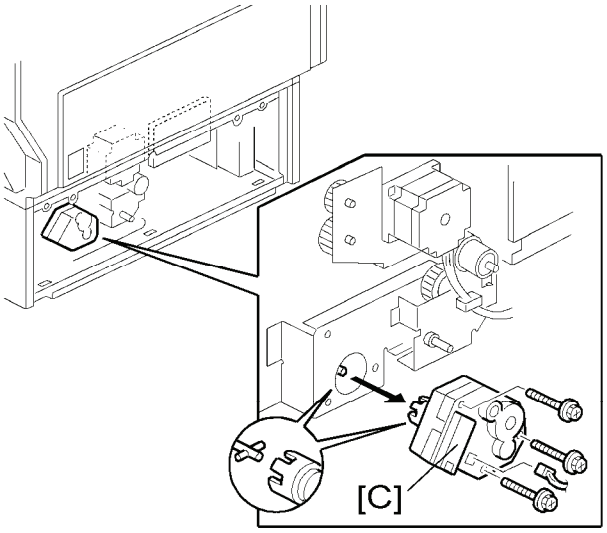

3. Tray lift motor [C] (x 1, x 3)

WWW.SERVICE-MANUAL.NET

1.2.4 TRAY MOTOR

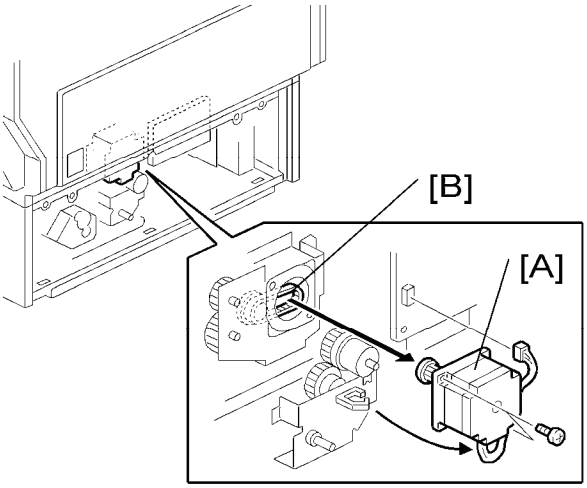

1. Rear cover ("Tray Lift Motor")
2. Tray motor [A] (x 1, x 2)

Note

- When installing the tray motor, make sure that the gear of the tray motor holds the timing belt [B].

1.2.5 MAIN BOARD

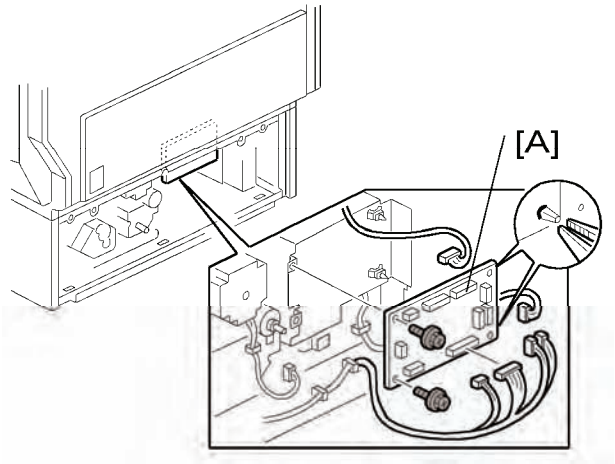

1. Rear cover ("Tray Lift Motor")
2. Main board [A] (All s, x 2, snap x 2)

WWW.SERVICE-MANUAL.NET

1.2.6 STACK TRANSPORT CLUTCH

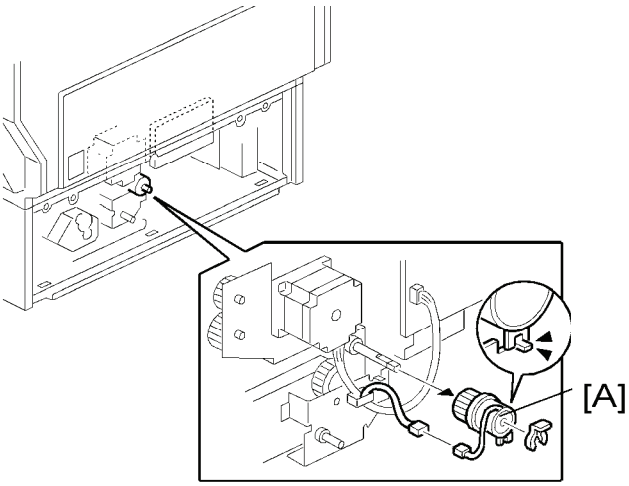

1. Rear cover (☛ "Tray Lift Motor")
2. Stack transport clutch [A] (x 1, x 1)

WWW.SERVICE-MANUAL.NET

1.3 FEED

1.3.1 PAPER FEED UNIT

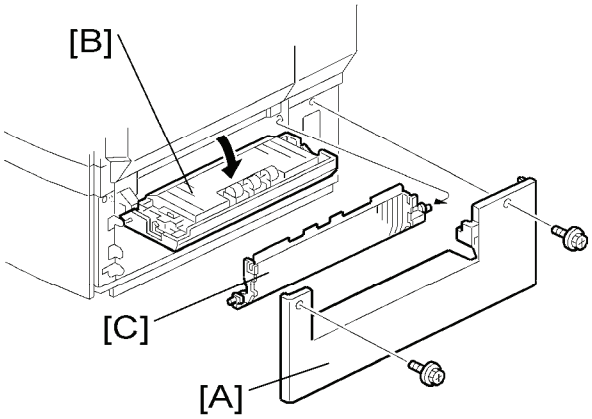

1. Right cover [A]
2. Open the vertical guide plate [B]
3. Guide plate [C]

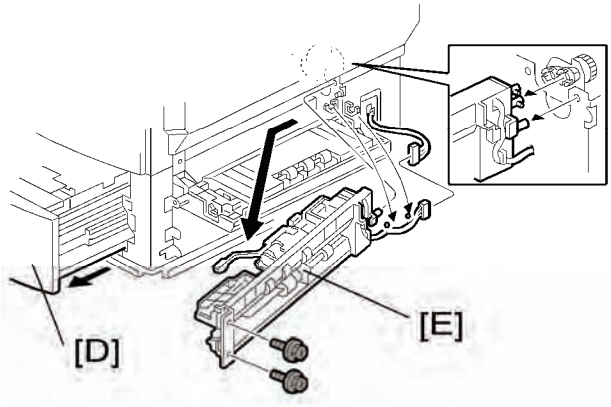

4. Pull the LCT drawer [D].
5. Paper feed unit [E] (x 2 x 1)

WWW.SERVICE-MANUAL.NET

1.3.2 PICK-UP, FEED AND SEPARATION ROLLERS

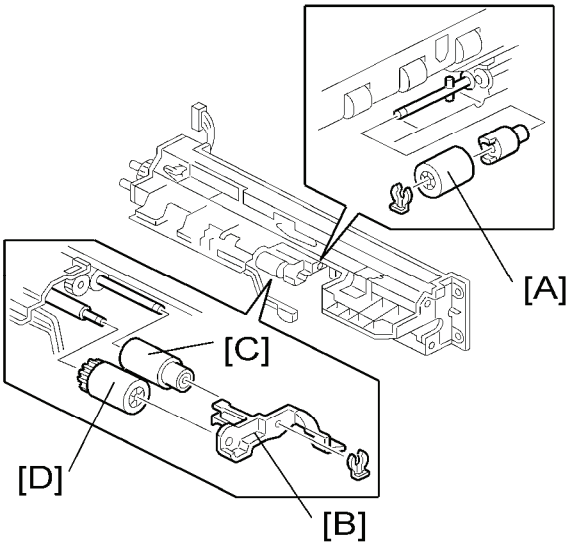

1. Paper feed unit (☛ "Paper Feed Unit")
2. Separation roller [A] (x 1)
3. Roller holder [B] (x 1)
4. Feed roller [C] and pick-up roller [D]

WWW.SERVICE-MANUAL.NET

1.3.3 PAPER FEED, PAPER END, LIFT AND RELAY SENSORS

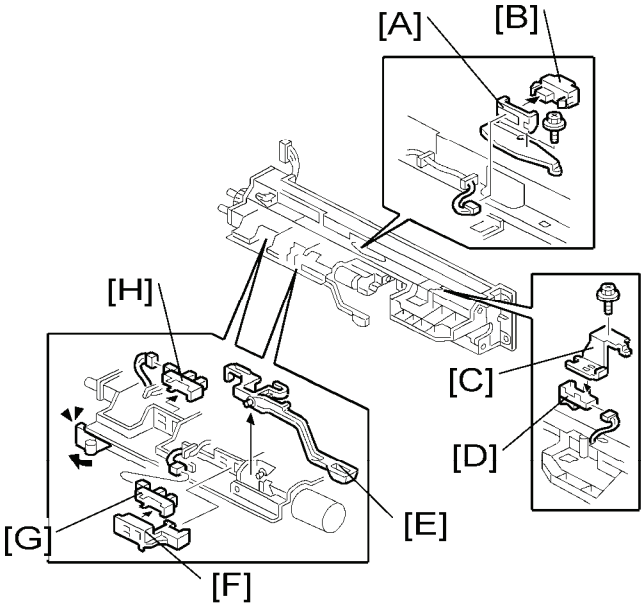

1. Paper feed unit (☛ "Paper Feed Unit")
2. Vertical transport sensor bracket [A] (x 1, x 1)
3. Relay sensor [B]
4. Paper feed sensor bracket [C]
5. Paper feed sensor [D]
6. Paper end feeler [E]
7. Paper end sensor holder [F] (hook x 3)
8. Paper end sensor [G] (x 1, hook x 3)
9. Lift sensor (x 1, hook x 3)

WWW.SERVICE-MANUAL.NET

D539

LCIT RT3010

REVISION HISTORY		
Page	**Date**	**Added/Updated/New**
		None

WWW.SERVICE-MANUAL.NET

WWW.SERVICE-MANUAL.NET

LCIT RT3010

TABLE OF CONTENTS

1. REPLACEMENT AND ADJUSTMENT..... 1
1.1 COVERS.....1
1.1.1 REAR COVER.....1
1.1.2 RIGHT DOOR.....1
1.1.3 FRONT AND TOP COVERS.....2
1.2 PAPER FEED.....3
1.2.1 PICK-UP, PAPER FEED AND SEPARATION ROLLERS.....3
1.3 DRIVE.....4
1.3.1 PAPER FEED CLUTCH.....4
1.3.2 PAPER FEED MOTOR.....4
1.3.3 TRAY LIFT MOTOR.....5
1.4 ELECTRICAL COMPONENTS.....6
1.4.1 MAIN BOARD.....6
1.4.2 LCT SET SWITCHES.....6
Rear.....6
Front.....7
1.4.3 DOWN SWITCH.....7
1.4.4 PAPER FEED, PAPER END, TRAY LIFT AND RELAY SENSORS.....8
1.4.5 STACK SENSOR.....9
1.5 SIDE FENCE POSITION CHANGE.....10

WWW.SERVICE-MANUAL.NET

WWW.SERVICE-MANUAL.NET

1. REPLACEMENT AND ADJUSTMENT

1.1 COVERS

1.1.1 REAR COVER

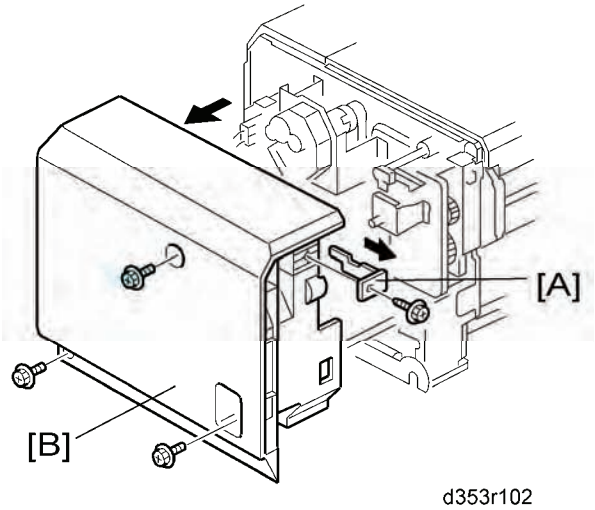

1. Cover [A] (x 1)
2. Rear cover [B] (x 3)

1.1.2 RIGHT DOOR

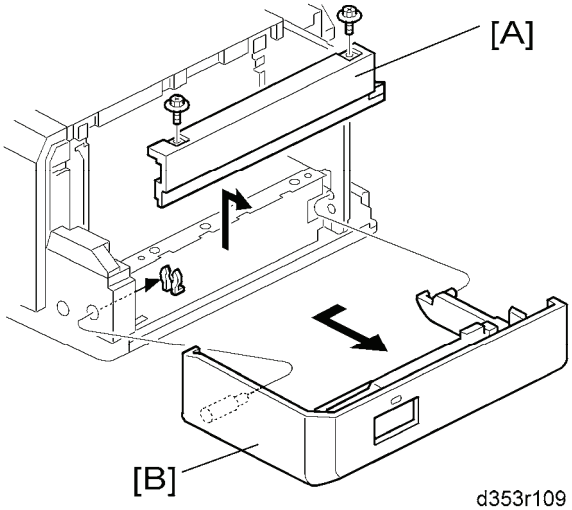

1. Right lower cover [A] (x 2)
2. Right door [B] (x 1)

WWW.SERVICE-MANUAL.NET

1.1.3 FRONT AND TOP COVERS

1. Right door (☛p.1)

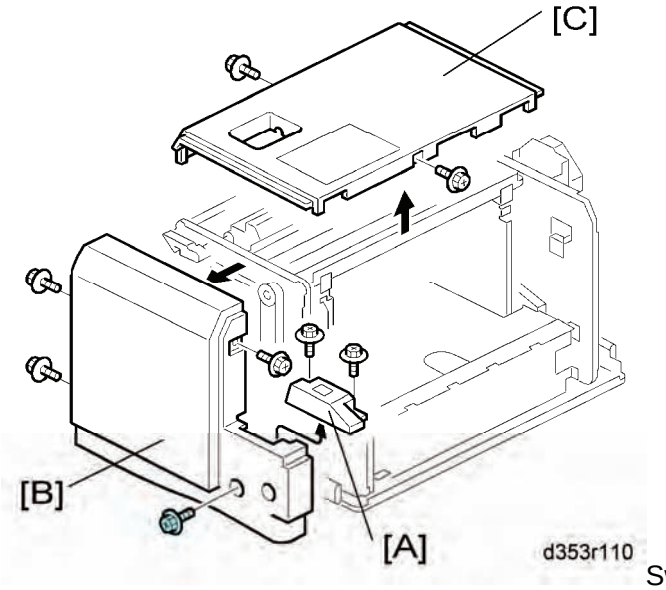

Switch cover [A] (x 2)

2. Front cover [B] (x 4)
3. Top cover [C] (x 2)

WWW.SERVICE-MANUAL.NET

1.2 PAPER FEED

1.2.1 PICK-UP, PAPER FEED AND SEPARATION ROLLERS

1. Open the right door.

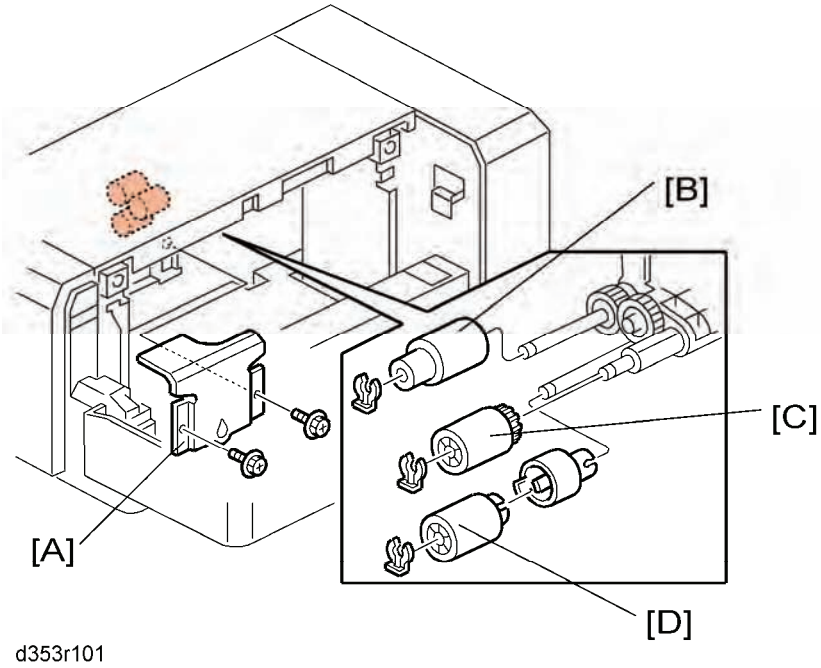

2. Sensor bracket [A] (x 2)
3. Rollers [B], [C], [D] (x 1 each)
   [B]: Paper feed roller
   [C]: Pick-up roller
   [D]: Separation roller

WWW.SERVICE-MANUAL.NET

1.3 DRIVE

1.3.1 PAPER FEED CLUTCH

1. Rear cover (☛p.1)

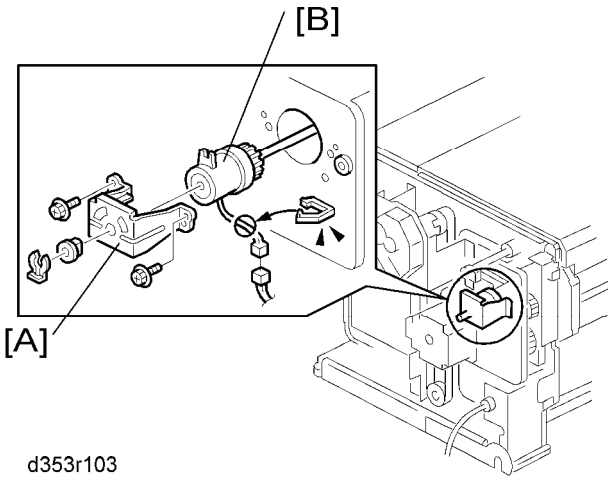

2. Bracket [A] (x 1, x 2, bushing x 1)
3. Paper feed clutch [B] (x 1, x 1)

1.3.2 PAPER FEED MOTOR

1. Rear cover (☛p.1)

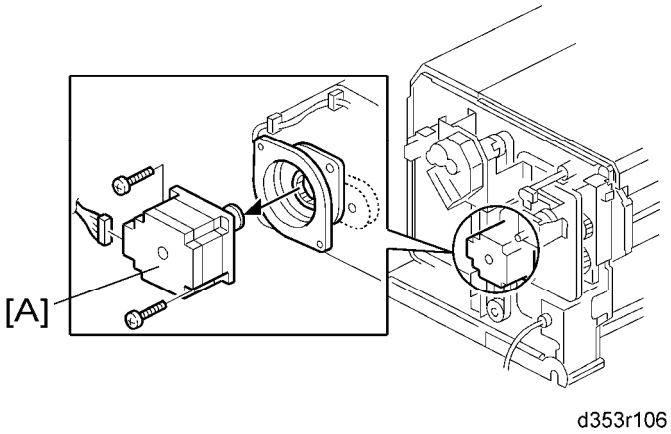

1. Paper feed motor [A] (x 2)

WWW.SERVICE-MANUAL.NET

1.3.3 TRAY LIFT MOTOR

1. Rear cover (☛p.1)

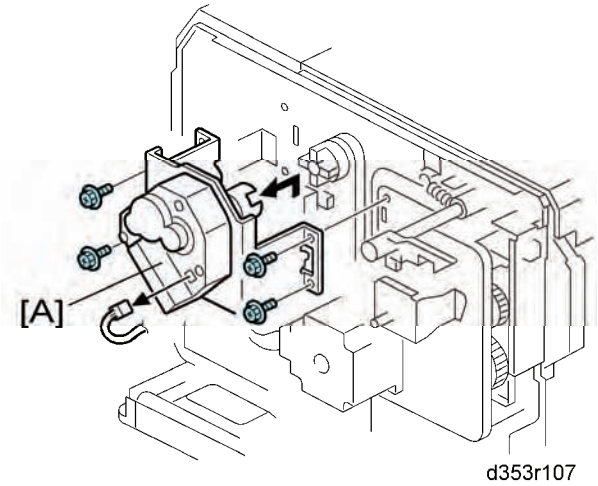

2. Tray lift motor unit [A] (x 4, x 1)

WWW.SERVICE-MANUAL.NET

1.4 ELECTRICAL COMPONENTS

1.4.1 MAIN BOARD

1. Rear cover (☛p.1)

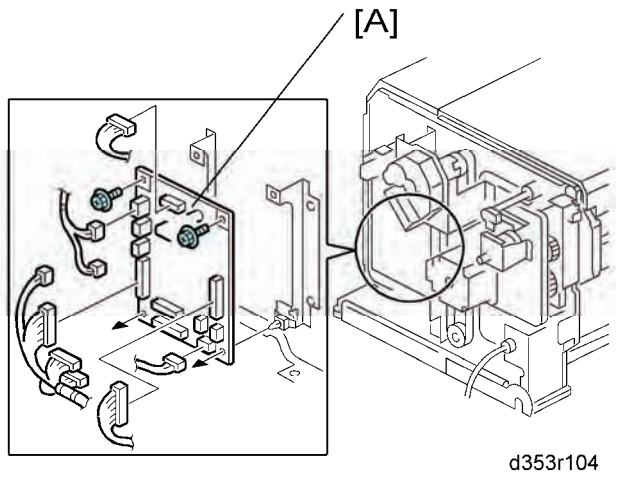

2. Main board (x 2, all 's)

1.4.2 LCT SET SWITCHES

Rear

1. Rear cover (☛p.1)

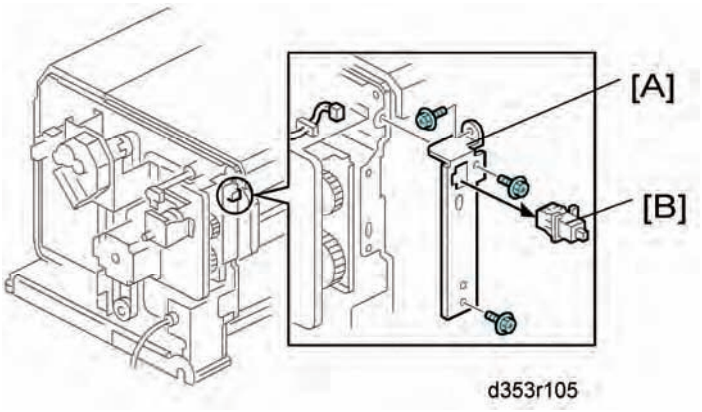

2. Switch bracket [A] (x 3)
3. Rear LCT set switch [B]

WWW.SERVICE-MANUAL.NET

Front

1. Front cover (☛p.2)

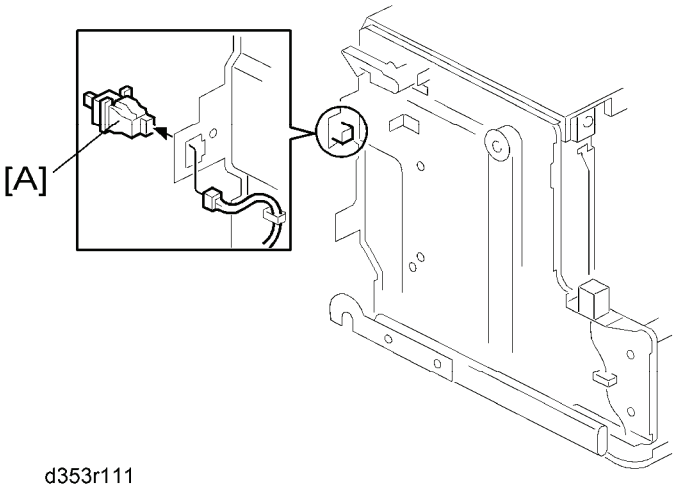

2. Front LCT set switch [A] (x 1)

1.4.3 DOWN SWITCH

1. Front cover (☛p.2)

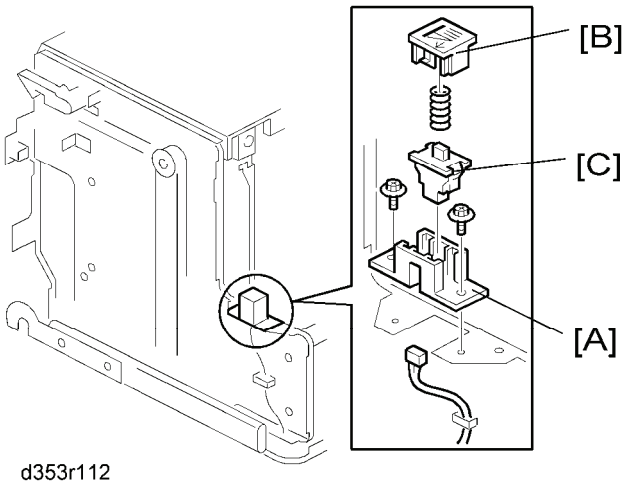

2. Switch base [A] (x 2, x 1)
3. Down button [B] (spring x 1)
4. Down switch [C] (hook)

WWW.SERVICE-MANUAL.NET

1.4.4 PAPER FEED, PAPER END, TRAY LIFT AND RELAY SENSORS

1. Front cover (☛p.2)
2. Top Cover (☛ p.2)

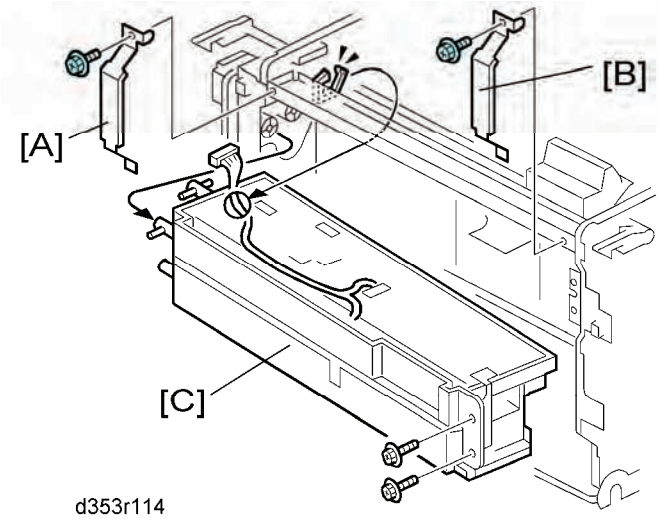

3. Rear ground plate [A] (x 1)
4. Front ground plate [B] (x 1)
5. Paper feed unit [C] (x 2, x 1, x 1)

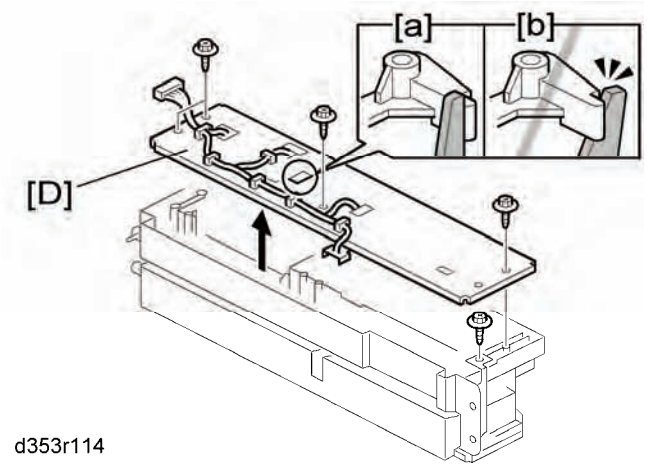

6. Paper feed unit cover [D] (x 5, x 1)

Note

- Before you re-install the paper feed unit cover, make sure that the pick-up solenoid holds the pick-up roller lever ([a]: correct, [b]: incorrect) and the pick-up roller works properly.

WWW.SERVICE-MANUAL.NET

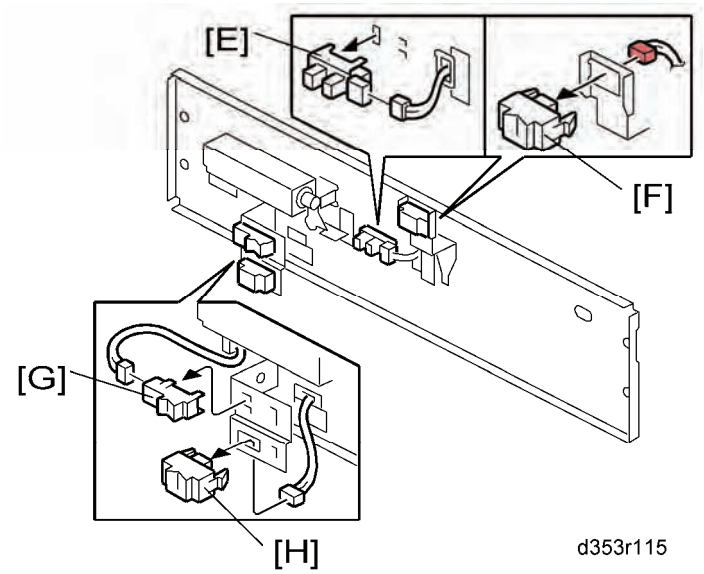

7. Sensors [E], [F], [G], [H] (x 1, hooks each)
   [E]: Tray lift sensor
   [F]: Relay sensor
   [G]: Paper feed sensor
   [H]: Paper end sensor

1.4.5 STACK SENSOR

1. Open the right door
2. Paper feed unit (p.8)

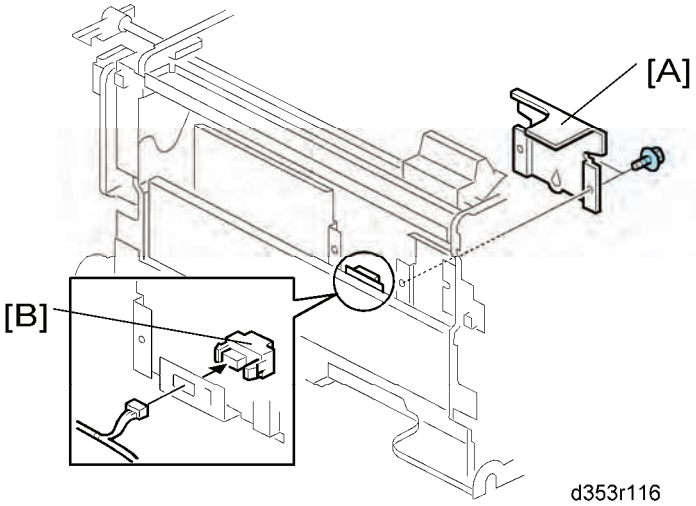

3. Sensor bracket [A] (x 2)
4. Stack sensor [B] (x 1)

WWW.SERVICE-MANUAL.NET

1.5 SIDE FENCE POSITION CHANGE

1. Open the right door of the LCT.
2. Push the down switch to lower the tray bottom plate until it reaches its lowest position.

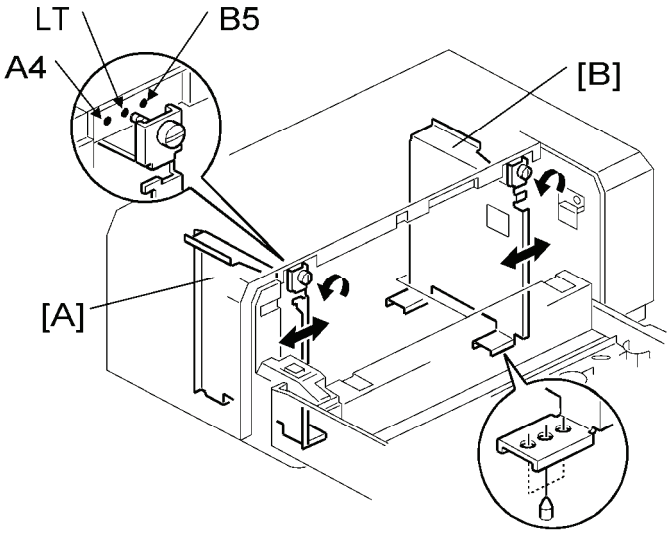

d353i106

3. Remove the front and rear side fences [A, B] (x 1 each).
4. Install the side fences in the correct position (A4 LEF/ LT LEF/ B5 LEF).

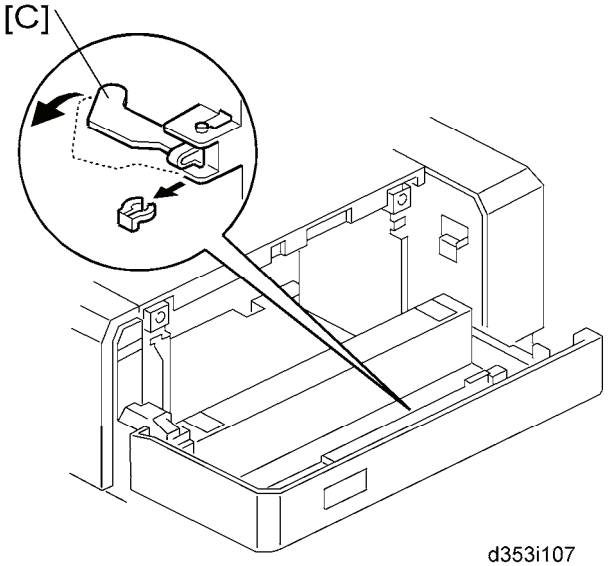

d353i107

5. Pull the end fence [C] for B5 size paper as shown (x 1) if the the side fences are adjusted for B5 size paper.
6. Close the right door.
7. Turn on the main power switch, and then go into the SP mode.
8. Input the correct paper size for the1200-sheet LCT with SP5181-017.

WWW.SERVICE-MANUAL.NET

D540

ARDF DF3040

REVISION HISTORY		
Page	**Date**	**Added/Updated/New**
		None

WWW.SERVICE-MANUAL.NET

WWW.SERVICE-MANUAL.NET

ARDF DF3040 (D540)

TABLE OF CONTENTS

1. REPLACEMENT AND ADJUSTMENT..... 1
1.1 COVERS AND TRAY.....1
1.1.1 FRONT AND REAR COVER.....1
1.1.2 ORIGINAL TRAY.....2
1.2 DOCUMENT FEED COMPONENTS.....3
1.2.1 PICK-UP ROLLER.....3
1.2.2 FEED BELT.....4
1.2.3 SEPARATION ROLLER.....6
1.3 ELECTRICAL COMPONENTS.....7
1.3.1 DF DRIVE BOARD.....7
1.3.2 ORIGINAL LENGTH SENSORS AND TRAILING EDGE SENSOR.....8
1.3.3 ORIGINAL SET, SEPARATION, SKEW CORRECTION AND SCANNING ENTRANCE SENSOR.....9
1.3.4 ORIGINAL WIDTH SENSORS.....10
1.3.5 REGISTRATION SENSOR.....11
1.3.6 ORIGINAL EXIT SENSOR.....12
1.3.7 DF POSITION SENSOR.....13
1.3.8 COVER SENSOR.....14
1.3.9 PICK-UP ROLLER HP AND ORIGINAL STOPPER HP SENSOR.....14
1.3.10 STAMP SOLENOID.....16
1.4 ORIGINAL FEED DRIVE.....18
1.4.1 ADF FEED MOTOR.....18
1.4.2 ADF INVERTER MOTOR.....19
1.4.3 ADF TRANSPORT MOTOR.....20
1.4.4 ADF PICK-UP MOTOR.....21

WWW.SERVICE-MANUAL.NET

WWW.SERVICE-MANUAL.NET

1. REPLACEMENT AND ADJUSTMENT

1.1 COVERS AND TRAY

1.1.1 FRONT AND REAR COVER

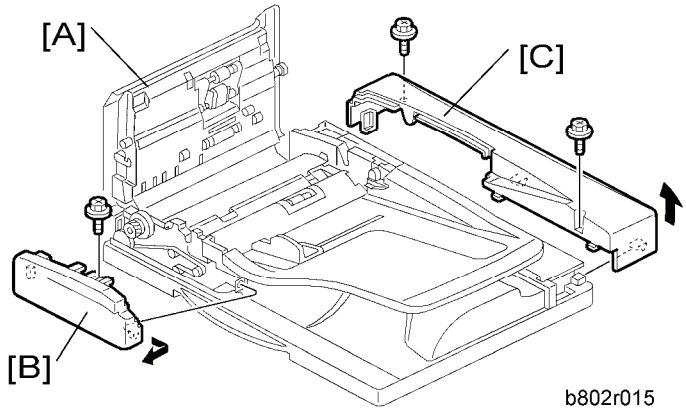

1. Open the left cover [A].
2. Front cover [B] (x 1, hook x 2)
3. Rear cover [C] (x 2, hook x 2)

WWW.SERVICE-MANUAL.NET

1.1.2 ORIGINAL TRAY

1. Open the left cover.
2. Rear cover (☛ "Front and Rear Cover")
3. Front cover (☛ "Front and Rear Cover")

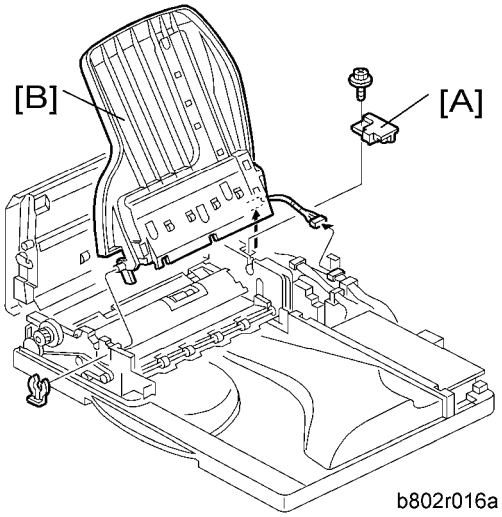

4. Pivot cover [A] (x 1)
5. Original tray [B] (x 1, x 1, x 2)

WWW.SERVICE-MANUAL.NET

1.2 DOCUMENT FEED COMPONENTS

1.2.1 PICK-UP ROLLER

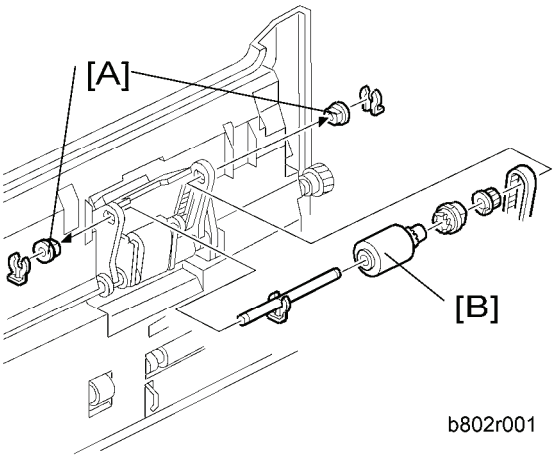

1. Open the left cover.
2. Bushings [A] (x 1 each)
3. Pick-up roller [B] (gear x 1, one-way gear x 1)

WWW.SERVICE-MANUAL.NET

1.2.2 FEED BELT

1. Open the left cover.

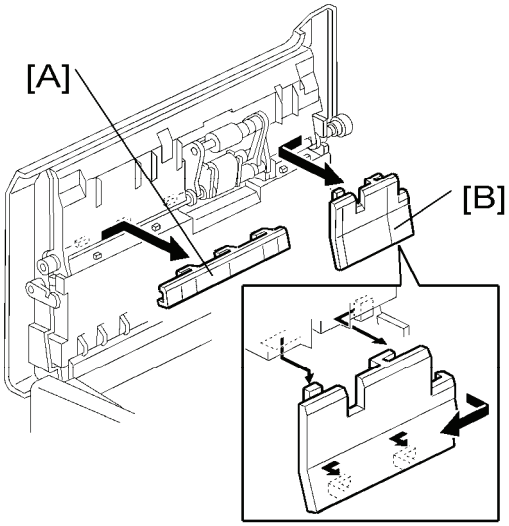

b802r002

2. Front feed unit cover [A]
3. Rear feed unit cover [B] (hook x 2)

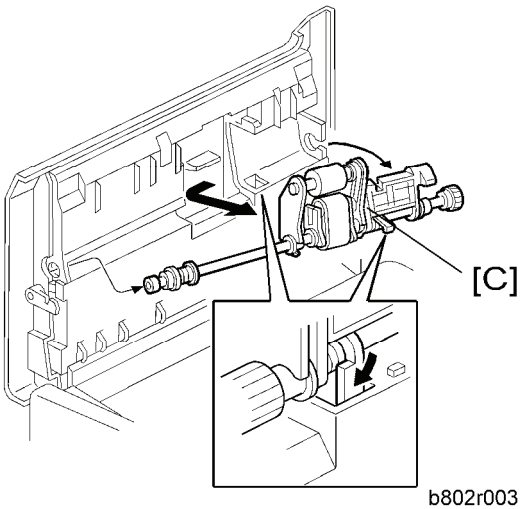

b802r003

4. Feed belt unit [C]

WWW.SERVICE-MANUAL.NET

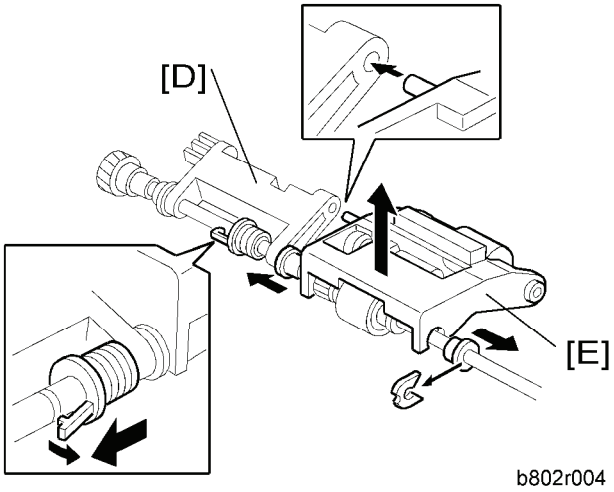

5. Slide the tension plate [D] (hook)
6. Belt unit cover [E] (x 1)

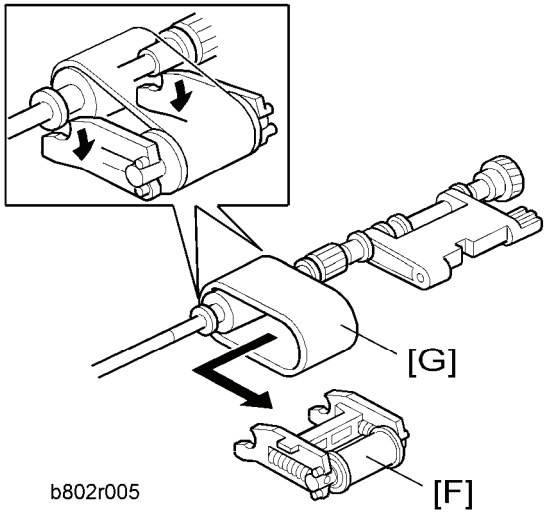

7. Belt tension unit [F]
8. Feed belt [G]

WWW.SERVICE-MANUAL.NET

1.2.3 SEPARATION ROLLER

1. Open the left cover.

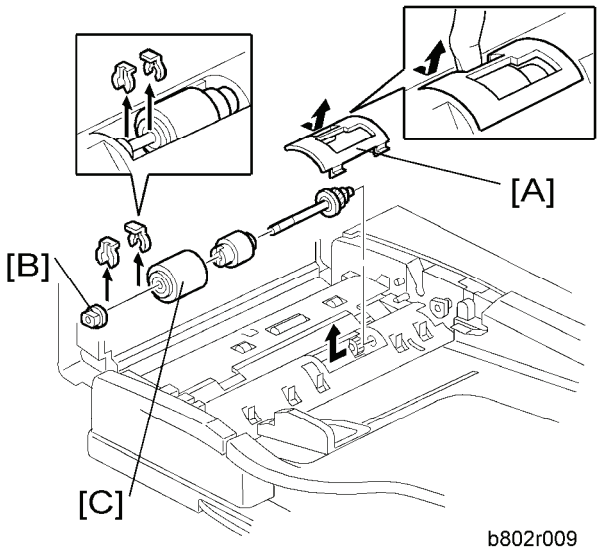

2. Separation roller cover [A]
3. Remove the bushing [B] (x 1).
4. Slide the separation roller shaft to the front side, and then remove it.
5. Separation roller [C] (x 1)

WWW.SERVICE-MANUAL.NET

1.3 ELECTRICAL COMPONENTS

1.3.1 DF DRIVE BOARD

1. Rear cover ("Front and Rear Cover")

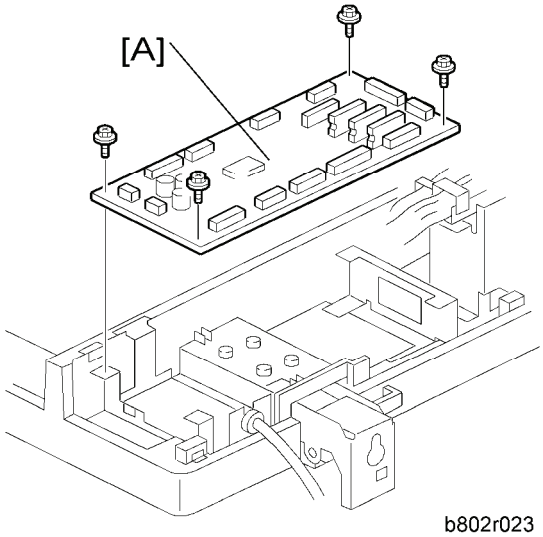

2. DF drive board [A] (x 4, all s)

WWW.SERVICE-MANUAL.NET

1.3.2 ORIGINAL LENGTH SENSORS AND TRAILING EDGE SENSOR

1. Open the left cover.

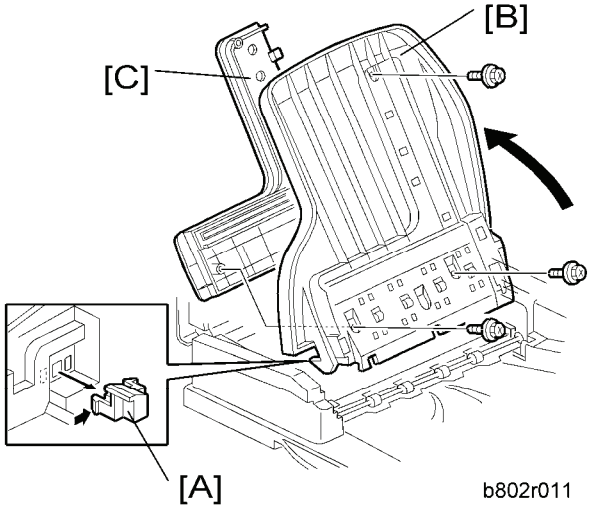

2. Remove the tray stopper [A], while pushing the hook with a screw driver.
3. Open the original tray [B].
4. Original tray cover [C] (x 3)

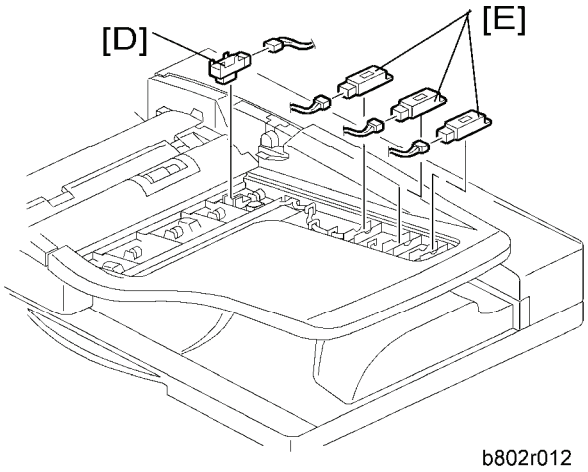

5. Original trailing edge sensor [D] (x 1, hook)
6. Original length sensors [E] (x 1 each, hook)

WWW.SERVICE-MANUAL.NET

1.3.3 ORIGINAL SET, SEPARATION, SKEW CORRECTION AND SCANNING ENTRANCE SENSOR

1. Open the left cover.

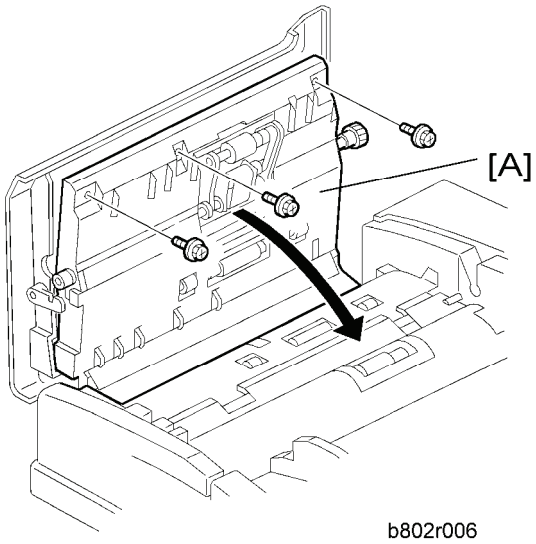

2. Open the inner upper cover [A] (stepped screw x 3).

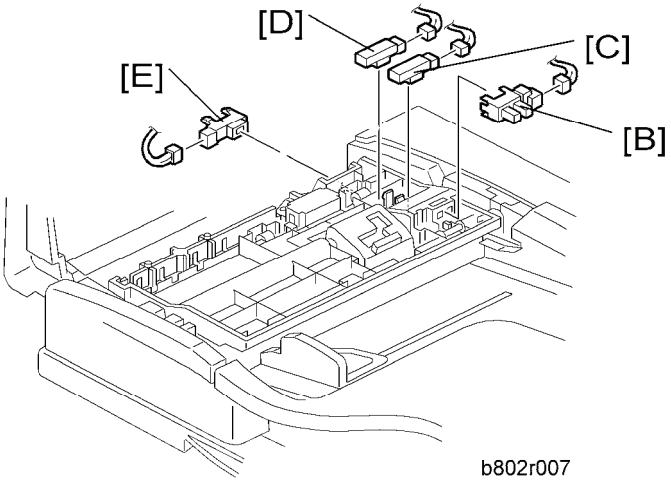

3. Original set sensor [B] (x 1, hook)
4. Separation sensor [C] (x 1, hook)
5. Skew correction sensor [D] (x 1, hook)
6. Scanning entrance sensor [E] (x 1, hook)

WWW.SERVICE-MANUAL.NET

1.3.4 ORIGINAL WIDTH SENSORS

1. Open the left cover.
2. Open the inner upper cover (☛ " Original Set, Separation, Skew Correction and Registration Sensor").

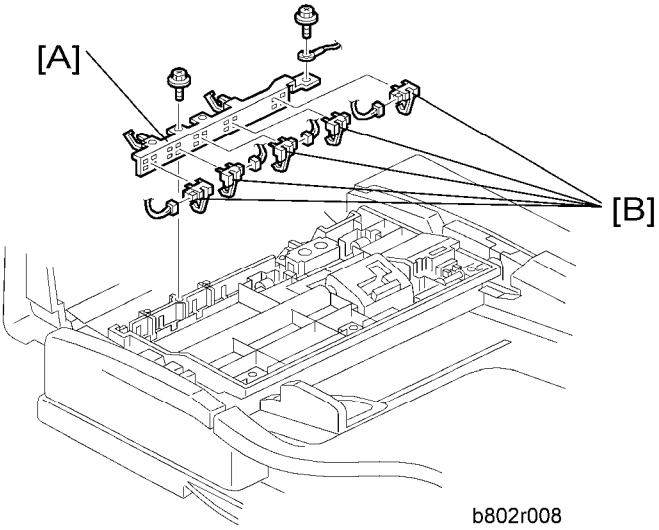

3. Original width sensor bracket [A] (x 2, ground cable x 1).
4. Original width sensors [B] (x 1 each, hook)

WWW.SERVICE-MANUAL.NET

1.3.5 REGISTRATION SENSOR

1. Open the ARDF.

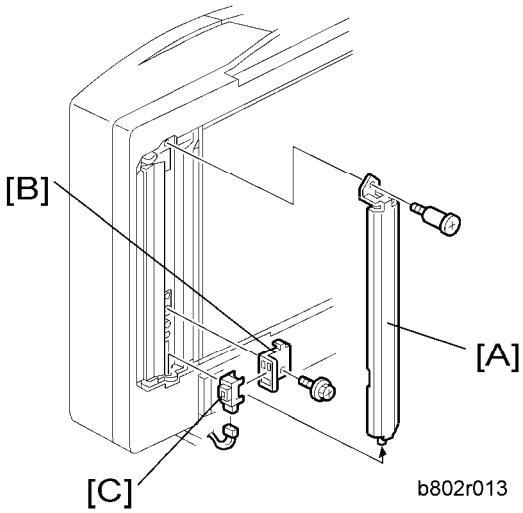

2. White plate [A] (stud screw x 1)
3. Registration sensor bracket [B] (x 1)
4. Registration sensor [C] (x 1)

WWW.SERVICE-MANUAL.NET

1.3.6 ORIGINAL EXIT SENSOR

1. Open the left cover.

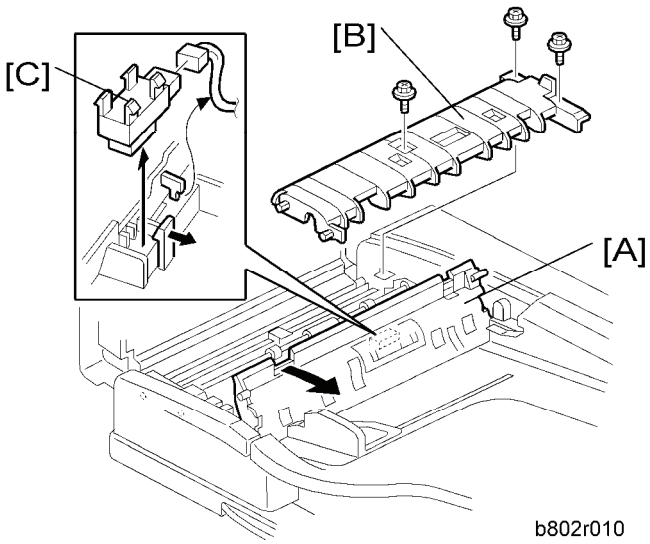

2. Open the feed-in guide plate [A].
3. Guide plate [B] (x 2, stepped screw x 1; front side)
4. Original exit sensor [C] (x 1, hook)

WWW.SERVICE-MANUAL.NET

1.3.7 DF POSITION SENSOR

1. Rear cover (☛ "Front and Rear Cover")
2. ARDF drive board (☛ "ARDF Drive Board")

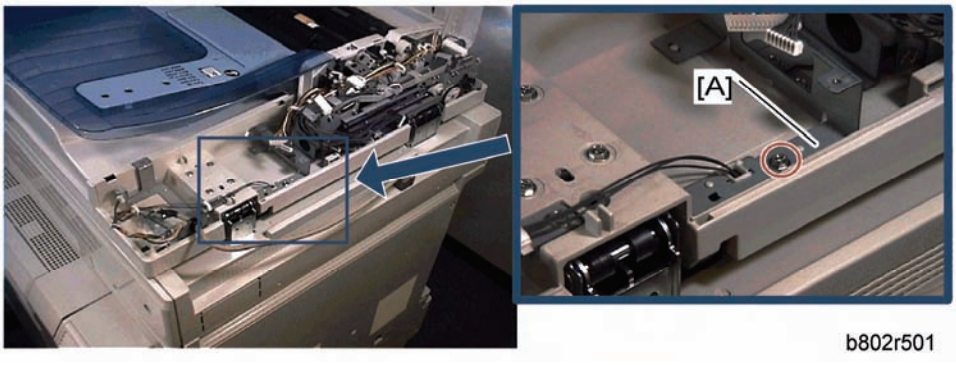

3. DF position sensor bracket [A] (x 1)

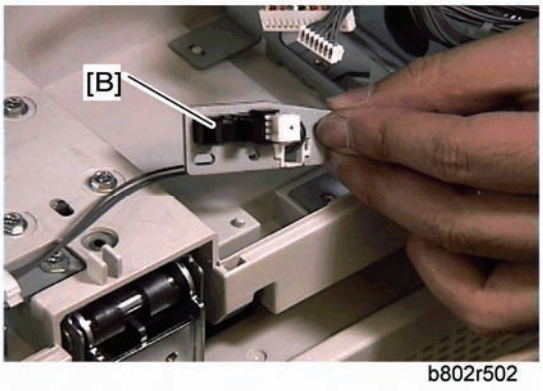

4. DF position sensor [B] (x 1, hook)

WWW.SERVICE-MANUAL.NET

1.3.8 COVER SENSOR

1. Open the left cover.
2. Rear cover (☛ "Front and Rear Cover")

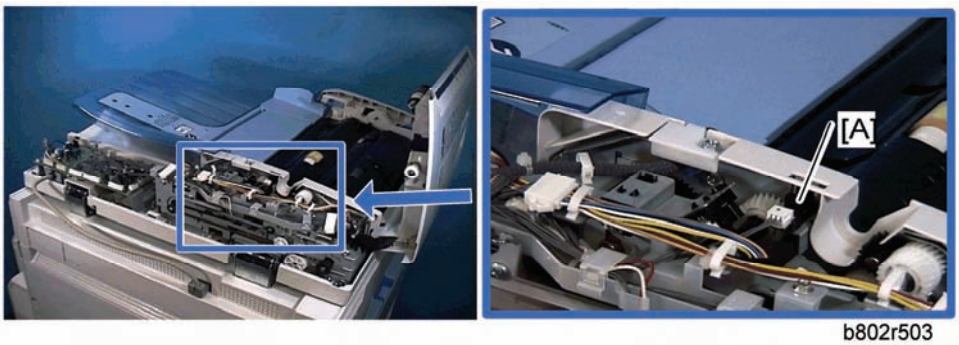

b802r503

3. Cover sensor [A] (☞ x 1, hook)

1.3.9 PICK-UP ROLLER HP AND ORIGINAL STOPPER HP SENSOR

1. Open the left cover.
2. Rear cover (☛ "Front and Rear Cover")

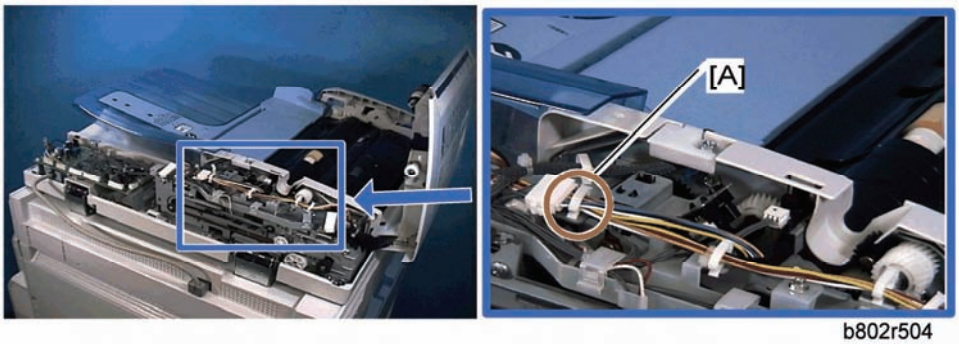

b802r504

3. Release the clamp [A] (☞ x 1), and then slide the harnesses away.

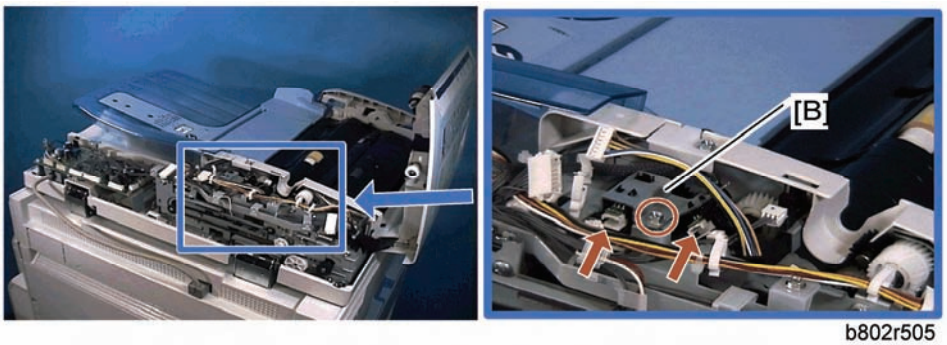

b802r505

4. Sensor bracket [B] (x 1, ☞ x 2)

WWW.SERVICE-MANUAL.NET

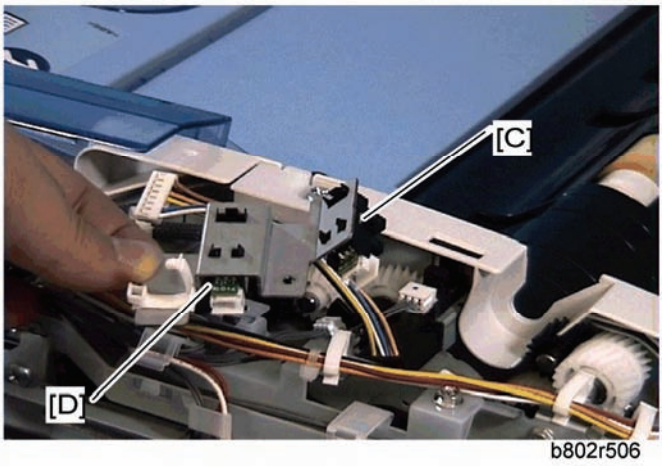

5. Pick-up roller HP sensor [C] (hook)
6. Original stopper HP sensor [D] (hook)

WWW.SERVICE-MANUAL.NET

1.3.10 STAMP SOLENOID

1. Open the left cover.

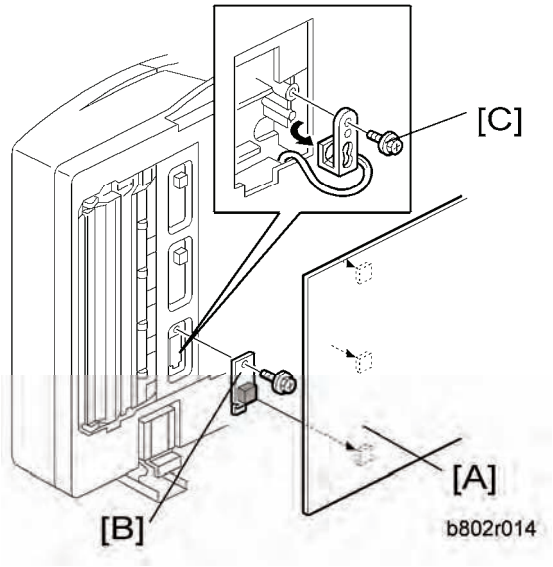

2. Remove the platen plate [A].
3. Stamp solenoid cover [B] (x 1)
4. Remove the screw [C] (x 1).

Note

- You cannot remove the stamp solenoid at this time.

5. Rear cover ("Front and Rear Cover")

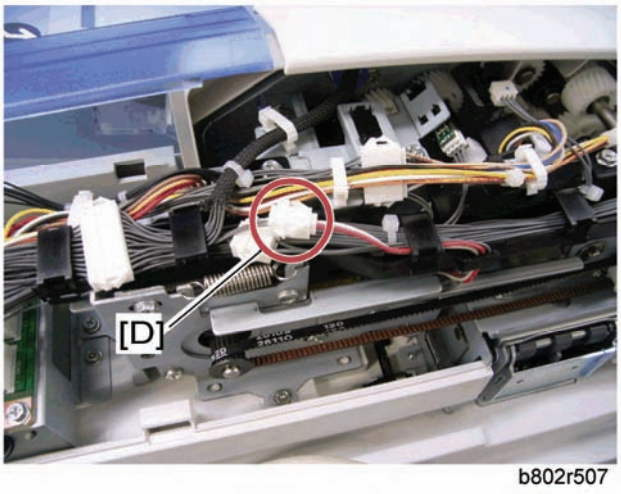

6. Disconnect the stamp solenoid harness [D].
7. ADF feed motor ("ADF Feed Motor")

WWW.SERVICE-MANUAL.NET

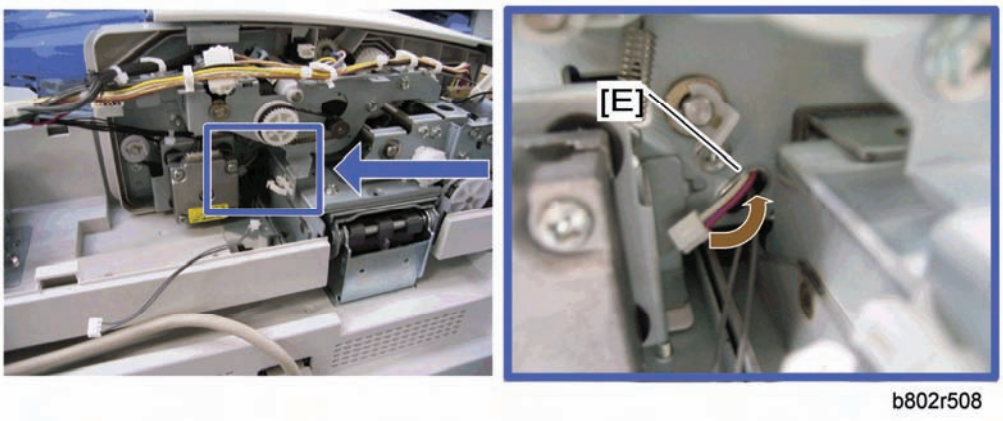

8. Put the stamp solenoid harness into the cutout [E].

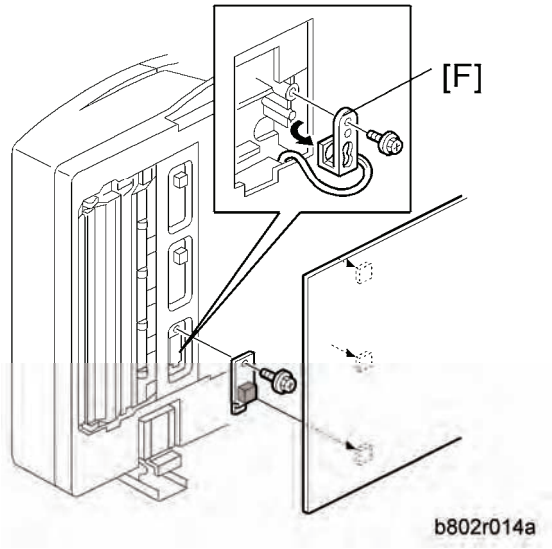

9. Pull out the stamp solenoid [F]

WWW.SERVICE-MANUAL.NET

1.4 ORIGINAL FEED DRIVE

1.4.1 ADF FEED MOTOR

1. Rear cover (☛ "Front and Rear Cover")

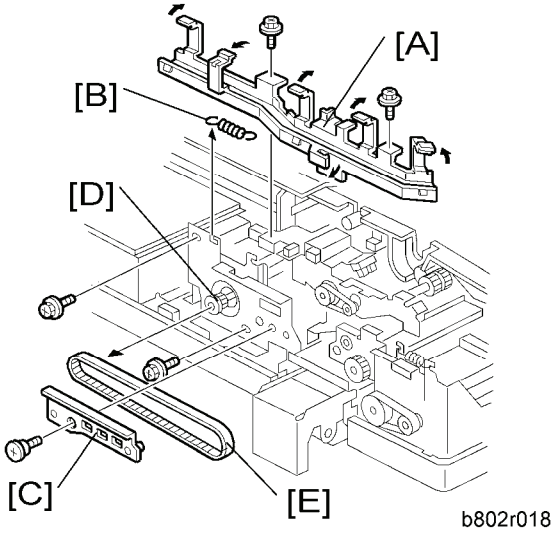

2. Harness guide [A] (x 2, all s, all s)
3. Remove the spring [B].
4. Stay bracket [C] (stepped screw x 1)
5. Slide the feed motor gear [D] to the left side (seen from the front of the machine), and then remove the timing belt [E].

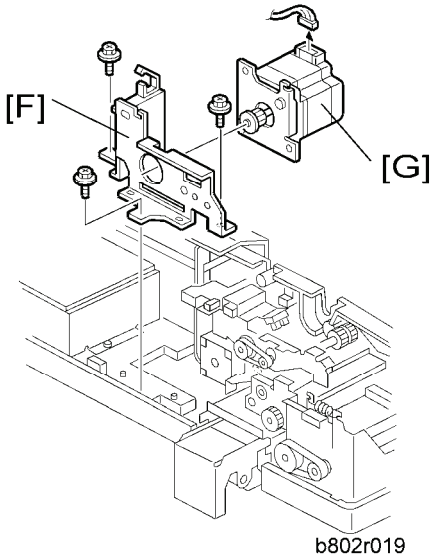

6. ADF feed motor bracket [F] (x 3)
7. ADF feed motor [G] (x 1)

WWW.SERVICE-MANUAL.NET

1.4.2 ADF INVERTER MOTOR

1. ADF feed motor (☛ " ADF Feed Motor")

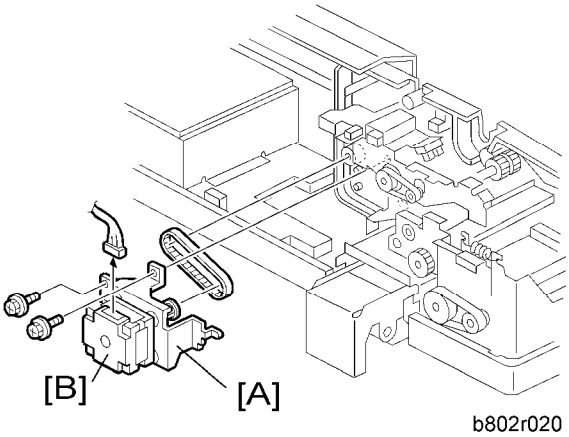

2. ADF inverter motor bracket [A] (x 2, x 1, timing belt)
3. ADF inverter motor [B] (x 4)

WWW.SERVICE-MANUAL.NET

1.4.3 ADF TRANSPORT MOTOR

1. Rear cover (☛ "Front and Rear Cover")

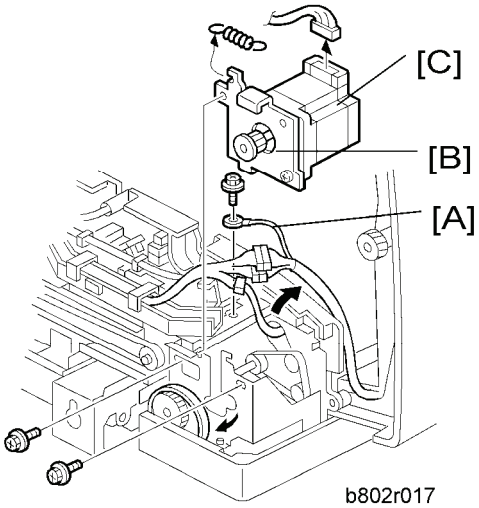

2. Ground cable [A] (x 1)
3. ADF transport motor bracket [B] (x 2, x 1)
4. ADF transport motor [C] (x 2)

WWW.SERVICE-MANUAL.NET

1.4.4 ADF PICK-UP MOTOR

1. Rear cover (☛ "Front and Rear Cover")

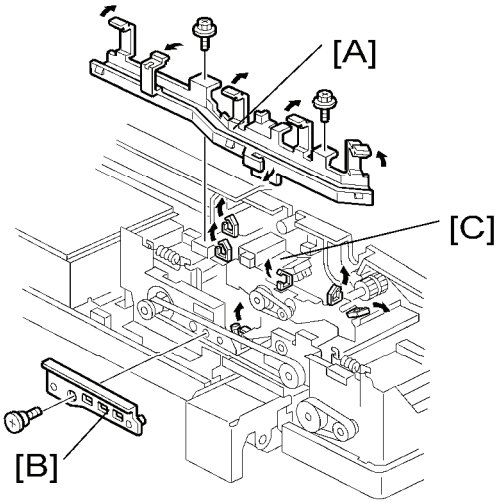

b802r021

2. Harness guide [A] (x 2, all s, all s)
3. Stay bracket [B] (stepped screw x 1)
4. Release 6 clamps on the ADF pick-up motor bracket [C] (x 6).

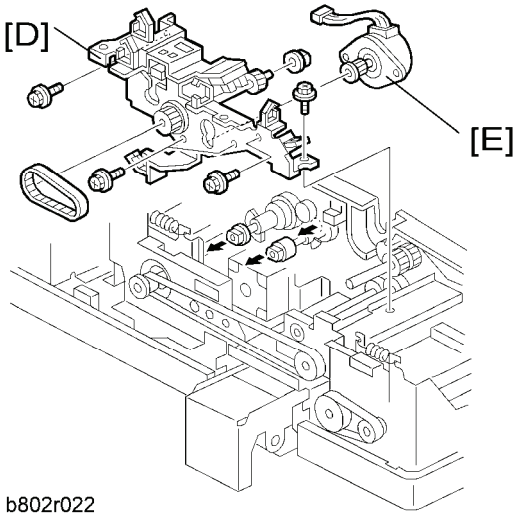

b802r022

5. ADF pick-up motor bracket [D] (x 3, x 1)
6. ADF pick-up motor [E] (x 2, x 1, timing belt)

WWW.SERVICE-MANUAL.NET

WWW.SERVICE-MANUAL.NET

D542

SIDE TRAY TYPE C5501

REVISION HISTORY		
Page	**Date**	**Added/Updated/New**
		None

WWW.SERVICE-MANUAL.NET

WWW.SERVICE-MANUAL.NET

SIDE TRAY TYPE C5501 (D542)

TABLE OF CONTENTS

1. REPLACEMENT AND ADJUSTMENT..... 1
1.1 TRAYS AND COVERS 1
1.1.1 SUB AND MAIN OUTPUT TRAYS 1
1.1.2 TRAY LEFT FRONT AND REAR COVERS 2
1.2 ELECTRICAL COMPONENTS 3
1.2.1 SIDE TRAY CONTROL BOARD.....3
1.2.2 SIDE TRAY DRIVE MOTOR 4
1.2.3 SIDE TRAY RELAY SENSOR.....5
1.2.4 SIDE TRAY EXIT SENSOR.....6

WWW.SERVICE-MANUAL.NET

WWW.SERVICE-MANUAL.NET

1. REPLACEMENT AND ADJUSTMENT

1.1 TRAYS AND COVERS

1.1.1 SUB AND MAIN OUTPUT TRAYS

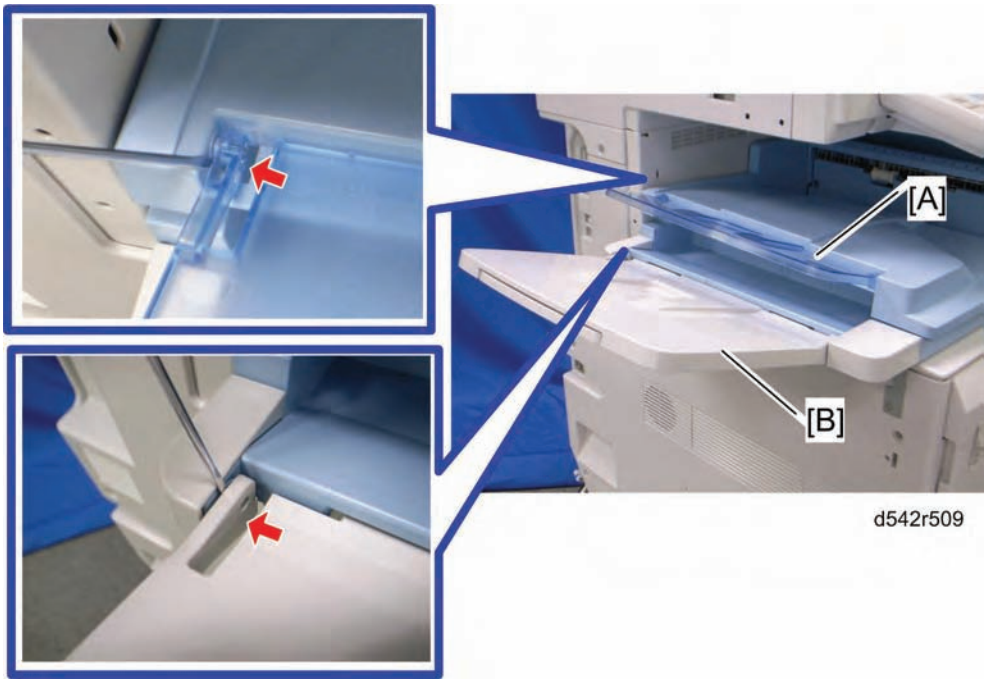

1. Sub output tray [A]
   - Release the rear tab of the sub output tray.
2. Main output tray [B]
   - Release the rear tab of the sub output tray.

WWW.SERVICE-MANUAL.NET

1.1.2 TRAY LEFT FRONT AND REAR COVERS

1. Sub and main output trays (☛ Sub and Main Output Trays)

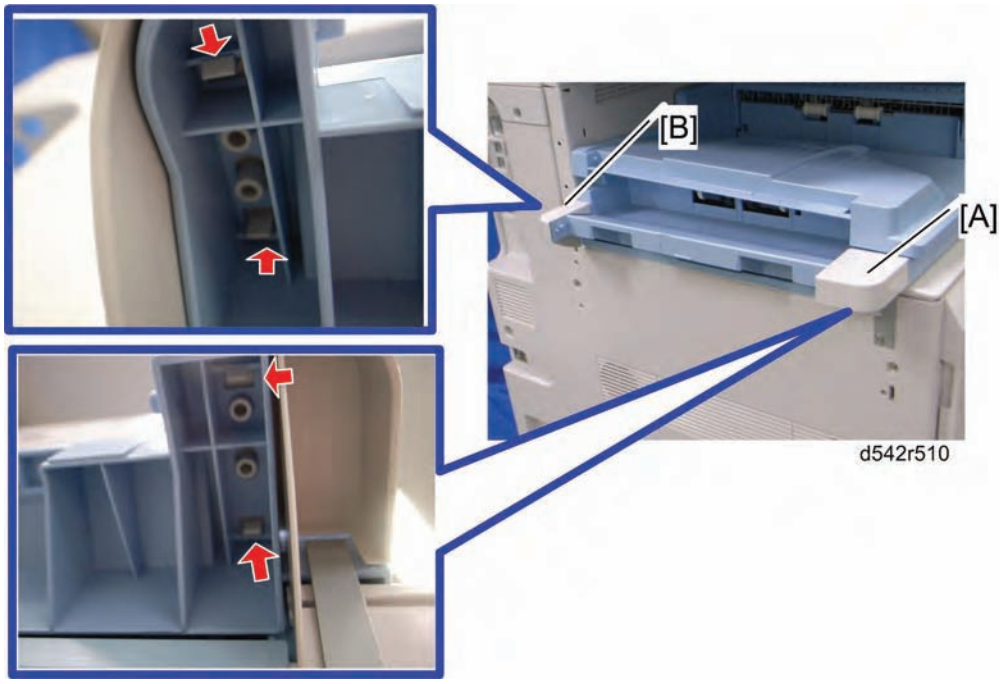

2. Tray left front cover [A]
   - Release the hooks of the tray left front cover.
3. Tray left rear cover [B]
   - Release the hooks of the tray left rear cover.

WWW.SERVICE-MANUAL.NET

1.2 ELECTRICAL COMPONENTS

1.2.1 SIDE TRAY CONTROL BOARD

1. Sub and main output trays (☛ Sub and Main Output Trays)
2. Tray left front and rear covers (☛ Tray Left Front and Rear Covers)
3. Side tray (☛ Installation Procedure in the base copier manual)

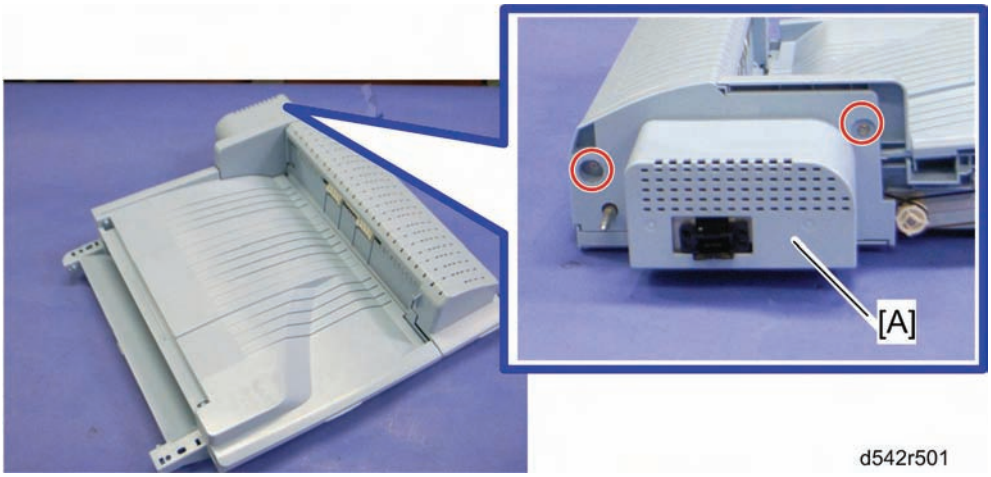

4. Rear cover [A] (x 2)

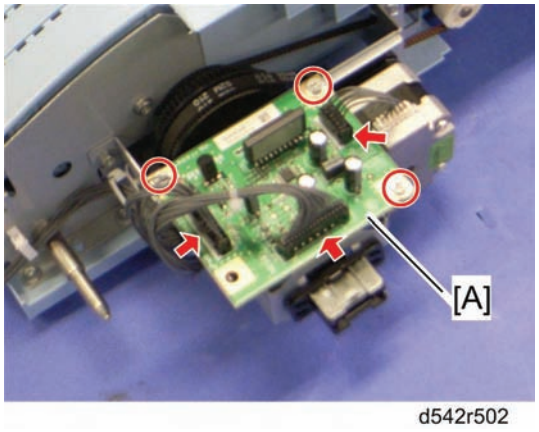

5. Side tray control board [A] (x 3, x 3)

WWW.SERVICE-MANUAL.NET

1.2.2 SIDE TRAY DRIVE MOTOR

1. Sub and main output trays (☛ Sub and Main Output Trays)
2. Tray left front and rear covers (☛ Tray Left Front and Rear Covers)
3. Side tray (☛ Installation Procedure in the base copier manual)
4. Rear cover (☛ Side Tray Control Board)

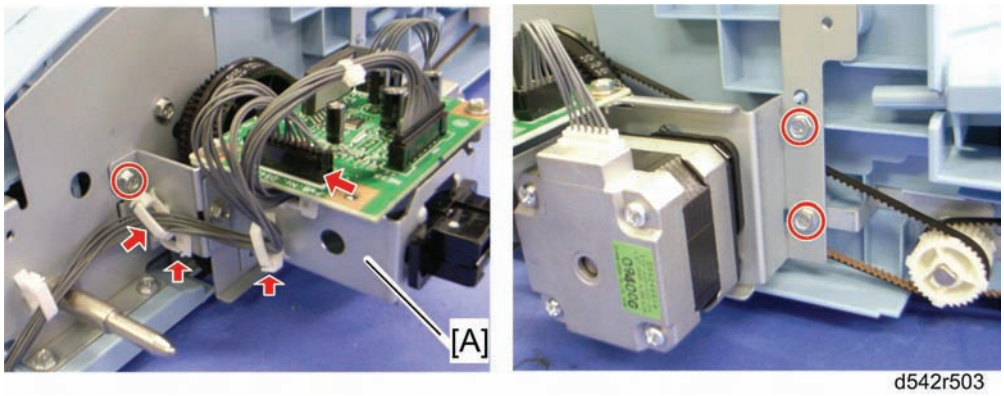

5. Bracket [A] (x 3, x 3, x 1, timing belt x 1)

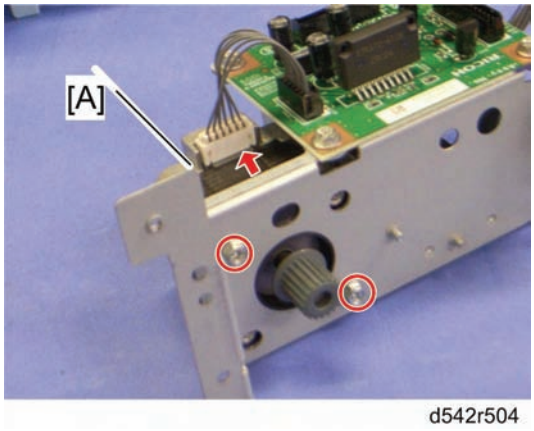

6. Side tray drive motor [A] (x 4, x 1)

WWW.SERVICE-MANUAL.NET

1.2.3 SIDE TRAY RELAY SENSOR

1. Sub and main output trays (☛ Sub and Main Output Trays)
2. Tray left front and rear covers (☛ Tray Left Front and Rear Covers)
3. Side tray (☛ Installation Procedure in the base copier manual)

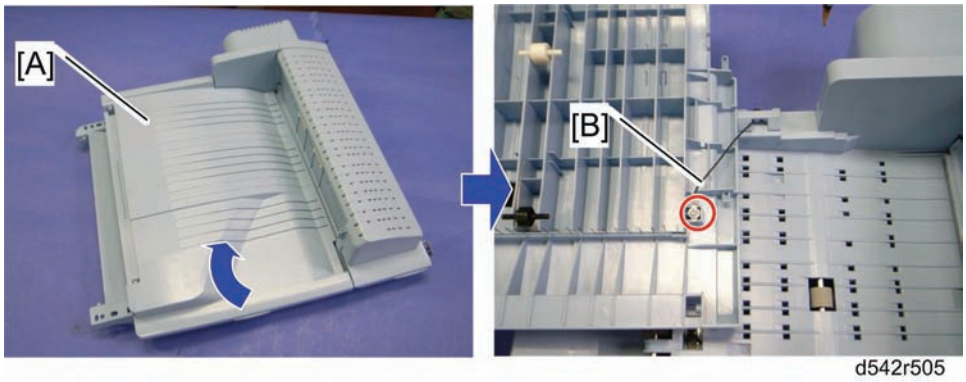

4. Open the paper tray [A].
5. Remove the ground cable [B] (x 1).
6. Remove the paper tray [A].
7. Turn over the side tray.

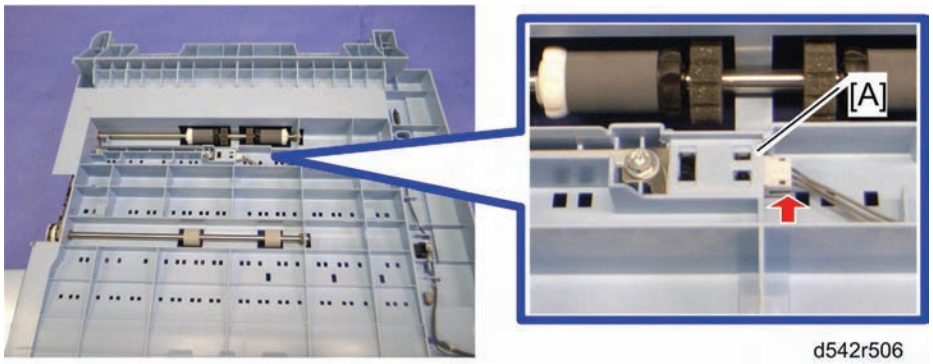

8. Side tray relay sensor [A] (x 1, hooks)
9. Turn over the side tray, and then remove the side tray relay sensor.

WWW.SERVICE-MANUAL.NET

1.2.4 SIDE TRAY EXIT SENSOR

1. Sub and main output trays (☛ Sub and Main Output Trays)
2. Tray left front and rear covers (☛ Tray Left Front and Rear Covers)
3. Side tray (☛ Installation Procedure in the base copier manual)
4. Paper tray (☛ Side Tray Relay Sensor)

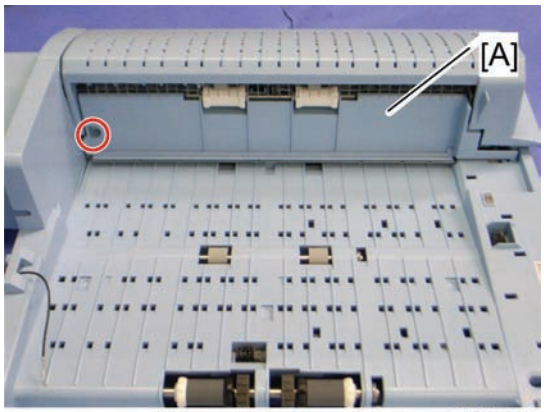

d542r507

5. Exit guide [A] (x 1)

d542r508

6. Side tray exit sensor [A] (x 1, x 1, hooks)

WWW.SERVICE-MANUAL.NET

D545

FAX OPTION TYPE C5501

REVISION HISTORY		
Page	**Date**	**Added/Updated/New**
		None

WWW.SERVICE-MANUAL.NET

WWW.SERVICE-MANUAL.NET

Fax Option Type C5501 (D545)

TABLE OF CONTENTS

1. READ THIS FIRST 5

1.1 IMPORTANT SAFETY NOTICES 5

1.2 SYMBOLS AND ABBREVIATIONS 5

1.2.1 CONVENTIONS USED IN THIS MANUAL 5

1.2.2 CAUTIONS, NOTES, ETC. 6

2. INSTALLATION PROCEDURE 1

2.1 FAX UNIT (D545) 1

2.1.1 COMPONENT CHECK 1

2.1.2 INSTALLATION PROCEDURE 3

2.2 FAX UNIT OPTIONS 9

2.2.1 MEMORY UNIT (G578) 9

2.2.2 HANDSET (B433) 11

For D086/D087 11

For D088/D089 12

2.3 G3 INTERFACE UNIT (D393) 14

2.3.1 COMPONENT CHECK 14

2.3.2 INSTALLATION PROCEDURE 15

For Installing the single G3 Board 15

For Installing the Double G3 Boards 17

3. REPLACEMENT AND ADJUSTMENT 20

3.1 FCU 20

4. TROUBLESHOOTING 21

4.1 ERROR CODES 21

4.2 IFAX TROUBLESHOOTING 42

4.3 IP-FAX TROUBLESHOOTING 45

4.3.1 IP-FAX TRANSMISSION 45

Cannot send by IP Address/Host Name 45

Cannot send via VoIP Gateway 47

Cannot send by Alias Fax number. 48

4.3.2 IP-FAX RECEPTION 50

Cannot receive via IP Address/Host Name. 50

WWW.SERVICE-MANUAL.NET

Cannot receive by VoIP Gateway. 51
Cannot receive by Alias Fax number. 52

5. SERVICE TABLE 54
5.1 BEFOREHAND 54
5.2 SERVICE TABLES 55
5.2.1 SP1-XXX (BIT SWITCHES) 55
5.2.2 SP2-XXX (RAM DATA) 57
5.2.3 SP3-XXX (TEL LINE SETTINGS) 58
5.2.4 SP4-XXX (ROM VERSIONS) 61
5.2.5 SP5-XXX (INITIALIZING) 61
5.2.6 SP6-XXX (REPORTS) 62
5.2.7 SP7-XXX (TEST MODES) 65
5.3 BIT SWITCHES 67
5.3.1 SYSTEM SWITCHES 67
5.3.2 I-FAX SWITCHES 84
5.3.3 PRINTER SWITCHES 92
5.3.4 COMMUNICATION SWITCHES 101
5.3.5 G3 SWITCHES 113
5.3.6 G3-2 AND G3-3 SWITCHES 124
5.3.7 G4 INTERNAL SWITCHES 134
5.3.8 G4 PARAMETER SWITCHES 134
5.3.9 IP FAX SWITCHES 135
5.4 NCU PARAMETERS 144
5.5 DEDICATED TRANSMISSION PARAMETERS 160
5.5.1 PROGRAMMING PROCEDURE 160
5.5.2 PARAMETERS 161
Fax Parameters 161
E-mail Parameters 166
5.6 SERVICE RAM ADDRESSES 170

6. SPECIFICATIONS 179
6.1 GENERAL SPECIFICATIONS 179
6.1.1 FCU 179
6.1.2 CAPABILITIES OF PROGRAMMABLE ITEMS 181
6.2 IFAX SPECIFICATIONS 182
6.3 IP-FAX SPECIFICATIONS 184
6.4 FAX UNIT CONFIGURATION 185

WWW.SERVICE-MANUAL.NET

WWW.SERVICE-MANUAL.NET

WWW.SERVICE-MANUAL.NET

Read This First

Important Safety Notices

⚠WARNING

- Never install telephone wiring during a lightning storm.
- Never install telephone jacks in wet locations unless the jack is specifically designed for wet locations.
- Never touch uninsulated telephone wires or terminals unless the telephone line has been disconnected at the network interface.
- Use caution when installing or modifying telephone lines.
- Avoid using a telephone (other than a cordless type) during an electrical storm. There may be a remote risk of electric shock from lightning.
- Do not use a telephone or cellular phone to report a gas leak in the vicinity of the leak.

⚠CAUTION

- Before installing the fax unit, switch off the main switch, and disconnect the power cord.
- The fax unit contains a lithium battery. The danger of explosion exists if a battery of this type is incorrectly replaced. Replace only with the same or an equivalent type recommended by the manufacturer. Discard batteries in accordance with the manufacturer's instructions and local regulations.

Note

- **Note for Australia**:
- Unit must be connected to Telecommunication Network through a line cord that meets the requirements of ACA Technical Standard TS008.

Symbols and Abbreviations

Conventions Used in this Manual

This manual uses several symbols.

Symbol	What it means
☛	Refer to section number
✎	Screw

WWW.SERVICE-MANUAL.NET

	Connector
	E-ring
	Clip ring
	Clamp

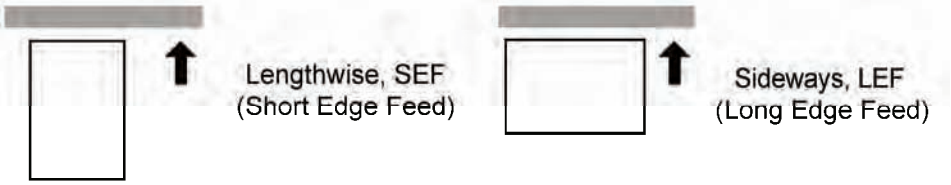

Cautions, Notes, etc.

The following headings provide special information:

WARNING

- Failure to obey warning information could result in serious injury or death.

CAUTION

- Obey these guidelines to ensure safe operation and prevent minor injuries.

Important

- Obey these guidelines to avoid problems such as misfeeds, damage to originals, loss of valuable data and to prevent damage to the machine.
- Always obey these guidelines to avoid serious problems such as misfeeds, damage to originals, loss of valuable data and to prevent damage to the machine. bold is added for emphasis.

Note

- This document provides tips and advice about how to best service the machine.

WWW.SERVICE-MANUAL.NET

1. INSTALLATION PROCEDURE

1.1 FAX UNIT (D545)

1.1.1 COMPONENT CHECK

Check the quantity and condition of the components against the following list.

No.	Description	Q'ty
1	FCU I/F Board	1
2	FCU	1
3	FCU I/F Board Bracket	1
4	Support Bracket	1
5	Speaker	1
6	Modular Bracket	1
7	Handset Bracket (NA only)	2
8	Telephone Cable (NA only)	1
9	Multi-Language Decals	1 (Excluding NA)/ 2 (EU)
10	Harness: TEL and LINE	2
11	G3 Decal	1
12	Serial Number Decal	1
13	FCC Decal (NA only)	1
14	Ferrite Core	1 (EU) or 2 (NA)
15	Screw: M3x6	13
16	Clamp	3
17	Fax Key top	2

WWW.SERVICE-MANUAL.NET

Fax Unit (D545)

No.	Description	Q'ty
18	EMC Address Decal	1 (EU Only)
19	Quick Reference Fax Guide	1 (Excluding EU)

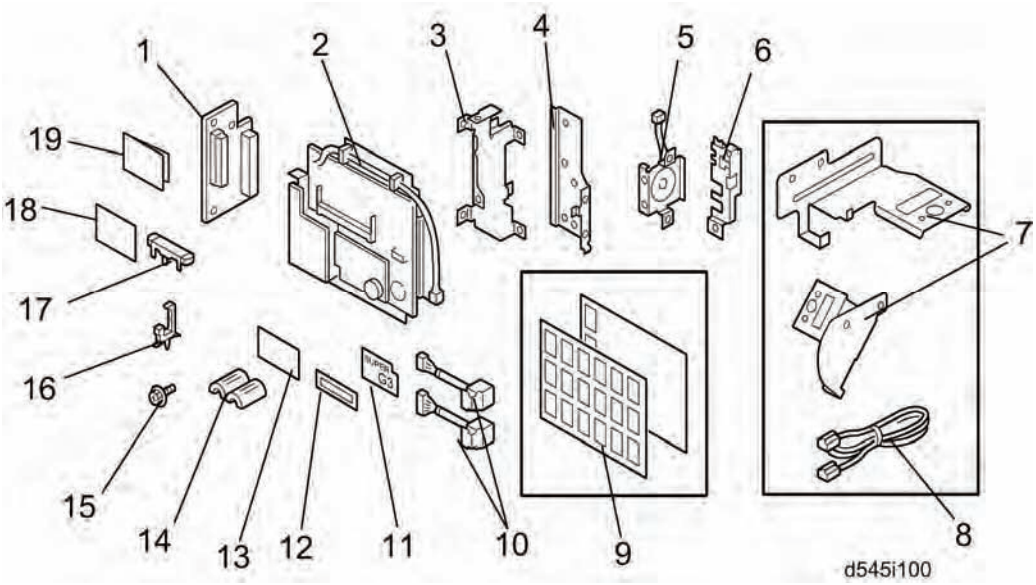

WWW.SERVICE-MANUAL.NET

1.1.2 INSTALLATION PROCEDURE

CAUTION

- **Before installing this fax unit:**
- Print out all data in the printer buffer.
- Turn off the main power switch and disconnect the power cord and the network cable.

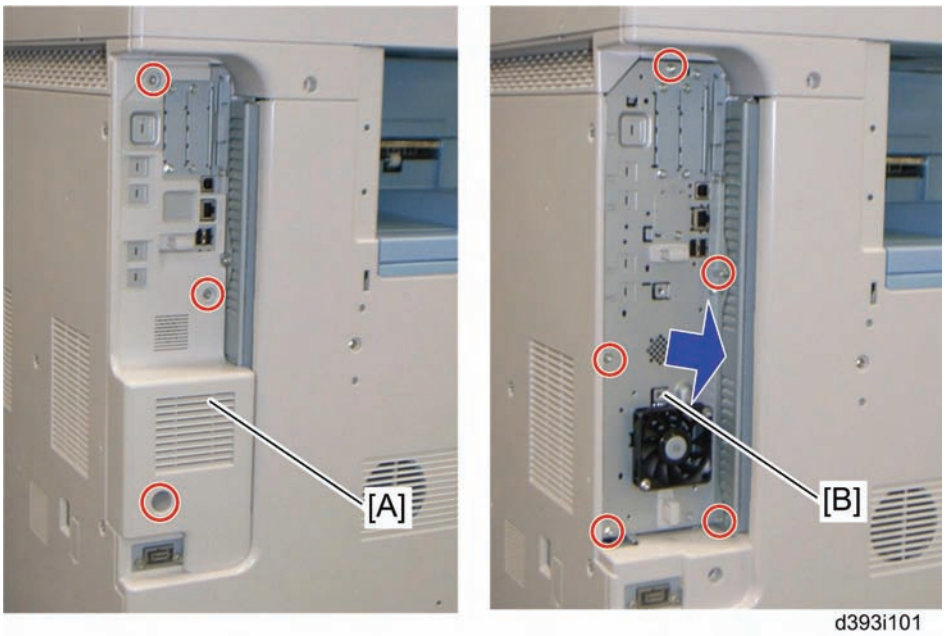

1. Remove the controller box cover [A] (x 3).
2. Remove the controller box [B] (x 5).

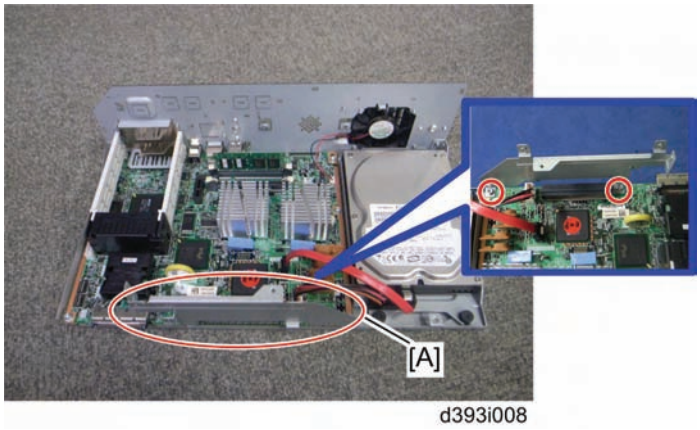

3. Attach the FCU I/F board bracket [A] to the controller board (x 2).

WWW.SERVICE-MANUAL.NET

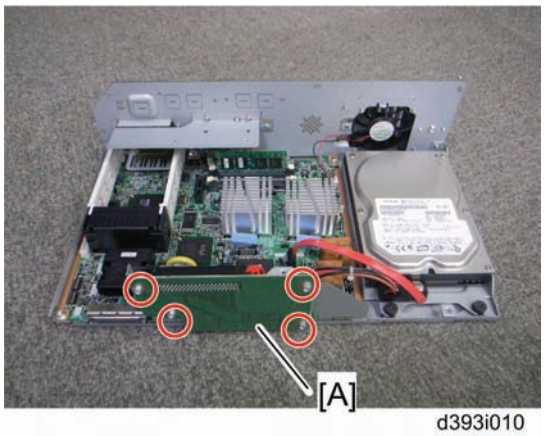

4. Attach the FCU I/F board [A] to the FCU I/F board bracket (x 4).

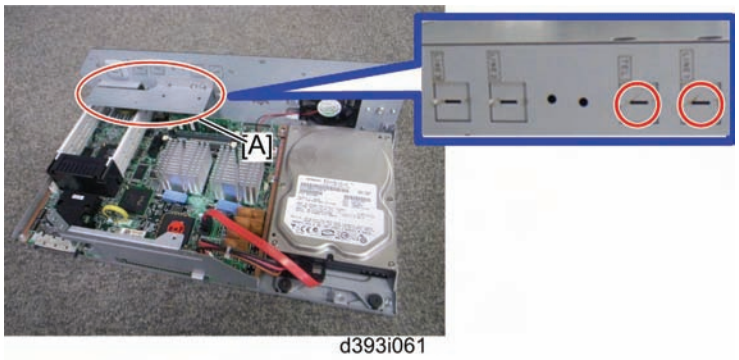

5. Attach the support bracket [A] to the controller box (x 2).
6. Remove the "TEL" and "LINE1" covers with a screw driver.

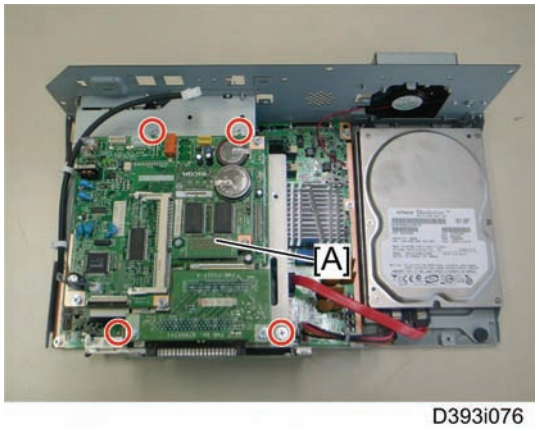

7. Install the FCU [A] to the controller board (x 4).

WWW.SERVICE-MANUAL.NET

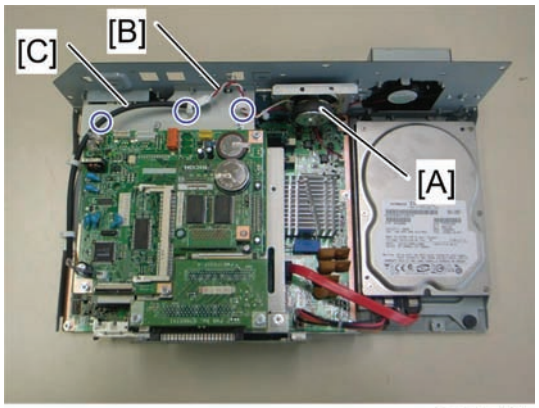

d393i077

8. Install the speaker [A] to the controller box (x 2) and connect the speaker cable [B] with the speaker relay cable [C] (x 3).

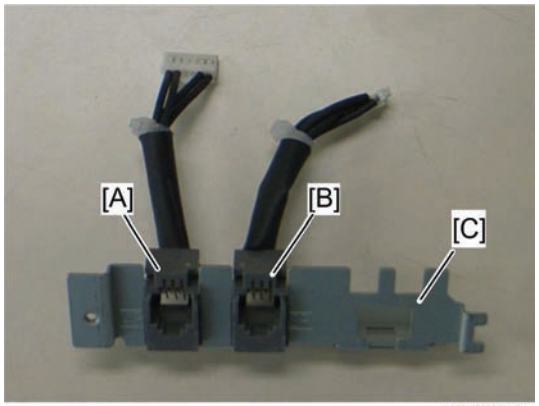

d393i094

9. Connect the two modular harnesses [A] (TEL), [B] (LINE1) to the modular bracket [C].

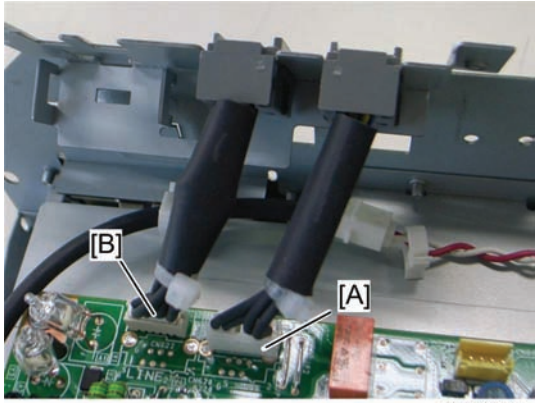

d393i095

10. Connect the two modular harnesses [A] (TEL), [B] (LINE1) to the FCU.

WWW.SERVICE-MANUAL.NET

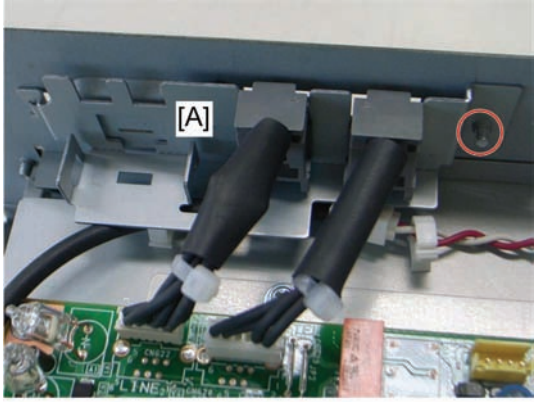

d393i096

11. Attach the modular bracket [A] to the controller box (x 1).

d393i068

12. Switch the MBU battery jumper switch [A] to "ON" position.

Note

- Make sure that the MBU board is firmly connected to the FCU.

13. Reinstall the controller box.
14. Attach the handset support bracket and handset bracket to the copier, and then connect the handset cord with the ferrite core to the "TEL" jack if you install the handset to the machine.

Note

- For details, refer to the "Hand Set Installation" in the Service Manual for the Fax Unit (D545).

WWW.SERVICE-MANUAL.NET

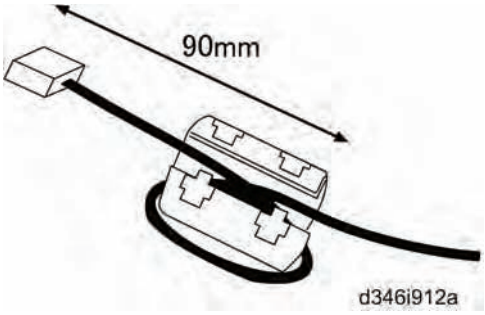

15. Attach the ferrite core to the telephone cord.
16. Connect the telephone cord to the "LINE 1" jack.

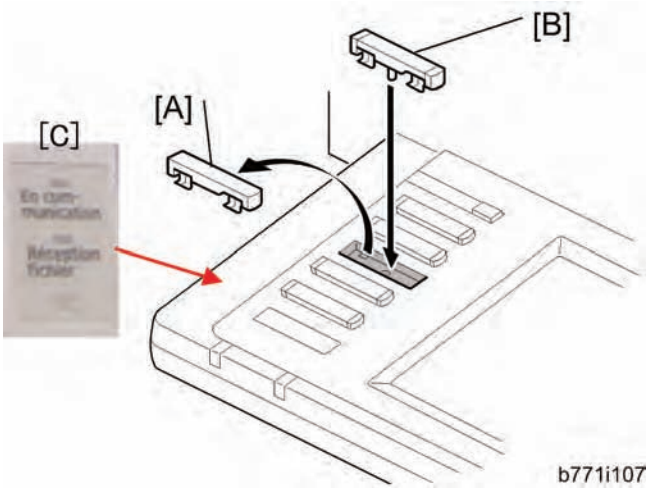

17. Replace bottom from the third key-slot cover [A] to the fax key [B].
18. Attach the Multi-Language Decals [C] (EU only).

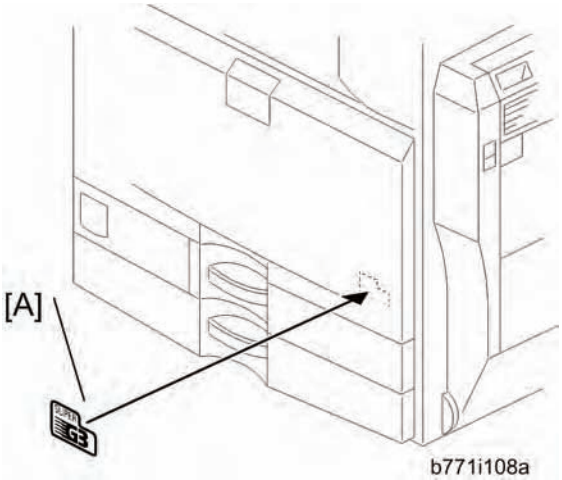

19. Attach the decal [A] (SUPER G3) to the front door.
20. Attach the serial number decal under the copier serial number decal on the rear cover of the machine.
21. Attach FCC decal on the rear cover of the machine (NA only).
22. Put the power plug into the outlet and turn on the main power of the machine.

WWW.SERVICE-MANUAL.NET

Note

- Make sure that the outlet is grounded.
- "SRAM formatted" shows on the operation panel after you have turned the main switch on. Turn the main switch off and on again for normal use.

23. Make sure that the date and time are correctly set.

WWW.SERVICE-MANUAL.NET

1.2 FAX UNIT OPTIONS

1.2.1 MEMORY UNIT (G578)

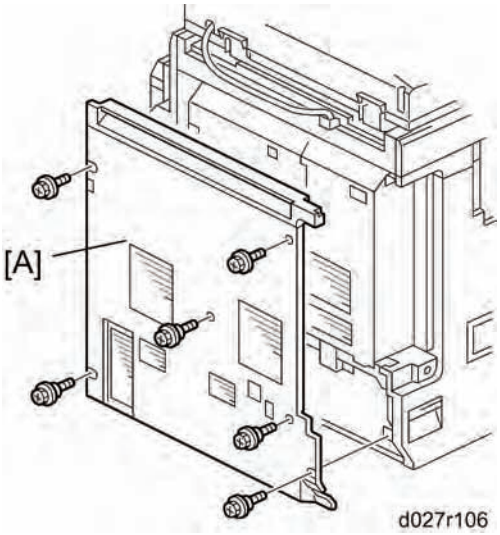

1. Rear cover [A] (x 6)

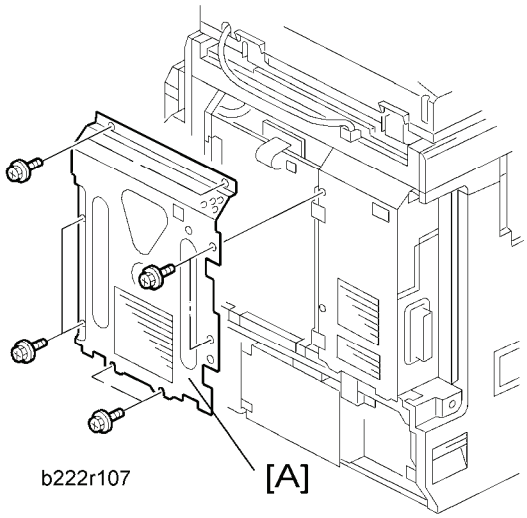

2. Controller box right cover [A] (x 8)

WWW.SERVICE-MANUAL.NET

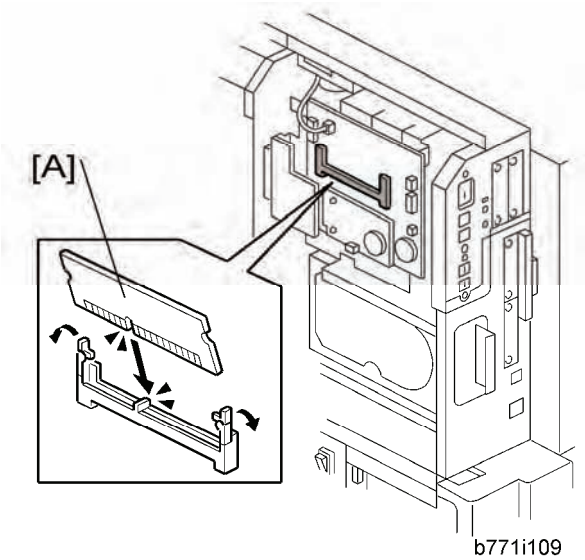

3. Install the memory option [A] on the FCU.
4. Re-aasemble the machine

WWW.SERVICE-MANUAL.NET

1.2.2 HANDSET (B433)

For D086/D087

Note

- The optional handset is available for the U.S. version only.

For the copier without any finisher

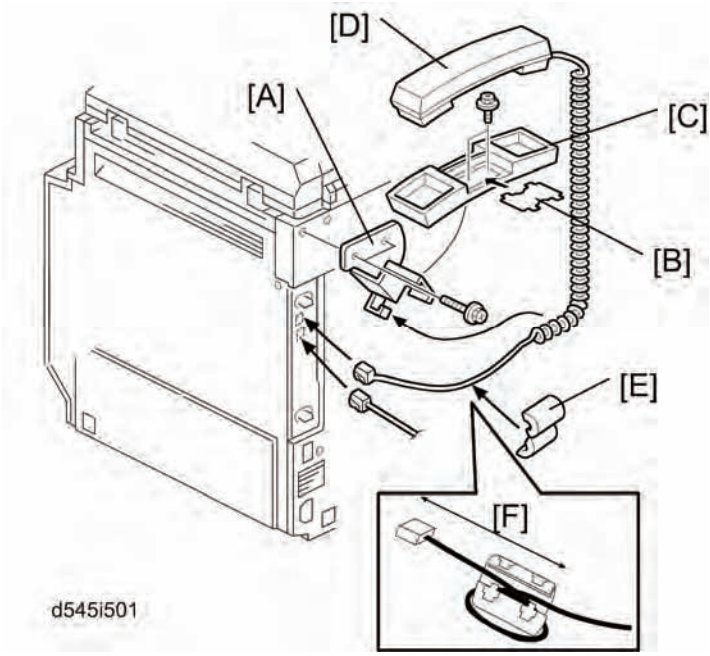

1. Make two holes in the scanner left cover.
2. Attach the bracket [A] enclosed with the fax unit (x 2: M3 x 12) as shown.
3. Remove the label [B] from the handset cradle [C]. Attach the cradle [C] to the bracket [A] (x 2: M3 x 8), and then replace the label [B].
4. Install the handset [D] on the cradle [C].
5. Attach the ferrite core [E] to the cable. The length [F] must be 90 mm.
6. Attach the two clamps [G] as shown.
7. Line the cable [H] as shown (x 2).
8. Connect the cable [H] to the "TEL" jack at the rear of the machine.

For the copier with a finisher

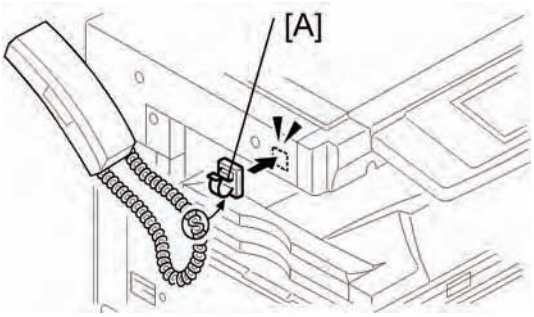

1. Do the handset installation procedure "for the copier without any finisher".

WWW.SERVICE-MANUAL.NET

2. Attach the clamp [A] to the scanner left cover.
3. Clamp the handset cord with clamp [A].

For D088/D089

Note

- The optional handset is available for the U.S. version only.

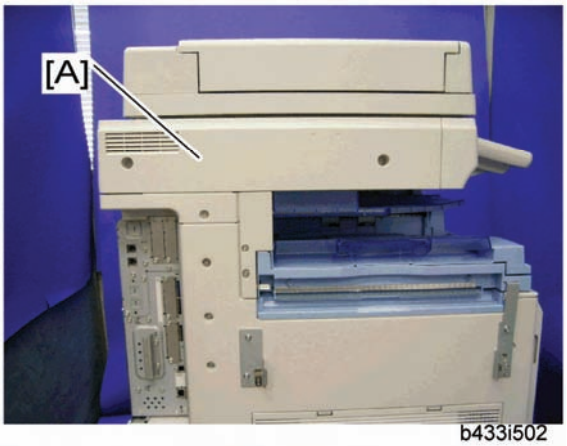

b433i502

1. Remove the scanner left cover [A] (x 2).

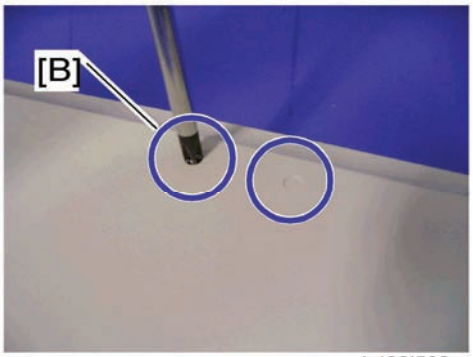

b433i503

2. Make two holes in the scanner left cover.

Note

- Drill a hole from the outside of the cover with a screwdriver.

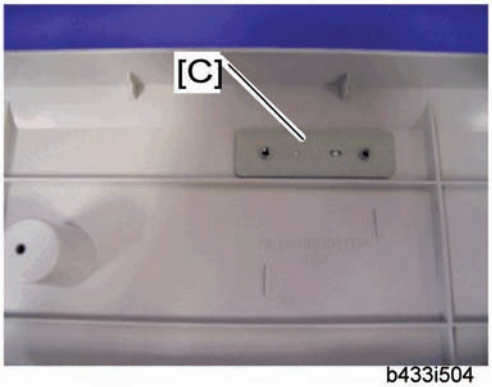

b433i504

3. Attach the hand set support bracket [C] inside the scanner left cover.

WWW.SERVICE-MANUAL.NET

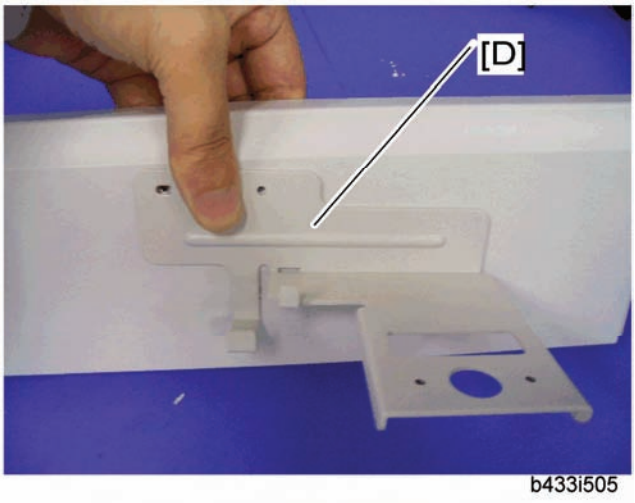

4. Hold the handset bracket [D] and handset support bracket (set inside the scanner left cover).
5. Secure the handset bracket [D] (x 2).

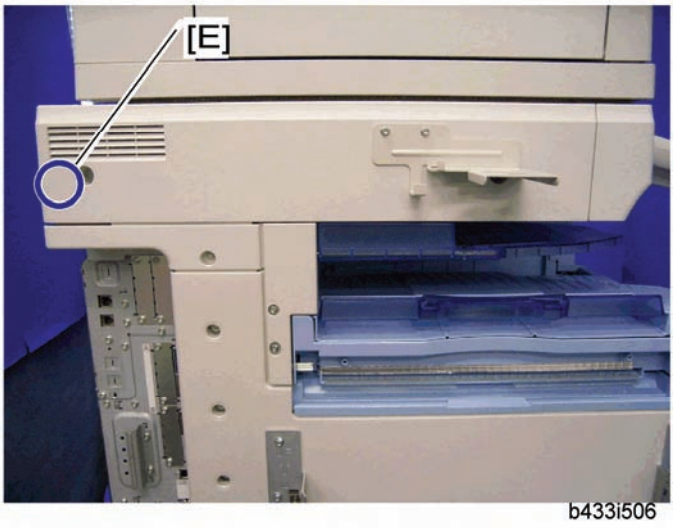

6. Install the scanner left cover on the machine.
7. Attach the clamp to the location [E].
8. Set the handset on the handset bracket.

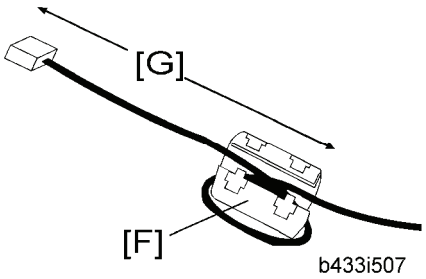

9. Put the ferrite core [F] on the handset cord as shown. The length [G] must be 90 mm.
10. Clamp the hand set cord.
11. Connect the handset cable to the "TEL" jack at the rear of the machine.

WWW.SERVICE-MANUAL.NET

1.3 G3 INTERFACE UNIT (D393)

1.3.1 COMPONENT CHECK

Check the quantity and condition of the components against the following list.

No.	Description	Q'ty
1	SG3 Interface Unit	1
2	Modular Bracket for SG3	1
3	Clamp	2
4	Clamp	4
5	Screw: M3x6	6
6	Ferrite Core	1
7	Telephone Cable (NA only)	1
8	Flat Cable	1
9	Harness	1
10	EMC Address Decal (EU only)	1
11	FCC Decal (NA only)	1

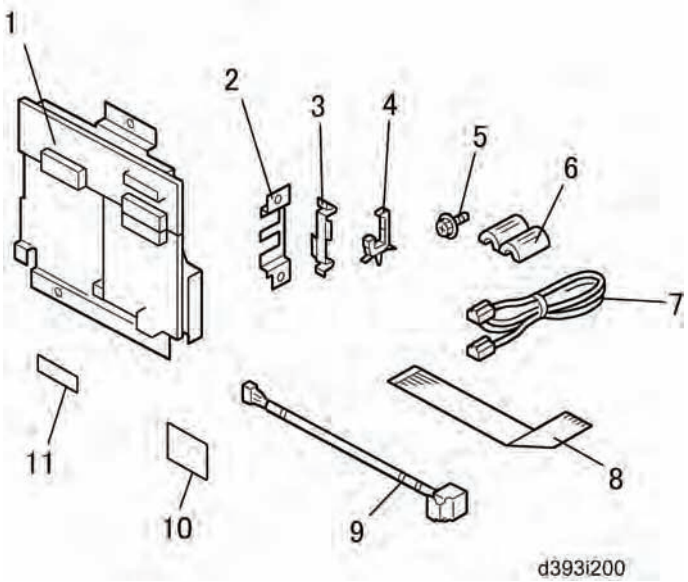

WWW.SERVICE-MANUAL.NET

1.3.2 INSTALLATION PROCEDURE

CAUTION

- **Before installing this optional unit:**
- Print out all data in the printer buffer.
- Turn off the main switch and disconnect the power cord and the network cable.

You can add two more SG3 boards to this model. Follow the procedures for adding the single SG3 board installation or double SG3 boards installation as a customer needs.

For Installing the single G3 Board

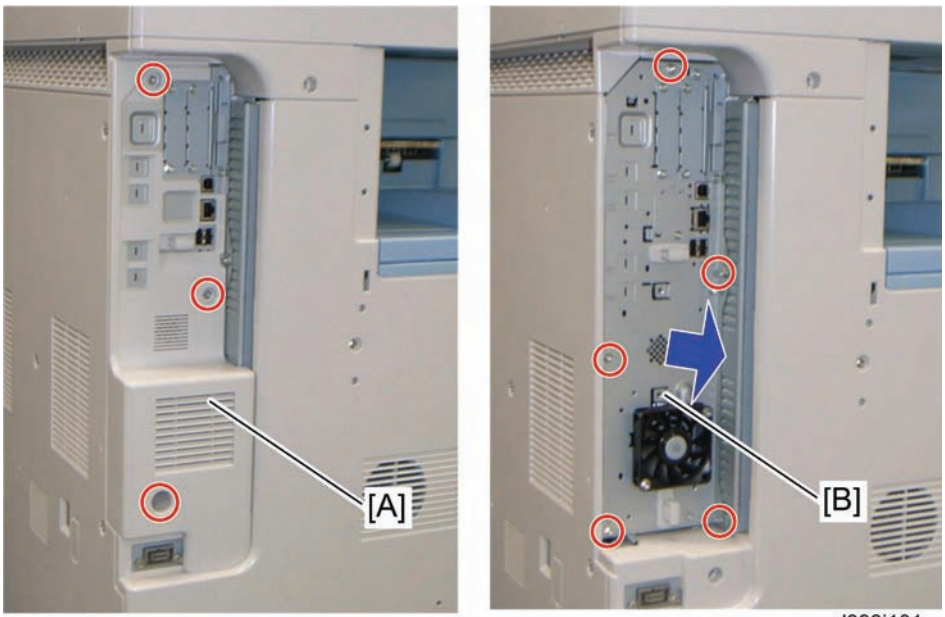

d393i101

1. Remove the controller box cover [A] (x 3).
2. Remove the controller box [B] (x 5).

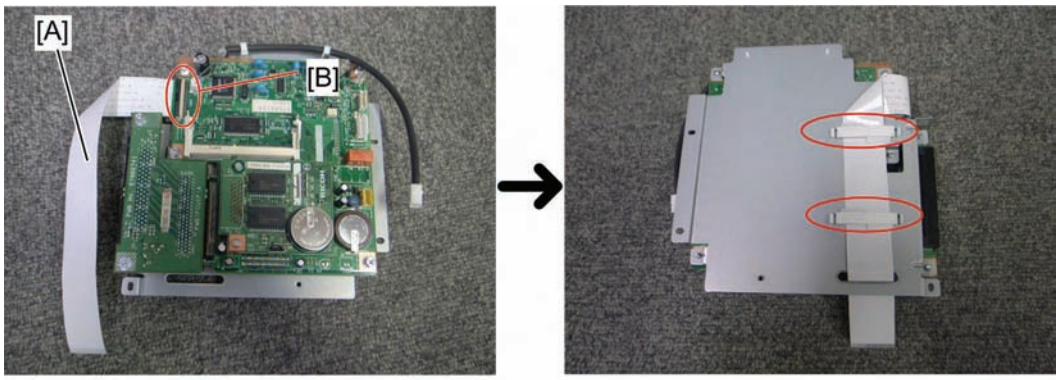

d393i011 d393i012

3. Attach one end (short length) of the flat cable [A] to the connector [B] of the FCU board.
4. Hold the flat cable with two clamps and pass the other end of the flat cable through the cutout as shown above.

WWW.SERVICE-MANUAL.NET

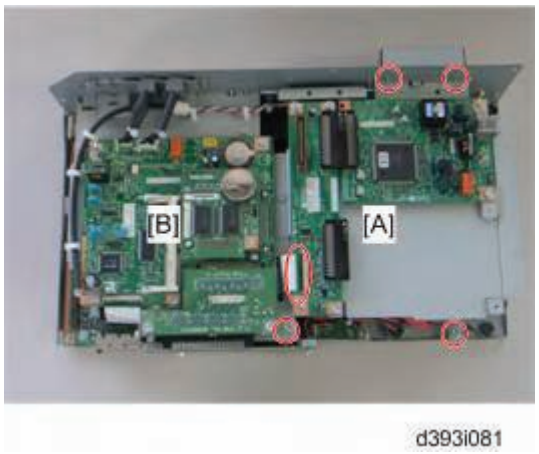

5. Connect the SG3 interface unit [A] to the controller board [B] with the flat cable (🖉 x 4).

6. Attach four clamps to the brackets.

7. Remove the "LINE2" cover with a screwdriver.

WWW.SERVICE-MANUAL.NET

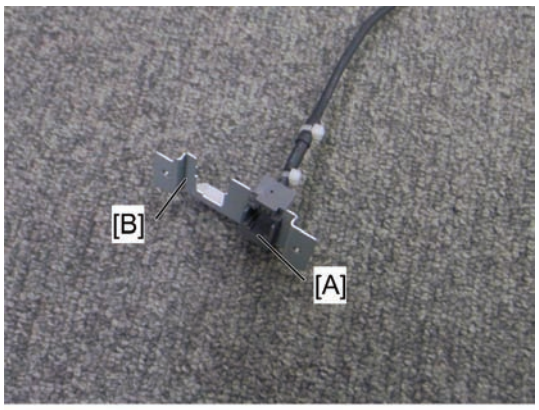

d393i047

8. Attach the socket of harness [A] (LINE2) to the modular bracket [B] for SG3.

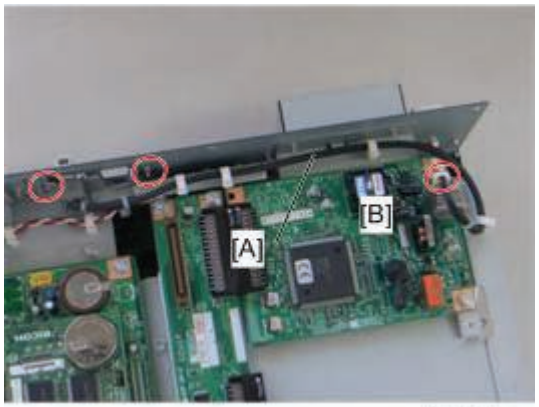

d393i091

9. Connect the harness [A] to the SG3 interface unit [B] (x 4).
10. Attach the modular bracket for SG3 to the controller box (x 2).
11. Reinstall the controller box.

For Installing the Double G3 Boards

d393i090

1. Remove one of SG3 boards from the SG3 interface units and then attach the SG3 board to the other SG3 interface unit (x 2).

WWW.SERVICE-MANUAL.NET

2. Remove the controller box.

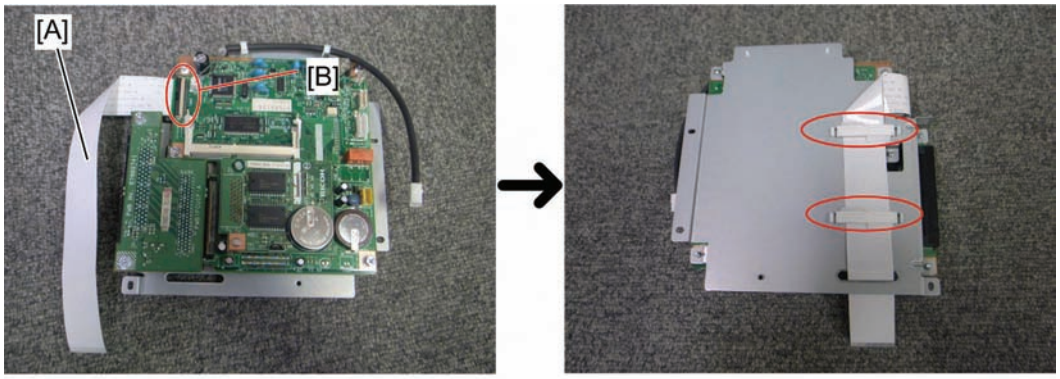

d393i011 d393i012

3. Attach one end (short length) of the flat cable [A] to the connector [B] of the FCU board.
4. Hold the flat cable with two clamps and pass the other end of the flat cable through the cutout as shown above.

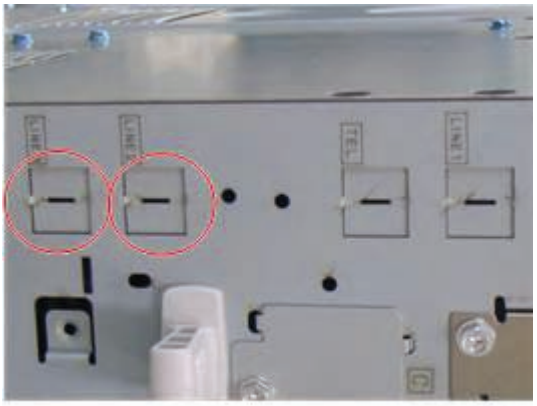

d393i088D

5. Remove the "LINE2" cover and "LINE3" cover with a screwdriver.

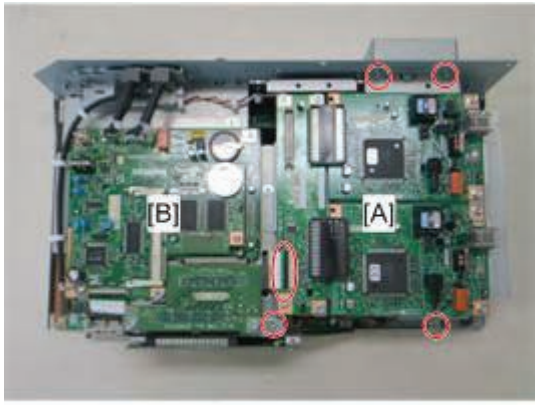

d393i081

6. Connect the SG3 interface unit [A] to the controller board [B] with the flat cable (x 4).

WWW.SERVICE-MANUAL.NET

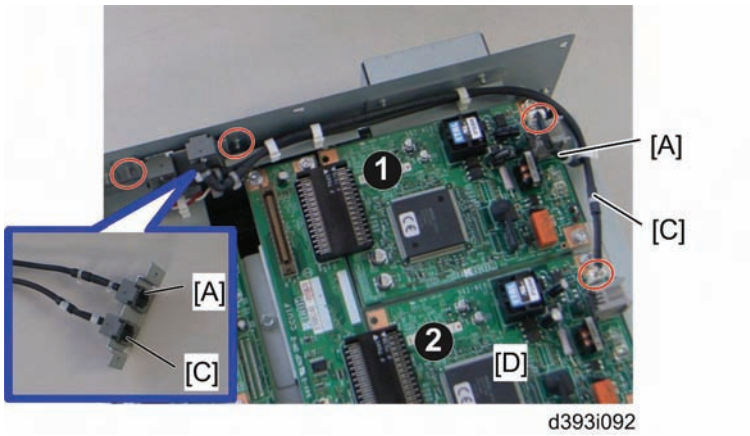

7. Attach the socket of harness [A] (LINE2) and the socket of harness [C] (LINE3) to the modular bracket for SG3.
8. Connect the harness [A] (LINE2) to the first SG3 board ❶ and the harness [C] (LINE3) to the second SG3 board ❷ (x 4).
9. Attach the modular bracket for SG3 to the controller box (x 2).
10. Reinstall the controller box.
11. Attach the ferrite core to the telephone cord for single SG3 board installation, or the two ferrite cores to the telephone cords for double-SG3 board installation.
12. Connect the telephone cord to the "LINE 2" jack for single SG3 board installation, or connect the telephone cords to the "LINE2" and "LINE3" jacks for double-SG3 board installation.
13. Connect the power plug to a power outlet and turn on the main power switch.
14. Enter the service mode. Set bit 1 of communication switch 16 to "1" (SP1-104-023).
15. Set bit 3 of communication switch 16 to "1" (SP1-104-023) if you have installed two SG3 boards.
16. Exit the service mode.
17. Turn the main power switch off and on.
18. Print out the system parameter list. Then check that "G3" shows as an option.
19. Set up and program the items required for PSTN-2 communications.

WWW.SERVICE-MANUAL.NET

2. REPLACEMENT AND ADJUSTMENT

2.1 FCU

1. When you replace the FCU board, remove the MBU board from the old FCU board and install it on the new FCU board.
2. Set the correct date and time with the User Tools: User Tools > System Settings > Timer Setting > Set Date/Time.

Note

- Do not turn off the battery switch (SW1).
- Do SP6101 to print the system parameters, and check the settings.

WWW.SERVICE-MANUAL.NET

3. TROUBLESHOOTING

3.1 ERROR CODES

If an error code occurs, retry the communication. If the same problem occurs, try to fix the problem as suggested below. Note that some error codes appear only in the error code display and on the service report.

Code	Meaning	Suggested Cause/Action
0-00	DIS/NSF not detected within 40 s of Start being pressed	▪ Check the line connection. ▪ The machine at the other end may be incompatible. ▪ Replace the FCU. ▪ Check for DIS/NSF with an oscilloscope. ▪ If the rx signal is weak, there may be a bad line.
0-01	DCN received unexpectedly	▪ The other party is out of paper or has a jammed printer. ▪ The other party pressed Stop during communication.
0-03	Incompatible modem at the other end	The other terminal is incompatible.
0-04	CFR or FTT not received after modem training	▪ Check the line connection. ▪ Try changing the tx level and/or cable equalizer settings. ▪ Replace the FCU. ▪ The other terminal may be faulty; try sending to another machine. ▪ If the rx signal is weak or defective, there may be a bad line. **Cross reference** Tx level - NCU Parameter 01 (PSTN) Cable equalizer - G3 Switch 07 (PSTN) Dedicated Tx parameters in Service Program

WWW.SERVICE-MANUAL.NET

Code	Meaning	Suggested Cause/Action
		Mode
0-05	Modem training fails even G3 shifts down to 2400 bps.	▪ Check the line connection. ▪ Try adjusting the tx level and/or cable equalizer. ▪ Replace the FCU. ▪ Check for line problems. **Cross reference** See error code 0-04.
0-06	The other terminal did not reply to DCS	▪ Check the line connection. ▪ Try adjusting the tx level and/or cable equalizer settings. ▪ Replace the FCU. ▪ The other end may be defective or incompatible; try sending to another machine. ▪ Check for line problems. **Cross reference** See error code 0-04.
0-07	No post-message response from the other end after a page was sent	▪ Check the line connection. ▪ Replace the FCU. ▪ The other end may have jammed or run out of paper. ▪ The other end user may have disconnected the call. ▪ Check for a bad line. ▪ The other end may be defective; try sending to another machine.

WWW.SERVICE-MANUAL.NET

Code	Meaning	Suggested Cause/Action
0-08	The other end sent RTN or PIN after receiving a page, because there were too many errors	▪ Check the line connection. ▪ Replace the FCU. ▪ The other end may have jammed, or run out of paper or memory space. ▪ Try adjusting the tx level and/or cable equalizer settings. ▪ The other end may have a defective modem/FCU; try sending to another machine. ▪ Check for line problems and noise. **Cross reference** ▪ Tx level - NCU Parameter 01 (PSTN) ▪ Cable equalizer - G3 Switch 07 (PSTN) ▪ Dedicated Tx parameters in Service Program Mode
0-14	Non-standard post message response code received	▪ Incompatible or defective remote terminal; try sending to another machine. ▪ Noisy line: resend. ▪ Try adjusting the tx level and/or cable equalizer settings. ▪ Replace the FCU. **Cross reference** See error code 0-08.
0-15	The other terminal is not capable of specific functions.	The other terminal is not capable of accepting the following functions, or the other terminal's memory is full. ▪ Confidential rx ▪ Transfer function ▪ SEP/SUB/PWD/SID
0-16	CFR or FTT not detected after modem training in confidential or transfer mode	▪ Check the line connection. ▪ Replace the FCU. ▪ Try adjusting the tx level and/or cable equalizer settings. ▪ The other end may have disconnected, or it may be defective; try calling another machine.

WWW.SERVICE-MANUAL.NET

Code	Meaning	Suggested Cause/Action
		▪ If the rx signal level is too low, there may be a line problem. **Cross reference** See error code 0-08.
0-20	Facsimile data not received within 6 s of retraining	▪ Check the line connection. ▪ Replace the FCU. ▪ Check for line problems. ▪ Try calling another fax machine. ▪ Try adjusting the reconstruction time for the first line and/or rx cable equalizer setting. **Cross reference** Reconstruction time - G3 Switch 0A, bit 6 Rx cable equalizer - G3 Switch 07 (PSTN)
0-21	EOL signal (end-of-line) from the other end not received within 5 s of the previous EOL signal	▪ Check the connections between the FCU and line. ▪ Check for line noise or other line problems. ▪ Replace the FCU. ▪ The remote machine may be defective or may have disconnected. **Cross reference** Maximum interval between EOLs and between ECM frames - G3 Bit Switch 0A, bit 4
0-22	The signal from the other end was interrupted for more than the acceptable modem carrier drop time (default: 200 ms)	▪ Check the line connection. ▪ Replace the FCU. ▪ Defective remote terminal. ▪ Check for line noise or other line problems. ▪ Try adjusting the acceptable modem carrier drop time. **Cross reference** Acceptable modem carrier drop time - G3 Switch 0A, bits 0 and 1

WWW.SERVICE-MANUAL.NET

Code	Meaning	Suggested Cause/Action
0-23	Too many errors during reception	▪ Check the line connection. ▪ Replace the FCU. ▪ Defective remote terminal ▪ Check for line noise or other line problems. ▪ Try asking the other end to adjust their tx level. ▪ Try adjusting the rx cable equalizer setting and/or rx error criteria. **Cross reference** Rx cable equalizer - G3 Switch 07 (PSTN) Rx error criteria - Communication Switch 02, bits 0 and 1
0-30	The other terminal did not reply to NSS(A) in AI short protocol mode	▪ Check the line connection. ▪ Try adjusting the tx level and/or cable equalizer settings. ▪ The other terminal may not be compatible. **Cross reference** Dedicated tx parameters - Section 4
0-32	The other terminal sent a DCS, which contained functions that the receiving machine cannot handle.	▪ Check the protocol dump list. ▪ Ask the other party to contact the manufacturer.
0-33	The data reception (not ECM) is not completed within 10 minutes.	▪ Check the line connection. ▪ The other terminal may have a defective modem/FCU.
0-52	Polarity changed during communication	▪ Check the line connection. Retry communication.
0-55	FCU does not detect the SG3.	▪ FCU firmware or board defective. ▪ SG3 firmware or board defective.
0-56	The stored message data exceeds the capacity of the mailbox in the SG3.	▪ SG3 firmware or board defective.

WWW.SERVICE-MANUAL.NET

Code	Meaning	Suggested Cause/Action
0-70	The communication mode specified in CM/JM was not available (V.8 calling and called terminal)	▪ The other terminal did not have a compatible communication mode (e.g., the other terminal was a V.34 data modem and not a fax modem.) ▪ A polling tx file was not ready at the other terminal when polling rx was initiated from the calling terminal.
0-74	The calling terminal fell back to T.30 mode, because it could not detect ANSam after sending CI.	▪ The calling terminal could not detect ANSam due to noise, etc. ▪ ANSam was too short to detect. ▪ Check the line connection and condition. ▪ Try making a call to another V.8/V.34 fax.
0-75	The called terminal fell back to T.30 mode, because it could not detect a CM in response to ANSam (ANSam timeout).	▪ The terminal could not detect ANSam. ▪ Check the line connection and condition. ▪ Try receiving a call from another V.8/V.34 fax.
0-76	The calling terminal fell back to T.30 mode, because it could not detect a JM in response to CM (CM timeout).	▪ The called terminal could not detect a CM due to noise, etc. ▪ Check the line connection and condition. ▪ Try making a call to another V.8/V.34 fax.
0-77	The called terminal fell back to T.30 mode, because it could not detect a CJ in response to JM (JM timeout).	▪ The calling terminal could not detect a JM due to noise, etc. ▪ A network that has narrow bandwidth cannot pass JM to the other end. ▪ Check the line connection and condition. ▪ Try receiving a call from another V.8/V.34 fax.
0-79	The called terminal detected CI while waiting for a V.21 signal.	▪ Check for line noise or other line problems. ▪ If this error occurs, the called terminal falls back to T.30 mode.

WWW.SERVICE-MANUAL.NET

Code	Meaning	Suggested Cause/Action
0-80	The line was disconnected due to a timeout in V.34 phase 2 – line probing.	▪ The guard timer expired while starting these phases. Serious noise, narrow bandwidth, or low signal level can cause these errors. If these errors happen at the transmitting terminal: ▪ Try making a call at a later time. ▪ Try using V.17 or a slower modem using dedicated tx parameters. ▪ Try increasing the tx level. ▪ Try adjusting the tx cable equalizer setting. If these errors happen at the receiving terminal: ▪ Try adjusting the rx cable equalizer setting. ▪ Try increasing the tx level. ▪ Try using V.17 or a slower modem if the same error is frequent when receiving from multiple senders.
0-81	The line was disconnected due to a timeout in V.34 phase 3 – equalizer training.	
0-82	The line was disconnected due to a timeout in the V.34 phase 4 – control channel start-up.	
0-83	The line was disconnected due to a timeout in the V.34 control channel restart sequence.	
0-84	The line was disconnected due to abnormal signaling in V.34 phase 4 – control channel start-up.	▪ The signal did not stop within 10 s. ▪ Turn off the machine, then turn it back on. ▪ If the same error is frequent, replace the FCU.
0-85	The line was disconnected due to abnormal signaling in V.34 control channel restart.	▪ The signal did not stop within 10 s. ▪ Turn off the machine, then turn it back on. ▪ If the same error is frequent, replace the FCU.
0-86	The line was disconnected because the other terminal requested a data rate using MPh that was not available in the currently selected symbol rate.	▪ The other terminal was incompatible. ▪ Ask the other party to contact the manufacturer.

WWW.SERVICE-MANUAL.NET

Code	Meaning	Suggested Cause/Action
0-87	The control channel started after an unsuccessful primary channel.	▪ The receiving terminal restarted the control channel because data reception in the primary channel was not successful. ▪ This does not result in an error communication.
0-88	The line was disconnected because PPR was transmitted/received 9 (default) times within the same ECM frame.	▪ Try using a lower data rate at the start. ▪ Try adjusting the cable equalizer setting.
2-11	Only one V.21 connection flag was received	▪ Replace the FCU.
2-12	Modem clock irregularity	▪ Replace the FCU.
2-13	Modem initialization error	▪ Turn off the machine, then turn it back on. ▪ Update the modem ROM. ▪ Replace the FCU.
2-23	JBIG compression or reconstruction error	▪ Turn off the machine, then turn it back on.
2-24	JBIG ASIC error	▪ Turn off the machine, then turn it back on.
2-25	JBIG data reconstruction error (BIH error)	▪ JBIG data error ▪ Check the sender's JBIG function. ▪ Update the MBU ROM.
2-26	JBIG data reconstruction error (Float marker error)	
2-27	JBIG data reconstruction error (End marker error)	
2-28	JBIG data reconstruction error (Timeout)	
2-29	JBIG trailing edge maker error	▪ FCU defective ▪ Check the destination device.

WWW.SERVICE-MANUAL.NET

Code	Meaning	Suggested Cause/Action
2-50	The machine resets itself for a fatal FCU system error	▪ If this is frequent, update the ROM, or replace the FCU.
2-51	The machine resets itself because of a fatal communication error	▪ If this is frequent, update the ROM, or replace the FCU.
2-53	Snd msg() in the manual task is an error because the mailbox for the operation task is full.	▪ The user did the same operation many times, and this gave too much load to the machine.
4-01	Line current was cut	▪ Check the line connector. ▪ Check for line problems. ▪ Replace the FCU.
4-10	Communication failed because of an ID Code mismatch (Closed Network) or Tel. No./CSI mismatch (Protection against Wrong Connections)	▪ Get the ID Codes the same and/or the CSIs programmed correctly, then resend. ▪ The machine at the other end may be defective.
5-10	DCR timer expired	▪ Replace the FCU.
5-20	Storage impossible because of a lack of memory	▪ Temporary memory shortage. ▪ Test the SAF memory.
5-21	Memory overflow	
5-23	Print data error when printing a substitute rx or confidential rx message	▪ Test the SAF memory. ▪ Ask the other end to resend the message.
5-25	SAF file access error	▪ Replace an SD card or HDD. ▪ Replace the FCU.

WWW.SERVICE-MANUAL.NET

Code	Meaning	Suggested Cause/Action
6-00	G3 ECM - T1 time out during reception of facsimile data	▪ Try adjusting the rx cable equalizer. ▪ Replace the FCU.
6-01	G3 ECM - no V.21 signal was received	
6-02	G3 ECM - EOR was received	
6-04	G3 ECM - RTC not detected	▪ Check the line connection. ▪ Check for a bad line or defective remote terminal. ▪ Replace the FCU.
6-05	G3 ECM - facsimile data frame not received within 18 s of CFR, but there was no line fail	▪ Check the line connection. ▪ Check for a bad line or defective remote terminal. ▪ Replace the FCU. ▪ Try adjusting the rx cable equalizer **Cross reference** ▪ Rx cable equalizer - G3 Switch 07 (PSTN)
6-06	G3 ECM - coding/decoding error	▪ Defective FCU. ▪ The other terminal may be defective.
6-08	G3 ECM - PIP/PIN received in reply to PPS.NULL	▪ The other end pressed Stop during communication. ▪ The other terminal may be defective.
6-09	G3 ECM - ERR received	▪ Check for a noisy line. ▪ Adjust the tx levels of the communicating machines. ▪ See code 6-05.

WWW.SERVICE-MANUAL.NET

Code	Meaning	Suggested Cause/Action
6-10	G3 ECM - error frames still received at the other end after all communication attempts at 2400 bps	▪ Check for line noise. ▪ Adjust the tx level (use NCU parameter 01 or the dedicated tx parameter for that address). ▪ Check the line connection. ▪ Defective remote terminal.
6-21	V.21 flag detected during high speed modem communication	▪ The other terminal may be defective or incompatible.
6-22	The machine resets the sequence because of an abnormal handshake in the V.34 control channel	▪ Check for line noise. ▪ If the same error occurs frequently, replace the FCU. ▪ Defective remote terminal.
6-99	V.21 signal not stopped within 6 s	▪ Replace the FCU.
13-17	SIP user name registration error	▪ Double registration of the SIP user name. ▪ Capacity for user-name registration in the SIP server is not sufficient.
13-18	SIP server access error	▪ Incorrect initial setting for the SIP server. ▪ Defective SIP server.
13-24	SIP authentication error	▪ Registered password in the device does not match the password in the SIP server.
13-25	Network I/F setting error	▪ IPV4 is not active in the active protocol setting. ▪ IP address of the device is not registered.
13-26	Network I/F setting error at power on	▪ Active protocol setting does not match the I/F setting for SIP server. ▪ IP address of the device is not registered.
13-27	IP address setting error	▪ IP address of the device is not registered.

WWW.SERVICE-MANUAL.NET

Code	Meaning	Suggested Cause/Action
14-00	SMTP Send Error	▪ Error occurred during sending to the SMTP server. Occurs for any error other than 14-01 to 16. For example, the mail address of the system administrator is not registered.
14-01	SMTP Connection Failed	▪ Failed to connect to the SMTP server (timeout) because the server could not be found. ▪ The PC is not ready to transfer files. ▪ SMTP server not functioning correctly. ▪ The DNS IP address is not registered. ▪ Network not operating correctly. ▪ Destination folder selection not correct.
14-02	No Service by SMTP Service (421)	▪ SMTP server operating incorrectly, or the destination for direct SMTP sending is not correct. ▪ Contact the system administrator and check that the SMTP server has the correct settings and operates correctly. ▪ Contact the system administrator for direct SMTP sending and check the sending destination.
14-03	Access to SMTP Server Denied (450)	▪ Failed to access the SMTP server because the access is denied. ▪ SMTP server operating incorrectly. Contact the system administrator to determine if there is a problem with the SMTP server and to check that the SMTP server settings are correct. ▪ Folder send destination is incorrect. Contact the system administrator to determine that the SMTP server settings and path to the server are correct. ▪ Device settings incorrect. Confirm that the user name and password settings are correct. ▪ Direct SMTP destination incorrect. Contact the

WWW.SERVICE-MANUAL.NET

Code	Meaning	Suggested Cause/Action
		system administrator to determine if there is a problem at the destination at that the settings at the destination are correct.
14-04	Access to SMTP Server Denied (550)	▪ SMTP server operating incorrectly ▪ Direct SMTP sending not operating correctly
14-05	SMTP Server HDD Full (452)	▪ Failed to access the SMTP server because the HDD on the server is full. ▪ Insufficient free space on the HDD of the SMTP server. Contact the system administrator and check the amount of space remaining on the SMTP server HDD. ▪ Insufficient free space on the HDD where the destination folder is located. Contact the system administrator and check the amount of space remaining on the HDD where the target folder is located. ▪ Insufficient free space on the HDD at the target destination for SMTP direct sending. Contact the system administrator and check the amount of space remaining on the target HDD.
14-06	User Not Found on SMTP Server (551)	▪ The designated user does not exist. ▪ The designated user does not exist on the SMTP server. ▪ The designated address is not for use with direct SMTP sending.
14-07	Data Send to SMTP Server Failed (4XX)	▪ Failed to access the SMTP server because the transmission failed. ▪ PC not operating correctly. ▪ SMTP server operating incorrectly ▪ Network not operating correctly. ▪ Destination folder setting incorrect. ▪ Direct SMTP sending not operating correctly.

WWW.SERVICE-MANUAL.NET

Code	Meaning	Suggested Cause/Action
14-08	Data Send to SMTP Server Failed (5XX)	▪ Failed to access the SMTP server because the transmission failed. ▪ SMTP server operating incorrectly ▪ Destination folder setting incorrect. ▪ Direct SMTP sending not operating correctly. ▪ Software application error.
14-09	Authorization Failed for Sending to SMTP Server	▪ POP-Before-SMTP or SMTP authorization failed. ▪ Incorrect setting for file transfer
14-10	Addresses Exceeded	▪ Number of broadcast addresses exceeded the limit for the SMTP server.
14-11	Buffer Full	▪ The send buffer is full so the transmission could not be completed. Buffer is full due to using Scan-to-Email while the buffer is being used send mail at the same time.
14-12	Data Size Too Large	▪ Transmission was cancelled because the detected size of the file was too large.
14-13	Send Cancelled	▪ Processing is interrupted because the user pressed Stop.
14-14	Security Locked File Error	▪ Update the software because of the defective software.
14-15	Mail Data Error	▪ The transmitting a mail is interrupted via DCS due to the incorrect data. ▪ Update the software because of the defective software.
14-16	Maximum Division Number Error	▪ When a mail is divided for the mail transmission and the division number of a mail are more than the specified number, the mail transmission is interrupted. ▪ Update the software because of the defective software.

WWW.SERVICE-MANUAL.NET

Code	Meaning	Suggested Cause/Action
14-17	Incorrect Ticket	▪ Update the software because of the defective software.
14-18	Access to MCS File Error	▪ The access to MCS file is denied due to the no permission of access. ▪ Update the software because of the defective software.
14-30	MCS File Creation Failed	Failed to create the MCS file because: ▪ The number of files created with other applications on the Document Server has exceeded the limit. ▪ HDD is full or not operating correctly. ▪ Software error.
14-31	UFS File Creation Failed	UFS file could not be created: ▪ Not enough space in UFS area to handle both Scan-to-Email and IFAX transmission. ▪ HDD full or not operating correctly. ▪ Software error.
14-32	Cancelled the Mail Due to Error Detected by NFAX	▪ Error detected with NFAX and send was cancelled due to a software error.
14-33	No Mail Address For the Machine	▪ Neither the mail address of the machine nor the mail address of the network administrator is registered.
14-34	Address designated in the domain for SMTP sending does not exist	▪ Operational error in normal mail sending or direct SMTP sending. ▪ Check the address selected in the address book for SMTP sending. ▪ Check the domain selection.
14-50	Mail Job Task Error	Due to an FCU mail job task error, the send was cancelled: ▪ Address book was being edited during creation of the notification mail. ▪ Software error.

WWW.SERVICE-MANUAL.NET

Code	Meaning	Suggested Cause/Action
14-51	UCS Destination Download Error	Not even one return notification can be downloaded: ▪ The address book was being edited. ▪ The number for the specified destination does not exist (it was deleted or edited after the job was created).
14-60	Send Cancel Failed	▪ The cancel operation by the user failed to cancel the send operation.
14-61	Notification Mail Send Failed for All Destinations	▪ All addresses for return notification mail failed.
14-62	Transmission Error due to the existence of zero line page	▪ When the 0 line page exists in received pages with G3 communication, the transmission is interrupted.
15-01	POP3/IMAP4 Server Not Registered	▪ At startup, the system detected that the IP address of the POP3/IMAP4 server has not been registered in the machine.
15-02	POP3/IMAP4 Mail Account Information Not Registered	▪ The POP3/IMAP4 mail account has not been registered.
15-03	Mail Address Not Registered	▪ The mail address has not been registered.
15-10	DCS Mail Receive Error	▪ Error other than 15-11 to 15-18.
15-11	Connection Error	The DNS or POP3/IMAP4 server could not be found: ▪ The IP address for DNS or POP3/IMAP4 server is not stored in the machine. ▪ The DNS IP address is not registered. ▪ Network not operating correctly.

WWW.SERVICE-MANUAL.NET

Code	Meaning	Suggested Cause/Action
15-12	Authorization Error	POP3/IMAP4 send authorization failed: ▪ Incorrect IFAX user name or password. ▪ Access was attempted by another device, such as the PC. ▪ POP3/IMAP4 settings incorrect.
15-13	Receive Buffer Full	▪ Occurs only during manual reception. Transmission cannot be received due to insufficient buffer space. The buffer is being used for mail send or Scan-to-Email.
15-14	Mail Header Format Error	▪ The mail header is not standard format. For example, the Date line description is incorrect.
15-15	Mail Divide Error	▪ The e-mail is not in standard format. There is no boundary between parts of the e-mail, including the header.
15-16	Mail Size Receive Error	▪ The mail cannot be received because it is too large.
15-17	Receive Timeout	▪ May occur during manual receiving only because the network is not operating correctly.
15-18	Incomplete Mail Received	▪ Only one portion of the mail was received.
15-31	Final Destination for Transfer Request Reception Format Error	▪ The format of the final destination for the transfer request was incorrect.
15-39	Send/Delivery Destination Error	The transmission cannot be delivered to the final destination: ▪ Destination file format is incorrect. ▪ Could not create the destination for the file transmission.
15-41	SMTP Receive Error	▪ Reception rejected because the transaction exceeded the limit for the “Auth. E-mail RX” setting.

WWW.SERVICE-MANUAL.NET

Code	Meaning	Suggested Cause/Action
15-42	Off Ramp Gateway Error	▪ The delivery destination address was specified with Off Ramp Gateway OFF.
15-43	Address Format Error	▪ Format error in the address of the Off Ramp Gateway.
15-44	Addresses Over	▪ The number of addresses for the Off Ramp Gateway exceeded the limit of 30.
15-61	Attachment File Format Error	▪ The attached file is not TIFF format.
15-62	TIFF File Compatibility Error	Could not receive transmission due to: ▪ Resolution error ▪ Image of resolution greater than 200 dpi without extended memory. ▪ Resolution is not supported. ▪ Page size error ▪ The page size was larger than A3. ▪ Compression error ▪ File was compressed with other than MH, MR, or MMR.
15-63	TIFF Parameter Error	The TIFF file sent as the attachment could not be received because the TIFF header is incorrect: ▪ The TIFF file attachment is a type not supported. ▪ The TIFF file attachment is corrupted. ▪ Software error.
15-64	TIFF Decompression Error	The file received as an attachment caused the TIFF decompression error: ▪ The TIFF format of the attachment is corrupted. ▪ Software error.

WWW.SERVICE-MANUAL.NET

Code	Meaning	Suggested Cause/Action
15-71	Not Binary Image Data	▪ The file could not be received because the attachment was not binary image data.
15-73	MDN Status Error	▪ Could not find the Disposition line in the header of the Return Receipt, or there is a problem with the firmware.
15-74	MDN Message ID Error	▪ Could not find the Original Message ID line in the header of the Return Receipt, or there is a problem with the firmware.
15-80	Mail Job Task Read Error	▪ Could not receive the transmission because the destination buffer is full and the destination could not be created (this error may occur when receiving a transfer request or a request for notification of reception).
15-81	Repeated Destination Registration Error	▪ Could not repeat receive the transmission because the destination buffer is full and the destination could not be created (this error may occur when receiving a transfer request or a request for notification of reception).
15-91	Send Registration Error	Could not receive the file for transfer to the final destination: ▪ The format of the final destination or the transfer destination is incorrect. ▪ Destinations are full so the final and transfer destinations could not be created.
15-92	Memory Overflow	▪ Transmission could not be received because memory overflowed during the transaction.

WWW.SERVICE-MANUAL.NET

Code	Meaning	Suggested Cause/Action
15-93	Memory Access Error	▪ Transaction could not complete due to a malfunction of SAF memory.
15-94	Incorrect ID Code	▪ The machine rejected an incoming e-mail for transfer request, because the ID code in the incoming e-mail did not match the ID code registered in the machine.
15-95	Transfer Station Function	▪ The machine rejected an incoming e-mail for transfer because the transfer function was unavailable.
22-00	Original length exceeded the maximum scan length	▪ Divide the original into more than one page. ▪ Check the resolution used for scanning. Lower the scan resolution if possible. ▪ Add optional page memory.
22-01	Memory overflow while receiving	▪ Wait for the files in the queue to be sent. ▪ Delete unnecessary files from memory. ▪ Transfer the substitute reception files to an another fax machine, if the machine's printer is busy or out of order. ▪ Add an optional SAF memory card or hard disk.
22-02	Tx or rx job stalled due to line disconnection at the other end	▪ The job started normally but did not finish normally; data may or may not have been received fully. ▪ Restart the machine.
22-04	The machine cannot store received data in the SAF	▪ Update the ROM ▪ Replace the FCU.

WWW.SERVICE-MANUAL.NET

Code	Meaning	Suggested Cause/Action
22-05	No G3 parameter confirmation answer	▪ Defective FCU board or firmware.
23-00	Data read timeout during construction	▪ Restart the machine. ▪ Replace the FCU.
25-00	The machine software resets itself after a fatal transmission error occurred	▪ Update the ROM ▪ Replace the FCU.
F0-xx	V.34 modem error	▪ Replace the FCU.
F6-xx	SG3 modem error	▪ Update the SG3 modem ROM. ▪ Replace the SG3 board. ▪ Check for line noise or other line problems. ▪ Try communicating another V.8/V.34 fax.

WWW.SERVICE-MANUAL.NET

3.2 IFAX TROUBLESHOOTING

Use the following procedures to determine whether the machine or another part of the network is causing the problem.

Communication Route	Item	Action [Remarks]
General LAN	1. Connection with the LAN	▪ Check that the LAN cable is connected to the machine. ▪ Check that the LEDs on the hub are lit.
	2. LAN activity	Check that other devices connected to the LAN can communicate through the LAN.
Between IFAX and PC	1. Network settings on the PC	▪ Check the network settings on the PC. [Is the IP address registered in the TCP/IP properties in the network setup correct? Check the IP address with the administrator of the network.]
	2. Check that PC can connect with the machine	▪ Use the “ping” command on the PC to contact the machine. [At the MS-DOS prompt, type ping then the IP address of the machine, then press Enter.]
	3. LAN settings in the machine	▪ Check the LAN parameters ▪ Check if there is an IP address conflict with other PCs. [Use the “Network” function in the User Tools. If there is an IP address conflict, inform the administrator.]

WWW.SERVICE-MANUAL.NET

Communication Route	Item	Action [Remarks]
Between machine and e-mail server	1. LAN settings in the machine	▪ Check the LAN parameters ▪ Check if there is an IP address conflict with other PCs. [Use the “Network” function in the User Tools. If there is an IP address conflict, inform the administrator.]
	2. E-mail account on the server	▪ Make sure that the machine can log into the e-mail server. ▪ Check that the account and password stored in the server are the same as in the machine. [Ask the administrator to check.]
	3. E-mail server	▪ Make sure that the client devices which have an account in the server can send/receive e-mail. [Ask the administrator to check. Send a test e-mail with the machine’s own number as the destination. The machine receives the returned e-mail if the communication is performed successfully.]

WWW.SERVICE-MANUAL.NET

Communication Route	Item	Action [Remarks]
Between e-mail server and internet	1. E-mail account on the Server	▪ Make sure that the PC can log into the e-mail server. ▪ Check that the account and password stored in the server are the same as in the machine. [Ask the administrator to check.]
	2. E-mail server	▪ Make sure that the client devices which have an account in the server can send/receive e-mail. [Ask the administrator to check. Send a test e-mail with the machine's own number as the destination. The machine receives the returned e-mail if the communication is performed successfully.]
	3. Destination e-mail address	▪ Make sure that the e-mail address is actually used. ▪ Check that the e-mail address contains no incorrect characters such as spaces.
	4. Router settings	▪ Use the "ping" command to contact the router. ▪ Check that other devices connected to the router can sent data over the router. [Ask the administrator of the server to check.]
	5. Error message by e-mail from the network of the destination.	▪ Check whether e-mail can be sent to another address on the same network, using the application e-mail software. ▪ Check the error e-mail message. [Inform the administrator of the LAN.]

WWW.SERVICE-MANUAL.NET

3.3 IP-FAX TROUBLESHOOTING

3.3.1 IP-FAX TRANSMISSION

Cannot send by IP Address/Host Name

Check Point		Action
1	LAN cable connected?	Check the LAN cable connection.
2	Specified IP address/host name correct?	Check the IP address/host name.
3	Firewall/NAT is installed?	Cannot breach the firewall. Send by using another method (Fax, Internet Fax)
4	Transmission sent manually?	Manual sending not supported.
5	IP address of local machine registered?	Register the IP address.
6	Remote terminal port number setting other than 1720?	Send by specifying the port number.
7	Specified port number correct?	Confirm the port number of the remote fax.
8	DNS server registered when host name specified?	Contact the network administrator.
9	Remote fax a T.38 terminal?	Check whether the remote fax is a T38 terminal.
10	Remote fax switched off or busy?	Check that the remote fax is switched on.

WWW.SERVICE-MANUAL.NET

Check Point		Action
11	Network bandwidth too narrow?	Request the network administrator to increase the bandwidth.
		Raise the delay level. IPFAX SW 01 Bit 0 to 3
		IP-Fax bandwidth is the same as the DCS speed. Set IP-Fax SW00 Bit 6 to 1.
12	Remote fax cancelled transmission?	Check whether the remote fax cancelled the transmission.

WWW.SERVICE-MANUAL.NET

Cannot send via VoIP Gateway

Check Point		Action
1	LAN cable connected?	Check the LAN cable connection.
2	VoIP Gateway T.38 standard?	Contact the network administrator.
3	VoIP Gateway installed correctly?	Contact the network administrator.
4	VoIP Gateway power switched on?	Contact the network administrator.
5	Is the IP address/host name of the specified Gateway correct?	Check the IP address/host name.
6	Number of the specified fax correct?	Check the remote fax number.
7	Firewall/NAT is installed?	Cannot breach the firewall. Send by using another method (Fax, Internet Fax)
8	Transmission sent manually?	Manual sending not supported.
9	IP address of local fax registered?	Register the IP address.
10	DNS registered when host name specified?	Contact the network administrator.
11	Remote fax a G3 fax?	Check that the remote fax is a G3 fax.
12	G3 fax is connected to VoIP gateway?	Check that G3 fax is connected.
13	Remote G3 fax turned on?	Check that G3 fax is switched on.
14	Network bandwidth too narrow?	Request the network administrator to increase the bandwidth.
		Raise the network delay level. IPFAX SW 01 Bit 0 to 3
		IP-Fax bandwidth is the same as the DCS speed. Set IP-Fax SW00 Bit 6 to 1.

WWW.SERVICE-MANUAL.NET

Cannot send by Alias Fax number.

Check Point		Action
1	LAN cable connected?	Check the LAN cable connection.
2	Number of specified Alias fax correct?	Confirm the Alias of the remote fax. Error Code: 13-14
3	Firewall/NAT installed?	Cannot breach the firewall. Send by using another method (Fax, Internet Fax)
4	Transmission sent manually?	Manual sending not supported.
5	Gatekeeper installed correctly?	Contact the network administrator.
6	Gatekeeper power switched on?	Contact the network administrator.
7	IP address/host name of Gatekeeper correct?	Check the IP address/host name.
8	DNS server registered when Gatekeeper host name specified?	Contact the network administrator.
9	Enable H.323 SW is set to on?	Check the settings. See User Parameter SW 34 Bit 0
10	IP address of local fax registered?	Register the IP address of the local fax.
11	Alias number of local fax registered?	Register the Alias number of the local fax.
12	Remote fax registered in Gatekeeper?	Contact the network administrator.
13	Remote fax a T.38 terminal?	Check whether the remote fax is a T38 terminal.
14	Remote fax switched off or busy?	Contact the network administrator.

WWW.SERVICE-MANUAL.NET

Check Point		Action
15	Network bandwidth too narrow?	Request the system administrator to increase the bandwidth.
		Raise the delay level. IPFAX SW 01 Bit 0 to 3
		Lower the modem transmission baud rate. IPFAX SW 05
16	Remote fax cancelled transmission?	Check whether the remote fax cancelled the transmission.

WWW.SERVICE-MANUAL.NET

3.3.2 IP-FAX RECEPTION

Cannot receive via IP Address/Host Name.

Check Point		Action
1	LAN cable connected?	Check the LAN cable connection.
2	Firewall/NAT is installed?	Cannot breach the firewall. Send by using another method (Fax, Internet Fax)
3	IP address of local fax registered?	Register the IP address.
4	Port number specified at remote sender fax (if required)?	Request the sender to specify the port number.
5	Specified port number correct (if required)?	Request the sender to check the port number.
6	DNS server registered when host name specified on sender side?	Contact the network administrator. Note ▪ The sender machine displays this error code if the sender fax is a Ricoh model.
7	Network bandwidth too narrow?	Request the system administrator to increase the bandwidth.
		Lower the start modem reception baud rate on the receiving side. IPFAX SW06
8	Remote fax cancelled transmission?	Check whether the remote fax cancelled the transmission.

WWW.SERVICE-MANUAL.NET

Cannot receive by VoIP Gateway.

Check Point		Action
1	LAN cable connected?	Check the LAN cable connection.
2	Firewall/NAT is installed?	Cannot breach the firewall. Request the remote fax to send by using another method (Fax, Internet Fax)
3	VoIP Gateway installed correctly?	Contact the network administrator.
4	VoIP Gateway power switched on?	Contact the network administrator.
5	IP address/host name of specified VoIP Gateway correct on sender's side?	Request the remote fax to check the IP address/host name.
6	DNS server registered when host name specified on sender side?	Contact the network administrator.
7	Network bandwidth too narrow?	Request the network administrator to increase the bandwidth.
8	G3 fax connected?	Check that G3 fax is connected.
9	G3 fax power switched on?	Check that G3 fax is switched on.

WWW.SERVICE-MANUAL.NET

Cannot receive by Alias Fax number.

Check Point		Action
1	LAN cable connected?	Check the LAN cable connection.
2	Firewall/NAT is installed?	Cannot the breach firewall. Request the remote fax to send by using another method (Fax, Internet Fax)
3	Gatekeeper installed correctly?	Contact the network administrator. Note ▪ The sender machine displays this error code when the sender fax is a Ricoh model.
4	Power to Gatekeeper switched on?	Contact the network administrator. Note ▪ The sender machine displays this error code when the sender fax is a Ricoh model.
5	IP address/host name of Gatekeeper correct on the sender's side?	Request the sender to check the IP address/host name. Note ▪ The sender machine displays this error code when the sender fax is a Ricoh model.
6	DNS server registered when Gatekeeper host name specified on sender's side?	Contact the network administrator. Note ▪ The sender machine displays this error code when the sender fax is a Ricoh model.

WWW.SERVICE-MANUAL.NET

Check Point		Action
7	Enable H.323 SW is set to on?	Request the sender to check the settings. User Parameter SW 34 Bit 0 Note ▪ Only if the remote sender fax is a Ricoh fax.
8	Local fax IP address registered?	Register the IP address.
9	Local fax Alias number registered?	Register the Alias number.
10	Network bandwidth too narrow?	Request the system administrator to increase the bandwidth.
		Lower the start modem reception baud rate on the receiving side. IPFAX SW06
11	Remote fax cancelled transmission?	Check whether the remote fax cancelled the transmission.
12	Local fax registered in Gatekeeper?	Contact the network administrator. Note ▪ The sender machine displays this error code when the sender fax is a Ricoh model.

WWW.SERVICE-MANUAL.NET

4. SERVICE TABLE

4.1 BEFOREHAND

CAUTION

- Never turn off the main power switch when the power LED is lit or flashing. To avoid damaging the hard disk or memory, press the operation power switch to switch the power off, wait for the power LED to go off, and then switch the main power switch off.

Note

- The main power LED (⏻) lights or flashes while the platen cover or ARDF is open, while the main machine is communicating with a facsimile or the network server, or while the machine is accessing the hard disk or memory for reading or writing data.

WWW.SERVICE-MANUAL.NET

4.2 SERVICE TABLES

4.2.1 SP1-XXX (BIT SWITCHES)

☛ Bit Switches

1	Mode No.		Function
101	System Switch		
	001 – 032	00 – 1F	Change the bit switches for system settings for the fax option ☛ "Bit Switches"
102	Ifax Switch		
	001 – 016	00 – 0F	Change the bit switches for internet fax settings for the fax option ☛ "Bit Switches"
103	Printer Switch		
	001 – 016	00 – 0F	Change the bit switches for printer settings for the fax option ☛ "Bit Switches"
104	Communication Switch		
	001 – 032	00 – 1F	Change the bit switches for communication settings for the fax option ☛ "Bit Switches"
105	G3-1 Switch		
	001 – 016	00 – 0F	Change the bit switches for the protocol settings of the standard G3 board ☛ "Bit Switches"
106	G3-2 Switch		
	001 – 016	00 – 0F	Change the bit switches for the protocol settings of the optional G3 board ☛ "Bit Switches"

WWW.SERVICE-MANUAL.NET

107	G3-3 Switch		
	001 – 016	00 – 0F	Change the bit switches for the protocol settings of the optional G3 board ☛ "Bit Switches"
108	G4 Internal Switch		
	001 – 032	00 – 1F	**Not used** (Do not change the bit switches)
109	G4 Parameter Switch		
	001 – 016	00 – 0F	**Not used** (Do not change the bit switches)
111	IP fax Switch		
	001 – 016	00 – 0F	Change the bit switches for optional IP fax parameters ☛ "Bit Switches"

WWW.SERVICE-MANUAL.NET

4.2.2 SP2-XXX (RAM DATA)

2	Mode No.		Function
101	RAM Read/Write		
	001		Change RAM data for the fax board directly. ☛ "Service RAM Addresses"
102	Memory Dump		
	001	G3-1 Memory Dump	Print out RAM data for the fax board. ☛ "Service RAM Addresses"
	002	G3-2 Memory Dump	Print out RAM data for the optional SG3 board.
	003	G3-3 Memory Dump	Print out RAM data for the optional SG3 board.
	004	G4 Memory Dump	Not used
103	G3-1 NCU Parameters		
	001 – 023	CC, 01 – 22	NCU parameter settings for the standard G3 board. ☛ "NCU Parameters"
104	G3-2 NCU Parameters		
	001 – 023	CC, 01 – 22	NCU parameter settings for the optional G3 board. ☛ "NCU Parameters"
105	G3-3 NCU Parameters		
	001 – 023	CC, 01 – 22	NCU parameter settings for the optional G3 board. ☛ "NCU Parameters"

WWW.SERVICE-MANUAL.NET

4.2.3 SP3-XXX (TEL LINE SETTINGS)

3	Mode No.		Function
101	Service Station		
	001	Fax Number	Enter the fax number of the service station.
	002	Select Line	Select the line type.
102	Serial Number		
	000		Enter the fax unit's serial number.
103	PSTN-1 Port Settings		
	001	Select Line	Select the line type setting for the G3-1 line. If the machine is installed on a PABX line, select "PABX", "PABX(GND)" or "PABX(FLASH)".
	002	PSTN Access Number	Enter the PSTN access number for the G3-1 line.
	003	Memory Lock Disabled	Not used
104	PSTN-2 Port Settings		
	001	Select Line	Select the line setting for the G3-2 line. If the machine is installed on a PABX line, select "PABX", "PABX(GND)" or "PABX(FLASH)".
	002	PSTN Access Number	Enter the PSTN access number for the G3-2 line.
	003	Memory Lock Disabled	Not used
	004	Transmission Disabled	If you turn this SP on, the machine does not send any fax messages on the G3-2 line.

WWW.SERVICE-MANUAL.NET

105	PSTN-3 Port Settings		
	001	Select Line	Select the line setting for the G3-3 line. If the machine is installed on a PABX line, select “PABX”, “PABX(GND)” or “PABX(FLASH)”.
	002	PSTN Access Number	Enter the PSTN access number for the G3-3 line.
	003	Memory Lock Disabled	Not used
	004	Transmission Disabled	If you turn this SP on, the machine does not send any fax messages on the G3-3 line.
106	ISDN Port Settings		
	001	Select Line	**Not used** (Do not change the settings.)
	002	PSTN Access Number	
	003	Memory Lock Disabled	
106	004	Transmission Disabled	

WWW.SERVICE-MANUAL.NET

107	IPFAX Port Settings		
	001	H323 Port	Sets the H323 port number.
	002	SIP Port	Sets the SIP port number.
	003	RAS Port	Sets the RAS port number.
	004	Gatekeeper port	Sets the Gatekeeper port number.
	005	T.38 Port	Sets the T.38 port number.
	006	SIP Server Port	Sets the SIP port number.
	007	IPFAX Protocol Priority	Select "H323" or "SIP".
201	FAX SW		
	001 – 032	00 – 1F	

WWW.SERVICE-MANUAL.NET

4.2.4 SP4-XXX (ROM VERSIONS)

4	Mode No.		Function
101	001	FCU ROM Version	Displays the FCU ROM version.
102	001	Error Codes	Displays the latest 64 fax error codes.
103	001	G3-1 ROM Version	Displays the G3-1 modem version.
104	001	G3-2 ROM Version	Displays the G3-2 modem version.
105	001	G3-3 ROM Version	Displays the G3-3 modem version.
106	001	G4 ROM Version	**Not used** (Do not change the settings.)
107	001	Charge ROM Version	**Not used** (Do not change the settings.)

4.2.5 SP5-XXX (INITIALIZING)

5	Mode No.	Function
101	Initialize SRAM	
	000	Initializes the bit switches and user parameters, user data in the SRAM, files in the SAF memory, and clock.
102	Erase All Files	
	000	Erases all files stored in the SAF memory.
103	Reset Bit Switches	
	000	Resets the bit switches and user parameters.
104	Factory setting	
	000	Resets the bit switches and user parameters, user data in the SRAM and files in the SAF memory.
105	Initialize All Bit Switches	
	000	Initializes all the current bit switch settings.

WWW.SERVICE-MANUAL.NET

106	Initialize Security Bit Switches	
	000	Initializes only the security bit switches. If you select automatic output/display for the user parameter switches, the security settings are initialized.

4.2.6 SP6-XXX (REPORTS)

6	Mode No.		Function
101	System Parameter List		
	000	-	Touch the “ON” button to print the system parameter list.
102	Service Monitor Report		
	000	-	Touch the “ON” button to print the service monitor report.
103	G3 Protocol Dump List		
	001	G3 All Communications	Prints the protocol dump list of all communications for all G3 lines.
	002	G3-1 (All Communications)	Prints the protocol dump list of all communications for the G3-1 line.
	003	G3-1 (1 Communication)	Prints the protocol dump list of the last communication for the G3-1 line.
	004	G3-2 (All Communications)	Prints the protocol dump list of all communications for the G3-2 line.
	005	G3-2 (1 Communication)	Prints the protocol dump list of the last communication for the G3-2 line.
	006	G3-3 (All Communications)	Prints the protocol dump list of all communications for the G3-3 line.
	007	G3-3 (1 Communication)	Prints the protocol dump list of the last communication for the G3-3 line.

WWW.SERVICE-MANUAL.NET

104	G4 Protocol Dump List		
	001	Dch + Bch 1	**Not used** (Do not change the settings.)
	002	Dch	
	003	Bch 1 Link Layer	
	004	Dch Link Layer	
	005	Dch +Bch 2	
	006	Bch 2 Link Layer	
105	All Files print out		
	000	-	Prints out all the user files in the SAF memory, including confidential messages. Note ▪ Do not use this function, unless the customer is having trouble printing confidential messages or recovering files stored using the memory lock feature.
106	Journal Print out		
	001	All Journals	The machine prints all the communication records on the report.
	002	Specified Date	The machine prints all communication records after the specified date.
107	Log List Print out		
	001	All log files	These log print out functions are for designer use only.
	002	Printer	
	003	SC/TRAP Stored	
	004	Decompression	
	005	Scanner	
	006	JOB/SAF	

WWW.SERVICE-MANUAL.NET

	007	Reconstruction	
	008	JBIG	
	009	Fax Driver	
	010	G3CCU	
	011	Fax Job	
	012	CCU	
	013	Scanner Condition	
108	IP Protocol Dump List		
	001	All Communications	Prints the protocol dump list of all communications for the IP fax line.
	002	1 Communication	Prints the protocol dump list of the last communication for the IP fax line.

WWW.SERVICE-MANUAL.NET

4.2.7 SP7-XXX (TEST MODES)

These are the test modes for PTT approval.

7	Function
101	G3-1 Modem Tests
102	G3-1 DTMF Tests
103	Ringer Test
104	G3-1 V34 (S2400baud)
105	G3-1 V34 (S2800baud)
106	G3-1 V34 (S3000baud)
107	G3-1 V34 (S3200baud)
108	G3-1 V34 (S3429baud)
109	Recorded Message Test
110	G3-2 Modem Tests
111	G3-2 DTMF Tests
112	G3-2 V34 (S2400baud)
113	G3-2 V34 (S2800baud)
114	G3-2 V34 (S3000baud)
115	G3-2 V34 (S3200baud)
116	G3-2 V34 (S3429baud)
117	G3-3 Modem Tests
118	G3-3 DTMF Tests
119	G3-3 V34 (S2400baud)
120	G3-3 V34 (S2800baud)
121	G3-3 V34 (S3000baud)

WWW.SERVICE-MANUAL.NET

122	G3-3 V34 (S3200baud)
123	G3-3 V34 (S3429baud)
124	IG3-1 Modem Tests - **Not used**
125	IG3-1 DTMF Tests - **Not used**
126	IG3-1 V34 (S2400baud) - **Not used**
127	IG3-1 V34 (S2800baud) - **Not used**
128	IG3-1 V34 (S3000baud) - **Not used**
129	IG3-1 V34 (S3200baud) - **Not used**
130	IG3-1 V34 (S3429baud) - **Not used**
131	IG3-2 Modem Tests - **Not used**
132	IG3-2 DTMF Tests - **Not used**
133	IG3-2 V34 (S2400baud) - **Not used**
134	IG3-2 V34 (S2800baud) - **Not used**
135	IG3-2 V34 (S3000baud) - **Not used**
136	IG3-2 V34 (S3200baud) - **Not used**
137	IG3-2 V34 (S3429baud) - **Not used**

WWW.SERVICE-MANUAL.NET

4.3 BIT SWITCHES

Note

- Do not adjust a bit switch or use a setting that is described as "Not used", as this may cause the machine to malfunction or to operate in a manner that is not accepted by local regulations. Such bits are for use only in other areas, such as Japan.

Default settings for bit switches are not listed in this manual. Refer to the System Parameter List printed by the machine.

4.3.1 SYSTEM SWITCHES

System Switch 00 (SP No. 1-101-001)		
No	**Function**	**Comments**
0	Dedicated transmission parameter programming 0: Disabled 1: Enabled	Set this bit to 1 before changing any dedicated transmission parameters. This setting is automatically reset to "0" after turning off and on.
1	Not used	Do not change
2	Technical data printout on the Journal 0: Disabled 1: Enabled	1: Instead of the personal name, the following data are listed on the Journal for each G3 communication.
	Example: **0000 32V34 288/264 L0100 03 04** (1) (2)(3) (4) (5) (6) (7) (8) (1): EQM value (Line quality data). A larger number means more errors. (2): Symbol rate (V.34 only) (3): Final modem type used (4): Starting data rate (for example, 288 means 28.8 kbps) (5): Final data rate (6): Rx revel (see below for how to read the rx level) (7): Total number of error lines that occurred during non-ECM reception. (8): Total number of burst error lines that occurred during non-ECM reception. Note	

WWW.SERVICE-MANUAL.NET

	▪ EQM and rx level are fixed at "FFFF" in tx mode. ▪ The seventh and eighth numbers are fixed at "00" for transmission records and ECM reception records.	
	Rx level calculation Example: **0000 32V34 288/264 L0100 03 04** (1) (2)(3) (4) (5) (6) (7) (8) The four-digit hexadecimal value (N) after "L" indicates the rx level. The **high** byte is given first, followed by the **low** byte. Divide the decimal value of N by -16 to get the rx level. In the above example, the decimal value of N (= 0100 [H]) is 256. So, the actual rx level is 256/-16 = -16 dB	
3	Not used	Do not change this setting.
4	Line error mark print 0: OFF, 1: ON (print)	When "1" is selected, a line error mark is printed on the printout if a line error occurs during reception. This shows an error position in ECM off mode.
5	G3/G4 communication parameter display 0: Disabled 1: Enabled	This is a fault-finding aid. The LCD shows the key parameters (see "G3 Communication Parameters" below this table). This is normally disabled because it cancels the CSI display for the user. Be sure to reset this bit to "0" after testing.
6	Protocol dump list output after each communication 0: Off 1: On	This is only used for communication troubleshooting. It shows the content of the transmitted facsimile protocol signals. Always reset this bit to 0 after finishing testing. If system switch 09 bit 6 is at "1", the list is only printed if there was an error during the communication.
7	Not used	Do not change the setting.

WWW.SERVICE-MANUAL.NET

G3 Communication Parameters

Modem rate	336: 33600 bps 312: 31200 bps 288: 28800 bps 264: 26400 bps 240: 24000 bps 216: 21600 bps 192: 19200 bps 168: 16800 bps 144: 14400 bps 120: 12000 bps 96: 9600 bps 72: 7200 bps 48: 4800 bps 24: 2400 bps
Resolution	S: Standard (8 x 3.85 dots/mm) D: Detail (8 x 7.7 dots/mm) F: Fine (8 x 15.4 dots/mm) SF: Superfine (16 x 15.4 dots/mm) 21: Standard (200 x 100 dpi) 22: Detail (200 x 200 dpi) 44: Superfine (400 x 400 dpi)
Compression mode	MMR: MMR compression MR: MR compression MH: MH compression JBO: JBIG compression (Optional mode) JBB: JBIG compression (Basic mode)
Communication mode	ECM: With ECM NML: With no ECM
Width and reduction	A4: A4 (8.3"), no reduction B4: B4 (10.1"), no reduction A3: A3 (11.7"), no reduction
I/O rate	0: 0 ms/line 5: 5 ms/line 10: 10 ms/line 20: 20 ms/line 25: 2.5 ms/line 40: 40 ms/line Note ▪ "40" is displayed while receiving a fax message using AI short protocol.

WWW.SERVICE-MANUAL.NET

System Switch 01 - Not used (Do not change the factory settings.)

System Switch 02 (SP No. 1-101-003)				
No	**Function**			**Comments**
0	Not used			Do not change these settings.
2	Forced reset after transmission stalls 0: Off 1: On			With this setting on, the machine resets itself automatically if a transmission stalls and fails to complete the job.
3	Not used			Do not change these settings.
4	File retention time 0: Depends on User Parameter 24 [18(H)] 1: No limit			1: A file that had a communication error will not be erased unless the communication is successful.
5	Not used			Do not change this setting.
6-7	Memory read/write by RDS			(0,0): All RDS systems are always locked out. (0,1), (1,0): Normally, RDS systems are locked out, but the user can temporarily switch RDS on to allow RDS operations to take place. RDS will automatically be locked out again after a certain time, which is stored in System Switch 03. Note that if an RDS operation takes place, RDS will not switch off until this time limit has expired. (1,1): At any time, an RDS system can access the machine.
	Bit 7	Bit 6	Setting	
	0	0	Always disabled	
	0	1	User selectable	
	1	0	User selectable	
	1	1	Always enabled	

WWW.SERVICE-MANUAL.NET

System Switch 03 (SP No. 1-101-004)		
No	**Function**	**Comments**
0 to 7	Length of time that RDS is temporarily switched on when bits 6 and 7 of System Switch 02 are set to "User selectable"	00 - 99 hours (BCD). This setting is only valid if bits 6 and 7 of System Switch 02 are set to "User selectable". The default setting is 24 hours.

System Switch 04 (SP No. 1-101-005)		
No	**Function**	**Comments**
0-2	Not used	Do not change these settings.
3	Printing dedicated tx parameters on Quick/Speed Dial Lists 0: Disabled 1: Enabled	1: Each Quick/Speed dial number on the list is printed with the dedicated tx parameters (10 bytes each). The first 10 bytes of data are the programmed dedicated tx parameters; 34 bytes of data are printed (the other 24 bytes have no use for service technicians).
4-7	Not used	Do not change these settings.

System Switch 05 - Not used (Do not change the factory settings.)

System Switch 06 (SP No. 1-101-007)		
No	**Function**	**Comments**
0 to 7	Margin setting for Create Margin Transmission	71 to 99 (BCD) %. This setting determines the reduction ratio when the user uses the Create Margin Transmission feature. Default setting: 1001 0011 (93%)

System Switch 07 - Not used (Do not change the factory settings.)
System Switch 08 - Not used (Do not change the factory settings.)

WWW.SERVICE-MANUAL.NET

System Switch 09 (SP No. 1-101-010)		
No	**Function**	**Comments**
0	Addition of image data from confidential transmissions on the transmission result report 0: Disabled 1: Enabled	If this feature is enabled, the top half of the first page of confidential messages will be printed on transmission result reports.
1	Print timing of communication reports on the Journal when no image data was exchanged. 0: After DCS/NSS communication (default), 1: After polling	0: Journal is printed only when image data is sent. 1: Journal is printed when any data is sent.
2	Automatic error report printout 0: Disabled 1: Enabled	0: Error reports will not be printed. 1: Error reports will be printed automatically after failed communications.
3	Printing of the error code on the error report 0: No 1: Yes	1: Error codes are printed on the error reports. This can be used for detecting an error which rarely occurs.
4	Not used	Do not change this setting.
5	Power failure report 0: Disabled 1: Enabled (default)	1: A power failure report will be automatically printed after the power is switched on if a fax message disappeared from the memory when the power was turned off last. **NOTE:** If "0" is selected, no reports are printed and no one may recognize that fax data is gone due to a power failure.

WWW.SERVICE-MANUAL.NET

6	Conditions for printing the protocol dump list 0: Print for all communications 1: Print only when there is a communication error	This switch becomes effective only when system switch 00 bit 6 is set to 1. 1: Set this bit to 1 when you wish to print a protocol dump list only for communications with errors. **NOTE:** The memory size is limited. Use this bit switch only when some log reports are necessary.
7	Priority given to various types of remote terminal ID when printing reports 0: RTI > CSI > Dial label > Tel. number 1: Dial label > Tel. number > RTI > CSI	This bit determines which set of priorities the machine uses when listing remote terminal names on reports. Dial Label: The name stored, by the user, for the Quick/Speed Dial number.

System Switch 0A (SP No. 1-101-011)		
No	**Function**	**Comments**
0	Automatic port selection 0: Disabled, 1: Enabled	When "1" is selected, a suitable port is automatically selected if the selected port is not used. **NOTE:** This bit is useful if all communication lines at a customer site are not same quality.
1-2	Not used	Do not change these settings.
3	Continuous polling reception 0: Disabled 1: Enabled	This feature allows a series of stations to be polled in a continuous cycle. This will continue until the polling reception file is erased. The dialing interval is the same as memory transmission.
4	Dialing on the ten-key pad when the external telephone is off-hook 0: Disabled 1: Enabled	0: Prevents dialing from the ten-key pad while the external telephone is off-hook. Use this setting when the external telephone is not by the machine, or if a wireless telephone is

WWW.SERVICE-MANUAL.NET

		connected as an external telephone. 1: The user can dial on the machine's ten-key pad when the handset is off-hook.
5	On hook dial 0: Disabled 1: Enabled	0: On hook dial is disabled.
6-7	Not used	Do not change the factory settings

System Switch 0B - Not used (Do not change the factory settings.)
System Switch 0C - Not used (Do not change the factory settings.)
System Switch 0D - Not used (Do not change the factory settings.)

System Switch 0E (SP No. 1-101-015)		
No	**Function**	**Comments**
0-1	Not used	Do not change the settings.
2	Enable/disable for direct sending selection 0: Direct sending off 1: Direct sending on	Direct sending cannot operate when the capture function is on during sending. Setting this switch to "1" enables direct sending without capture. Setting this switch to "0" masks the direct sending function on the operation panel so direct sending with ScanRouter cannot be selected.

WWW.SERVICE-MANUAL.NET

3	Action when the external handset goes off-hook 0: Manual tx and rx operation 1: Memory tx and rx operation (the display remains the same)	0: Manual tx is possible while the external handset is off-hook. However, manual tx during handset off-hook may not be sent to a correct direction. Manual tx is not possible. 1: The display stays in standby mode even when the external handset is used, so that other people can use the machine for memory tx operation. Note that manual tx and rx are not possible with this setting.
4-7	Not used	Do not change these settings.

System Switch 0F (SP No. 1-101-016)			
No	**Function**		**Comments**
0 to 7	Country/area code for functional settings (Hex)		This country/area code determines the factory settings of bit switches and RAM addresses. However, it has no effect on the NCU parameter settings and communication parameter RAM addresses. Cross reference NCU country code: SP No. 2-103-001 for G3-1 SP No. 2-104-001 for G3-2 SP No. 2-105-001 for G3-3
	00: France	11: USA	
	01: Germany	12: Asia	
	02: UK	13: Japan	
	03: Italy	14: Hong Kong	
	04: Austria	15: South Africa	
	05: Belgium	16: Australia	
	06: Denmark	17: New Zealand	
	07: Finland	18: Singapore	
	08: Ireland	19: Malaysia	
	09: Norway	1A: China	
	0A: Sweden	1B: Taiwan	
	0B: Switz.	1C: Korea	
	0C: Portugal	20: Turkey	

WWW.SERVICE-MANUAL.NET

	0D: Holland	21: Greece	
	0E: Spain	22: Hungary	
	0F: Israel	23: Czech	
	10: ---	24: Poland	

System Switch 10 (SP No. 1-101-017)		
No	**Function**	**Comments**
0-7	Threshold memory level for parallel memory transmission	Threshold = N x 128 KB + 256 KB N can be between 00 - FF(H) Default setting: 02(H) = 512 KB

WWW.SERVICE-MANUAL.NET

System Switch 11 (SP No. 1-101-018)		
No	**Function**	**Comments**
0	TTI printing position 0: Superimposed on the page data 1: Printed before the data leading edge	Change this bit to 1 if the TTI overprints information that the customer considers to be important (G3 transmissions). **NOTE:** If "1" is selected, it is possible that sent data is printed on two sheets of paper.
1	TSI (G3) printing position 0: Superimposed on the page data 1: Printed before the data leading edge	Change this bit to 1 if the TSI (G3) overprints information that the customer considers to be important.
2	Not used	Do not change the factory settings.
3	TTI used for broadcasting 0: The TTIs selected for each Quick/Speed dial are used 1: The same TTI is used for all destinations	1: The TTI (TTI_1 or TTI_2) which is selected for all destinations during broadcasting.
4-7	Not used	Do not change the factory settings.

System Switch 12 (SP No. 1-101-019)		
No	**Function**	**Comments**
0-7	TTI printing position in the main scan direction	TTI: 08 to 92 (BCD) mm Input even numbers only. This setting determines the print start position for the TTI from the left edge of the paper. If the TTI is moved too far to the right, it may overwrite the file number which is on the top right of the page. On an A4 page, if the TTI is moved over by more than 50 mm, it may overwrite the page number.

WWW.SERVICE-MANUAL.NET

System Switch 13 - Not used (do not change these settings)
System Switch 14 - Not used (do not change these settings)

System Switch 15 (SP No. 1-101-022)				
No	**Function**			**Comments**
0	Not used			Do not change the settings.
1	Going into the Energy Saver mode automatically 0: Enabled 1: Disabled			1: The machine will restart from the Energy Saver mode quickly, because the +5V power supply is active even in the Energy Saver mode. The LED of the operation switch is flashing instead of entering Energy Saver mode. Use this setting if an external telephone has to be used when the machine is in the Energy Saver mode.
2-3	Not used			Do not change these settings.
4-5	Interval for preventing the machine from entering Energy Saver mode if there is a pending transmission file.			If there is a file waiting for transmission, the machine does not go to Energy Saver mode during the selected period. After transmitting the file, if there is no file waiting for transmission, the machine goes to the Energy Saver mode.
	Bit 5	Bit 4	Setting	
	0	0	1 min	
	0	1	30 min	
	1	0	1 hour	
	1	1	24 hours	
6-7	Not used			Do not change

WWW.SERVICE-MANUAL.NET

System Switch 16 (SP No. 1-101-023)		
No	**Function**	**Comments**
0	Parallel Broadcasting 0: Disabled 1: Enabled	1: The machine sends messages simultaneously using all available ports during broadcasting. **NOTE:** If a customer wants to keep a line available for fax reception or other reasons, select "0" (Disable).
1	Priority setting for the G3 line. 0: PSTN-1 > PSTN-2 or 3 1: PSTN-2 or 3 > PSTN-1	This function allows the user to select the default G3 line type. The optional SG3 units are required to use the PSTN-2 or 3 setting.
2-7	Not used	Do not change these settings.

System Switch 17 - Not used (do not change these settings)
System Switch 18 - Not used (do not change these settings)

WWW.SERVICE-MANUAL.NET

System Switch 19 (SP No. 1-101-026)		
No	**Function**	**Comments**
0-5	Not used	Do not change the settings.
6	Extended scanner page memory after memory option is installed 0: Disabled 1: Enabled	0: After installing the memory expansion option, the scanner page memory is extended to 4 MB from 2 MB. 1: If this bit is set to 1 after installing the memory expansion option, the scanner page memory is extended to 12 MB. But the SAF memory decreases to 18 MB.
7	Special Original mode 0: Disabled 1: Enabled	1: If the customer frequently wishes to transmit a form or letterhead which has a colored or printed background, change this bit to "1". "Original 1" and "Original 2" can be selected in addition to the "Text", "Text/Photo" and "Photo" modes.

System Switch 1A (SP No. 1-101-027)		
No	**Function**	**Comments**
0 to 7	LS RX memory capacity threshold setting 00-FF (0-1020 Kbyte: Hex)	Sets the value to x4KB. When the amount of available memory drops below this setting, RX documents are printed to conserve memory. Initial setting 0x80 (512 KB) **NOTE:** If a customer wants available memory size larger, decrease this threshold.

WWW.SERVICE-MANUAL.NET

System Switch 1B - Not used (do not change these settings)
System Switch 1C - Not used (do not change these settings)

System Switch 1D (SP No. 1-101-030)		
No	**Function**	**Comments**
0	RTI/CSI/CPS code display 0: Enable 1: Disable	0: RTI, CSI, CPS codes are displayed on the top line of the LCD panel during communication. 1: Codes are switched off (no display)
1-7	Not used	Do not change these settings.

System Switch 1E (SP No. 1-101-031)		
No	**Function**	**Comments**
0	Communication after the Journal data storage area has become full 0: Impossible 1: Possible	0: When this switch is on and the journal history becomes full, the next report prints. If the journal history is not deleted, the next transmission cannot be received. This prevents overwriting communication records before the machine can print them. 1: If the buffer memory of the communication records for the Journal is full, fax communications are still possible. But the machine will overwrite the oldest communication records. Note ▪ This setting is effective only when Automatic Journal printout is enabled but the machine cannot print the report (e.g., no paper).
1	Action when the SAF memory has become full during scanning	0: If the SAF memory becomes full during scanning at the memory transmission, the successfully scanned pages are transmitted.

WWW.SERVICE-MANUAL.NET

	0: The current page is erased. 1: The entire file is erased.	1: If the SAF memory becomes full during scanning at the memory transmission, the file is erased and no pages are transmitted. Note ▪ This setting is effective only when Automatic Journal printout is enabled but the machine cannot print the report (e.g., no paper).
2	RTI/CSI display priority 0: RTI 1: CSI	This bit determines which identifier, RTI or CSI, is displayed on the LCD while the machine is communicating in G3 non-standard mode.
3	File No. printing 0: Enabled 1: Disabled	1: File numbers are not printed on any reports. **NOTE:** The file numbers may not be printed in the sequential order. If a customer does not like this numbering, select "0".
4	Action when authorized reception is enabled but authorized RTIs/CSIs are not yet programmed 0: All fax reception is disabled 1: Faxes can be received if the sender has an RTI or CSI	If authorized reception is enabled but the user has stored no acceptable sender RTIs or CSIs, the machine will not be able to receive any fax messages. If the customer wishes to receive messages from any sender that includes an RTI or CSI, and to block messages from senders that do not include an RTI or CSI, change this bit to "1", then enable Authorized Reception. Otherwise, keep this bit at "0 (default setting)".
5-7	Not used	Do not change the settings

WWW.SERVICE-MANUAL.NET

System Switch 1F (SP No. 1-101-032)		
No	**Function**	**Comments**
0	Not used	Do not change the settings.
1	Report printout after an original jam during SAF storage or if the SAF memory fills up 0: Enabled 1: Disabled	0: When an original jams, or the SAF memory overflows during scanning, a report will be printed. Change this bit to "1" if the customer does not want to have a report in these cases. Memory tx – Memory storage report Parallel memory tx – Transmission result report
2	Not used	Do not change the settings.
3	Received fax print start timing (G3 reception) 0: After receiving each page 1: After receiving all pages	0: The machine prints each page immediately after the machine receives it. 1: The machine prints the complete message after the machine receives all the pages in the memory.
4-6	Not used	Do not change the factory settings.
7	Action when a fax SC has occurred 0: Automatic reset 1: Fax unit stops	0: When the fax unit detects a fax SC code other than SC1201 and SC1207, the fax unit automatically resets itself. 1: When the fax unit detects any fax SC code, the fax unit stops. **Cross Reference** Fax SC codes - See "Troubleshooting"

WWW.SERVICE-MANUAL.NET

4.3.2 I-FAX SWITCHES

I-fax Switch 00 (SP No. 1-102-001)		
No	**Function**	**Comments**
Original Width of TX Attachment File		This setting sets the maximum size of the original that the destination can receive. (Bits 3~7 are reserved for future use or not used.)
0	A4	-
1	B4	
2	A3	
3-6	Reserved	
7	Not used	
	0: Off (not selected), 1: On (selected) If more than one of these three bits is set to "1", the larger size has priority. For example, if both Bit 2 and Bit 1 are set to "1" then the maximum size is "A3" (Bit 2). When mail is sent, there is no negotiation with the receiving machine at the destination, so the sending machine cannot make a selection for the receiving capabilities (original width setting) of the receiving machine. The original width selected with this switch is used as the RX machine's original width setting, and the original is reduced to this size before sending. The default is A4. If the width selected with this switch is higher than the receiving machine can accept, the machine detects this and this causes an error.	

WWW.SERVICE-MANUAL.NET

I-fax Switch 01 (SP No. 1-102-002)		
No	**Function**	**Comments**
Original Line Resolution of TX Attachment File		These settings set the maximum resolution of the original that the destination can receive.
0	200x100 Standard	0: Not selected 1: Selected If more than one of these three bits is set to "1", the higher resolution has priority. For example, if both Bit 0 and Bit 2 are set to "1" Then The Resolution is set for "Bit 2 200 x 400.
1	200x200 Detail	
2	200x400 Fine	
3	300 x 300 Reserve	
4	400 x 400 Super Fine	
5	600 x 600 Reserve	
6	Reserve	
7	mm/inch	
	This setting selects mm/inch conversion for mail transmission. 0: Off (No conversion), 1: On (Conversion) When on (set to "1"), the machine converts millimeters to inches for sending mail. There is no switch for converting inches to millimeters. Unlike G3 fax transmissions which can negotiate between sender and receiver to determine the setting, mail cannot negotiate between terminals; the mm/inch selection is determined by the sender fax. When this switch is Off (0): ▪ Images scanned in inches are sent in inches. ▪ Images scanned in mm are sent in mm. ▪ Images received in inches are transmitted in inches. ▪ Images received in mm are transmitted in mm. When this switch is On (1): ▪ Images scanned in inches are sent in inches. ▪ Images scanned in mm are converted to inches. ▪ Images received in inches are transmitted in inches. ▪ Images received in mm are converted to inches.	

WWW.SERVICE-MANUAL.NET

I-fax Switch 02 (SP No. 1-102-003)		
No	**Function**	**Comments**
0	RX Text Mail Header Processing	
	This setting determines whether the header information is printed with text e-mails when they are received. 0: Prints only text mail. 1: Prints mail header information attached to text mail. When a text mail is received with this switch On (1), the "From" address and "Subject" address are printed as header information. When a mail with only binary data is received (a TIFF-F file, for example), this setting is ignored and no header is printed.	
1	Output from Attached Document at E-mail TX Error	
	This setting determines whether only the first page or all pages of an e-mail attachment are printed at the sending station when a transmission error occurs. This allows the customer to see which documents have not reached their intended destinations if sent to the wrong e-mail addresses, for example. 0: Prints 1st page only. 1: Prints all pages.	
2-3	Text String for Return Receipt	
	This setting determines the text string output for the Return Receipt that confirms the transmission was received normally at the destination.	
	00: "Dispatched" Sends from PC mail a request for a Return Receipt. Receives the Return Receipt with "dispatched" in the 2nd part: Disposition: Automatic-action/MDN-send automatically; dispatched The "dispatched" string is included in the Subject string. 01: "Displayed" Sends from PC mail a request for a Return Receipt. Receives the Return Receipt with "displayed" in the 2nd part: Disposition: Automatic-action/MDN-send automatically; displayed The "displayed" string is included in the Subject string. 10: Reserved 11: Reserved	

WWW.SERVICE-MANUAL.NET

	A mail requesting a Return Receipt sent from an IFAX with this switch set to "00" (for "dispatched") received by Microsoft Outlook 2000 may cause an error. If any setting other than "displayed" (01) causes a problem, change the setting to "01" to enable normal sending of the Return Receipt.
4	Media accept feature
	This setting adds or does not add the media accept feature to the answer mail to confirm a reception. 0: Does not add the media accept feature to the answer mail 1: Adds the media accept feature to the answer mail. Use this bit switch if a problem occurs when the machine receives an answer mail, which contains the media accept feature field.
5-6	Not Used
7	Image Resolution of RX Text Mail
	This setting determines the image resolution of the received mail. 0: 200 x 200 1: 400 x 400 The "1" setting requires installation of the Function Upgrade Card in order to have enough SAF (Store and Forward) memory to receive images at 400 x 400 resolution.

WWW.SERVICE-MANUAL.NET

I-fax Switch 03 (SP No. 1-102-004)		
No	**Function**	**Comments**
0	Original Output at Transfer Station	
	This setting determines whether the original is output at the transfer station when it is received from the sender that initiated the transfer transmission. This feature is the same as for G3 transfer transmissions. 0: Received original not output at the transfer station. 1: Received original output. The original is printed after the transfer station has transferred it to the destinations, so its output confirms that the original has been transferred.	
1	Transfer Result Report	
	This setting determines when a Transfer Result Report is generated and returned to the transfer requestor. 0: Returns the report after each transfer. 1: Returns the report only if an error occurred during transfer.	
2	Destination Error Handling for Reception Transfer Request	
	This setting restricts transfer transmission based on whether the final destinations are correct or not. 0: The transfer station transmits to correct destinations only (addresses with no errors in them). 1: If any address has an error in it, the transfer station transfers no transmissions and returns a transfer transmission failure report to the requestor that initiated the transfer. There is no negotiation between the transfer initiator and the transfer station to determine whether the final destination addresses are correct or not. This setting determines whether or not the transfer station transfers the transmissions if there is a mistake in even one of the final destination addresses.	
3	Polling ID Check for Reception of Transfer Request	
	This setting determines whether the polling IDs of incoming transmissions are checked to ensure that the polling IDs match. 0: Receives and transfers only messages that have matching polling IDs. 1: Receives and transfers all messages, even if the polling IDs do not match.	

WWW.SERVICE-MANUAL.NET

4-7	Not Used

I-fax Switch 04 (SP No. 1-102-005)		
No	**Function**	**Comments**
0	Subject for Delivery TX/Memory Transfer	
	This setting determines whether the RTI/CSI registered on this machine or the RTI/CSI of the originator is used in the subject lines of transferred documents. 0: Puts the RTI/CSI of the originator in the Subject line. If this is used, either the RTI or CSI is used. Only one of these can be received for use in the subject line. 1: Puts the RTI/CSI registered on this machine in the Subject line. When this switch is used to transfer and deliver mail to a PC, the information in the Subject line that indicates where the transmission originated can be used to determine automatically the destination folder for each e-mail.	
1	Subject corresponding to mail post database 0: Standard subject 1: Mail post database subject The standard subject is replaced by the mail post database subject in the following three cases: 1) When the service technician sets the service (software) switch. 2) When memory sending or delivery specified by F code is applied by the SMTP server 3) With relay broadcasting (1st stage without the Schmidt 4 function). Note ▪ This switch does not apply for condition 3) when the RX system is set up for memory sending, delivery by F-code, sending with SMTP RX and when operators are using FOL (to prevent problems when receiving transmissions).	
2-7	Not Used	

WWW.SERVICE-MANUAL.NET

I-fax Switch 05 (SP No. 1-102-006)		
No	**Function**	**Comments**
0	Mail Addresses of SMTP Broadcast Recipients	
	Determines whether the e-mail addresses of the destinations that receive transmissions broadcasted using SMTP protocol are recorded in the Journal. For example: "1st destination + Total number of destinations: 9" in the Journal indicates a broadcast to 9 destinations. 0: Not recorded 1: Recorded	
1-7	Not Used	

I-fax Switch 06 - Not used (do not change the settings)
I-fax Switch 07 - Not used (do not change the settings)

I-fax Switch 08 (SP No. 1-102-009)		
No	**Function**	**Comments**
0-7	Memory Threshold for POP Mail Reception	
	This setting determines the amount of SAF (Store and Forward) memory. (SAF stores fax messages to send later for transmission to more than one location, and also holds incoming messages if they cannot be printed.) When the amount of SAF memory available falls below this setting, mail can no longer be received; received mail is then stored on the mail server. 00-FF (0 to 1024 KB: HEX) The hexadecimal number you enter is multiplied by 4 KB to determine the amount of memory.	

WWW.SERVICE-MANUAL.NET

I-fax Switch 09 (SP No. 1-102-010)		
No	**Function**	**Comments**
0-3	Not used	Do not change the settings
4-7	Restrict TX Retries	This setting determines the number of retries when connection and transmission fails due to errors. 01-F (1-15 Hex)

I-fax Switch 0A - Not used (do not change the settings)
I-fax Switch 0B - Not used (do not change the settings)
I-fax Switch 0C - Not used (do not change the settings)
I-fax Switch 0D - Not used (do not change the settings)
I-fax Switch 0E - Not used (do not change the settings)

I-fax Switch 0F (SP No. 1-102-016)		
No	**Function**	**Comments**
0	Delivery Method for SMTP RX Files	
	This setting determines whether files received with SMTP protocol are delivered or output immediately. 0: Off. Files received via SMTP are output immediately without delivery. 1: On. Files received via SMTP are delivered immediately to their destinations.	
1-7	Not used	

WWW.SERVICE-MANUAL.NET

4.3.3 PRINTER SWITCHES

Printer Switch 00 (SP No. 1-103-001)		
No	**Function**	**Comments**
0	Select page separation marks 0: Off 1: On	0: If a 2 page RX transmission is split, [*] is printed in the bottom right corner of the 1st page and only a [2] is printed in the upper right corner of the 2nd page. 1: If a 2 page RX transmission is split into two pages, for example, [*] [2] is printed in the bottom right corner of the 1st page and only a [2] is printed in the upper right corner of the 2nd page. Note ▪ This helps the user to identify pages that have been split because the size of the paper is smaller than the size of the document received. (When A5 is used to print an A4 size document, for example.)
1	Repetition of data when the received page is longer than the printer paper 0: Off 1: On	1: Default. 10 mm of the trailing edge of the previous page are repeated at the top of the next page. 0: The next page continues from where the previous page stopped without any repeated text.
2	Prints the date and time on received fax messages 0: Disabled 1: Enabled	This switch is only effective when user parameter 02 - bit 2 (printing the received date and time on received fax messages) is enabled. 1: The machine prints the received and printed date and time at the bottom of each received page.
3-7	Not used	Do not change the settings.

WWW.SERVICE-MANUAL.NET

<table>
<tr><th colspan="4">Printer Switch 01 (SP No. 1-103-002)</th></tr>
<tr><th>No</th><th colspan="3">Function</th><th>Comments</th></tr>
<tr><td>0-2</td><td colspan="3">Not used</td><td>Do not change the settings.</td></tr>
<tr><td rowspan="6">3-4</td><td colspan="3">Maximum print width used in the setup protocol</td><td rowspan="6">These bits are only effective when bit 7 of printer switch 01 is "1".</td></tr>
<tr><td>Bit 4</td><td>Bit 3</td><td>Setting</td></tr>
<tr><td>0</td><td>0</td><td>Not used</td></tr>
<tr><td>0</td><td>1</td><td>A3</td></tr>
<tr><td>1</td><td>0</td><td>B4</td></tr>
<tr><td>1</td><td>1</td><td>A4</td></tr>
<tr><td>5-6</td><td colspan="3">Not used</td><td>Do not change the settings.</td></tr>
<tr><td>7</td><td colspan="3">Received message width restriction in the protocol signal to the sender
0: Disabled
1: Enabled</td><td>0: The machine informs the transmitting machine of the print width depending on the paper size available from the paper feed stations.
Refer to the table on the next page for how the machine chooses the paper width used in the setup protocol (NSF/DIS).
1: The machine informs the transmitting machine of the fixed paper width which is specified by bits 3 and 4 above.</td></tr>
</table>

WWW.SERVICE-MANUAL.NET

Relationship between available paper sizes and printer width used in the setup protocol

Available Paper Size	Printer width used in the Protocol (NSF/DIS)
A4 or 8.5" x 11"	297 mm width
B5	256 mm width
A5 or 8.5" x 5.5"	216 mm width
No paper available (Paper end)	216 mm width

Printer Switch 02 (SP No. 1-103-003)		
No	**Function**	**Comments**
0	1st paper feed station usage for fax printing 0: Enabled 1: Disabled	0: The paper feed station can be used to print fax messages and reports. 1: The specified paper feed station will not be used for printing fax messages and reports. Note ▪ Do not disable usage for a paper feed station which has been specified by User Parameter Switch 0F (15), or which is used for the Specified Cassette Selection feature.
1	2nd paper feed station usage for fax printing 0: Enabled 1: Disabled	
2	3rd paper feed station usage for fax printing 0: Enabled 1: Disabled	
3	4th paper feed station usage for fax printing 0: Enabled 1: Disabled	
4	LCT usage for fax printing 0: Enabled 1: Disabled	
5-7	Not used	Do not change the settings.

WWW.SERVICE-MANUAL.NET

Printer Switch 03 (SP No. 1-103-004)		
No	**Function**	**Comments**
0	Length reduction of received data 0: Disabled 1: Enabled	0: Incoming pages are printed without length reduction. (Page separation threshold: Printer Switch 03, bits 4 to 7) 1: Incoming page length is reduced when printing. (Maximum reducible length: Printer Switches 04, bits 0 to 4)
1-3	Not used	Do not change the settings
4 to 7	Page separation setting when sub scan compression is forbidden 00-0F (0-15 mm: Hex) Default: 6 mm	Page separation threshold (with reduction disabled with switch 03-0 above). For example, if this setting is set to "10", and A4 is the selected paper size: If the received document is 10 mm or less longer than A4, then the 10 mm are cut and only 1 page prints. If the received document is 10 mm longer than A4, then the document is split into 2 pages.

WWW.SERVICE-MANUAL.NET

Printer Switch 04 (SP No. 1-103-005)						
No	**Function**			**Comments**		
0 to 4	Maximum reducible length when length reduction is enabled with switch 03-0 above. [Maximum reducible length] = [Paper length] + (N x 5mm) "N" is the decimal value of the binary setting of bits 0 to 4.					
	Bit 4	Bit 3	Bit 2	Bit 1	Bit 0	Setting
	0	0	0	0	0	0 mm
	0	0	0	0	1	5 mm
	0	0	1	0	0	20 mm
	1	1	1	1	1	155 mm
	For A5 sideways and B5 sideways paper [Maximum reducible length] = [Paper length] + 0.75 x (N x 5mm)					
5 6	Length of the duplicated image on the next page, when page separation has taken place.					
	Bit 6		Bit 5		Setting	
	0		0		4 mm	
	0		1		10 mm	
	1		0		15 mm	
	1		1		Not used	
7	Not used.			Do not change the setting.		

Printer Switch 05 - Not used (do not change the settings)

WWW.SERVICE-MANUAL.NET

Printer Switch 06 (SP No. 1-103-007)		
No	**Function**	**Comments**
0	Printing while a paper cassette is pulled out, when the Just Size Printing feature is enabled. 0: Printing will not start 1: Printing will start if another cassette has a suitable size of paper, based on the paper size selection priority tables.	Cross reference Just size printing on/off – User switch 05, bit 5
1-7	Not used.	Do not change the settings.

Printer Switch 07 (SP No. 1-103-008)		
No	**Function**	**Comments**
0	Reduction for Journal printing 0: Off 1: On	1: The Journal is reduced to 91% to ensure that there is enough space in the left margin for punch holes or staples.
2-3	Not used.	Do not change the settings.
4	List of destinations in the Communication Failure Report for broadcasting 0: All destinations 1: Only destinations where communication failure occurred	1: Only destinations where communication failure occurred are printed on the Communication Failure Report.
5-7	Not used.	Do not change the settings.

WWW.SERVICE-MANUAL.NET

Printer Switch 08 - Not used (do not change the settings)
Printer Switch 09 - Not used (do not change the settings)
Printer Switch 0A - Not used (do not change the settings)
Printer Switch 0B - Not used (do not change the settings)
Printer Switch 0C - Not used (do not change the settings)
Printer Switch 0D - Not used (do not change the settings)

WWW.SERVICE-MANUAL.NET

<table>
<tr><th colspan="4">Printer Switch 0E (SP No. 1-103-015)</th></tr>
<tr><th>No</th><th colspan="3">Function</th><th>Comments</th></tr>
<tr><td>0</td><td colspan="3">Paper size selection priority
0: Width
1: Length</td><td>0: A paper size that has the same width as the received data is selected first.
1: A paper size which has enough length to print all the received lines without reduction is selected first.</td></tr>
<tr><td>1</td><td colspan="3">Paper size selected for printing A4 width fax data
0: 8.5" x 11" size
1: A4 size</td><td>This switch determines which paper size is selected for printing A4 width fax data, when the machine has both A4 and 8.5" x 11" size paper.</td></tr>
<tr><td>2</td><td colspan="3">Page separation
0: Enabled
1: Disabled</td><td>1: If all paper sizes in the machine require page separation to print a received fax message, the machine does not print the message (Substitute Reception is used). After a larger size of paper is set in a cassette, the machine automatically prints the fax message.</td></tr>
<tr><td rowspan="6">3-4</td><td colspan="3">Printing the sample image on reports</td><td rowspan="6">"Same size" means the sample image is printed at 100%, even if page separation occurs.
User Parameter Switch 19 (13H) bit 4 must be set to "0" to enable this switch.
Refer to Detailed Section Descriptions for more on this feature.</td></tr>
<tr><td>Bit 4</td><td>Bit 3</td><td>Setting</td></tr>
<tr><td>0</td><td>0</td><td>The upper half only</td></tr>
<tr><td>0</td><td>1</td><td>50% reduction (sub-scan only)</td></tr>
<tr><td>1</td><td>0</td><td>Same size</td></tr>
<tr><td>1</td><td>1</td><td>Not used</td></tr>
<tr><td>5-6</td><td colspan="3">Not used</td><td>Do not change the settings.</td></tr>
<tr><td>7</td><td colspan="3">Equalizing the reduction ratio among separated pages
(Page Separation)
0: Enabled</td><td>0: When page separation has taken place, all the pages are reduced with the same reduction ratio.
1: Only the last page is reduced to fit the</td></tr>
</table>

WWW.SERVICE-MANUAL.NET

	1: Disabled	selected paper size when page separation has taken place. Other pages are printed without reduction.

Printer Switch 0F (SP No. 1-103-016)				
No	**Function**			**Comments**
0-1	Smoothing feature			(0, 0) (0, 1): Disable smoothing if the machine receives halftone images from other manufacturers fax machines frequently.
	Bit 1	Bit 0	Setting	
	0	0	Disabled	
	0	1	Disabled	
	1	0	Enabled	
	1	1	Not used	
2	Duplex printing 0: Disabled 1: Enabled			1: The machine always prints received fax messages in duplex printing mode:
3	Binding direction for Duplex printing 0: Left binding 1: Top binding			0: Sets the binding for the left edge of the stack. 1: Sets the binding for the top of the stack.
4-7	Not used			Do not change the settings.

WWW.SERVICE-MANUAL.NET

4.3.4 COMMUNICATION SWITCHES

Communication Switch 00 (SP No. 1-104-001)				
No	**Function**			**Comments**
0-1	Compression modes available in receive mode			These bits determine the compression capabilities to be declared in phase B (handshaking) of the T.30 protocol.
	Bit 1	Bit 0	Modes	
	0	0	MH only	
	0	1	MH/MR	
	1	0	MH/MR/MMR	
	1	1	MH/MR/MMR/JBIG	
2-3	Compression modes available in transmit mode			These bits determine the compression capabilities to be used in the transmission and to be declared in phase B (handshaking) of the T.30 protocol.
	Bit 3	Bit 2	Modes	
	0	0	MH only	
	0	1	MH/MR	
	1	0	MH/MR/MMR	
	1	1	MH/MR/MMR/JBIG	
4	Not used			Do not change the settings.
5	JBIG compression method: Reception 0: Only basic supported 1: Basic and optional both supported			Change the setting when communication problems occur using JBIG compression.
6	JBIG compression method: Transmission 0: Basic mode priority 1: Optional mode priority			Change the setting when communication problems occur using JBIG compression.
7	Closed network (reception) 0: Disabled 1: Enabled			1: Reception will not go ahead if the polling ID code of the remote terminal does not match the polling

WWW.SERVICE-MANUAL.NET

		ID code of the local terminal. This function is only available in NSF/NSS mode.

Communication Switch 01 (SP No. 1-104-002)		
No	**Function**	**Comments**
0	ECM 0: Off 1: On	If this bit is set to 0, ECM is switched off for all communications. In addition, V.8 protocol and JBIG compression are switched off automatically.
1	Not used	Do not change the setting.
2-3	Wrong connection prevention method Bit 3 / Bit 2 / Setting 0 / 0 / None 0 / 1 / 8 digit CSI 1 / 0 / 4 digit CSI 1 / 1 / CSI/RTI	(0,1): The machine will disconnect the line without sending a fax message, if the last 8 digits of the received CSI do not match the last 8 digits of the dialed telephone number. This does not work when manually dialed. (1,0): The same as above, except that only the last 4 digits are compared. (1,1): The machine will disconnect the line without sending a fax message, if the other end does not identify itself with an RTI or CSI. (0,0): Nothing is checked; transmission will always go ahead. Note ▪ This function does not work when dialing is done from the external telephone.
4-5	Not used	Do not change the setting.

WWW.SERVICE-MANUAL.NET

6-7	Maximum printable page length available			The setting determined by these bits is informed to the transmitting terminal in the pre-message protocol exchange (in the DIS/NSF frames).
	Bit 7	Bit 6	Setting	
	0	0	No limit	
	0	1	B4 (364 mm)	
	1	0	A4 (297 mm)	
	1	1	Not used	

Communication Switch 02 (SP No. 1-104-003)			
No	**Function**	**Comments**	
0	G3 Burst error threshold 0: Low 1: High	If there are more consecutive error lines in the received page than the threshold, the machine will send a negative response. The Low and High threshold values depend on the sub-scan resolution, and are as follows.	
		100 dpi	6(L) → 12(H)
		200 dpi	12(L) → 24(H)
		300 dpi	18(L) → 36(H)
		400 dpi	24(L) → 48(H)
1	Acceptable total error line ratio 0: 5% 1: 10%	If the error line ratio for a page exceeds the acceptable ratio, RTN will be sent to the other end.	
2	Treatment of pages received with errors during G3 reception 0: Deleted from memory without printing 1: Printed	0: Pages received with errors are not printed.	

WWW.SERVICE-MANUAL.NET

3	Hang-up decision when a negative code (RTN or PIN) is received during G3 immediate transmission 0: No hang-up, 1: Hang-up	0: The next page will be sent even if RTN or PIN is received. 1: The machine will send DCN and hang up if it receives RTN or PIN. This bit is ignored for memory transmissions or if ECM is being used.
4-7	Not used	Do not change the settings.

Communication Switch 03 (SP No. 1-104-004)		
No	**Function**	**Comments**
0-7	Maximum number of page retransmissions in a G3 memory transmission	00 - FF (Hex) times. This setting is not used if ECM is switched on. Default setting - 03(H)

Communication Switch 04 - Not used (do not change the settings)
Communication Switch 05 - Not used (do not change the settings)
Communication Switch 06 - Not used (do not change the settings)
Communication Switch 07 - Not used (do not change the settings)
Communication Switch 08 - Not used (do not change the settings)
Communication Switch 09 - Not used (do not change the settings)

Communication Switch 0A (SP No. 1-104-011)		
No	**Function**	**Comments**
0	Point of resumption of memory transmission upon redialing 0: From the error page 1: From page 1	0: The transmission begins from the page where transmission failed the previous time. 1: Transmission begins from the first page, using normal memory transmission.
1-7	Not used	Do not change the settings.

WWW.SERVICE-MANUAL.NET

Communication Switch 0B (SP No. 1-104-012)		
No	**Function**	**Comments**
0	Use of Economy Transmission during a Transfer operation to end receivers 0: Disabled, 1: Enabled	These bits determine whether the machine uses the Economy Transmission feature when it is carrying out a Transfer operation as a Transfer Station.
1	Use of Economy Transmission during a Transfer operation to the Next Transfer Stations 0: Disabled, 1: Enabled	
2	Use of Label Insertion for the End Receivers in a Transfer operation 0: Disabled, 1: Enabled	This bit determines whether the machine uses the Label Insertion feature when it is carrying out a Transfer operation as a Transfer Station.
3	Conditions required for Transfer Result Report transmission 0: Always transmitted 1: Only transmitted if there was an error	0: When acting as a Transfer Station, the machine will always send a Transfer Result Report back to the Requesting Station after completing the Transfer Request, even if there were no problems. 1: The machine will only send back a Transfer Result Report if there were errors during communication, meaning one or more of the End Receivers could not be contacted.
4	Printout of the message when acting as a Transfer Station 0: Disabled, 1: Enabled	When the machine is acting as a Transfer Station, this bit determines whether the machine prints the fax message coming in from the Requesting Terminal.
5	Action when there is no fax number in the programmed Quick/Speed dials which meets the requesting terminal's own fax number 0: Transfer is disabled	After the machine receives a transfer request, the machine compares the last N digits of the requesting terminal's own fax number with all the Quick/Speed dials programmed in the machine. (N is the number programmed in communication switch 0C.)

WWW.SERVICE-MANUAL.NET

	1: Transfer is enabled	0: If there is no matching number programmed in the machine, the machine rejects the transfer request. 1: Even if there is no matching number programmed in the machine, the machine accepts the transfer request. The result report will be printed at the transfer terminal, but will not be sent back to the requesting terminal.
6-7	Not used	Do not change the settings.

Communication Switch 0C (SP No. 1-104-013)		
No	**Function**	**Comments**
0-4	Number of digits compared to find the requester's fax number from the programmed Quick/Speed Dials when acting as a Transfer Station	00 – 1F (0 to 31 digits) After the machine receives a transfer request, the machine compares the own telephone number sent from the Requesting Terminal with all Quick/Speed Dials programmed in the machine, starting from Quick Dial 01 to the end of the Speed Dials. This number determines how many digits from the end of the telephone numbers the machine compares. If it is set to 00, the machine will send the report to the first Quick/Speed Dial that the machine compared. If Quick Dial 01 is programmed, the machine will send the report to Quick 01. If Quick Dial 01 through 04 are not programmed and Quick Dial 05 is programmed, the machine will send the report to Quick 05. Default setting – 05(H) = 5 digits
5-7	Not used	Do not change the settings.

WWW.SERVICE-MANUAL.NET

Communication Switch 0D (SP No. 1-104-014)		
No	**Function**	**Comments**
0-7	The available memory threshold, below which ringing detection (and therefore reception into memory) is disabled	00 to FF (Hex), unit = 4 kbytes (e.g., 06(H) = 24 kbytes) One page is about 24 kbytes. The machine refers to this setting before each fax reception. If the amount of remaining memory is below this threshold, the machine cannot receive any fax messages. If this setting is kept at 0, the machine will detect ringing signals and go into receive mode even if there is no memory available. This will result in communication failure.

Communication Switch 0E (SP No. 1-104-015)		
No	**Function**	**Comments**
0-7	Minimum interval between automatic dialing attempts	06 to FF (Hex), unit = 2 s (e.g., 06(H) = 12 s) This value is the minimum time that the machine waits before it dials the next destination.

Communication Switch 0F – Not used (do not change the settings.)

Communication Switch 10 (SP No. 1-104-017)		
No	**Function**	**Comments**
0-7	Memory transmission: Maximum number of dialing attempts to the same destination	01 – FE (Hex) times

WWW.SERVICE-MANUAL.NET

Communication Switch 11 – Not used (do not change the settings.)

Communication Switch 12 (SP No. 1-104-019)		
No	**Function**	**Comments**
0-7	Memory transmission: Interval between dialing attempts to the same destination	01 – FF (Hex) minutes

Communication Switch 13 – Not used (do not change the settings.)

WWW.SERVICE-MANUAL.NET

<table>
<tr><th colspan="4">Communication Switch 14 (SP No. 1-104-021)</th></tr>
<tr><th>No</th><th colspan="3">Function</th><th>Comments</th></tr>
<tr><td>0</td><td colspan="3">Inch-to-mm conversion during transmission
0: Disabled, 1: Enabled</td><td>0: In immediate transmission, data scanned in inch format are transmitted without conversion.
In memory transmission, data stored in the SAF memory in mm format are transmitted without conversion.
Note: When storing the scanned data into SAF memory, the fax unit always converts the data into mm format.
1: The machine converts the scanned data or stored data in the SAF memory to the format which was specified in the set-up protocol (DIS/NSF) before transmission.</td></tr>
<tr><td>1-5</td><td colspan="3">Not used</td><td>Do not change the factory settings.</td></tr>
<tr><td rowspan="6">6-7</td><td colspan="3">Available unit of resolution in which fax messages are received</td><td rowspan="6">For the best performance, do not change the factory settings.
The setting determined by these bits is informed to the transmitting terminal in the pre-message protocol exchange (in the DIS/NSF frames).</td></tr>
<tr><td>Bit 7</td><td>Bit 6</td><td>Unit</td></tr>
<tr><td>0</td><td>0</td><td>mm</td></tr>
<tr><td>0</td><td>1</td><td>inch</td></tr>
<tr><td>1</td><td>0</td><td>mm and inch</td></tr>
<tr><td>1</td><td>1</td><td>Not used</td></tr>
</table>

WWW.SERVICE-MANUAL.NET

Communication Switch 15 – Not used (do not change the settings)

Communication Switch 16 (SP No. 1-104-023)		
No	**Function**	**Comments**
0	Not used	Do not change the settings.
1	Optional G3 unit (G3-2) 0: Not installed 1: Installed	Change this bit to 1 when installing the first optional G3 unit.
2	Not used	
3	Select PSTN connection 0: Off 1: On	This switch enables the G3-2. 0: Off, no connection 1: Recognizes and enables G3-2. This switch can be used only after G3-2 has been installed.
4-7	Not used	Do not change the settings.

WWW.SERVICE-MANUAL.NET

Communication Switch 17 (SP No. 1-104-024)		
No	**Function**	**Comments**
0	SEP reception 0: Disabled 1: Enabled	0: Polling transmission to another maker's machine using the SEP (Selective Polling) signal is disabled.
1	SUB reception 0: Disabled 1: Enabled	0: Confidential reception to another maker's machine using the SUB (Sub-address) signal is disabled.
2	PWD reception 0: Disabled 1: Enabled	0: Disables features that require PWD (Password) signal reception.
3-6	Not used	Do not change the settings.
7	Action when there is no box with an F-code that matches the received SUB code 0: Disconnect the line 1: Receive the message (using normal reception mode)	Change this setting when the customer requires.

Communication Switch 18 - Not used (do not change the settings)
Communication Switch 19 - Not used (do not change the settings)
Communication Switch 1A - Not used (do not change the settings)

WWW.SERVICE-MANUAL.NET

Communication Switch 1B (SP No. 1-104-028)		
No	**Function**	**Comments**
0-7	Extension access code (0 to 7) to turn V.8 protocol On/Off 0: On 1: Off	If the PABX does not support V.8/V.34 protocol procedure, set this bit to "1" to disable V.8. Example: If "0" is the PSTN access code, set bit 0 to 1. When the machine detects "0" as the first dialed number, it automatically disables V.8 protocol. (Alternatively, if "3" is the PSTN access code, set bit 3 to 1.)

Communication Switch 1C (SP No. 1-104-029)		
No	**Function**	**Comments**
0-1	Extension access code (8 and 9) to turn V.8 protocol On/Off 0: On 1: Off	Refer to communication switch 1B. Example: If "8" is the PSTN access code, set bit 0 to 1. When the machine detects "8" as the first dialed number, it automatically disables V.8 protocol. (If "9" is the PSTN access code, use bit 1.)
2-7	Not used	Do not change the settings.

Communication Switch 1D - Not used (do not change the settings)
Communication Switch 1E - Not used (do not change the settings)
Communication Switch 1F - Not used (do not change the settings)

WWW.SERVICE-MANUAL.NET

4.3.5 G3 SWITCHES

<table>
<tr><th colspan="4">G3 Switch 00 (SP No. 1-105-001)</th></tr>
<tr><th>No</th><th colspan="3">Function</th><th>Comments</th></tr>
<tr><td rowspan="7">0
1</td><td colspan="3">Monitor speaker during communication (tx and rx)</td><td rowspan="7">(0, 0): The monitor speaker is disabled all through the communication.
(0, 1): The monitor speaker is on up to phase B in the T.30 protocol.
(1, 0): Used for testing. The monitor speaker is on all through the communication. Make sure that you reset these bits after testing.</td></tr>
<tr><td>Bit 1</td><td>Bit 0</td><td>Setting</td></tr>
<tr><td>0</td><td>0</td><td>Disabled</td></tr>
<tr><td>0</td><td>1</td><td>Up to Phase B</td></tr>
<tr><td>1</td><td>0</td><td>All the time</td></tr>
<tr><td>1</td><td>1</td><td>Not used</td></tr>
<tr><td></td><td></td><td></td></tr>
<tr><td>2</td><td colspan="3">Monitor speaker during memory transmission
0: Disabled 1: Enabled</td><td>1: The monitor speaker is enabled during memory transmission.</td></tr>
<tr><td>3-7</td><td colspan="3">Not used</td><td>Do not change the settings.</td></tr>
</table>

WWW.SERVICE-MANUAL.NET

G3 Switch 01 (SP No. 1-105-002)		
No	**Function**	**Comments**
0	Not used	Do not change the settings.
1	Select V.8 protocol for manual RX function 0: No 1: Yes	This switch switches the V.8 protocol for manual receiving off and on.
2-3	Not used	Do not change the settings.
4	DIS frame length 0: 10 bytes 1: 4 bytes	1: The bytes in the DIS frame after the 4th byte will not be transmitted (set to 1 if there are communication problems with PC-based faxes which cannot receive the extended DIS frames).
5	Not used	Do not change the setting.
6	Forbid CED/AMsam output 0: Off 1: On (Forbid output)	Do not change this setting (Default: 0: Off), unless communication problem is caused by a CED or ANSam transmission.
7	Not used	Do not change the setting.

WWW.SERVICE-MANUAL.NET

G3 Switch 02 (SP No. 1-105-003)		
No	**Function**	**Comments**
0	G3 protocol mode used 0: Standard and non-standard 1: Standard only	Change this bit to 1 only when the other end can only communicate with machines that send T.30-standard frames only. 1: Disables NSF/NSS signals (these are used in non-standard mode communication)
1-4	Not used	Do not change the settings.
5	Use of modem rate history for transmission using Quick/Speed Dials 0: Disabled 1: Enabled	0: Communications using Quick/Speed Dials always start from the highest modem rate. 1: The machine refers to the modem rate history for communications with the same machine when determining the most suitable rate for the current communication.
6	Not Used	Do not change the settings.
7	Short preamble 0: Disabled 1: Enabled	Refer to Appendix B in the Group 3 Facsimile Manual for details about Short Preamble.

G3 Switch 03 (SP No. 1-105-004)		
No	**Function**	**Comments**
0	DIS detection number (Echo countermeasure) 0: 1 1: 2	0: The machine will hang up if it receives the same DIS frame twice. 1: Before sending DCS, the machine will wait for the second DIS which is caused by echo on the line.
1	Not Used	Do not change the settings.
2	V.8 protocol 0: Disabled 1: Enabled	0: V.8/V.34 communications will not be possible. Note ▪ Do not set to 0 unless the line condition is always bad enough to slow down the data rate to 14.4 kbps or lower.

WWW.SERVICE-MANUAL.NET

3	ECM frame size 0: 256 bytes 1: 64 bytes	Keep this bit at "0" in most cases.
4	CTC transmission conditions 0: After one PPR signal received 1: After four PPR signals received (ITU-T standard)	0: When using ECM in non-standard (NSF/NSS) mode, the machine sends a CTC to drop back the modem rate after receiving a PPR, if the following condition is met in communications at 14.4, 12.0, 9.6, and 7.2 kbps. $\sqrt{NTransmit \leq NRe\,send}$ NTransmit- Number of transmitted frames NResend- Number of frames to be retransmitted 1: When using ECM, the machine sends a CTC to drop back the modem rate after receiving four PPRs. PPR, CTC: These are ECM protocol signals. This bit is not effective in V.34 communications.
5	Modem rate used for the next page after receiving a negative code (RTN or PIN) 0: No change 1: Fallback	1: The machine's tx modem rate will fall back before sending the next page if a negative code is received. This bit is ignored if ECM is being used.
6	Not used	Do not change the settings
7	Select detection of reverse polarity in ringing 0: Off 1: On	This switch is used to prevent reverse polarity in ringing on the phone line (applied to PSTN-G3 ringing). Do not change this setting 0: No detection (Outside Japan) 1: Detection (Inside Japan only)

WWW.SERVICE-MANUAL.NET

G3 Switch 04 (SP No. 1-105-005)		
No	**Function**	**Comments**
0-3	Training error detection threshold	0 - F (Hex); 0 - 15 bits If the number of error bits in the received TCF is below this threshold, the machine informs the sender that training has succeeded.
4-7	Not used	Do not change the settings.

G3 Switch 05 (SP No. 1-105-006)						
No	**Function**					**Comments**
0-3	Initial Tx modem rate (kbps)					These bits set the initial starting modem rate for transmission. Use the dedicated transmission parameters if you need to change this for specific receivers. If a modem rate 14.4 kbps or slower is selected, V.8 protocol should be disabled manually. Cross reference V.8 protocol on/off - G3 switch 03, bit 2
	Bit 3	Bit 2	Bit 1	Bit 0	kbps	
	0	0	0	1	2.4	
	0	0	1	0	4.8	
	0	0	1	1	7.2	
	0	1	0	0	9.6	
	0	1	0	1	12.0	
	0	1	1	0	14.4	
	0	1	1	1	16.8	
	1	0	0	0	19.2	
	1	0	0	1	21.6	
	1	0	1	0	24.0	
	1	0	1	1	26.4	
	1	1	0	0	28.8	
	1	1	0	1	31.2	

WWW.SERVICE-MANUAL.NET

	0	0	1	1	33.6	
	Other settings - Not used					

4-5	Initial modem type for 9.6 k or 7.2 kbps.			These bits set the initial modem type for 9.6 and 7.2 kbps, if the initial modem rate is set at these speeds.
	Bit 5	Bit 4	Setting	
	0	0	V.29	
	0	1	V.17	
	1	0	V.34	
	1	1	Not used	
6-7	Not used			Do not change the settings.

G3 Switch 06 (SP No. 1-105-007)						
No	**Function**					**Comments**
0-3	Initial Rx modem rate(kbps)					These bits set the initial starting modem rate for reception. Use a lower setting if high speeds pose problems during reception. If a modem rate 14.4 kbps or slower is selected, V.8 protocol should be disabled manually. Cross reference V.8 protocol on/off - G3 switch 03, bit2
	Bit 3	Bit 2	Bit 1	Bit 0	kbps	
	0	0	0	1	2.4	
	0	0	1	0	4.8	
	0	0	1	1	7.2	
	0	1	0	0	9.6	
	0	1	0	1	12.0	
	0	1	1	0	14.4	
	0	1	1	1	16.8	
	1	0	0	0	19.2	
	1	0	0	1	21.6	
	1	0	1	0	24.0	
	1	0	1	1	26.4	

WWW.SERVICE-MANUAL.NET

	1	1	0	0	28.8	
	1	1	0	1	31.2	
	Other settings - Not used					

4-7	Modem types available for reception The setting of these bits is used to inform the transmitting terminal of the available modem type for the machine in receive mode. If V.34 is not selected, V.8 protocol must be disabled manually. Cross reference V.8 protocol on/off - G3 switch 03, bit 2				
	Bit 7	Bit 6	Bit 5	Bit 4	Types
	0	0	0	1	V.27ter
	0	0	1	0	V.27ter, V.29
	0	0	1	1	V.27ter, V.29, V.33
	0	1	0	0	V.27ter, V.29, V.17/V.33
	0	1	0	1	V.27ter, V.29, V.17/V33, V.34
	Other settings - Not used				

G3 Switch 07 (SP No. 1-105-008)					
No	**Function**				**Comments**
0-1	PSTN cable equalizer (tx mode: Internal)				Use a higher setting if there is signal loss at higher frequencies because of the length of wire between the modem and the telephone exchange. Use the dedicated transmission parameters for specific receivers. Also, try using the cable equalizer if one or more of the following symptoms occurs. Communication error Modem rate fallback occurs frequently. Note
	Bit 1	Bit 0	Setting		
	0	0	None		
	0	1	Low		
	1	0	Medium		
	1	1	High		

WWW.SERVICE-MANUAL.NET

<table>
<tr><td></td><td></td><td></td><td></td><td></td><td></td><td>▪ This setting is not effective in V.34 communications.</td></tr>
<tr><td rowspan="7">2-3</td><td colspan="6">PSTN cable equalizer
(rx mode: Internal)</td><td rowspan="7">Use a higher setting if there is signal loss at higher frequencies because of the length of wire between the modem and the telephone exchange.
Also, try using the cable equalizer if one or more of the following symptoms occurs.
Communication error with error codes such as 0-20, 0-23, etc.
Modem rate fallback occurs frequently.
Note
▪ This setting is not effective in V.34 communications.</td></tr>
<tr><td colspan="2">Bit 3</td><td colspan="2">Bit 2</td><td colspan="2">Setting</td></tr>
<tr><td colspan="2">0</td><td colspan="2">0</td><td colspan="2">None</td></tr>
<tr><td colspan="2">0</td><td colspan="2">1</td><td colspan="2">Low</td></tr>
<tr><td colspan="2">1</td><td colspan="2">0</td><td colspan="2">Medium</td></tr>
<tr><td colspan="2">1</td><td colspan="2">1</td><td colspan="2">High</td></tr>
<tr><td></td><td></td><td></td><td></td><td></td><td></td></tr>
<tr><td>4</td><td colspan="6">PSTN cable equalizer
(V.8/V.17 rx mode: External)
0: Disabled
1: Enabled</td><td>Keep this bit at "1".</td></tr>
<tr><td>5-7</td><td colspan="6">Not used</td><td>Do not change the settings.</td></tr>
</table>

G3 Switch 08 - Not used (do not change the settings)
G3 Switch 09 - Not used (do not change the settings)

WWW.SERVICE-MANUAL.NET

G3 Switch 0A (SP No. 1-105-011)				
No	**Function**			**Comments**
0-1	Maximum allowable carrier drop during image data reception			These bits set the acceptable modem carrier drop time. Try a longer setting if error code 0-22 is frequent.
	Bit 1	Bit 0	Value (ms)	
	0	0	200	
	0	1	400	
	1	0	800	
	1	1	Not used	
2	Select cancellation of high-speed RX if carrier signal lost while receiving 0: Off 1: On			This switch setting determines if high-speed receiving ends if the carrier signal is lost when receiving during non-ECM mode
3	Not used			Do not change the settings
4	Maximum allowable frame interval during image data reception. 0: 5 s 1: 13 s			This bit set the maximum interval between EOL (end-of-line) signals and the maximum interval between ECM frames from the other end. Try using a longer setting if error code 0-21 is frequent.
5	Not used			Do not change the settings.

WWW.SERVICE-MANUAL.NET

6	Reconstruction time for the first line in receive mode 0: 6 s 1: 12 s	When the sending terminal is controlled by a computer, there may be a delay in receiving page data after the local machine accepts set-up data and sends CFR. This is outside the T.30 recommendation. But, if this delay occurs, set this bit to 1 to give the sending machine more time to send data. Refer to error code 0-20. ITU-T T.30 recommendation: The first line should come within 5 s of CFR.
7	Not used	Do not change the settings.

G3 Switch 0B Not used (do not change the settings).
G3 Switch 0C Not used (do not change the settings).
G3 Switch 0D Not used (do not change the settings).

G3 Switch 0E (SP No. 1-105-015)		
No	**Function**	**Comments**
0-7	Set CNG send time interval Some machines on the receiving side may not be able to automatically switch the 3-second CNG interval.	
	High order bit	3000-2250ms: 3000-50xNms 3000 – 50 x Nms 0F (3000 ms) <= N <= FF (2250 ms)
	Low order bit	00-0E(3000-3700ms: 3000+50xNms 3000 – 50 x Nms 0F (3000 ms) <= N <= 0F (3700 ms)

WWW.SERVICE-MANUAL.NET

G3 Switch 0F (SP No. 1-105-016)		
No	**Function**	**Comments**
0	Alarm when an error occurred in Phase C or later 0: Disabled 1: Enabled	If the customer wants to hear an alarm after each error communication, change this bit to "1".
1	Alarm when the handset is off-hook at the end of communication 0: Disabled 1: Enabled	If the customer wants to hear an alarm if the handset is off-hook at the end of fax communication, change this bit to "1".
2-7	Not used	Do not change the settings.

WWW.SERVICE-MANUAL.NET

4.3.6 G3-2 AND G3-3 SWITCHES

These switches require an optional G3 interface unit.

G3-3 switches are the same as for G3-2 switches.

G3-2 Switch 00 (SP No. 1-106-001)				
No	**Function**			**Comments**
0 1	Monitor speaker during communication (tx and rx)			(0, 0): The monitor speaker is disabled all through the communication. (0, 1): The monitor speaker is on up to phase B in the T.30 protocol. (1, 0): Used for testing. The monitor speaker is on all through the communication. Make sure that you reset these bits after testing.
	Bit 1	Bit 0	Setting	
	0	0	Disable	
	0	1	Up to Phase B	
	1	0	All the time	
	1	1	Not used	
2	Monitor speaker during memory transmission 0: Disabled 1: Enabled			1: The monitor speaker is enabled during memory transmission.
3-7	Not used			Do not change the settings.

WWW.SERVICE-MANUAL.NET

G3-2 Switch 01 (SP No. 1-106-002)		
No	**Function**	**Comments**
0-3	Not used	Do not change the settings.
4	DIS frame length 0: 10 bytes 1: 4 bytes	1: The bytes in the DIS frame after the 4th byte will not be transmitted (set to 1 if there are communication problems with PC-based faxes which cannot receive the extended DIS frames).
5	Not used	Do not change the setting.
6	Forbid CED/AMsam output 0: Off 1: On (Forbid output)	Do not change this setting (Default: 0: Off), unless communication problem is caused by a CED or ANSam transmission.
7	Not used	Do not change the setting.

G3-2 Switch 02 (SP No. 1-106-003)		
No	**Function**	**Comments**
0	G3 protocol mode used 0: Standard and non-standard 1: Standard only	Change this bit to 1 only when the other end can only communicate with machines that send T.30-standard frames only. 1: Disables NSF/NSS signals (these are used in non-standard mode communication)
1-4	Not used	Do not change the settings.
5	Use of modem rate history for transmission using Quick/Speed Dials 0: Disabled 1: Enabled	0: Communications using Quick/Speed Dials always start from the highest modem rate. 1: The machine refers to the modem rate history for communications with the same machine when determining the most suitable rate for the current communication.
6	Not Used	Do not change the settings.
7	Short preamble 0: Disabled 1: Enabled	Refer to Appendix B in the Group 3 Facsimile Manual for details about Short Preamble.

WWW.SERVICE-MANUAL.NET

G3-2 Switch 03 (SP No. 1-106-004)		
No	**Function**	**Comments**
0	DIS detection number (Echo countermeasure) 0: 1 1: 2	0: The machine will hang up if it receives the same DIS frame twice. 1: Before sending DCS, the machine will wait for the second DIS which is caused by echo on the line.
1	Not Used	Do not change the settings.
2	V.8 protocol 0: Disabled 1: Enabled	0: V.8/V.34 communications will not be possible. Note ▪ Do not set to 0 unless the line condition is always bad enough to slow down the data rate to 14.4 kbps or lower.
3	ECM frame size 0: 256 bytes 1: 64 bytes	Keep this bit at "0" in most cases.
4	CTC transmission conditions 0: After one PPR signal received 1: After four PPR signals received (ITU-T standard)	0: When using ECM in non-standard (NSF/NSS) mode, the machine sends a CTC to drop back the modem rate after receiving a PPR, if the following condition is met in communications at 14.4, 12.0, 9.6, and 7.2 kbps. $\sqrt{NTransmit \leq NRe\,send}$ Ntransmit = Number of transmitted frames Nresend = Number of frames to be retransmitted 1: When using ECM, the machine sends a CTC to drop back the modem rate after receiving four PPRs. PPR, CTC: These are ECM protocol signals. This bit is not effective in V.34 communications.

WWW.SERVICE-MANUAL.NET

5	Modem rate used for the next page after receiving a negative code (RTN or PIN) 0: No change 1: Fallback	1: The machine's tx modem rate will fall back before sending the next page if a negative code is received. This bit is ignored if ECM is being used.
6	Not used	Do not change the settings
7	Select detection of reverse polarity in ringing 0: Off 1: On	This switch is used to prevent reverse polarity in ringing on the phone line (applied to PSTN-G3 ringing). Do not change this setting 0: No detection (Outside Japan) 1: Detection (Inside Japan only)

G3-2 Switch 04 (SP No. 1-106-005)		
No	**Function**	**Comments**
0-3	Training error detection threshold	0 - F (Hex); 0 - 15 bits If the number of error bits in the received TCF is below this threshold, the machine informs the sender that training has succeeded.
4-7	Not used	Do not change the settings.

WWW.SERVICE-MANUAL.NET

G3-2 Switch 05 (SP No. 1-106-006)						
No	**Function**					**Comments**
0-3	Initial Tx modem rate (kbps)					These bits set the initial starting modem rate for transmission. Use the dedicated transmission parameters if you need to change this for specific receivers. If a modem rate 14.4 kbps or slower is selected, V.8 protocol should be disabled manually. Cross reference V.8 protocol on/off - G3 switch 03, bit 2
	Bit 3	Bit 2	Bit 1	Bit 0	kbps	
	0	0	0	1	2.4	
	0	0	1	0	4.8	
	0	0	1	1	7.2	
	0	1	0	0	9.6	
	0	1	0	1	12.0	
	0	1	1	0	14.4	
	0	1	1	1	16.8	
	1	0	0	0	19.2	
	1	0	0	1	21.6	
	1	0	1	0	24.0	
	1	0	1	1	26.4	
	1	1	0	0	28.8	
	1	1	0	1	31.2	
	Other settings - Not used					

WWW.SERVICE-MANUAL.NET

4-5	Initial modem type for 9.6 k or 7.2 kbps.			These bits set the initial modem type for 9.6 and 7.2 kbps, if the initial modem rate is set at these speeds.
	Bit 5	Bit 4	Setting	
	0	0	V.29	
	0	1	V.17	
	1	0	V.34	
	1	1	Not used	
6-7	Not used			Do not change the settings.

G3-2 Switch 06 (SP No. 1-106-007)						
No	**Function**					**Comments**
0-3	Initial Rx modem rate(kbps)					These bits set the initial starting modem rate for reception. Use a lower setting if high speeds pose problems during reception. If a modem rate 14.4 kbps or slower is selected, V.8 protocol should be disabled manually. Cross reference V.8 protocol on/off - G3 switch 03, bit2
	Bit 3	Bit 2	Bit 1	Bit 0	kbps	
	0	0	0	1	2.4	
	0	0	1	0	4.8	
	0	0	1	1	7.2	
	0	1	0	0	9.6	
	0	1	0	1	12.0	
	0	1	1	0	14.4	
	0	1	1	1	16.8	
	1	0	0	0	19.2	
	1	0	0	1	21.6	
	1	0	1	0	24.0	
	1	0	1	1	26.4	
	1	1	0	0	28.8	
	1	1	0	1	31.2	

WWW.SERVICE-MANUAL.NET

	Other settings - Not used	

4-7

Modem types available for reception

The setting of these bits is used to inform the transmitting terminal of the available modem type for the machine in receive mode.

If V.34 is not selected, V.8 protocol must be disabled manually.

Cross reference

V.8 protocol on/off - G3 switch 03, bit 2

Bit 7	Bit 6	Bit 5	Bit 4	Types
0	0	0	1	V.27ter
0	0	1	0	V.27ter
0	0	1	1	V.27ter
0	1	0	0	V.27ter
0	1	0	1	V.27ter

Other settings - Not used

WWW.SERVICE-MANUAL.NET

G3-2 Switch 07 (SP No. 1-106-008)				
No	**Function**			**Comments**
0-1	PSTN cable equalizer (tx mode: Internal)			Use a higher setting if there is signal loss at higher frequencies because of the length of wire between the modem and the telephone exchange. Use the dedicated transmission parameters for specific receivers. Also, try using the cable equalizer if one or more of the following symptoms occurs. Communication error Modem rate fallback occurs frequently. Note ▪ This setting is not effective in V.34 communications.
	Bit 1	Bit 0	Setting	
	0	0	None	
	0	1	Low	
	1	0	Medium	
	1	1	High	
2-3	PSTN cable equalizer (rx mode: Internal)			Use a higher setting if there is signal loss at higher frequencies because of the length of wire between the modem and the telephone exchange. Also, try using the cable equalizer if one or more of the following symptoms occurs. Communication error with error codes such as 0-20, 0-23, etc. Modem rate fallback occurs frequently. Note ▪ This setting is not effective in V.34 communications.
	Bit 3	Bit 2	Setting	
	0	0	None	
	0	1	Low	
	1	0	Medium	
	1	1	High	

WWW.SERVICE-MANUAL.NET

4	PSTN cable equalizer (V.8/V.17 rx mode: External) 0: Disabled 1: Enabled	Keep this bit at "1".
5-7	Not used	Do not change the settings.

G3-2 Switch 08 - Not used (do not change the settings)
G3-2 Switch 09 - Not used (do not change the settings)

WWW.SERVICE-MANUAL.NET

G3-2 Switch 0A (SP No. 1-106-011)				
No	**Function**			**Comments**
0-1	Maximum allowable carrier drop during image data reception			These bits set the acceptable modem carrier drop time. Try a longer setting if error code 0-22 is frequent.
	Bit 1	Bit 0	Value (ms)	
	0	0	200	
	0	1	400	
	1	0	800	
	1	1	Not used	
2	Select cancellation of high-speed RX if carrier signal lost while receiving 0: Off 1: On			This switch setting determines if high-speed receiving ends if the carrier signal is lost when receiving during non-ECM mode
3	Not used			Do not change the settings
4	Maximum allowable frame interval during image data reception. 0: 5 s 1: 13 s			This bit set the maximum interval between EOL (end-of-line) signals and the maximum interval between ECM frames from the other end. Try using a longer setting if error code 0-21 is frequent.
5	Not used			Do not change the settings.
6	Reconstruction time for the first line in receive mode 0: 6 s 1: 12 s			When the sending terminal is controlled by a computer, there may be a delay in receiving page data after the local machine accepts set-up data and sends CFR. This is outside the T.30 recommendation. But, if this delay occurs, set this bit to 1 to give the sending machine more time to send data. Refer to error code 0-20.

WWW.SERVICE-MANUAL.NET

		ITU-T T.30 recommendation: The first line should come within 5 s of CFR.
7	Not used	Do not change the settings.

G3-2 Switch 0B- Not used (do not change the settings)
G3-2 Switch 0C- Not used (do not change the settings)
G3-2 Switch 0D - Not used (do not change the settings)
G3-2 Switch 0E - Not used (do not change the settings)
G3-2 Switch 0F - Not used (do not change the settings)

4.3.7 G4 INTERNAL SWITCHES

The G4 internal switches (SW00 to 1F) are displayed but do not change these settings.

4.3.8 G4 PARAMETER SWITCHES

The G4 parameter switches (SW00 to 0F) are displayed but do not change these settings.

WWW.SERVICE-MANUAL.NET

4.3.9 IP FAX SWITCHES

IP Fax Switch 00 (SP No. 1-111-001)		
No.	**Function**	**Comments**
0	Not used	Do not change this setting.
1	IP Fax Transport 0: TCP, 1: UDP	Selects TCP or UDP protocol for IP-Fax
2	IP Fax single port selection 0: OFF, 1: ON (enable)	Selects single data port.
3	IP Fax double ports (single data port) selection 0: OFF, 1: ON (enable)	Selects whether IP-Fax uses a double port.
4	IP Fax Gatekeeper 0: OFF, 1: ON (enable)	Enables/disables the gatekeeper for IP-Fax.
5	IP Fax T30 bit signal reverse 0: LSB first, 1: MSB first	Reverses the T30 bit signal.
6	IP Fax max bit rate setting 0: Not affected, 1: Affected	When "0" is selected, the max bit rate does not affect the value of the DIS/DCS. When "1" is selected, the max bit rate affects the value of the DIS/DCS.
7	IP Fax received telephone number confirmation 0: No confirmation, 1: Confirmation	When "0" is selected, fax data is received without checking the telephone number. When "1" is selected, fax data is received only when confirming that the telephone number from the sender matches the registered telephone number in this machine. If this confirmation fails, the line is disconnected.

WWW.SERVICE-MANUAL.NET

IP Fax Switch 01 (SP No. 1-111-002)					
No.	**Function**			**Comments**	
0-3	IP Fax delay level setting Selects the acceptable delay level. Level 0 is the highest quality Default is "0000" (level 0).				
	Bit 3	Bit 2	Bit 1	Bit 0	
	0	0	0	0	Level 0
	0	0	0	1	Level 1
	0	0	1	0	Level 2
	0	0	1	1	Level 3
4-7	IP Fax preamble wait time setting			Selects the preamble wait time. [00 to 0f] There are 16 values in this 4-bit binary switch combination. Waiting time: set value level x 100 ms Max: 0f (1500 ms) Min: 00 (No wait time) The default is "0000" (00H).	

WWW.SERVICE-MANUAL.NET

IP Fax Switch 02 (SP No. 1-111-003)		
No.	**Function**	**Comments**
0	IP Fax bit signal reverse setting 0: Maker code setting 1: Internal bit switch setting	When "0" is selected, the bit signal reverse method is decided by the maker code. When "1" is selected, the bit signal reverse method is decided by the internal bit switch. When communicating between IP Fax devices, LSB first is selected.)
1	IP Fax transmission speed setting 0: Modem speed 1: No limitation	Selects the transmit speed for IP Fax communication.
2	SIP transport setting 0: TCP 1: UDP	This bit switch sets the transport that has priority for receiving IP Fax data. This function is activated only when the sender has both TCP and UDP.
3-7	Not used	Do not change these settings.

WWW.SERVICE-MANUAL.NET

IP Fax Switch 03 (SP No. 1-111-004)		
No.	**Function**	**Comments**
0	Effective field limitation for G3 standard function information 0: OFF, 1: 4byte (DIS)	Limits the effective field for standard G3 function information.
1	Switching between G3 standard and G3 non standard 0: Enable switching 1: G3 standard only	Enables/disables switching between G3 standard and G3 non-standard.
2	AI modem rate function 0: OFF, 1: ON (enable)	Enables/disables the AI modem rate.
3	ECM frame size selection at transmitting 0: 256byte, 1: 64byte	Selects the ECM frame size for sending.
4	DIS detection times for echo prevention 0: 1 time, 1: 2 times	Sets the number of times for DIS to detect echoes.
5	CTC transmission selection 0: PPRx1 1: PPRx4	When "0" is selected, the transmission condition is decided by error frame numbers. When "1" is selected, the transmission condition is based on the ITU-T method.
6	Shift down setting at receiving negative code 0: OFF, 1: ON	Selects whether to shift down when negative codes are received.
7	Not used	Do not change this setting.

WWW.SERVICE-MANUAL.NET

IP Fax Switch 04 (SP No. 1-111-005)		
No.	**Function**	**Comments**
0-3	TCF error threshold	Sets the TCF error threshold level. [00 to 0f] The default is "1111" (0fH).
4-7	Not used	Do not change these settings.

IP Fax Switch 05 (SP No. 1-111-006)						
No.	**Function**					**Comments**
0-3	Modem bit rate setting for transmission (kbps)					Sets the modem bit rate for transmission. The default is "0110" (14.4K bps).
	Bit 3	Bit 2	Bit 1	Bit 0	kbps	
	0	0	0	1	2.4	
	0	0	1	1	4.8	
	0	0	1	1	7.2	
	0	1	0	0	9.6	
	0	1	0	1	12.0	
	0	1	1	0	14.4	
4-5	Modem setting for transmission					Sets the modem type for transmission. The default is "00" (V29).
	Bit 5	Bit 4	Types			
	0	0	V29			
	0	1	V17			
	1	0	Not used			
	1	1	Not used			
6-7	Not used					Do not change these settings.

IP Fax Switch 06 (SP No. 1-111-007)

WWW.SERVICE-MANUAL.NET

<table>
<tr><th>No.</th><th colspan="5">Function</th><th>Comments</th></tr>
<tr><td>0-3</td><td colspan="6">Modem bit rate setting for reception
Sets the modem bit rate for reception. The default is "0110" (14.4K bps).</td></tr>
<tr><td rowspan="7">4-7</td><td colspan="6">Modem setting for reception
Sets the modem type for reception. The default is "0100" (V27ter, V29, V17).</td></tr>
<tr><td>Bit 7</td><td>Bit 6</td><td>Bit 5</td><td>Bit 4</td><td colspan="2">Types</td></tr>
<tr><td>0</td><td>0</td><td>0</td><td>1</td><td colspan="2">V.27ter</td></tr>
<tr><td>0</td><td>0</td><td>1</td><td>0</td><td colspan="2">V.27ter, V.29</td></tr>
<tr><td>0</td><td>0</td><td>1</td><td>1</td><td colspan="2">V.27ter, V.29, V.33</td></tr>
<tr><td>0</td><td>1</td><td>0</td><td>0</td><td colspan="2">V.27ter, V.29, V.17/V.33</td></tr>
<tr><td colspan="6">Other settings - Not used</td></tr>
</table>

WWW.SERVICE-MANUAL.NET

IP Fax Switch 07 (SP No. 1-111-008)		
No.	**Function**	**Comments**
0	TSI information 0: Not added, 1: Added	Adds or does not add TSI information to NSS(S).
1	DCN transmission setting at T1 timeout 0: Not transmitted 1: Transmitted	Transmits or does not transmit DCN at T1 timeout.
2	Not used	Do not change this setting.
3	Hang up setting at DIS reception disabled 0: No hang up 1: Hang up after transmitting DCN	Sets whether the machine disconnects after DIS reception.
4	Number of times for training 0: 1 time, 1: 2 times	Selects the number of times training is done at the same bit rate.
5	Space CSI transmission setting at no CSI registration 0: Not transmitted 1: Transmitted	When "0" is selected, frame data is enabled. When "1" is selected, the transmitted data is all spaces.
6-7	Not used	Do not change these settings.

IP Fax Switch 08 (SP No. 1-111-009)				
No.	**Function**			**Comments**
0-1	T1 timer adjustment			Adjusts the T1 timer. The default is "00" (35 seconds).
	Bit 1	Bit 0		
	0	0	35 s	
	0	1	40 s	
	1	0	50 s	

WWW.SERVICE-MANUAL.NET

	1	1	60 s	
2-3	T4 timer adjustment			Adjust the T4 timer. The default is "00" (3 seconds).
	Bit 3	Bit 2		
	0	0	3 s	
	0	1	3.5 s	
	1	0	4 s	
	1	1	5 s	
4-5	T0 timer adjustment			Adjusts the fail safe timer. This timer sets the interval between "setup" data transmission and T.38 phase decision. If your destination return is late on the network or G3 fax return is late, adjust the longer interval timer. The default is "00" (75 seconds).
	Bit 5	Bit 4		
	0	0	75 s	
	0	1	120 s	
	1	0	180 s	
	1	1	240 s	
6-7	Not used			Do not change these settings.

WWW.SERVICE-MANUAL.NET

IP Fax Switch 09 (SP No. 1-111-010)		
No.	**Function**	**Comments**
0	Network I/F setting for SIP connection 0: IPv4 1: IPv6.	Selects the connection type (IPV4 or IPV6) to connect to the SIP server.
1	Network I/F setting for Fax communication 0: Same setting as SIP server connection 1: Automatic setting	0: The I/F setting for fax communication follows the setting for SIP server connection. 1: The negotiation between the SIP server and the device decides whether IPv4 or IPv6 is used for the I/F setting for fax communication.
2	Record-route setting 0: Disable 1: Enable	0: Disables the record-route function of the SIP server. 1: Enables the record-route function of the SIP server.
3-7	Not used.	Do not change these settings.

WWW.SERVICE-MANUAL.NET

4.4 NCU PARAMETERS

The following tables give the RAM addresses and the parameter calculation units that the machine uses for ringing signal detection and automatic dialing. The factory settings for each country are also given. Most of these must be changed by RAM read/write (SP2-102), but some can be changed using NCU Parameter programming (SP2-103, 104 and 105); if SP2-103, 104 and 105 can be used, this will be indicated in the Remarks column. The RAM is programmed in hex code unless (BCD) is included in the Unit column.

Note

- The following addresses describe settings for the standard NCU.
- Change the fourth digit from “5” to “6” (e.g. 680500 to 680600) for the settings for the first optional G3 interface unit and from “5” to “7” (e.g. 680700) for the settings for the second optional G3 interface unit.

Address	Function					
680500	Country/Area code for NCU parameters					
	Use the Hex value to program the country/area code directly into this address, or use the decimal value to program it using SP2-103-001					
	Country /Area	**Decimal**	**Hex**	**Country /Area**	**Decimal**	**Hex**
	France	00	00	USA	17	11
	Germany	01	01	Asia	18	12
	UK	02	02	Hong Kong	20	14
	Italy	03	03	South Africa	21	15
	Austria	04	04	Australia	22	16
	Belgium	05	05	New Zealand	26	17
	Denmark	06	06	Singapore	24	18
	Finland	07	07	Malaysia	25	19
	Ireland	08	08	China	26	1A
	Norway	09	09	Taiwan	27	1B

WWW.SERVICE-MANUAL.NET

Address	Function					
	Sweden	10	0A	Korea	28	1C
	Switzerland	11	0B	Turkey	32	20
	Portugal	12	0C	Greece	33	21
	Holland	13	0D	Hungary	34	22
	Spain	14	0E	Czech	35	23
	Israel	15	0F	Poland	36	24

Address	Function	Unit	Remarks
680501	Line current detection time	20 ms	Line current detection is disabled. Line current is not detected if 680501 contains FF.
680502	Line current wait time		
680503	Line current drop detect time		
680504	PSTN dial tone frequency upper limit (high byte)	Hz (BCD)	If both addresses contain FF(H), tone detection is disabled.
680505	PSTN dial tone frequency upper limit (low byte)		
680506	PSTN dial tone frequency lower limit (high byte)	Hz (BCD)	If both addresses contain FF(H), tone detection is disabled.
680507	PSTN dial tone frequency lower limit (low byte)		
680508	PSTN dial tone detection time	20 ms	If 680508 contains FF(H), the machine pauses for the pause time (address 68050D / 68050E). Italy: See Note 2.
680509	PSTN dial tone reset time (LOW)		
68050A	PSTN dial tone reset time (HIGH)		
68050B	PSTN dial tone continuous tone time		
68050C	PSTN dial tone permissible drop time		

WWW.SERVICE-MANUAL.NET

Address	Function	Unit	Remarks
68050D	PSTN wait interval (LOW)		-
68050E	PSTN wait interval (HIGH)		
68050F	PSTN ring-back tone detection time	20 ms	Detection is disabled if this contains FF.
680510	PSTN ring-back tone off detection time	20 ms	-
680511	PSTN detection time for silent period after ring-back tone detected (LOW)	20 ms	-
680512	PSTN detection time for silent period after ring-back tone detected (HIGH)	20 ms	-
680513	PSTN busy tone frequency upper limit (high byte)	Hz (BCD)	If both addresses contain FF(H), tone detection is disabled.
680514	PSTN busy tone frequency upper limit (low byte)		
680515	PSTN busy tone frequency lower limit (high byte)	Hz (BCD)	If both addresses contain FF(H), tone detection is disabled.
680516	PSTN busy tone frequency lower limit (low byte)		
680517	PABX dial tone frequency upper limit (high byte)	Hz (BCD)	If both addresses contain FF(H), tone detection is disabled.
680518	PABX dial tone frequency upper limit (low byte)		
680519	PABX dial tone frequency lower limit (high byte)	Hz (BCD)	If both addresses contain FF(H), tone detection is disabled.
68051A	PABX dial tone frequency lower limit (low byte)		
68051B	PABX dial tone detection time	20 ms	If 68051B contains FF,

WWW.SERVICE-MANUAL.NET

Address	Function	Unit	Remarks
68051C	PABX dial tone reset time (LOW)		the machine pauses for the pause time (680520 / 680521).
68051D	PABX dial tone reset time (HIGH)		
68051E	PABX dial tone continuous tone time		
68051F	PABX dial tone permissible drop time		
680520	PABX wait interval (LOW)		-
680521	PABX wait interval (HIGH)		
680522	PABX ringback tone detection time	20 ms	If both addresses contain FF(H), tone detection is disabled.
680523	PABX ringback tone off detection time	20 ms	
680524	PABX detection time for silent period after ringback tone detected (LOW)	20 ms	If both addresses contain FF(H), tone detection is disabled.
680525	PABX detection time for silent period after ringback tone detected (HIGH)	20 ms	
680526	PABX busy tone frequency upper limit (high byte)	Hz (BCD)	If both addresses contain FF(H), tone detection is disabled.
680527	PABX busy tone frequency upper limit (low byte)		
680528	PABX busy tone frequency lower limit (high byte)	Hz (BCD)	If both addresses contain FF(H), tone detection is disabled.
680529	PABX busy tone frequency lower limit (low byte)		
68052A	Busy tone ON time: range 1	20 ms	-
68052B	Busy tone OFF time: range 1		
68052C	Busy tone ON time: range 2		

WWW.SERVICE-MANUAL.NET

Address	Function	Unit	Remarks
68052D	Busy tone OFF time: range 2		
68052E	Busy tone ON time: range 3		
68052F	Busy tone OFF time: range 3	20 ms	
680530	Busy tone ON time: range 4		
680531	Busy tone OFF time: range 4		
680532	Busy tone continuous tone detection time		
680533	Busy tone signal state time tolerance for all ranges, and number of cycles required for detection (a setting of 4 cycles means that ON-OFF-ON or OFF-ON-OFF must be detected twice). Tolerance (±) Bit 1: 0, Bit 0: 0 = 75% Bits 2 and 3 must always be kept at 0. Bit 1: 0, Bit 0: 0 = 50% Bits 2 and 3 must always be kept at 0. Bit 1: 0, Bit 0: 0 = 25% Bit 1: 0, Bit 0: 0 = 12.5% Bits 7, 6, 5, 4 - number of cycles required for cadence detection		
680534	International dial tone frequency upper limit (high byte)	Hz (BCD)	If both addresses contain FF(H), tone detection is disabled.
680535	International dial tone frequency upper limit (low byte)		
680536	International dial tone frequency lower limit (high byte)	Hz (BCD)	If both addresses contain FF(H), tone detection is disabled.
680537	International dial tone frequency lower limit (low byte)		
680538	International dial tone detection time	20 ms	If 680538 contains FF, the machine pauses for the pause time (68053D / 68053E). Belgium: See Note 2.
680539	International dial tone reset time (LOW)		
68053A	International dial tone reset time		

WWW.SERVICE-MANUAL.NET

Address	Function	Unit	Remarks
	(HIGH)		
68053B	International dial tone continuous tone time		
68053C	International dial tone permissible drop time		
68053D	International dial wait interval (LOW)		-
68053E	International dial wait interval (HIGH)		
68053F	Country dial tone upper frequency limit (HIGH)	Hz (BCD)	If both addresses contain FF(H), tone detection is disabled.
680540	Country dial tone upper frequency limit (LOW)		
680541	Country dial tone lower frequency limit (HIGH)		If both addresses contain FF(H), tone detection is disabled.
680542	Country dial tone lower frequency limit (LOW)		
680543	Country dial tone detection time	20 ms	If 680543 contains FF, the machine pauses for the pause time (680548 / 680549).
680544	Country dial tone reset time (LOW)		
680545	Country dial tone reset time (HIGH)		
680546	Country dial tone continuous tone time	-	-
680547	Country dial tone permissible drop time	20 ms	-
680548	Country dial wait interval (LOW)		
680549	Country dial wait interval (HIGH)		

WWW.SERVICE-MANUAL.NET

Address	Function	Unit	Remarks
68054A	Time between opening or closing the DO relay and opening the OHDI relay	1 ms	See Notes 3, 6 and 8. SP2-103-012 (parameter 11).
68054B	Break time for pulse dialing	1 ms	See Note 3. SP2-103-013 (parameter 12).
68054C	Make time for pulse dialing	1 ms	See Note 3. SP2-103-014 (parameter 13).
68054D	Time between final OHDI relay closure and DO relay opening or closing	1 ms	See Notes 3, 6 and 8. SP2-103-015 (parameter 14). This parameter is only valid in Europe.
68054E	Minimum pause between dialed digits (pulse dial mode)	20 ms	See Note 3 and 8. SP2-103-016 (parameter 15).
68054F	Time waited when a pause is entered at the operation panel		SP2-103-017 (parameter 16). See Note 3.
680550	DTMF tone on time	1 ms	SP2-103-018 (parameter 17).
680551	DTMF tone off time		SP2-103-019 (parameter 18).
680552	Tone attenuation level of DTMF signals while dialing	-N x 0.5 –3.5 dBm	SP2-103-020 (parameter 19). See Note 5.

WWW.SERVICE-MANUAL.NET

Address	Function	Unit	Remarks
680553	Tone attenuation value difference between high frequency tone and low frequency tone in DTMF signals	-dBm x 0.5	SP2-103-021 (parameter 20). The setting must be less than –5dBm, and should not exceed the setting at 680552h above. See Note 5.
680554	PSTN: DTMF tone attenuation level after dialling	-N x 0.5 –3.5 dBm	SP2-103-022 (parameter 21). See Note 5.
680555	ISDN: DTMF tone attenuation level after dialling	-dBm x 0.5	See Note 5
680556	Not used	-	Do not change the settings.
680557	Time between 68054Dh (NCU parameter 14) and 68054Eh (NCU parameter 15)	1 ms	This parameter takes effect when the country code is set to France.
680558	Not used	-	Do not change the setting.
680559	Grounding time (ground start mode)	20 ms	The Gs relay is closed for this interval.
68055A	Break time (flash start mode)	1 ms	The OHDI relay is open for this interval.
68055B	International dial access code (High)	BCD	For a code of 100: 68055B - F1 68055C - 00
68055C	International dial access code (Low)		

WWW.SERVICE-MANUAL.NET

Address	Function	Unit	Remarks
68055D	PSTN access pause time	20 ms	This time is waited for each pause input after the PSTN access code. If this address contains FF[H], the pause time stored in address 68054F is used. Do not set a number more than 7 in the UK.
68055E	Progress tone detection level, and cadence detection enable flags	Bit 7: 0, Bit 6: 0, Bit 5: 0 = -25.0 dBm Bit 7: 0, Bit 6: 0, Bit 5: 1 = -35.0 dBm Bit 7: 0, Bit 6: 1, Bit 5: 0 = -30.0 dBm Bit 7: 1, Bit 6: 0, Bit 5: 0 = -40.0 dBm Bit 7: 1, Bit 6: 1, Bit 5: 0 = -49.0 dBm Bits 2, 0 - See Note 2.	
68055F To 680564	**Not used**	-	Do not change the settings.
680565	Long distance call prefix (HIGH)	BCD	For a code of 0: 680565 – FF 680566 - FF
680566	Long distance call prefix (LOW)	BCD	
680567 to 680571	**Not used**	-	Do not change the settings.
680572	Acceptable ringing signal frequency: range 1, upper limit	1000/ N (Hz).	SP2-103-003 (parameter 02).
680573	Acceptable ringing signal frequency: range 1, lower limit		SP2-103-004 (parameter 03).

WWW.SERVICE-MANUAL.NET

Address	Function	Unit	Remarks
680574	Acceptable ringing signal frequency: range 2, upper limit		SP2-103-005 (parameter 04).
680575	Acceptable ringing signal frequency: range 2, lower limit		SP2-103-006 (parameter 05).
680576	Number of rings until a call is detected	1	SP2-103-007 (parameter 06). The setting must not be zero.
680577	Minimum required length of the first ring	20 ms	See Note 4. SP2-103-008 (parameter 07).
680578	Minimum required length of the second and subsequent rings	20 ms	SP2-103-009 (parameter 08).
680579	Ringing signal detection reset time (LOW)	20 ms	SP2-103-010 (parameter 09).
68057A	Ringing signal detection reset time (HIGH)		SP2-103-011 (parameter 10).
68057B to 680580	**Not used**	-	Do not change the settings.
680581	Interval between dialing the last digit and switching the Oh relay over to the external telephone when dialing from the operation panel in handset mode.	20 ms	Factory setting: 500 ms

WWW.SERVICE-MANUAL.NET

Address	Function	Unit	Remarks
680582	Bits 0 and 1 - Handset off-hook detection time Bit 1:0, Bit 0: 0 = 200 ms Bit 1:0, Bit 0: 1 = 800 ms Other Not used Bits 2 and 3 - Handset on-hook detection time Bit 3: 0, Bit 2: 0 = 200 ms Bit 3: 0, Bit 2: 1 = 800 ms Other Not used Bits 4 to 7 - **Not used**		-
680583 To 6805A0	**Not used**	-	Do not change the settings.
6805A1	Acceptable CED detection frequency upper limit (high byte)	BCD (Hz)	If both addresses contain FF(H), tone detection is disabled.
6805A2	Acceptable CED detection frequency upper limit (low byte)		
6805A3	Acceptable CED detection frequency lower limit (high byte)	BCD (Hz)	If both addresses contain FF(H), tone detection is disabled.
6805A4	Acceptable CED detection frequency lower limit (low byte)		
6805A5	CED detection time	20 ms ± 20 ms	Factory setting: 200 ms
6805A6	Acceptable CNG detection frequency upper limit (high byte)	BCD (Hz)	If both addresses contain FF(H), tone detection is disabled.
6805A7	Acceptable CNG detection frequency upper limit (low byte)		
6805A8	Acceptable CNG detection frequency lower limit (high byte)	BCD (Hz)	If both addresses contain FF(H), tone detection is disabled.
6805A9	Acceptable CNG detection frequency lower limit (low byte)		

WWW.SERVICE-MANUAL.NET

Address	Function	Unit	Remarks
6805AA	**Not used**	-	Do not change the setting.
6805AB	CNG on time	20 ms	Factory setting: 500 ms
6805AC	CNG off time	20 ms	Factory setting: 3000 ms
6805AD	Number of CNG cycles required for detection	-	The data is coded in the same way as address 680533.
6805AE	**Not used**	-	Do not change the settings.
6805AF	Acceptable AI short protocol tone (800Hz) detection frequency upper limit (high byte)	Hz (BCD)	If both addresses contain FF(H), tone detection is disabled.
6805B0	Acceptable AI short protocol tone (800Hz) detection frequency upper limit (low byte)		
6805B1	Acceptable AI short protocol tone (800Hz) detection frequency lower limit (high byte)	Hz(BCD)	If both addresses contain FF(H), tone detection is disabled.
6805B2	Acceptable AI short protocol tone (800Hz) detection frequency lower limit (low byte)		
6805B3	Detection time for 800 Hz AI short protocol tone	20 ms	Factory setting: 360 ms
6805B4	PSTN: Tx level from the modem	-N – 3 dBm	SP2-103-002 (parameter 01).
6805B5	PSTN: 1100 Hz tone transmission level	- N 6805B4 - 0.5N 6805B5 –3.5 (dB) See Note 7.	
6805B6	PSTN: 2100 Hz tone transmission level	- N6805B4 - 0.5N 6805B6 –3 (dB) See Note 7.	

WWW.SERVICE-MANUAL.NET

Address	Function	Unit	Remarks
6805B7	PABX: Tx level from the modem	- dBm	
6805B8	PABX: 1100 Hz tone transmission level	- N 6805B7 - 0.5N 6805B8 (dB)	
6805B9	PABX: 2100 Hz tone transmission level	- N 6805B7 - 0.5N 6805B9 (dB)	
6805BD	Modem turn-on level (incoming signal detection level)	-37-0.5N (dBm)	
6805BE to 6805C6	**Not used**	-	Do not change the settings.
6805C7	Bits 0 to 3 – **Not used** Bit 4 = V.34 protocol dump 0: Simple, 1: Detailed (default) Bits 5 to 7 – **Not used.**		
6805C8 to 6805D9	**Not used**	-	Do not change the settings.
6805DA	T.30 T1 timer	1 s	
6805E0 bit 3	Maximum wait time for post message	0: 12 s 1: 30 s	1: Maximum wait time for post message (EOP/EOM/MPS) can be changed to 30 s. Change this bit to “1” if communication errors occur frequently during V.17 reception.

WWW.SERVICE-MANUAL.NET

Address	Function					Unit	Remarks
6805E3	Voltage setting to detect off-hook for voltage/DP detection for an externally connected line.					0: Auto 1: Fixed V	Do not change these settings
	Here is a summary of the fixed voltage settings (1: Fixed) for an externally connected line.						
	Bit 7	Bit 6	Bit 5	Bit 4	-		
	0	0	0	0	**Not used**		
	0	0	0	1	2.75 V		
	0	0	1	0	5.5 V		
	1	0	0	0	22 V		
	1	1	1	1	41.25 V		
6805E4	Bit 1 sets the level of the call signal, Bit 3 sets the call signal impedance			Bit 1	0	RT=0 (Low)	-
					1	RT=1 (High)	
				Bit 3	0	RZ=0 (High)	
					1	RZ=1 (Composite)	

WWW.SERVICE-MANUAL.NET

<table>
<tr><th>Address</th><th colspan="5">Function</th><th>Unit</th><th>Remarks</th></tr>
<tr><td rowspan="12">6805E5</td><td colspan="3" rowspan="4">Bit 0 sets the ring detection method, Bit 1 sets the ring detection method when fixed.</td><td rowspan="2">Bit 0</td><td>0</td><td>Auto</td><td rowspan="12">If any setting is changed, select a setting that is higher than the default setting.</td></tr>
<tr><td>1</td><td>Fixed</td></tr>
<tr><td rowspan="2">Bit 1</td><td>0</td><td>Use RDTP</td></tr>
<tr><td>1</td><td>Use RDTN</td></tr>
<tr><td colspan="6">Here is a summary of the voltages for the detection of off-hook for DP detection.</td></tr>
<tr><td>Bit 7</td><td>Bit 6</td><td>Bit 5</td><td>Bit 4</td><td colspan="2">-</td></tr>
<tr><td>0</td><td>0</td><td>0</td><td>0</td><td colspan="2">Not used</td></tr>
<tr><td>0</td><td>0</td><td>0</td><td>1</td><td colspan="2">2.75 V</td></tr>
<tr><td>0</td><td>0</td><td>1</td><td>0</td><td colspan="2">5.5 V</td></tr>
<tr><td>1</td><td>0</td><td>0</td><td>0</td><td colspan="2">22 V</td></tr>
<tr><td>1</td><td>1</td><td>1</td><td>1</td><td colspan="2">41.25 V</td></tr>
</table>

NOTES

1. If a setting is not required, store FF in the address.
2. Italy and Belgium only

   RAM address 68055E: the lower four bits have the following meaning.

   Bit 2 - 1: International dial tone cadence detection enabled (Belgium)

   Bit 1 - Not used

   Bit 0 - 1: PSTN dial tone cadence detection enabled (Italy)

   If bit 0 or bit 2 is set to 1, the functions of the following RAM addresses are changed.

   680508 (if bit 0 = 1) or 680538 (if bit 2 = 1): tolerance for on or off state duration (%), and number of cycles required for detection, coded as in address 680533.

   68050B (if bit 0 = 1) or 68053B (if bit 2 = 1): on time, hex code (unit = 20 ms)

   68050C (if bit 0 = 1) or 68053C (if bit 2 = 1): off time, hex code (unit = 20 ms)
3. Pulse dial parameters (addresses 68054A to 68054F) are the values for 10 pps. If 20 pps is used, the machine automatically compensates.
4. The first ring may not be detected until 1 to 2.5 wavelengths after the time specified by this parameter.

WWW.SERVICE-MANUAL.NET

5. The calculated level must be between 0 and 10.

   The attenuation levels calculated from RAM data are:

   High frequency tone:

   - – 0.5 x $N_{680552/680554}$–3.5 dBm
   - – 0.5 x N_{680555} dBm

   Low frequency tone:

   - – 0.5 x ($N_{680552/680554}$ + N_{680553}) –3.5 dBm
   - – 0.5 x (N_{680555} + N_{680553}) dBm

   Note

   - N_{680552}, for example, means the value stored in address 680552(H)
6. 68054A: Europe - Between Ds opening and Di opening, France - Between Ds closing and Di opening

   68054D: Europe - Between Ds closing and Di closing, France - Between Ds opening and Di closing
7. Tone signals which frequency is lower than 1500Hz (e.g., 800Hz tone for AI short protocol) refer to the setting at 6805B5h. Tones which frequency is higher than 1500Hz refer to the setting at 6805B6h.
8. 68054A, 68054D, 68054E: The actual inter-digit pause (pulse dial mode) is the sum of the period specified by the RAM addresses 68054A, 68054D, and 68054E.

WWW.SERVICE-MANUAL.NET

4.5 DEDICATED TRANSMISSION PARAMETERS

There are two sets of transmission parameters: Fax and E-mail

Each Quick Dial Key and Speed Dial Code has eight bytes of programmable parameters allocated to it. If transmissions to a particular machine often experience problems, store that terminal's fax number as a Quick Dial or Speed Dial, and adjust the parameters allocated to that number.

The programming procedure will be explained first. Then, the eight bytes will be described.

4.5.1 PROGRAMMING PROCEDURE

1. Set the bit 0 of System Bit Switch 00 to 1.
2. Enter Address Book Management mode ([User Tools]> System Settings> Key Operator> Address Book Management).
3. Select the address book that you want to program.
4. For the fax parameter, select "Fax Dest.", for the E-mail parameter, select "E-mail", then press "Start". Make sure that the LED of the Start button lights green.
5. The settings for the switch 00 are now displayed. Press the bit number that you wish to change.
6. To scroll through the parameter switches, either:
7. Select the next switch: press "Next" or Select the previous switch: "Prev." until the correct switch is displayed. Then go back to step 6.
8. After the setting is changed, press "OK".
9. After finishing, reset bit 0 of System Bit Switch 00 to 0.

WWW.SERVICE-MANUAL.NET

4.5.2 PARAMETERS

Fax Parameters

The initial settings of the following fax parameters are all FF(H) - all the parameters are disabled.

Switch 00
FUNCTION AND COMMENTS
ITU-T T1 time (for PSTN G3 mode) If the connection time to a particular terminal is longer than the NCU parameter setting, adjust this byte. The T1 time is the value stored in this byte (in hex code), multiplied by 1 second. **Range:** 0 to 120 s (00h to 78h) FFh - The local NCU parameter factory setting is used. Do not program a value between 79h and FEh.

WWW.SERVICE-MANUAL.NET

Switch 01

No	FUNCTION						COMMENTS
0-4	Tx level						If communication with a particular remote terminal often contains errors, the signal level may be inappropriate. Adjust the Tx level for communications with that terminal until the results are better. If the setting is "Disabled", the NCU parameter 01 setting is used. Note ▪ Do not use settings other than listed on the left.
	Bit4	Bit3	Bit2	Bit1	Bit0		
	0	0	0	0	0	0	
	0	0	0	0	1	–1	
	0	0	0	1	0	–2	
	0	0	0	1	1	–3	
	0	0	1	0	0	–4	
	↓	↓	↓	↓	↓	↓	
	0	1	1	1	1	–15	
	1	1	1	1	1	Disabled	
5-7	Cable equalizer Bit 7: 0, Bit 6: 0, Bit 5: 0 = None Bit 7: 0, Bit 6: 0, Bit 5: 1 = Low Bit 7: 0, Bit 6: 1, Bit 5: 0 = Medium Bit 7: 0, Bit 6: 1, Bit 5: 1 = High Bit 7: 1, Bit 6: 1, Bit 5: 1 = Disabled						Use a higher setting if there is signal loss at higher frequencies because of the length of wire between the modem and the telephone exchange when calling the number stored in this Quick/Speed Dial. Also, try using the cable equalizer if one or more of the following symptoms occurs. Communication error with error codes such as 0-20, 0-23, etc. Modem rate fallback occurs frequently. Note ▪ Do not use settings other than listed on the left. If the setting is "Disabled", the bit switch setting is used.

WWW.SERVICE-MANUAL.NET

Switch 02

No	FUNCTION					COMMENTS
0-3	Initial Tx modem rate					If training with a particular remote terminal always takes too long, the initial modem rate may be too high. Reduce the initial Tx modem rate using these bits. For the settings 14.4 or kbps slower, Switch 04 bit 4 must be changed to 0. Note ▪ Do not use settings other than listed on the left. If the setting is "Disabled", the bit switch setting is used.
	Bit3	Bit2	Bit1	Bit0	bps	
	0	0	0	0	Not used	
	0	0	0	1	2400	
	0	0	1	0	4800	
	0	0	1	1	7200	
	0	1	0	0	9600	
	0	1	0	1	12000	
	0	1	1	0	14400	
	0	1	1	1	16800	
	1	0	0	0	19200	
	1	0	0	1	21600	
	1	0	1	0	24000	
	1	0	1	1	26400	
	1	1	0	0	28800	
	1	1	0	1	31200	
	1	1	1	0	33600	
	1	1	1	1	Disabled	
	Other settings: **Not used**					
4-7	**Not used**					Do not change the settings.

WWW.SERVICE-MANUAL.NET

Switch 03		
No	**FUNCTION**	**COMMENTS**
0-1	Inch-mm conversion before tx Bit 1: 0, Bit 0: 0 = Inch-mm conversion available Bit 1: 0, Bit 0: 1 = Inch only Bit 1: 1, Bit 0: 0 = Not used Bit 1: 1, Bit 0: 1 = Disabled	The machine uses inch-based resolutions for scanning. If "inch only" is selected, the printed copy may be slightly distorted at the other end if that machine uses mm-based resolutions. If the setting is "Disabled", the bit switch setting is used.
2-3	DIS/NSF detection method Bit 3: 0, Bit 2: 0 = First DIS or NSF Bit 3: 0, Bit 2: 1 = Second DIS or NSF Bit 3: 1, Bit 2: 0 = Not used Bit 3: 1, Bit 2: 1 = Disabled	(0, 1): Use this setting if echoes on the line are interfering with the set-up protocol at the start of transmission. The machine will then wait for the second DIS or NSF before sending DCS or NSS. If the setting is "Disabled", the bit switch setting is used.
4	V.8 protocol 0: Off 1: Disabled	If transmissions to a specific destination always end at a lower modem rate (14,400 bps or lower), disable V.8 protocol so as not to use V.34 protocol. 0: V.34 communication will not be possible. If the setting is "Disabled", the bit switch setting is used.
5	Compression modes available in transmit mode 0: MH only 1: Disabled	This bit determines the capabilities that are informed to the other terminal during transmission. If the setting is "Disabled", the bit switch setting is used.
6-7	ECM during transmission Bit 7: 0, Bit 6: 0 = Off Bit 7: 0, Bit 6: 1 = On Bit 7: 1, Bit 6: 0 = Not used Bit 7: 1, Bit 6: 1 = Disabled	For example, if ECM is switched on but is not wanted when sending to a particular terminal, use the (0, 0) setting. Note ▪ V.8/V.34 protocol and JBIG compression are automatically disabled if ECM is disabled. ▪ If the setting is "Disabled", the bit switch

WWW.SERVICE-MANUAL.NET

		setting is used.

Switch 04 - Not used (do not change the settings)
Switch 05 - Not used (do not change the settings)
Switch 06 - Not used (do not change the settings)
Switch 07 - Not used (do not change the settings)
Switch 08 - Not used (do not change the settings)
Switch 09 - Not used (do not change the settings)

WWW.SERVICE-MANUAL.NET

E-mail Parameters

The initial settings of the following e-mail parameters are all "0" (all parameters disabled).

Switch 00		
No	**FUNCTION**	**COMMENTS**
0	MH Compression mode for e-mail attachments **0**: Off 1: On	Switches MH compression on and off for files attached to e-mails for sending.
1	MR Compression mode for e-mail attachments **0**: Off 1: On	Switches MR compression on and off for files attached to e-mails for sending.
2	MMR Compression mode for e-mail attachments **0**: Off 1: On	Switches MMR compression on and off for files attached to e-mails for sending.
3-6	**Not used**	Do not change these settings.
7	Designates the bits to reference for compression method of e-mail attachments **0**: Registered (Bit 0 to 6) 1: No registration.	The "0" selection (default) references the settings for Bits 00, 01, 02 above. The "1" selection ignores the selections of Bits 00, 01, 02.

WWW.SERVICE-MANUAL.NET

Switch 01		
No	**FUNCTION**	**COMMENTS**
0	Original width of e-mail attachment: A4 **0**: Off 1: On	Sets the original width of the e-mail attachment as A4.
1	Original width of e-mail attachment: B4 **0**: Off 1: On	Sets the original width of the e-mail attachment as B4.
2	Original width of e-mail attachment: A3 **0**: Off 1: On	Sets the original width of the e-mail attachment as A3.
3-6	**Not used**	Do not change these settings.
7	Designates the bits to reference for original size of e-mail attachments **0**: Registered (Bit 0 to 6) 1: No registration.	The "0" selection (default) references the settings for Bits 00, 01, 02 above. The "1" selection ignores the selections of Bits 00, 01, 02.

WWW.SERVICE-MANUAL.NET

Switch 02		
No	**FUNCTION**	**COMMENTS**
0	Line resolution of e-mail attachment: 200 x 100 **0**: Off 1: On	Sets the line resolution of the e-mail attachment as 200 x100.
1	Line resolution of e-mail attachment: 200 x 200 **0**: Off 1: On	Sets the line resolution of the e-mail attachment as 200 x 200.
2	Line resolution of e-mail attachment: 200 x 400 **0**: Off 1: On	Sets the line resolution of the e-mail attachment as 200 x 400.
3	Not used	Do not change these settings.
4	Line resolution of e-mail attachment: 400 x 400 **0**: Off 1: On	Sets the line resolution of the e-mail attachment as 400 x 400.
5-6	**Not used**	Do not change these settings.
7	Designates the bits to reference for original size of e-mail attachments **0**: Registered (Bit 0 to 6) 1: No registration.	The "0" selection (default) references the settings for Bits 00, 01, 02, 04 above. The "1" selection ignores the selections of Bits 00, 01, 02, 04.

WWW.SERVICE-MANUAL.NET

Switch 03 - Not used (do not change the settings)

Switch 04		
No	**FUNCTION**	**COMMENTS**
0	Full mode address selection 0: Full mode address 1: No full mode (simple mode)	If the other ends have the addresses, which have the full mode function flag ("0"), this machine determines them as full mode standard machines. ▪ This machine attaches the "demand of reception confirmation" to a message when transmitting. ▪ This machine updates the reception capability to the address book when receiving.
1-7	**Not used**	Do not change these settings.

Switch 05		
No	**FUNCTION**	**COMMENTS**
0	Directr transmission selection to SMTP server 0: ON 1: OFF	Allows or does not allow the direct transmission to SMTP server.
1-7	Not used	Do not change these settings.

Switch 06 - Not used (do not change the settings)
Switch 07 - Not used (do not change the settings)
Switch 08 - Not used (do not change the settings)
Switch 09 - Not used (do not change the settings)

WWW.SERVICE-MANUAL.NET

4.6 SERVICE RAM ADDRESSES

CAUTION

- Do not change the settings which are marked as “Not used” or “Read only.”

680001 to 680004(H) - ROM version (Read only)

680001(H) - Revision number (BCD)

680002(H) - Year (BCD)

680003(H) - Month (BCD)

680004(H) - Day (BCD)

680006 to 680015(H) - Machine’s serial number (16 digits - ASCII)

680018(H) - Total program checksum (low)

680019(H) - Total program checksum (high)

680020 to 68003F(H) - System bit switches

680050 to 68005F(H) - Printer bit switches

680060 to 68007F(H) - Communication bit switches

680080 to 68008F(H) - G3 bit switches

680090 to 68009F(H) - G3-2 bit switches: Not used

6800A0 to 6800AF(H) - G3-3 bit switches: Not used

6800D0(H) - User parameter switch 00 (SWUER_00) : Not used

6800D1(H) - User parameter switch 01 (SWUSR_01) : Not used

6800D2(H) - User parameter switch 02 (SWUSR_02)

Bit 0: Forwarding mark printing on forwarded messages 0: Disabled, 1: Enabled

Bit 1: Center mark printing on received copies

(This switch is not printed on the user parameter list.)

0: Disabled, 1: Enabled

Bit 2: Reception time printing

(This switch is not printed on the user parameter list.)

0: Disabled, 1: Enabled

Bit 3: TSI print on received messages 0: Disabled, 1: Enabled

Bit 4: Checkered mark printing

(This switch is not printed on the user parameter list.)

0: Disabled, 1: Enabled

Bit 5: Not used

Bit 6: Not used

Bit 7: Not used

6800D3(H) - User parameter switch 03 (SWUSR_03: Automatic report printout)

Bit 0: Transmission result report (memory transmissions) 0: Off, 1: On

Bit 1: Not used

WWW.SERVICE-MANUAL.NET

Bit 2: Memory storage report 0: Off, 1: On

Bit 3: Polling reserve report (polling reception) 0: Off, 1: On

Bit 4: Polling result report (polling reception) 0: Off, 1: On

Bit 5: Transmission result report (immediate transmissions) 0: Off, 1: On

Bit 6: Not used

Bit 7: Journal 0: Off, 1: On

6800D4(H) - User parameter switch 04 (SWUSR_04: Automatic report printout)

Bit 0: Not used

Bit 1: Automatic communication failure report and transfer result report output 0: Off, 1: On

Bits 2 to 3: Not used

Bit 4: Indicates the parties 0: Not indicated, 1: Indicated

Bit 5: Include sender's name on reports 0: Off, 1: On

Bit 6: Not used

Bit 7: Inclusion of a sample image on reports 0: Off, 1: On

6800D5(H) - User parameter switch 05 (SWUSR_05)

Bit 0: Substitute reception when the base copier is in an SC condition

0: Enabled, 1: Disabled

Bits 1 and 2: Condition for substitute rx when the machine cannot print messages (Paper end, toner end, jam, and during night mode)

Bit 2: 0, Bit 1: 0 = The machine receives all the fax messages.

Bit 2: 0, Bit 1: 1 = The machine receives the fax messages with RTI or CSI.

Bit 2: 1, Bit 1: 0 = The machine receives the fax messages with the same ID code.

Bit 2: 1, Bit 1: 1 = The machine does not receive anything.

Bit 3: Not used

Bit 4: Not used

Bit 5: Just size printing 0: Off, 1: On

Bit 6: Not used

Bit 7: Add paper display when a cassette is empty 0: Off, 1: On

6800D6(H) - User parameter switch 06 (SWUSR_06): Not used

6800D7(H) - User parameter switch 07 (SWUSR_07)

Bit 0 Ringing 0: Off, 1: On

Bit1: Automatic answering message 0: Off, 1: On

Bit 2: Parallel memory transmission 0: Off, 1: On

Bits 3 and 4: Not used

Bit 5: Remote control 0: Off, 1: On

Bits 6 and 7: Not used

6800D8(H) - User parameter switch 08 (SWUSR_08)

Bits 0 and 1: Not used.

WWW.SERVICE-MANUAL.NET

Bit 2: Authorized reception

0: Only faxes from senders whose RTIs/CSIs are specified for this feature are accepted.

1: Only faxes from senders whose RTIs/CSIs are not specified for this feature are accepted.

Bits 3 to 7: Not used.

6800D9(H) - User parameter switch 09 (SWUSR_09): Not used

6800DA(H) - User parameter switch 10 (SWUSR_0A)

Bits 0 to 2: Not used

Bit 3: Page reduction 0: Off, 1: On

Bits 4 and 5: Not used

Bit 6: Use both e-mail notification and printed reports to confirm the transmission results 0: Off, 1: On

Bit 7: Not used

6800DB(H) - User parameter switch 11 (SWUSR_0B)

Bits 0 and 1: Not used

Bit 2: White original detection 0: Off, 1: On (alarm and alert message on the LCD)

Bit 3: Receive rejection for 1300 Hz transmission 0: Off (receive), 1: On (not receive)

Bit 5: Not used

Bit 6: Printout of messages received while acting as a forwarding station 0: Off, 1: On

Bit 7: Not used

6800DC(H) - User parameter switch 12 (SWUSR_0C): Not used

6800DD(H) - User parameter switch 13 (SWUSR_0D): Not used

6800DE(H) - User parameter switch 14 (SWUSR_0E)

Bit 0: Message printout while the machine is in Night Printing mode 0: On, 1: Off

Bit 1: Maximum document length detection 0: Double letter, 1: Longer than double-letter (well log) – up to 1,200 mm

Bit 2: Not used

Bit 3: Fax mode settings, such as resolution, before a mode key (Copy/Fax/Printer/Scanner) is pressed 0: Not cleared, 1: Cleared

Bits 4 to 6: Not used

Bit 7: Not used

6800DF(H) - User parameter switch 15 (SWUSR_0F)

(This switch is not printed on the user parameter list.)

Bits 0, 1 and 2: Cassette for fax printout

Bit 2: 0, Bit 1: 0, Bit 0: 1 = 1st paper feed station

Bit 2: 0, Bit 1: 1, Bit 0: 0 = 2nd paper feed station

Bit 2: 0, Bit 1: 1, Bit 0: 1 = 3rd paper feed station

Bit 2: 1, Bit 1: 0, Bit 0: 0 = 4th paper feed station

Bit 2: 1, Bit 1: 0, Bit 0: 1 = LCT

WWW.SERVICE-MANUAL.NET

Other settings Not used

Bits 3 and 4: Not used

Bit 5: Using the cassette specified by bits 0, 1 and 2 above only 0: On, 1: Off

Bits 6 and 7: Not used

6800E0(H) – User parameter switch 16 (SWUSR_10)

(This switch is not printed on the user parameter list.)

Bits 0 and 1: Not used

Bit 2: Paper size selection priority for an A4 size fax message when A4/LT size paper is not available. 0: A3 has priority, 1: B4 has priority

Bits 3 to 7: Not used

6800E1(H) – User parameter switch 17 (SWUSR_11)

Bit 0: Not used

Bit 1: Not used

Bit 2: Inclusion of the “Add” button when a sequence of Quick/Speed dials is selected for broadcasting 0:Not needed, 1: Needed

Bits 3 to 6: Not used

Bit 7: Press “Start” key without an original when using the on hook dial or the external telephone,

0: displays “Cannot detect original size”. 1: Receives fax messages.

6800E2(H) - User parameter switch 18 (SWUSR_12)

Bit 0: TTI date 0: Off, 1: On

Bit 1: TTI sender 0: Off, 1: On

Bit 2: TTI file number 0: Off, 1: On

Bit 3: TTI page number 0: Off, 1: On

Bits 4 to 6: Not used

Bit 7: Japan only

6800E3(H) - User parameter switch 19 (SWUSR_13)

Bit 0: Not used

Bit 1: Journal format

0: The Journal is separated into transmissions and receptions

1: The Journal is separated into G3-1, G3-2, and G3-3 communications

Bit 2: Not used

Bit 3: 90° image rotation during B5 portrait Tx (This switch is not printed on the user parameter list.) 0: Off, 1: On

Bit 4: Reduction of sample images on reports to 50% in the main scan and sub-scan directions. (This switch is not printed on the user parameter list.) 0: Technician adjustment (printer switch 0E bits 3 and 4), 1: 50% reduction

Bit 5: Use of A5 size paper for reports (This switch is not printed on the user parameter list.) 0:

WWW.SERVICE-MANUAL.NET

Off, 1: On

Bits 6 and 7: Not used

6800E4(H) - User parameter switch 20 (SWUSR_14)

Bit 0: Automatic printing of the LAN fax result report 0: Off, 1: On

Bit 1: Not used.

Bits 2 to 5: Store documents in memory which could not be printed from PC fax (LAN fax) driver

Bit 5	Bit 4	Bit 3	Bit 2	Setting
0	0	0	0	0 min.
0	0	0	1	1 min.
↓	↓	↓	↓	↓
1	1	1	0	14 min.
1	1	1	1	15 min.

Bits 6 and 7: Not used.

6800E5(H) - User parameter switch 21 (SWUSR_15)

Bit 0: Print results of sending reception notice request message 0: Disabled (print only when error occurs), 1: Enabled

Bit 1: Respond to e-mail reception acknowledgment request 0: Disabled, 1: Enabled

Bit 2: Not used

Bit 3: File format for forwarded folders 0: TIFF, 1:PDF

Bit 4: Transmit Journal by E-mail 0: Disabled, 1: Enabled

Bit 5: Not used

Bit 6: Network error display 0: Displayed, 1: Not displayed

Bit 7: Transmit error mail notification 0: Enabled, 1: Disabled

6800E6(H) - User parameter switch 22 (SWUSR_16)

(This switch is not printed on the user parameter list.)

Bit 0: Dial tone detection (PSTN 1) 0: Disabled, 1: Enabled

Bits 1 to 7: Not used

6800E7(H) – User parameter switch 23 (SWUSR_17): Not used

6800E8(H) - User parameter switch 24 (SWUSR_18): Not used

6800E9(H) - User parameter switch 25 (SWUSR_19)

Bit 0: Not used

Bit 1: Reception mode switch timer 0: Off, 1: On (switching Fax or Fax/Tel)

WWW.SERVICE-MANUAL.NET

Bit 2: Mode priority switch 0: Fax first, 1: Tel first

Bit 3: Dial in function (Japan Only)

Bit 4: RDS operation 0: Not acceptable, 1: Acceptable for the limit specified by system switch 03

Note

- This bit is only effective when RDS operation can be selected by the user (see system switch 02).

Bits 5 to 7: Not used

6800EA(H) and 6800EB(H) - User parameter switches 26 and 27 (SWUSR_1A and 1B): Not used

6800EC(H) - User parameter switch 28(SWUSR_1C)

Xxxxx

6800ED(H) - User parameter switch 29(SWUSR_1D)

xxxxxx

6800EE(H) and 6800EF(H) - User parameter switches 30 and 31 (SWUSR_1E and 1F): Not used

6800F0(H) - User parameter switch 32 (SWUSR_20)

Bit 0: Quotation priority for a destination when there is no destination of the specified type

0: Paper output priority = Priority order: 1. IP-fax destination, 2. Fax Number, 3. E-mail address, 4. Folder

1: Electric putout order = Priority order: 1. E-mail address, 2. Folder, 3. IP-fax destination, 4. Fax number

Bits 1 to 7: Not used

6800F1(H) - User parameter switch 33 (SWUSR_21): Not used

6800F2(H) - User parameter switch 34 (SWUSR_22)

Bit 0: Gatekeeper server used with IP-Fax 0: Disabled, 1: Enabled

Bit 1: SIP server used with IP-Fax 0: Disabled, 1: Enabled

Bits 2 to 7: Not used

680100 to 68010F(H) - G4 Parameter Switches – Not used

680110 to 68012F(H) - G4 Internal Switches – Not used

680130 to 68016F(H) - Service Switches

680170 to 68017F(H) - IFAX Switches

680180 to 68018F(H) - IP-FAX Switches

680190 to 6801AF(H) - Service station's fax number (SP3-101)

6801B0 to 6801B9(H) - Own fax PABX extension number

6801BA to 6801C3(H) - Own fax number (PSTN) – Not used

6801C4 to 6801D7(H) - Own fax number (ISDN G4) – Not used

6801D8 to 6801E3(H) - The first subscriber number (ISDN G3) – Not used

WWW.SERVICE-MANUAL.NET

6801E4 to 6801EF(H) - The second subscriber number (ISDN G3) – Not used

6801F0 to 6801FB(H) - The first subscriber number (ISDN G4) – Not used

6801FC to 680207(H) - The second subscriber number (ISDN G4) – Not used

680208 to 68021B(H) - PSTN-1 RTI (Max. 20 characters - ASCII) - See the following note.

68021C to 68022F(H) - PSTN-2 RTI (Max. 20 characters - ASCII) - Not used

680230 to 680246(H) - PSTN-3 RTI (Max. 20 characters - ASCII) - Not used

680247 to 680286(H) - TTI 1 (Max. 64 characters - ASCII) - See the following note.

680287 to 6802C6(H) - TTI 2 (Max. 64 characters - ASCII) - Not used

6802C7 to 680306(H) - TTI 3 (Max. 64 characters - ASCII) - Not used

680307 to 68031A(H) - PSTN-1 CSI (Max. 20 characters - ASCII)

68031B to 68032E(H) - PSTN-2 CSI (Max.20 characters - ASCII) - Not used

68032F to 680342(H) - PSTN-3 CSI (Max.20 characters - ASCII) - Not used

680343(H) - Number of PSTN-1 CSI characters (Hex)

680344(H) - Number of PSTN-2 CSI characters (Hex) - Not used

680345(H) Number of PSTN-3 CSI characters (Hex) - Not used

Note

- If the number of characters is less than the maximum (20 for RTI, 32 for TTI), add a stop code (00[H]) after the last character.

680380 to 680387(H) - Last power off time (Read only)

680380(H) - 01(H) - 24-hour clock, 00(H) - 12-hour clock (AM), 02(H) - 12-hour clock (PM)

680381(H) - Year (BCD)

680382(H) - Month (BCD)

680383(H) - Day (BCD)

680384(H) – Hour

680385(H) – Minute

680386(H) – Second

680387(H) - 00: Monday, 01: Tuesday, 02: Wednesday, /// , 06: Sunday

680394(H) - Optional equipment (Read only – Do not change the settings)

Bit 0: Page Memory 0: Not installed, 1: Installed

Bit 1: SAF Memory 0: Not installed, 1: Installed

Bits 2 to 7; Not used

680395(H) - Optional equipment (Read only – Do not change the settings)

Bits 0 to 3: Not used

Bit 4: G3-2 0: Not installed, 1: Installed

Bit 5: G3-3 0: Not installed, 1: Installed

Bit 6 and 7: Not used

680406 to 68040A – Option G3 board (G3-2) ROM information (Read only)

680406(H) - Suffix (BCD)

WWW.SERVICE-MANUAL.NET

680407(H) - Version (BCD)

680408(H) - Year (BCD)

680409(H) - Month (BCD)

68040A(H) - Day (BCD)

68040B to 68040F – Option G3 board (G3-3) ROM information (Read only)

68040B(H) - Suffix (BCD)

68040C(H) - Version (BCD)

68040D(H) - Year (BCD)

68040E(H) - Month (BCD)

68040F(H) - Day (BCD)

680410(H) - G3-1 Modem ROM version (Read only)

680412(H) - G3-2 Modem ROM version (Read only)

680414(H) - G3-3 Modem ROM version (Read only)

680420(H) - Number of multiple sets print (Read only)

680476(H) - Time for economy transmission (hour in 24h clock format - BCD)

680477(H) - Time for economy transmission (minute - BCD)

680492(H) - Transmission monitor volume 00 - 07(H)

680493(H) - Reception monitor volume 00 - 07(H)

680494(H) - On-hook monitor volume 00 - 07(H)

680495(H) - Dialing monitor volume 00 - 07(H)

680496(H) - Buzzer volume 00 - 07(H)

680497(H) - Beeper volume 00 - 07(H)

6804A8(H) - Machine code (Check ram 4)

68918E(H) - Gatekeeper server address - Main (Max. 128 characters - ASCII)

68920E(H) - Gatekeeper server address - Sub (Max. 128 characters - ASCII)

68928E(H) - Arias Number (Max. 128 characters - ASCII)

68930E(H) - SIP user name (Max. 128 characters - ASCII)

68938E(H) - SIP digest authentication password (Max. 128 characters - ASCII)

68940E(H) - Gateway address information (Max. 7100 characters - ASCII)

68AFCA(H) - Stand-by port number for H.232 connection

68AFCCH) - Stand-by port number for SIP connection

68AFCE(H) - RAS port number

68AFD0(H) - Gatekeeper port number

68AFD2(H) - Port number of data waiting for T.38

68AFD4(H) - Port number of SIP server

68AFD6(H) - Priority for SIP and H.323 0: H.323, 1: SIP

68AFD7(H) - SIP function 0: Disabled, 1: Enabled

68AFD8(H) - H.323 function 0: Disabled, 1: Enabled

WWW.SERVICE-MANUAL.NET

68AFD9(H) - SIP digest authentication function 0: Disabled, 1: Enabled

68AFDA(H) - IP-Fax backup data 00 - 600 (H) - Not used

69ED6A(H) to 69ED92(H) - SIP server address (Read only)

69ED6A(H) - Proxy server - Main (Max. 128 characters - ASCII)

69ED72(H) - Proxy server - Sub (Max. 128 characters - ASCII)

69ED7A(H) - Redirect server - Main (Max. 128 characters - ASCII)

69ED82(H) - Redirect server - Sub (Max. 128 characters - ASCII)

69ED8A(H) - Registrar server - Main (Max. 128 characters - ASCII)

69ED92(H) - Registrar server - Sub (Max. 128 characters - ASCII)

6BEBFE(H) - 6BEC1E (H) - Dial tone detection parameter (Max. 11 x 3 lines)

This initializes following order. [0x04, 0x40, 0x03, 0x60, 0x64, 0xf4, 0x01,0x64, 0x04, 0xc8, 0x00]

6BEBFE(H) – Dial tone detection frequency – Upper limit (High)

Defaults: NA: 06, EU: 06, ASIA: 06

6BEBFF(H) – Dial tone detection frequency – Upper Limit (Low)

Defaults: NA: 50, EU: 50, ASIA: 50

6BEC00(H) – Dial tone detection frequency – Lower Limit (High)

Defaults: NA: 03, EU: 02, ASIA: 02

6BEC01(H) – Dial tone detection frequency – Lower Limit (Low)

Defaults: NA: 60, EU: 90, ASIA: 90

6BEC02(H) –Dial tone detection waiting time (20 ms)

Defaults: NA: 64, EU 64, ASIA: 64

6BEC03 to 6BEC04 – Dial tone detection monitoring time (20 ms)

Defaults

Area	6BEC03	6BEC04
NA	F4	01
EU	F4	01
ASIA	F4	01

6BEC05(H) – Dial tone detect judge time (20 ms)

Defaults: NA: 64, EU: 1B, ASIA: 32

6BEC06(H) – Dial tone disconnect permission time (20 ms)

Defaults: NA: 11, EU: 0F, ASIA: 11

WWW.SERVICE-MANUAL.NET

5. SPECIFICATIONS

5.1 GENERAL SPECIFICATIONS

5.1.1 FCU

Type:	Desktop type transceiver
Circuit:	PSTN (max. 3ch.) PABX
Connection:	Direct couple
Original Size:	Book (Face down) Maximum Length: 432 mm [17 ins] Maximum Width: 297 mm [11.7 ins] ARDF (Face up) (Single-sided document) Length: 128 - 1200 mm [5.0 - 47.2 ins] Width: 105 - 297 mm [4.1 - 11.7 inch] (Double-sided document) Length: 128 - 432 mm [5.0 - 17 inch] Width: 105 - 297 mm [4.1 - 11.7 inch]
Scanning Method:	Flat bed, with CCD
Resolution:	G3 8 x 3.85 lines/mm (Standard) 8 x 7.7 lines/mm (Detail) 8 x 15.4 line/mm (Fine) See Note1 16 x15.4 line/mm (Super Fine) See Note 1 200 x 100 dpi (Standard) 200 x 200 dpi (Detail) 400 x 400 dpi (Super Fine) See Note 1 Note ▪ Optional Expansion Memory required
Transmission Time:	G3: 3 s at 28800 bps; Measured with G3 ECM using memory for an ITU-T #1 test document (Slerexe letter) at standard

WWW.SERVICE-MANUAL.NET

	resolution
Data Compression:	MH, MR, MMR, JBIG
Protocol:	Group 3 with ECM
Modulation:	V.34, V.33, V.17 (TCM), V.29 (QAM), V.27ter (PHM), V.8, V.21 (FM)
Data Rate:	G3: 33600/31200/28800/26400/24000/21600/ 19200/16800/14400/12000/9600/7200/4800/2400 bps Automatic fallback
I/O Rate:	With ECM: 0 ms/line Without ECM: 2.5, 5, 10, 20, or 40 ms/line
Memory Capacity:	ECM: 128 KB SAF Standard: 4 MB With optional Expansion Memory: 28 MB (4 MB+ 24 MB) Page Memory Standard: 4 MB (Print: 2 MB + Scanner: 2 MB) With optional Expansion Memory: 12 MB (4 MB + 8 MB) (Print 8 MB + Scanner: 4 MB)

WWW.SERVICE-MANUAL.NET

5.1.2 CAPABILITIES OF PROGRAMMABLE ITEMS

The following table shows the capabilities of each programmable items.

Item	Standard
Quick Dial	2000
Groups	100
Destination per Group	500
Destinations dialed from the ten-key pad overall	500
Programs	100
Auto Document	6
Communication records for Journal stored in the memory	200
Specific Senders	30

The following table shows how the capabilities of the document memory will change after the Expansion Memory are installed.

	Without the Expansion Memory	With the Expansion Memory
Memory Transmission file	400	400
Maximum number of page for memory transmission	1000	1000
Memory capacity for memory transmission (Note1)	320	2240

Note

- Measured using an ITU-T #1 test document (Slerexe letter) at the standard resolution, the auto image density mode and the Text mode.

WWW.SERVICE-MANUAL.NET

5.2 IFAX SPECIFICATIONS

Connectivity:	Local area network Ethernet 100base-Tx/10base-T IEEE802.11a/g, g (wireless LAN), 1000 Base-T
Resolution:	Main scan: 400 dpi, 200 dpi Sub scan: 400 dpi, 200 dpi, 100 dpi Note ▪ To use 400 dpi, IFAX SW01 Bit 4 must be set to “1”.
Transmission Time:	1 s (through a LAN to the server) Condition: ITU-T #1 test document (Selerexe Letter) MTF correction: OFF TTI: None Resolution: 200 x 100 dpi Communication speed: 10 Mbps Correspondent device: E-mail server Line conditions: No terminal access
Document Size:	Maximum message width is A4/LT. Note ▪ To use B4 and A3 width, IFAX SW00 Bit 1 (B4) and/or Bit 2 (A3) must be set to “1”.
E-mail File Format:	Single/multi-part MIME conversion Image: TIFF-F (MH, MR, MMR)
Protocol:	**Transmission:** SMTP, TCP/IP **Reception:** POP3, SMTP, IMAP4, TCP/IP
Data Rate:	100 Mbps(100base-Tx) 10 Mbps (10base-T)

WWW.SERVICE-MANUAL.NET

Authentication Method:	SMTP-AUTH POP before SMTP A-POP
Remark:	The machine must be set up as an e-mail client before installation. Any client PCs connected to the machine through a LAN must also be e-mail clients, or some features will not work (e.g. Autorouting).

WWW.SERVICE-MANUAL.NET

5.3 IP-FAX SPECIFICATIONS

Network:	Local Area Network Ethernet/10base-T, 100base-TX IEEE802.11a/g, g (wireless LAN), 1000 Base-T
Scan line density:	8 x 3.85 lines/mm, 200x100dpi (standard character), 8 x 7.7lines/mm, 200x200dpi (detail character), 8 x 15.4lines/mm (fine character: optional expansion memory required), 16 x 15.4lines/mm, 400x400dpi (super fine character: optional expansion memory required)
Original size:	Maximum A3 or 11"x 17" (DLT)
Maximum scanning size:	Standard: A3, 297mm x 432mm Irregular: 297mm x 1200mm
Transmission protocol:	Recommended: T.38 Annex protocol, TCP, UDP/IP communication
Compatible machines:	IP-Fax compatible machines
IP-Fax transmission function:	Specify IP address and send fax to an IP-Fax compatible fax through a network. Also capable of sending fax from a G3 fax connected to the public telephone lines via a VoIP gateway.
IP-Fax reception function:	Receive a fax sent from an IP-Fax compatible fax through a network. Also capable of receiving fax from a G3 fax connected the public telephone lines via a VoIP gateway.

WWW.SERVICE-MANUAL.NET

5.4 FAX UNIT CONFIGURATION

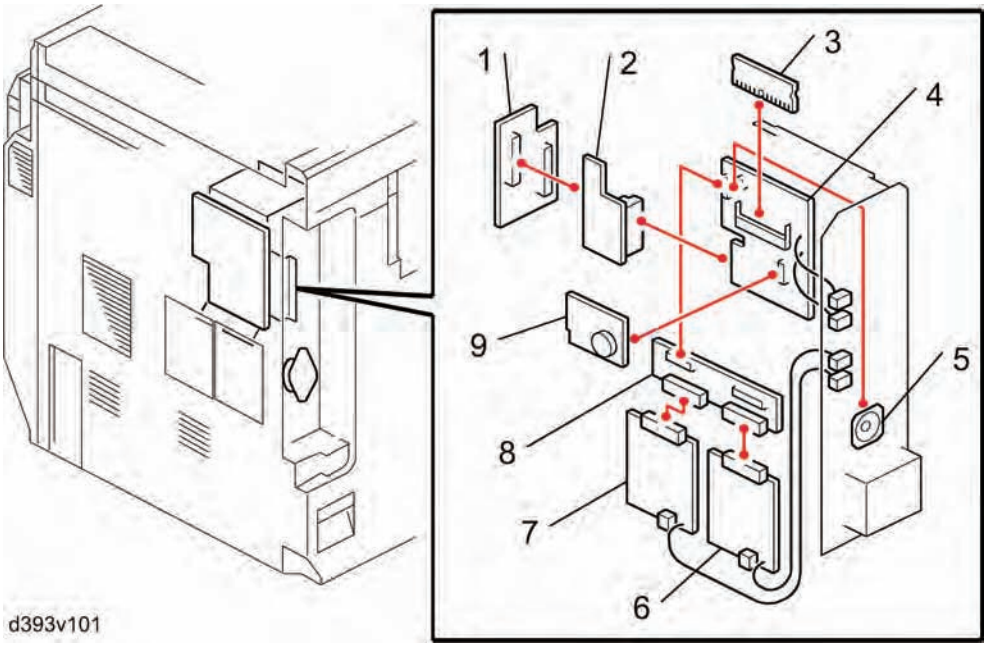

Component	Code	No.	Remarks
MBU	D545	9	Included with the fax unit
FCU		4	
FCU I/F		2	
GWFCU I/F		1	
Speaker		5	
Expansion Memory	G578	3	Optional
CCU I/F Board	D393	8	Optional
SG3 Board		6	
SG3 Board (2nd)	D393	7	Optional
Handset Type 1018	B433	-	NA only. Also used with AT/AP-C2

WWW.SERVICE-MANUAL.NET